FLENDER-COUPLINGS
CATALOG **FLE 10.7**
EDITION 2026 EN

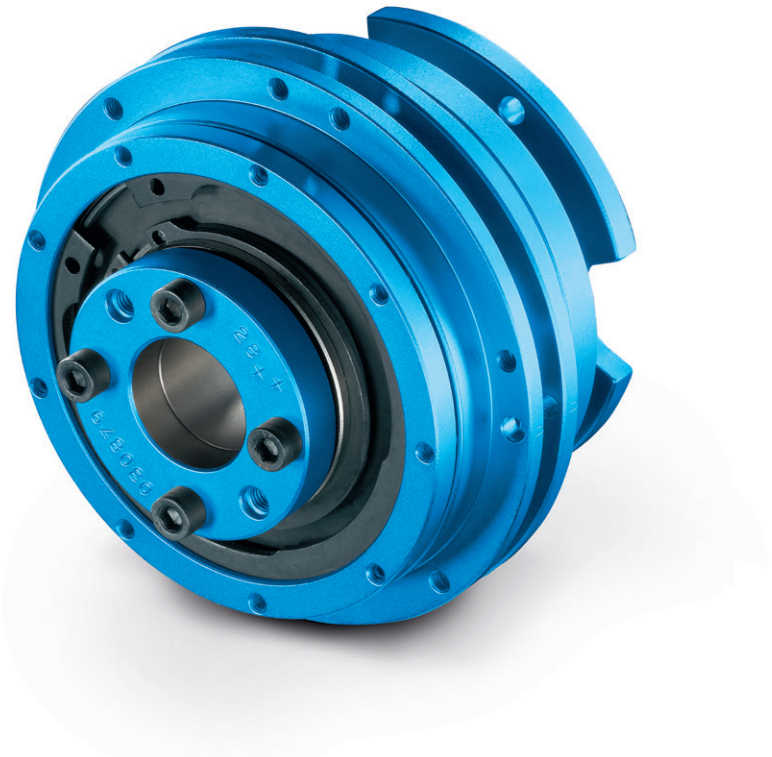

SAFETY COUPLINGS
ARPEX

flender.com

FLENDER

FLENDER

SAFETY COUPLINGS ARPEX

Catalog FLE 10.7 Edition 2026 EN

Introduction

Safety couplings

Appendix

The products and systems described in this catalog are manufactured/distributed under application of a certified quality management system in accordance with EN ISO 9001 (Certified Registration No. 01 100 000708). The certificate is recognized by all IQNet countries.

FLE 10 CATALOG GROUP

Product catalog FLE 10.1
FLEX-C10001-00-7600
Torsionally Rigid Couplings

Product catalog FLE 10.3
FLEX-C10003-00-7600
Highly Flexible Couplings

Product catalog FLE 10.2
FLEX-C10001-00-7600
Flexible Couplings

Product catalog FLE 10.4
FLEX-C10004-00-7600
Fluid Couplings

Product catalog FLE 10.5
FLEX-C10120-00-7600
High Performance Couplings

Product catalog FLE 10.7
FLEX-C10122-00-7600
Safety couplings

Product catalog FLE 10.6
FLEX-C10121-00-7600
Backlash-free couplings

INTRODUCTION

E

The mechanical drive train comprises individual units such as motor, gear unit and driven machine. The coupling connects these component assemblies.
As well as the transmission of rotary motion and torque, other requirements may be made of the coupling.

- Compensation for shaft misalignment with low restorative forces
- Control of characteristic angular vibration frequency and damping
- Interruption or limitation of torque
- Noise insulation, electrical insulation

Couplings are frequently chosen after the machines to be connected have already been selected. Thanks to a large number of different coupling assembly options, specified marginal conditions for clearance and connection geometry can be met from the standard range. The coupling also performs secondary functions, e.g. providing a brake disk or brake drum for operating or blocking brakes, devices to record speed or the attachment of sprockets or pulleys.

Couplings are divided into two main groups, couplings and clutches.

Clutches interrupt or limited the transmissible torque. The engaging and disengaging forces on externally operated clutches are introduced via a mechanically, electrically, hydraulically or pneumatically operating mechanism. Overload, centrifugal or freewheel clutches draw their engaging energy from the transmitted output.

Rigid couplings, designed as clamp, flanged or mechanism couplings, connect machines which must not undergo any shaft misalignment. Hydrodynamic couplings, often also called fluid or Föttinger couplings, are used as starting couplings in drives with high mass moments of inertia of the driven machine. In drive technology very often flexible, positive couplings, which may be designed to be torsionally rigid, torsionally flexible or highly flexible, are used.

Torsionally rigid couplings are designed to be rigid in a peripheral direction and flexible in radial and axial directions. The angle of rotation and torque are conducted through the coupling without a phase shift.

Torsionally flexible couplings have resilient elements usually manufactured from elastomer materials. Using an elastomer material with a suitable ShoreA hardness provides the most advantageous torsional stiffness and damping for the application. Shaft misalignment causes the resilient elements to deform.

Highly flexible couplings have large-volume (elastomer) resilient elements of low stiffness. The angle of rotation and torque are conducted through the coupling with a considerable phase shift.

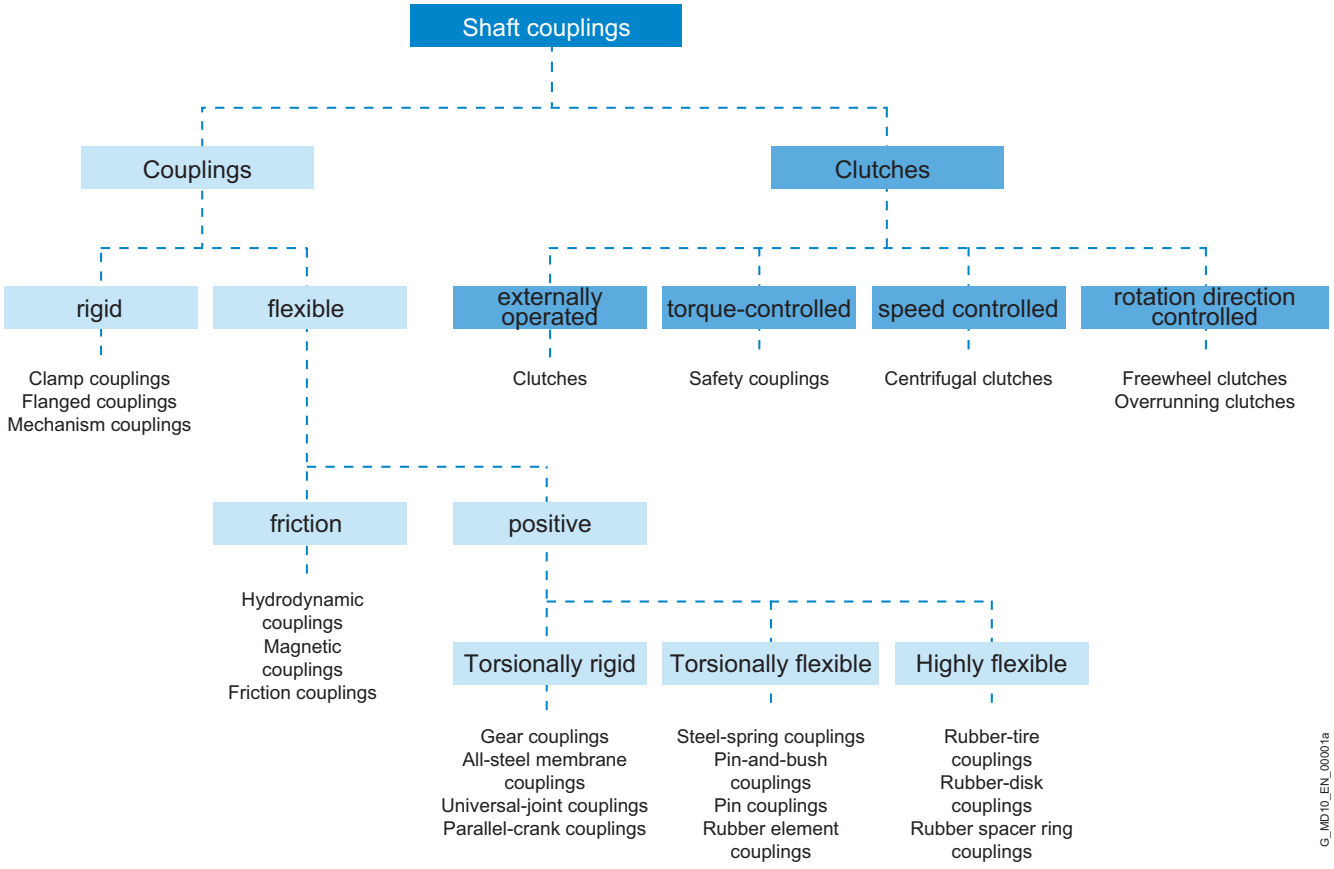
Shaft couplings
Couplings
Clutches
rigid
flexible
externally operated
torque-controlled
speed controlled
rotation direction controlled
Clamp couplings
Flanged couplings
Mechanism couplings
Clutches
Safety couplings
Centrifugal clutches
Freewheel clutches
Overrunning clutches
friction
positive
Hydrodynamic couplings
Magnetic couplings
Friction couplings
Torsionally rigid
Torsionally flexible
Highly flexible
Gear couplings
All-steel membrane couplings
Universal-joint couplings
Parallel-crank couplings
Steel-spring couplings
Pin-and-bush couplings
Pin couplings
Rubber element couplings
Rubber-tire couplings
Rubber-disk couplings
Rubber spacer ring couplings
G_MD10_EN_00001a

OUR COUPLING GROUPS AT A GLANCE

E

N-EUPEX, RUPEX and BIPEX

Flexible Couplings

Flexible Flender couplings have a wide range of possible applications. A broad standard modular system as well as specially designed application-specific couplings are available.

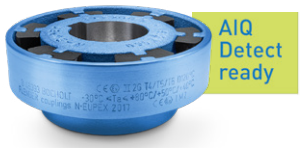

N-EUPEX
cam couplings
Rated torque:
12 Nm ... 93,500 Nm

RUPEX
pin-and-bush couplings
Rated torque:
120 Nm ... 1,690,000 Nm

BIPEX
cam couplings
Rated torque:
21 Nm ... 5,100 Nm

ELPEX, ELPEX-B and ELPEX-S

Highly Flexible Couplings

ELPEX® couplings are free of circumferential back-lash. Their damping capacity and low torsional stiff-ness make them especially well-suited for coupling machines with strongly non-uniform torque characteristics or large shaft misalignment.

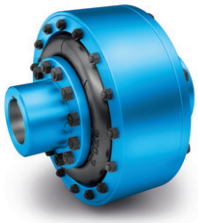

ELPEX
elastic ring couplings
Rated torque:
1,600 Nm ... 90,000 Nm

ELPEX-B
elastic tire couplings
Rated torque:
57 Nm ... 19,000 Nm

ELPEX-S
rubber disk couplings
Rated torque:
200 Nm ... 63,000 Nm

N-ZAPEX gear couplings and ARPEX all-steel couplings

Torsionally rigid couplings

For transmission of high torques, we offer both ARPEX all-steel couplings and N-ZAPEX gear couplings in a range
of versions. Their purposes of application vary according to specific requirements with respect to shaft misalignment, temperature and torque.

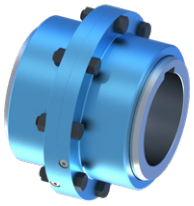

N-ZAPEX
gear couplings
Rated torque:
1,400 Nm ... 10,000,000 Nm

ARPEX
high performance
couplings
Rated torque:
1,100 Nm ... 936,000 Nm

N-ARPEX and ARPEX
all-steel couplings
Rated torque:
92 Nm ... 2,000,000 Nm

BIPEX-S and SIPEX

Backlash-free couplings

The vibration-damping, electrically insulating plug-in BIPEX-S elastomer couplings and SIPEX metal bellows couplings with very high torsional stiffness deliver especially isogonal torque transmission.

BIPEX-S and SIPEX
Rated torque:
0.1 Nm ... 5,000 Nm

FLUDEX

Hydrodynamic couplings

The FLUDEX hydrodynamic fluid coupling works according to the Föttinger principle. It functions entirely free of wear.

FLUDEX
fluid couplings
Power:
1.2 kW ... 2,500 kW

Application-specific couplings

Couplings for rail vehicles must meet high demands. Due to their high degree of standardization and wide variety, they can be used in the most diverse vehicle types.

Railway coupling
Rated torque:
1,000 Nm ... 9,500 Nm

Each wind turbine coupling is designed to optimally meet the requirements of the respective wind turbine. The coupling connects the fast-running gear shaft with the generator shaft and is available for wind turbines with a capacity of up to 12 MW.

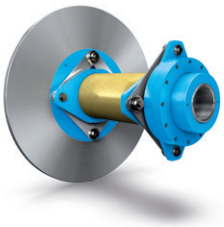

Wind turbine couplings
Rated torque:
10,000 Nm ... 60,000 Nm

AIQ DETECT

for wear detection on the N-EUPEX and RUPEX

E

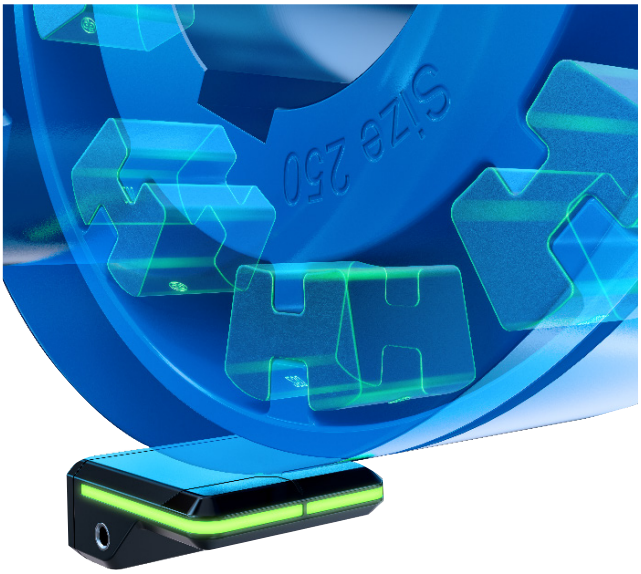

The AIQ Detect uses several Hall sensors to determine the wear on the flexible Flender couplings of the N-EUPEX and RUPEX via sensor magnets installed on the coupling side. The progressive wear of the elastomer components of the RUPEX and N-EUPEX results in a torsion angle between the coupling halves. This angle of rotation and the resulting time difference between the coupling halves make it possible to detect the degree of wear of the RUPEX and N-EUPEX flexible couplings. The speed of the coupling is also determined.

This information can be evaluated in the customer's control system via analogue and digital outputs that can be configured by the customer. The AIQ Detect also enables the wear status to be output via the built-in LED light strip on the sensor (green = the wear status is OK, yellow = the elastomer components must be replaced, red = the drive-train must be stopped). This information can also be analyzed and displayed via a Bluetooth interface with a mobile device using the AIQ app.

Benefits:

- Continuous wear monitoring
- Coupling status at a glance
- Prevents system failures = maximum operational reliability
- Supports service and maintenance personnel
- Waste reduction (replacement of elastomers only if necessary)
- No annual testing of elastomers necessary
- Flexible and easy to use

Functions:

- Detects wear on elastomers
- Speed measurement
- Remaining life forecast
- Coupling failure detection
- Configurable output signals
- Firmware upgrades via AIQ app

Coupling	Types	Size	Article No.
N-EUPEX	A, B, H	80 – 140	F2E01528467
		160 – 280	F2E01528468
		315 – 710	F2E01528469
RUPEX	RWN, RWS	105 – 1120	F2E01528472
		1250 – 2000	F2E01528473

Notes

- The AIQ Detect is used for continuous wear monitoring of Flender N-EUPEX and RUPEX couplings and can be ordered as an accessory to the coupling
- Make sure that the Flender coupling has the 'AIQ Detect-ready' status (see ordering example)

Ordering example

- N-EUPEX coupling A, size 110 with the status "AIQ Detect-ready" (Article No. addition A99)
- AIQ Detect for wear monitoring of N-EUPEX coupling A, size 110

Article No. N-EUPEX: 2LC0170-4AB99-0AA0-Z L0M+M0P+A99

Article No. AIQ Detect: F2E01528467 (according to the table)

SAFETY COUPLINGS ARPEX

General 1/3

Characteristic features 1/3
ARPEX Safety Coupling Series 1/4
Design and operation 1/5
Selection 1/7
Ordering example 1/7
State of delivery 1/7
Technical information 1/7

Series AKR 1/8

Standard design AKR with bore and keyway acc. to DIN 6885-1 1/8
Standard design AKR with clamping sleeve 1/9
Combination AKR/AR-EN Series AKR with ARPEX All-steel Coupling 1/10
Combination AKR/NE-D Series AKR with flexible N-EUPEX coupling 1/12
Combination examples with standard components of ARPEX All-steel Couplings 1/14

Series AKA 1/16

Shaft mounting design AKA with bore and keyway acc. to DIN 6885-1 1/16
Shaft mounting design AKA with clamping sleeve 1/17
Combination examples with v-belt-pulleys, timing-belt-pulleys or chain wheels 1/18
Special designs of the series AKA 1/19

Accessory 1/20

Switching device 1/20
Limit switch 1/21

GENERAL

Characteristic features

Definite disconnecting

On reaching the set disconnecting torque ARPEX torque limiters separate the coupled drive components both during slow and fast rising torques.

Complete separation

After the disengagement process the coupling halves are out of contact, so that in contrast to other torque limiter systems they come to a stop wearfree.

Degressive characteristic

When the disengagement process starts the disconnecting torque decreases immediately, due to the degressive characteristic of the plate springs.

Disconnecting process

The forces which originate from the disengagement process stay in the coupling system and are not transmitted to the coupled machines.

High repetitive accuracy

The ARPEX torque limiters have a high repetitive accuracy of the disconnecting torque even after many disengagement processes. The repetition accuracy is ±10 %.

Reference points

Due to the spline geometry and by reference point markings, the coupling is always re-engaged in the same position.

Backlash-free torque transmission

The spline system, machined to close tolerances, transmits torque positively and without backlash.

High quality

All components of the ARPEX torque limiter are manufactured of high quality steel. This results in a compact, rugged design which guarantees a long working life with a high degree of operational safety.

Ambient temperature

The couplings can be used in ambient temperatures from –30 °C bis + 80 °C.

Life lubrication

The bearings are lubricated for life.

Smooth operation

ARPEX coupling components are machined to very close tolerances. Therefore, at speed, the assembled coupling imparts very small forces on the connected drive components.

The design and manufacture of ARPEX couplings is integrated into a certified Quality Management System according to **DIN EN ISO 9001** to fulfil the high quality demands on ARPEX couplings.

GENERAL

ARPEX Safety Coupling Series

ARPEX torque limiters are used for all drive purposes where, for modern, high-grade and ever more expensive machines, a reliable protection in the case of overload is required.

The use of ARPEX torque limiters in plants avoids long periods of standstill and repairs caused by overload-defects. The economic efficiency of the plant is maintained.

In case of overload, ARPEX torque limiters disconnect the drive within the shortest time possible. Due to that fact operators and machines are protected.

ARPEX torque limiters are available in fourteen sizes for torques from 13 Nm to 65 000 Nm (higher disconnecting torques on request).

You can select two types of couplings:

Standard design AKR

For combinations with standard components from the ARPEX- and N-EUPEX-programme
see page 1/14

Shaft mounting design AKA

For combinations with various specific drive media as belt-pulleys or chain wheels
see page 1/18

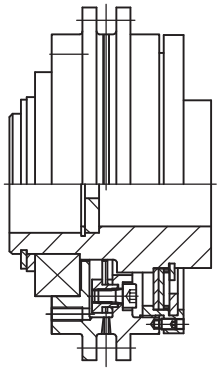

Series AKR

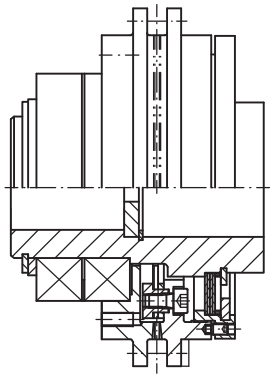

Series AKA

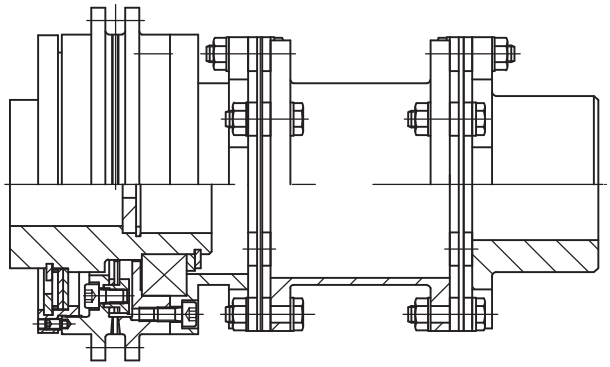

Series AKR/ARPEX

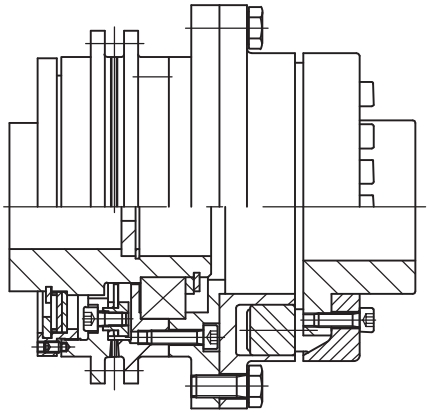

Series AKR/N-EUPEX

Design and operation

ARPEX torque limiters work with close fitting and positively engaged splines.

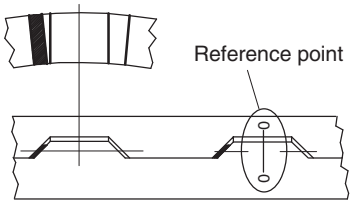

During normal operation of the machines the splines are kept in engagement by the spring tension of the plate springs, and so the torque *T* is transmitted from the hub over the disc pack to the indexing rings

In the case of overload the indexing rings turn relative to each other and press the splines out of engagement. At a defined point of the contact ratio the plate springs jump into a negative position. The splines are no longer in gear, the indexing rings have no contact and the torque transmission is interrupted.

Thus the coupling halves are out of contact after the disengagement process, they are wear-free. Due to the fact that the plate springs jump into a negative position the torque limiter will not re-engage by itself.

Engaged coupling

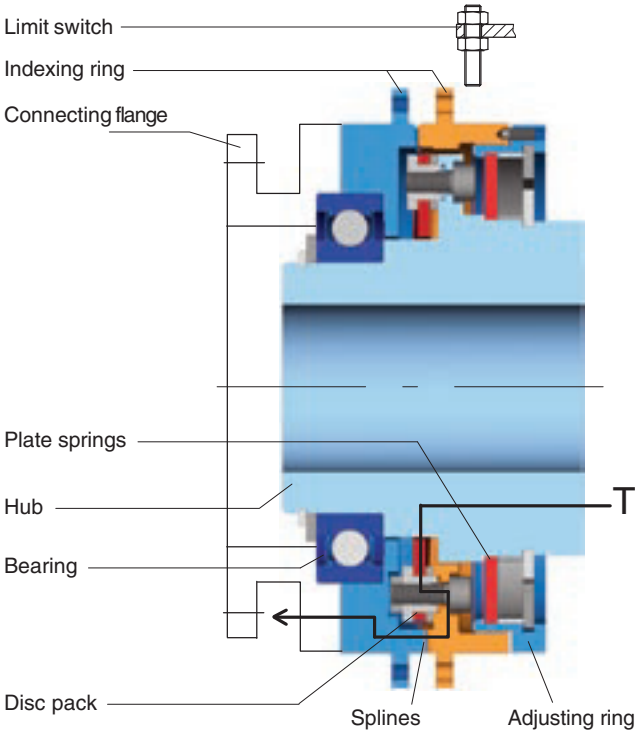

Disengaged coupling

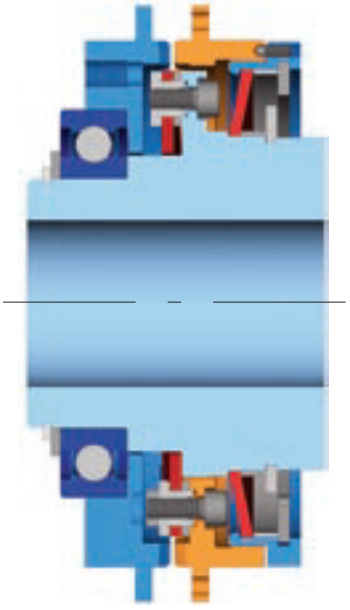

GENERAL

Disconnecting at slow and fast rising torque

The disc pack allows the axial movement during the disengagement process and effects that the forces which originate from this process stay in the system of the torque limiter and are not transmitted to the coupled machines.

Due to their degressive characteristic, the disconnecting torque of the plate springs decreases immediately when the disengagement process starts.

The disconnecting torque is adjusted at the factory according to the customer's specification. The axial movement of the indexing ring can be used to actuate a limit switch, which switches off the machine.

The torque limiter can only be re-engaged when the plant is stationary. By the geometry of the splines it is guaranteed, that the indexing rings can only be engaged in one position.

Fixed point markings on the circumference, offset at 120°, will ease re-engagement; they have to locate one above the other on re-engagement.

The splines are engaged again by moving the disengaged coupling half back by either mechanical, pneumatic or hydraulic means.

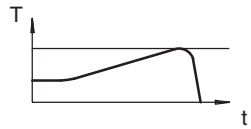

Slow rising torque

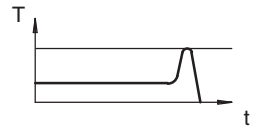

Fast rising torque

Selection

The disconnecting torque of the torque limiter should be at least 120% of the maximum torque occurring in the plant. Peak torques, as they for instance occur during start-up of a plant, should be considered.

Thus the disconnecting torque is calculated by the term:

$T_A = 1{,}2 \cdot T_{max}$

The nominal torque of the assigned couplings (ARPEX/ ARS-6, N-EUPEX) guarantees the operation of the plant even when the torque limiter is adjusted to the maximum disconnecting torque.

The permitted shaft misalignments can be drawn from the coupling catalogs of the ARPEX ARS-6 and N-EUPEX series.

Ordering example

When ordering a torque limiter or a torque limiter combination, the **disconnecting torque** must be specified for each coupling-design, since it is adjusted at the factory.

State of delivery

ARPEX torque limiters are supplied ready for assembly with the disconnecting torque – as per customer's specification – set.

Additional parts (ARPEX, N-EUPEX or RUPEX) are supplied as unassembled items.

Technical information

- Change of dimensions and technical details are possible due to further developments.
- Rotating machine elements must be protected by the purchaser to prevent accidental contact.
- For installation and putting into operation, observe the respective operating instructions which are supplied with each coupling.
- Refrain from heating above +80 °C, because the working life of the bearing could be influenced negatively.
- Great flywheel masses (e.g. pulleys to actuate a limit switch) may only be flanged after consulting the manufacturer.

1

STANDARD DESIGN AKR

with bore and keyway acc. to DIN 6885-1

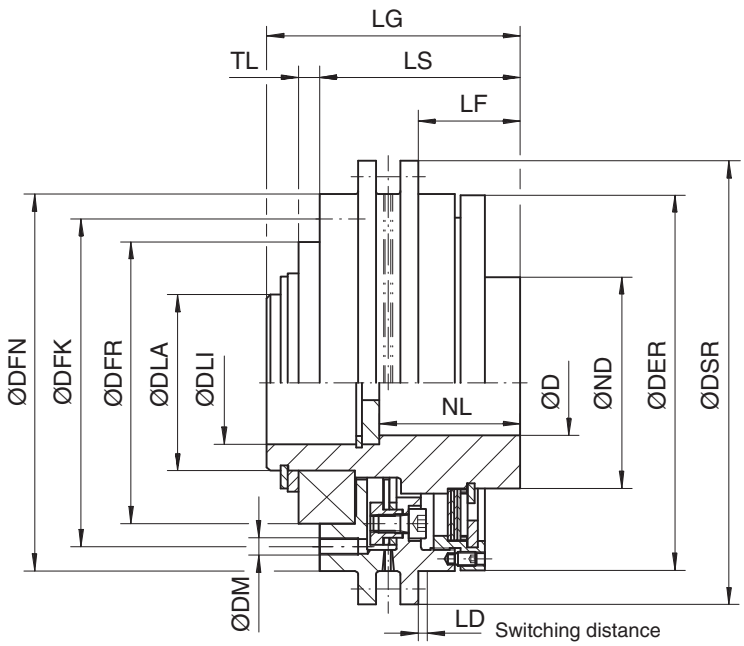

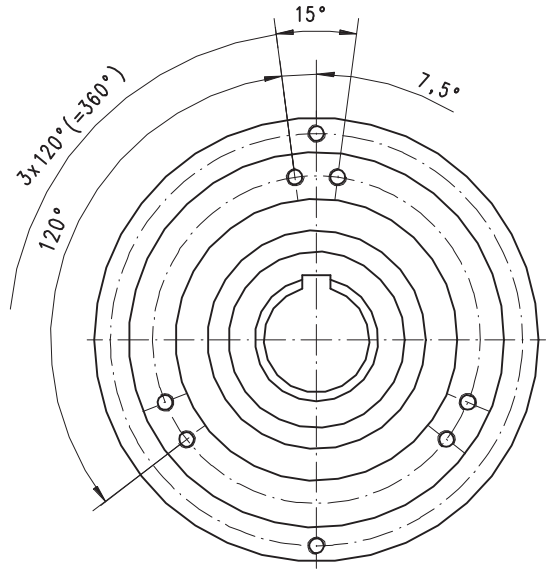

Size	Disconnecting torque $T_{A\,min}$	$T_{A\,max}$ [1]	Speed n_{max}	Dimensions in mm D	NL	ND	DER	DSR	DFN	DFR [2] h5	DLA	DLI	DFK	DM	LG	LS	LF	TL ±0,05	LD	Moment of inertia J	Weight m
	Nm	Nm	rpm	max.																kgm²	kg
02	**60**	**200**	5000	**35**	40	60	107	126	107	80	50	38	93	M5	72	57	29	6	2,6	0,006	3,5
03	**150**	**380**	4500	**42**	45	70	118	140	118	90	55	45	104	M6	76	61	31	6	2,8	0,010	4,7
04	**280**	**750**	3600	**50**	55	95	146	170	146	110	70	55	128	M8	93	76	42	7	3,2	0,028	8,6
05	**260**	**970**	3200	**60**	65	100	161	185	161	125	80	65	143	M8	98	78	43	8	3,5	0,043	10,8
06	**550**	**1500**	2800	**65**	70	120	190	215	190	140	90	70	166	M10	107	86	47	9	3,8	0,087	16,6
07	**1000**	**2500**	2600	**75**	80	130	204	235	204	150	100	80	178	M12	120	98	56	9	4,0	0,136	21,5
08	**1800**	**3500**	2600	**80**	90	140	227	260	227	170	110	85	198	M12	136	112	66	10	4,6	0,227	29,7
09	**2200**	**5200**	2400	**85**	100	150	239	275	239	170	110	90	207	M16	142	118	69	10	5,0	0,309	35,6
10	**3600**	**10000**	1700	**110**	120	190	310	350	310	225	150	115	267	M20	175	148	80	12	5,5	1,048	73,4
11	**9000**	**25000**	2200	**160**	160	257	410	470	410	180	120	80	290	M24	318	220	117	14	6,5	3,580	165
12	**17000**	**38000**	2200	**200**	200	312	475	530	475	180	120	80	235	M24	348	305	144	9	7,5	8,520	285
13	**29000**	**65000**	1800	**220**	220	320	540	620	540	210	140	100	280	M24	416	375	175	8	8,0	13,100	324

Notes

- Design for flange mounting of other coupling parts.
- Axially secured by an end plate.
- Weights and moments of inertia apply to couplings with maximum diameter D.

Ordering example

- Hub AKR
- Bore Ø 60 H7, keyway to DIN 6885-1 with set screw
- Coupling to be dynamically balanced to quality G 6.3, n = 1450 rpm with reference to DIN ISO 1940 part 1
- Disconnecting torque T_A = 1300 Nm

AKR 06

[1] Higher disconnecting torques on request.

[2] The bore of the flanged component should have the fit N7.

In order to determine the article number with additional ordering options, please contact your Flender contact person: see **flender.com**.

STANDARD DESIGN AKR

with clamping sleeve

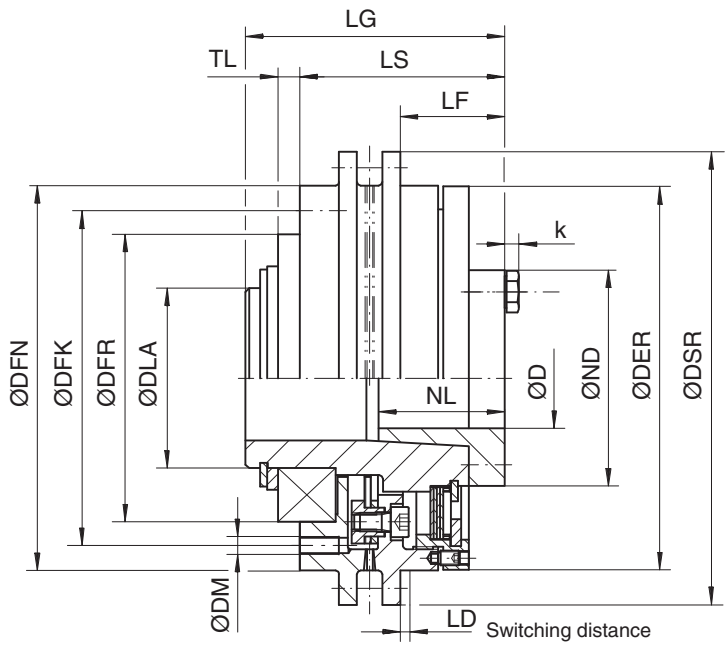

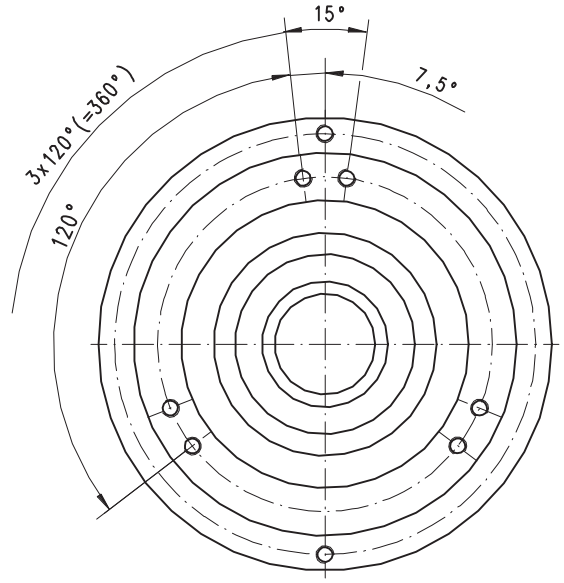

Size	Disconnecting torque $T_{A\,min}$ Nm	$T_{A\,max}$ [1] Nm	Speed n_{max} rpm	Dimensions in mm D max.	NL	ND	DER	DSR	DFN	DFR [2] h5	DLA	k	DFK	DM	LG [3]	LS	LF	TL ±0,05	LD	Moment of inertia J kgm²	Weight m kg
02	**60**	**200**	5000	**35**	35	60	107	126	107	80	50	4	93	M5	72	57	29	6	2,6	0,006	3,6
03	**150**	**380**	4500	**42**	40	70	118	140	118	90	55	4	104	M6	76	61	31	6	2,8	0,010	4,7
04	**280**	**750**	3600	**50**	45	95	146	170	146	110	70	5,3	128	M8	93	76	42	7	3,2	0,027	8,2
05	**260**	**970**	3200	**60**	50	100	161	185	161	125	80	5,3	143	M8	98	78	43	8	3,5	0,043	10,5
06	**550**	**1500**	2800	**65**	55	120	190	215	190	140	90	5,3	166	M10	107	86	47	9	3,8	0,087	16,0
07	**1000**	**2500**	2600	**75**	65	130	204	235	204	150	100	6,4	178	M12	120	98	56	9	4,0	0,136	21,0
08	**1800**	**3500**	2600	**80**	75	140	227	260	227	170	110	6,4	198	M12	136	112	66	10	4,6	0,226	28,6
09	**2200**	**5200**	2400	**85**	80	150	239	275	239	170	110	7,5	207	M16	142	118	69	10	5,0	0,308	34,3
10	**3600**	**10000**	1700	**110**	100	190	310	350	310	225	150	7,5	267	M20	175	148	80	12	5,5	1,044	71,3
11	**9000**	**25000**	1450	**160**	150	257	410	470	410	180	120	10,0	290	M24	318	220	117	14	6,5	3,572	161
12	**17000**	**38000**	1200	**200**	190	312	475	530	475	180	120	12,5	235	M24	348	305	144	9	7,5	8,301	278
13	**29000**	**65000**	1100	**220**	200	320	540	620	540	210	140	12,5	280	M24	416	375	175	8	8,0	13,060	305

Notes

- Design for flange mounting of other coupling parts.
- Weights and moments of inertia apply to couplings with maximum diameter D.

Ordering example

- Hub AKR with clamping sleeve
- Bore for shaft diameter Ø 60 h6
- Coupling to be dynamically balanced to quality G 6.3, n = 1450 rpm with reference to DIN ISO 1940 part 1
- Disconnecting torque T_A = 1300 Nm

AKR 06 with clamping sleeve

[1] Higher disconnecting torques on request.

[2] The bore of the flanged component should have the fit N7.

[3] Dimension LG results after tightening of the clamp connection.

In order to determine the article number with additional ordering options, please contact your Flender contact person: see **flender.com**.

1

COMBINATION AKR/AR-EN

Series AKR with ARPEX All-steel Coupling

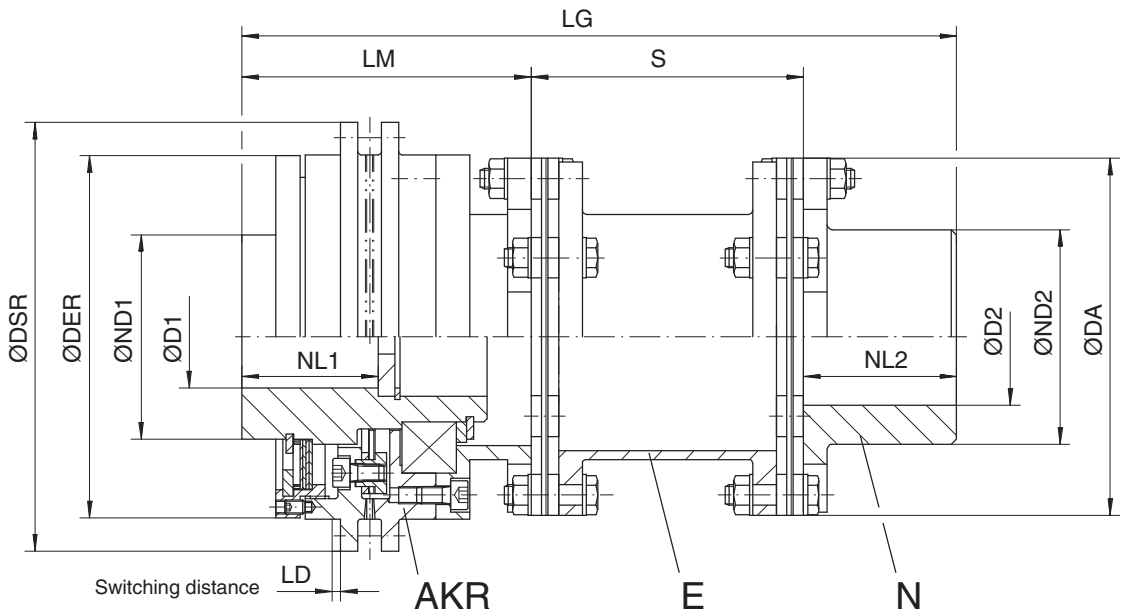

Torque limiter				ARPEX ARS-6		Dimensions in mm													Moment of inertia	Weight
Size	Disconnecting torque		Speed	Size	Rated coupling torque	Bore with keyway to DIN 6885-1														
	$T_{A\,min}$ Nm	$T_{A\,max}$ [1] Nm	n_{max} rpm		T_{KN} Nm	D1 max.	D2 max.	DA	ND1	ND2	NL1	NL2	DER	DSR	LM	S	LD	LG	J kgm²	m kg
02	60	200	5000	105-6	270	35	45	105	60	63	40	45	107	126	85	80	2,6	210	0,011	6
03	150	380	4500	125-6	490	42	55	125	70	76	45	55	118	140	92	96	2,8	243	0,020	9
04	280	750	3600	140-6	700	50	65	140	95	91	55	65	146	170	110	116	3,2	291	0,045	14
05	260	970	3200	165-6	1250	60	75	165	100	105	65	75	161	185	115	136	3,5	326	0,077	19
06	550	1500	2800	175-6	2000	65	80	175	120	110	70	80	190	215	130	142	3,8	352	0,144	28
07	1000	2500	2600	195-6	3000	75	90	195	130	120	80	80	204	235	150	142	4,0	372	0,225	36
08	1800	3500	2600	210-6	4400	80	95	210	140	126	90	90	227	260	170	160	4,6	420	0,371	50
09	2200	5200	2400	240-6	5700	85	110	240	150	145	100	100	239	275	185	176	5,0	461	0,567	64
10	3600	10000	1700	280-6	10000	110	135	280	190	184	120	130	310	350	255	232	5,5	617	1,736	129
11	9000	25000	1450	372-6	24000	160	165	372	257	225	160	160	410	470	320	280	6,5	760	5,214	301
12	17000	38000	1200	407-6	34000	200	185	407	312	250	200	175	475	530	350	306	7,5	831	10,800	399
13	29000	65000	1100	522-6	69000	220	240	522	320	325	220	230	540	620	420	400	8,0	1050	21,157	594

[1] Higher disconnecting torques on request

Notes

- Combination of torque limiter and torsionally stiff all-steel coupling to connect two shaft ends, type AKR/AR-EN.
- Design with bore and parallel keyway (with clamping hub also possible).
- E-spacer radial freely removable; with fixed shaft distances (for variable shaft distances H-spacer, AKR/AR-HN).
- Combination of torque limiter with all other hubs, spacers and flanges of the ARS-6-series is possible (**see page 1/14**).
- Weights and moments of inertia for coupling with maximum finish bores.

Ordering example

- Hub AKR, size 04
  bore Ø 50 G7, keyway to DIN 6885-1 with set screw
- Hub N, size 140-6
  bore Ø 60 H7, keyway to DIN 6885-1 with set screw
- Coupling components to be dynamically balanced to quality G 6.3, n = 1450 rpm with reference to DIN ISO 1940 part 1
- Hub AKR to be balanced after key seating,
  Hub N to be balanced before key seating
- Drive E-motor, P = 60 kW, n = 1450 rpm,
  Disconnecting torque T_A = 500 Nm

AKR 04/AR – EN 140-6

In order to determine the article number with additional ordering options, please contact your Flender contact person: see **flender.com**.

1

COMBINATION AKR/NE-D

Series AKR with flexible N-EUPEX coupling

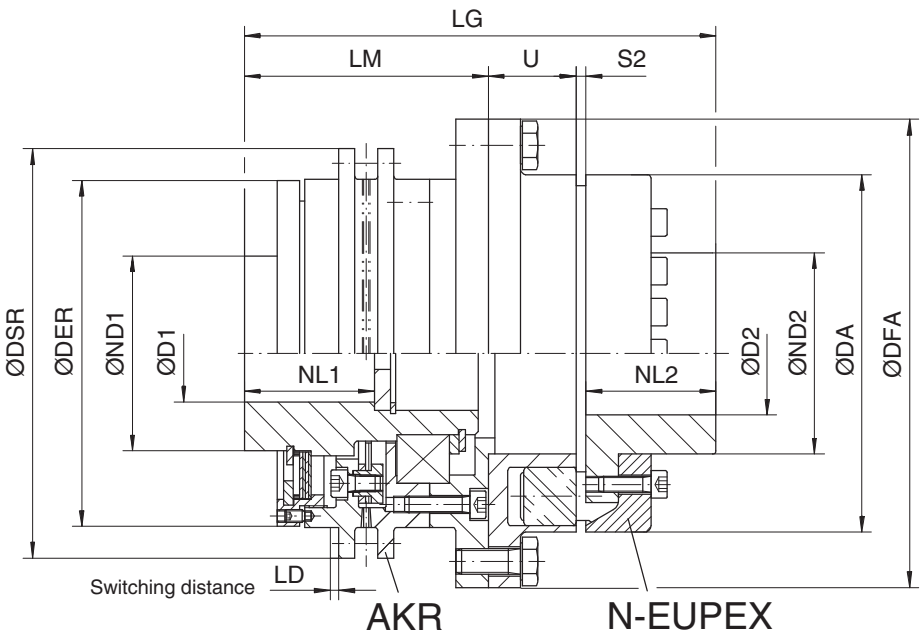

Torque limiter				N-EUPEX			Dimensions in mm															Moment of inertia	Weight
Size	Disconnecting torque		Speed	Type	Size	Rated coupling torque	Bore with keyway to DIN 6885-1																
	$T_{A\,min}$ Nm	$T_{A\,max}$ [1] Nm	n_{max} rpm			T_{KN} Nm	D1 max.	D2 max.	DA	ND1	ND2	NL1	NL2	DFA h8	DER	DSR	LM	U	S2	LD	LG	J kgm²	m kg
02	60	200	5000	E	110	225	35	55	110	60	86	40	40	144	107	126	75	27	2 ... 4	2,6	144 ... 146	0,014	7
				D				45			61											0,014	7
03	150	380	4500	E	140	500	42	65	140	70	100	45	55	180	118	140	80	34	2 ... 4	2,8	171 ... 173	0,04	12
				D				60			82											0,04	12
04	280	750	3600	E	160	840	50	70	160	95	108	55	60	200	146	170	95	39	2 ... 6	3,2	196 ... 200	0,074	18
				D				70			95											0,077	18
05	260	970	3200	E	180	1250	60	80	180	100	125	65	70	220	161	185	100	42	2 ... 6	3,5	214 ... 218	0,116	24,5
				D				80			108											0,119	24
06	550	1500	2800	E	200	1950	65	90	200	120	140	70	80	248	190	215	110	47	2 ... 6	3,8	239 ... 243	0,233	37
				D				90			122											0,233	36
07	1000	2500	2600	E	225	2300	75	100	225	130	150	80	90	274	204	235	120	52	2 ... 6	4	264 ... 268	0,36	44
				D				100			138											0,37	44
08	1800	3500	2600	E	250	3900	80	110	250	140	165	90	100	314	227	260	140	60	3 ... 8	4,6	303 ... 308	0,648	61
				D				115			155											0,668	63
09	2200	5200	2400	E	280	5500	85	120	280	150	180	100	110	344	239	275	145	65	3 ... 8	5	323 ... 328	0,92	77
				D				125			172											0,94	78
10	3600	10000	1700	D	350	10800	110	165	350	190	230	120	140	430	310	350	185	74	3 ... 8	5,5	402 ... 407	3,06	163
11	9000	25000	1450	D	520	32400	160	225	520	257	315	160	210	615	410	470	320	102	5 ... 10	6,5	637 ... 642	7,1	545
12	17000	38000	1200	on request																			
13	29000	65000	1100																				

[1] Higher disconnecting torques on request

Notes

- Combination of torque limiter and flexible N-EUPEX-coupling to connect two shaft ends.
- Design torque limiter with bore and parallel keyway (design with clamping sleeve also possible).
- N-EUPEX: type D in three parts or type E in two parts (**see catalog FLE 10.2**)
- Type D enables shafts and machines to be separated without axial displacement. Type E at larger bore diameteres D1
- Weights and moments of inertia for coupling with maximum finish bores.

Ordering example

- Hub AKR, size 04
  bore Ø 50 G7, keyway to DIN 6885-1 with set screw
- N-EUPEX-coupling size 160, type D
  bore Ø 45 H7, keyway to DIN 6885-1 with set screw
- Coupling components to be dynamically balanced to quality G 6.3, n = 1450 rpm with reference to DIN ISO 1940 part 1
- Hub AKR to be balanced after key seating
- Drive E-motor, P = 60 kW, n = 1450 rpm,
  Disconnecting torque T_A = 500 Nm

AKR 04/NE – D160

In order to determine the article number with additional ordering options, please contact your Flender contact person: see **flender.com**.

COMBINATION EXAMPLES

with standard components of ARPEX All-steel Couplings

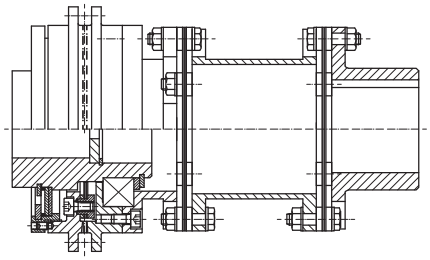

Type AKR/AR-EN

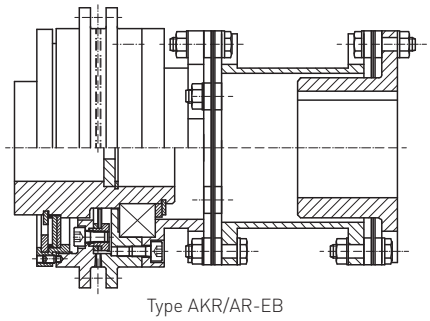

Type AKR/AR-EB

- Standard type with fixed shaft distance dimension
- Machined all-over
- N-hub is reversible (B-hub)

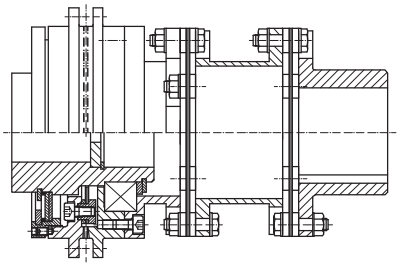

Type AKR/AR-ON

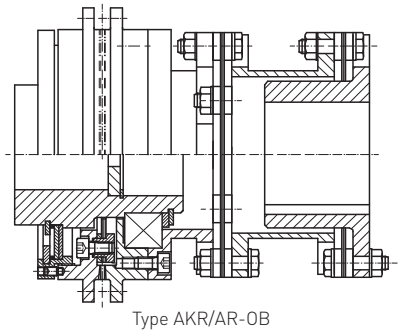

Type AKR/AR-OB

- Standard type with fixed shaft distance dimension
- Machined all-over
- N-hub is reversible (B-hub)
- Shortest possible spacer

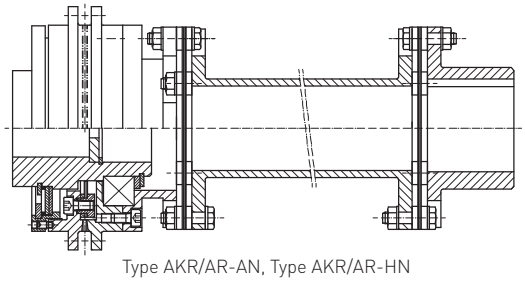

Type AKR/AR-AN, Type AKR/AR-HN

- H-spacer: Standard type with variable shaft distance dimension
- Great shaft distances are possible
- Spacer as welded construction
- A-spacer with fixed shaft distance dimension

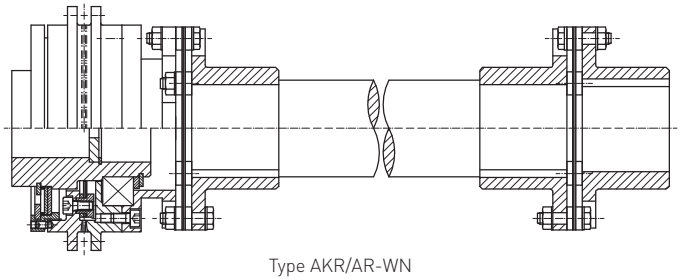

Type AKR/AR-WN

- Connection of two half couplings with a solid shaft

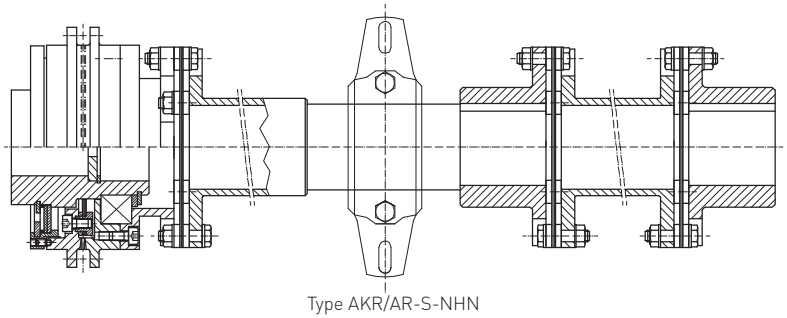

Type AKR/AR-S-NHN

- This type is used to bridge large shaft distances. The S-intermediate shaft has to be radially supported by a pedestal bearing.

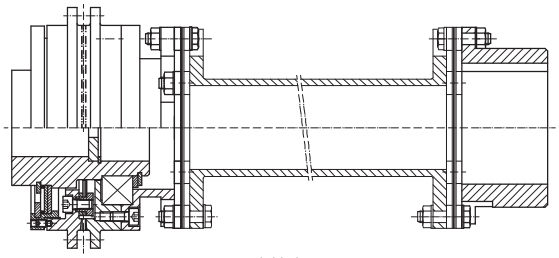

J-Hub

- J-hub,application on large shaft diameters
- J-hub is not reversible

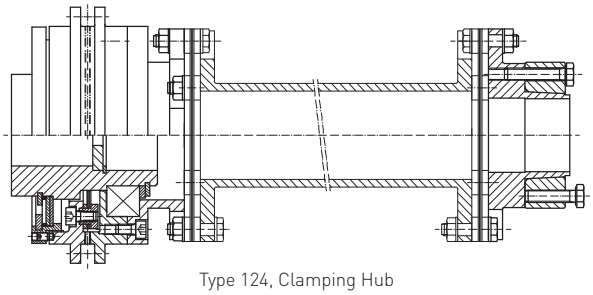

Type 124, Clamping Hub

- Torque transmission by flexible clamp connection
- Without parallel key

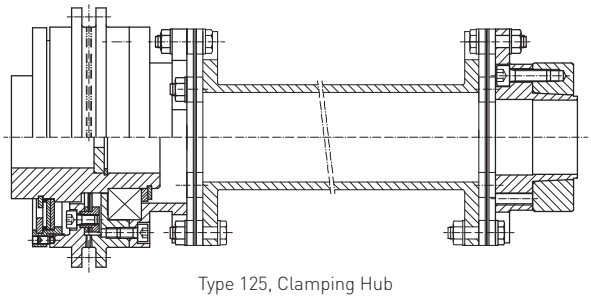

Type 125, Clamping Hub

- Torque transmission by flexible clamp connection
- Without parallel key

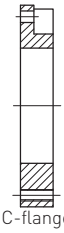

C-flange

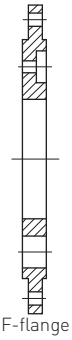

F-flange

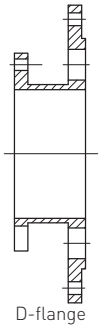

D-flange

- Standard flanges can be used depending on type of machines to be connected

Hinweise

- On request it is possible to supply dimension sheets for all combination examples of the torque limiter and the ARS-6 series.
- The size assignment of torque limiter and ARS-6-coupling should be the same as for the combination AKR/AR-EN (**page 1/10**)

1

SHAFT MOUNTING DESIGN AKA

with bore and keyway acc. to DIN 6885-1

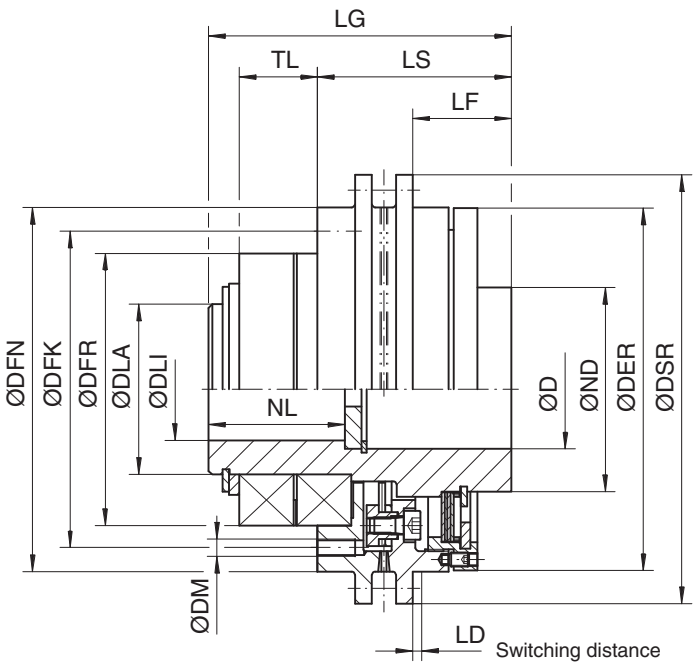

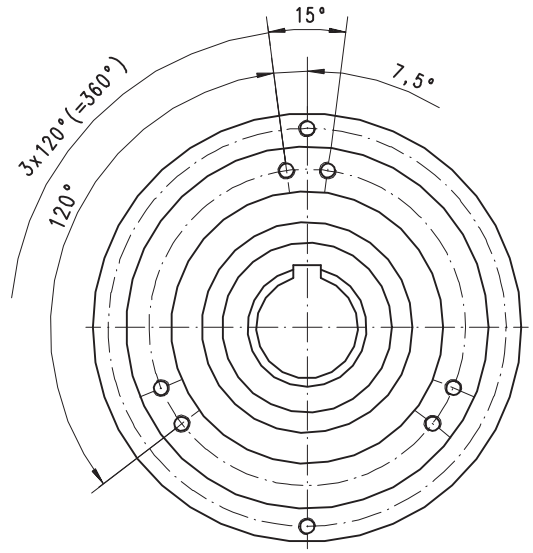

Shaft connection also possible from right hand side (see AKR)

Size	Disconnecting torque		Speed	Dimensions in mm																Moment of inertia	Weight
	$T_{A\,min}$	$T_{A\,max}$ [1]	n_{max}	DLI	D	ND	NL	DFR [2] h5	DER	DSR	DFN	DLA	DFK	DM	LS	LF	TL ±0,05	LD	LG	J	m
	Nm	Nm	rpm	max.																kgm²	kg
02	**60**	**200**	5000	**35**	38	60	40	80	107	126	107	50	93	M5	57	29	23	2,6	89	0,007	3,9
03	**150**	**380**	4500	**42**	45	70	45	90	118	140	118	55	104	M6	61	31	25	2,8	95	0,012	5,2
04	**250**	**750**	3600	**50**	55	95	55	110	146	170	146	70	128	M8	76	42	28	3,2	114	0,031	9,5
05	**260**	**970**	3200	**60**	65	100	65	125	161	185	161	80	143	M8	78	43	31	3,5	121	0,049	12,0
06	**550**	**1500**	2800	**65**	70	120	70	140	190	215	190	90	166	M10	86	47	34	3,8	132	0,100	18,3
07	**1000**	**2500**	2600	**75**	80	130	80	150	204	235	204	100	178	M12	98	56	34	4,0	145	0,153	23,3
08	**1800**	**3500**	2600	**80**	85	140	90	170	227	260	227	110	198	M12	112	66	39	4,6	165	0,258	32,6
09	**2200**	**5200**	2400	**85**	90	150	100	170	239	275	239	110	207	M16	118	69	39	5,0	171	0,338	38,3
10	**3600**	**10000**	1700	**110**	115	190	120	225	310	350	310	150	267	M20	148	80	48	5,5	211	1,185	80,3

Notes

- Design for flange mounting of wheels and pulleys.
- Axially secured by an end plate.
- Weights and moments of inertia for couplings with maximum diameter DLI.

Ordering example

- Hub AKA
- Bore Ø 60 H7, keyway to DIN 6885-1 with set screw
- Coupling components to be dynamically balanced to quality G 6.3, n = 1450 rpm with reference to DIN ISO 1940 part 1
- Disconnecting torque T_A = 1300 Nm

AKA 06

[1] Higher disconnecting torques on request.

[2] Bore of the flanged component is to be machined with fit N7.

To identify complete item numbers and further order options, please use our configurators on **flender.com**.

SHAFT MOUNTING DESIGN AKA

with clamping sleeve

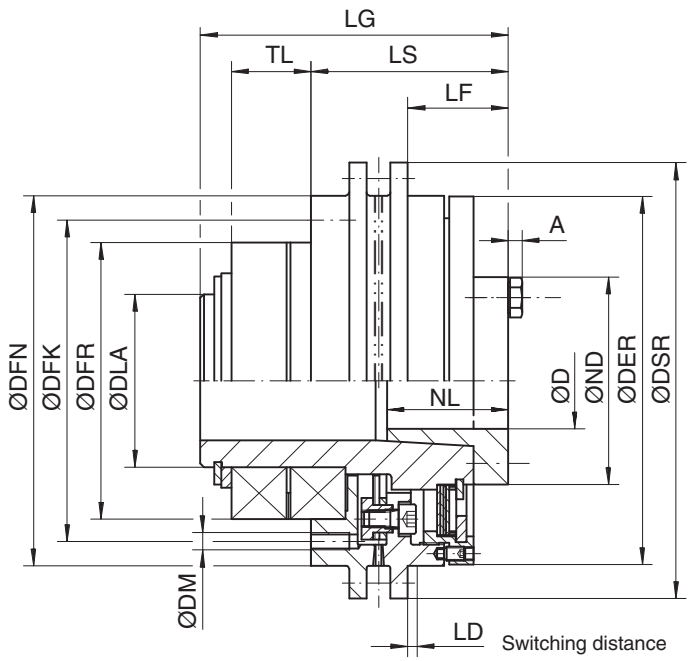

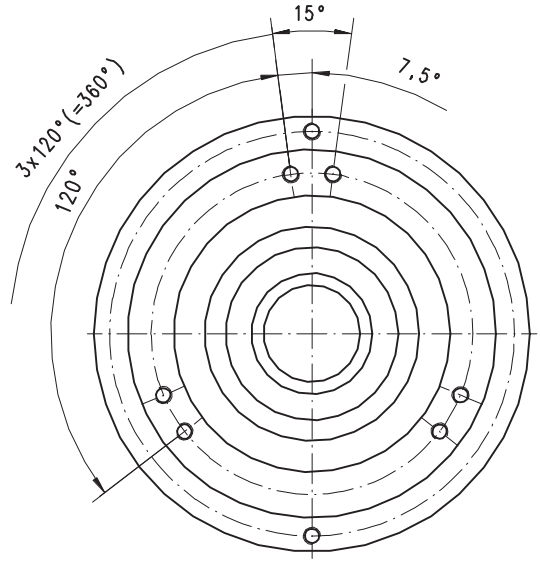

Size	Disconnecting torque $T_{A\,min}$ Nm	$T_{A\,max}$ [1] Nm	Speed n_{max} rpm	Dimensions in mm D max.	ND	NL	DFR [2] h5	DER	DSR	DFN	DLA	A	DFK	DM	LS	LF	TL ±0,05	LD	LG [3]	Moment of inertia J kgm²	Weight m kg
02	**60**	**200**	5000	**30**	60	35	80	107	126	107	50	4	93	M5	57	29	23	2,6	89	0,007	4,0
03	**150**	**380**	4500	**36**	70	40	90	118	140	118	55	4	104	M6	61	31	25	2,8	95	0,012	5,2
04	**280**	**750**	3600	**50**	95	45	110	146	170	146	70	5,3	128	M8	76	42	28	3,2	114	0,031	9,1
05	**260**	**970**	3200	**60**	100	50	125	161	185	161	80	5,3	143	M8	78	43	31	3,5	121	0,049	11,7
06	**550**	**1500**	2800	**65**	120	55	140	190	215	190	90	5,3	166	M10	86	47	34	3,8	132	0,099	17,6
07	**1000**	**2500**	2600	**75**	130	65	150	204	235	204	100	6,4	178	M12	98	56	34	4,0	145	0,152	22,8
08	**1800**	**3500**	2600	**80**	140	75	170	227	260	227	110	6,4	198	M12	112	66	39	4,6	165	0,257	31,5
09	**2200**	**5200**	2400	**85**	150	80	170	239	275	239	110	7,5	207	M16	118	69	39	5,0	171	0,336	37,1
10	**3600**	**10000**	1700	**110**	190	100	225	310	350	310	150	7,5	267	M20	148	80	48	5,5	211	1,180	78,3

Notes

- Design for flange mounting of wheels and pulleys.
- Weights and moments of inertia for couplings with maximum diameter DLI.

Ordering example

- Hub AKA with clamping sleeve
- Bore for shaft diameter Ø 60 h6
- Coupling components to be dynamically balanced to quality G 6.3, n = 1450 rpm with reference to DIN ISO 1940 part 1
- Disconnecting torque T_A = 1300 Nm

AKA 06 with clamping sleeve

[1] Higher disconnecting torques on request.

[2] Bore of the flanged component is to be machined with fit N7.

[3] Dimension LG results after tightening of the clamp connection.

To identify complete item numbers and further order options, please use our configurators on **flender.com**.

COMBINATION EXAMPLES

with v-belt-pulleys, timing-belt-pulleys or chain wheels

The series AKA (shaft mounting design) can be combined with various pulleys and wheels. These could be e.g. v-belt-pulleys, timing-belt-pulleys or chain wheels. On request we offer complete solutions.

AKA with v-belt-pulley

Dimensions of the v-belt-pulley acc. to customer's specification

Series AKA/KS

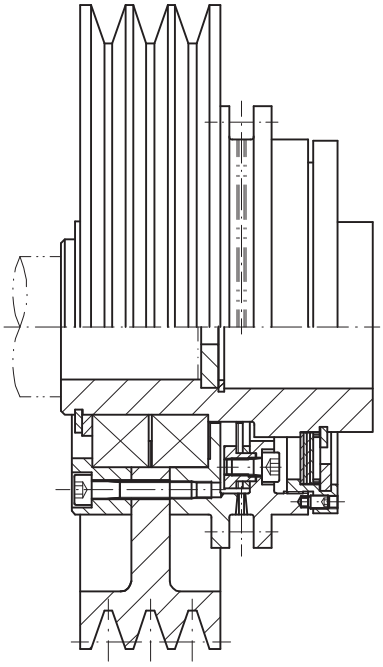

AKA with timing-belt-pulley

Dimensions of the timing-belt-pulley acc. to customer's specification

Series AKA/ZS

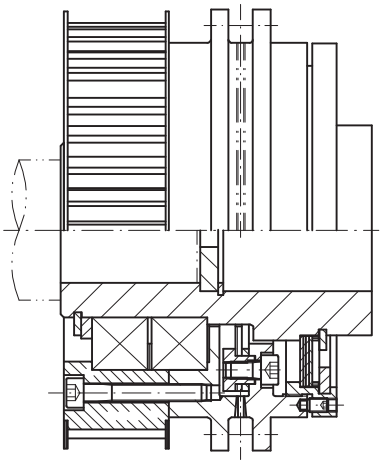

AKA with chain wheel

Dimensions of the chain wheel acc. to customer's specification

Series AKA/KR

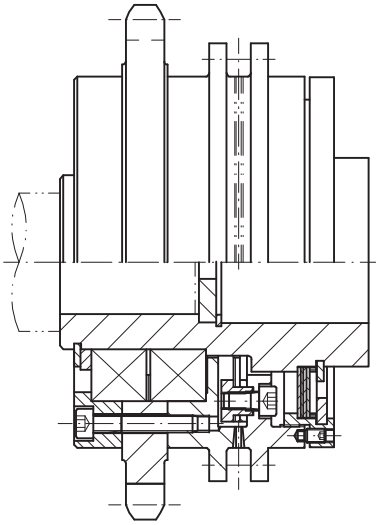

SPECIAL DESIGNS OF THE SERIES AKA

The ARPEX torque limiter can be combined with various drive media. As example two special designs of the series AKA with reinforced bearing for mounting of universal joint shafts respectively combination with the flexible RUPEX coupling are shown.

Apart from the series with ARPEX, N-EUPEX and RUPEX which are described in this brochure, the torque limiter can be adapted to most flexible couplings.

On request we offer complete solutions.

AKA for mounting of universal joint shafts

The torque limiter is suitable for applications where universal joint shafts absorb the larger axial movement.

Hole arrangement to flange the universal joint shaft acc. to customer's specification.

Series AKA/GW

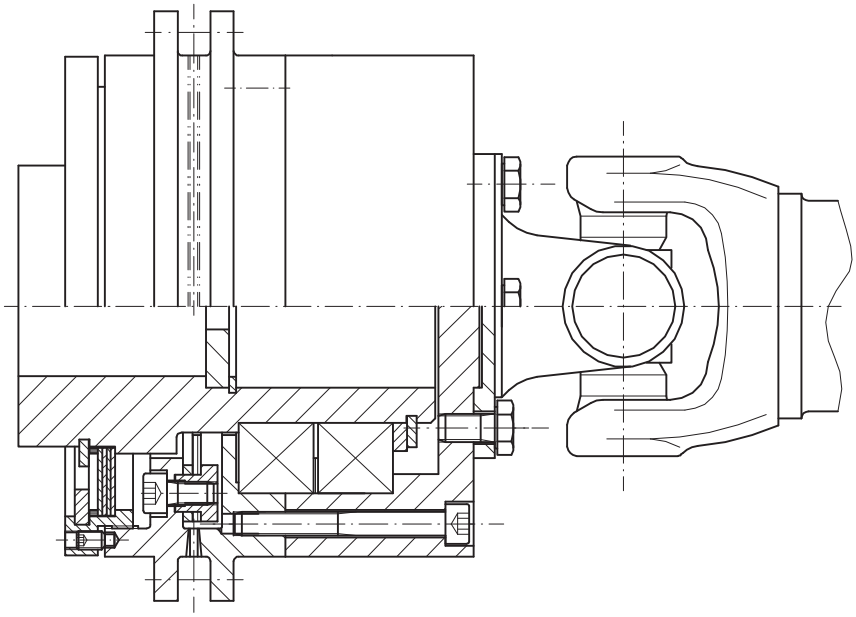

AKA combined with RUPEX coupling

Apart from the flexible N-EUPEX coupling the torque limiter can also be combined with the flexible RUPEX coupling.

This combination is mainly intended for higher disconnecting torques.

The elastic synthetic buffers dampen and prevent the built-up of torsional vibrations, enabling critical speeds to be displaced.

By the limitation of the vibration amplitudes, the total machinery equipment is protected.

Series AKA/RU

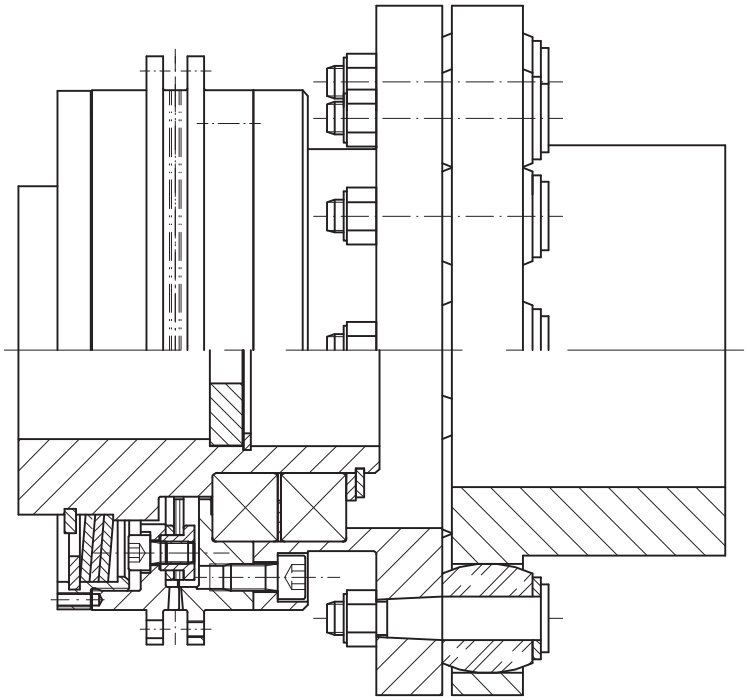

ACCESSORY

Switching device

Functional manually operated lever for switching on and separation of the torque limiter.

On request it is also possible to offer a solution for an installed lever, which is integrated in the plant.

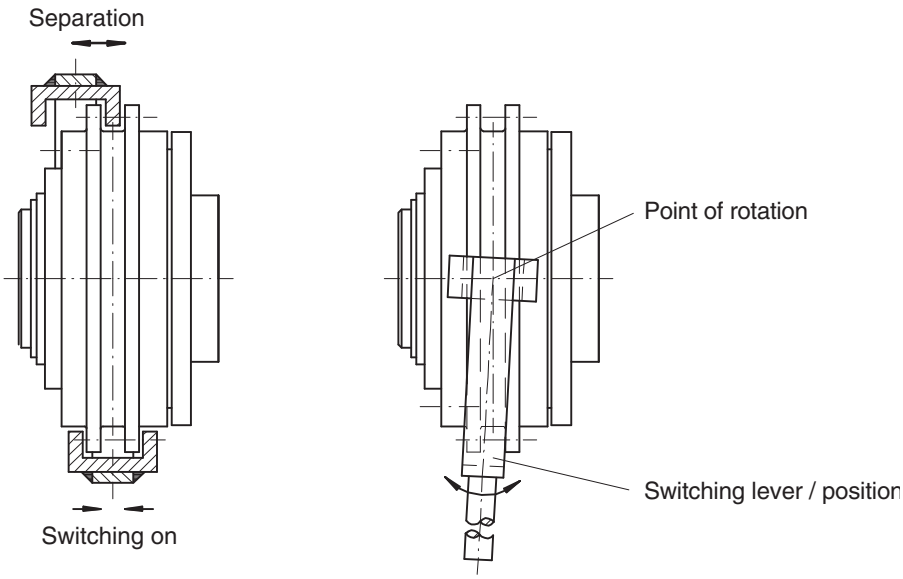

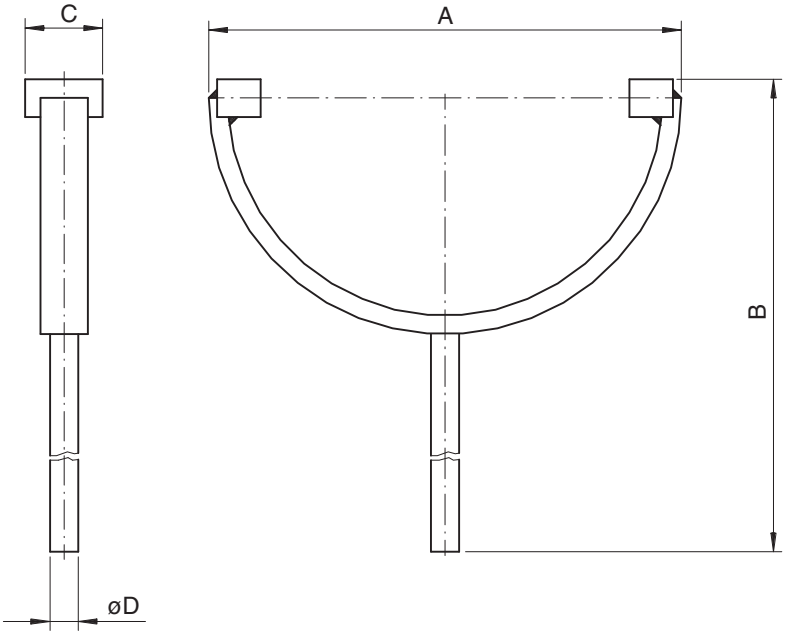

Dimensions in mm				
Size	A	B	C	D
02	146	300	32	12
03	168	340	33	12
04	193	400	38	12
05	214	450	39	15
06	250	475	42	15
07	264	475	47	15
08	298	500	51	15
09	315	530	55	15
10	406	650	72	20
11	550	850	94	25
12	610	1200	94	30
13	720	1500	131	30

Limit switch

Operation

If a metal object (in this case the indexing ring of the torque limiter) moves in the operating area of the inductive sensor (NAMUR-transmitter) a disconnection switch will be actuated and the drive will be switched off immediately through a relay. It is also possible to release an acoustic or visual signal additionally.

Design

The NAMUR-transmitter can be activated from all sides. The transmitter is joined with the disconnection switch via a 2m-cable. The disconnection switch is furnished with a short circuit- (LK) and break-control (LB) of the cable, so that the voltage-supply of the transmitter is checked permanently. It has one relay output.

Positive direction

The positive direction can be adjusted at the disconnection switch via switch S1a. During normal operation of the plant the relay is operating and the transmitter can either be covered or not covered.

Other designs of the NAMUR-transmitter also possible (other switching distances, other cable-length or with plug instead of cable connection).

NAMUR transmitter

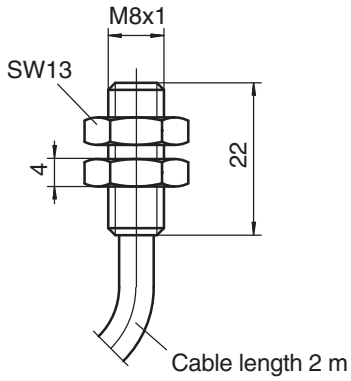

Disconnection switch

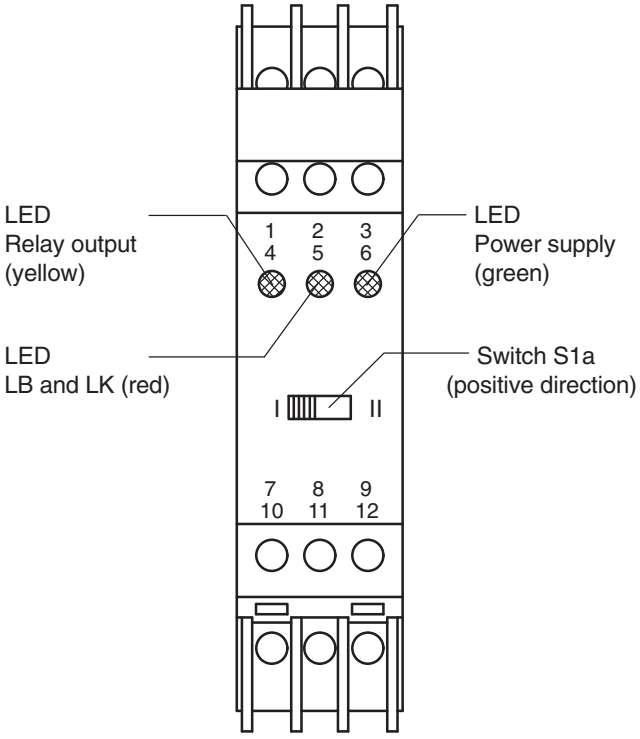

Connection plan (switch S1a at position I)

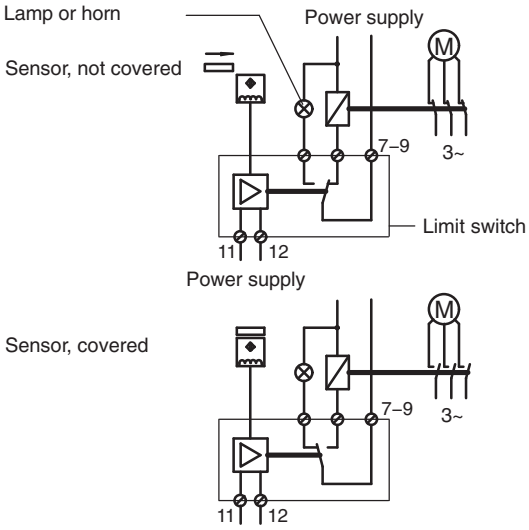

Technical data	
Nominal voltage	AC 195,5 – 253 V, 45 – 65 Hz
Rate of power input	≤ 0,8 W
Contact load relay	AC 250 V / 2 A
Switching distance NAMUR transmitter	0 – 1,215 mm
Ambient temperature	–20 °C to 65 °C
Switching frequency	max. 25 Hz
Protection type NAMUR transmitter	IP67
Protection type disconnecting switch	Ex1

APPENDIX

ISO fits, parallel and taper keys **A/2**
Fitting recommendations for safety couplings A/2
Fitting recommendations ARPEX hubs ARS-6, N-EUPEX hubs, RUPEX hubs A/2
Parallel and taper keys A/3

A

ISO FITS, PARALLEL AND TAPER KEYS

A

Fitting recommendations for safety couplings

Description	Application	Shaft diameter mm	Shaft limit	Bore limit Reversing operation	Bore limit One-direction operation
Transition fit with keyway	Safety couplings	all	h6	on request	M7
			k6		H7
			m6		G7
			n6		G7
			p6		F7

Fitting recommendations ARPEX hubs ARS-6, N-EUPEX hubs, RUPEX hubs

For many applications, the fit assignment m6/H7 is especially suitable.

Description	Application	Shaft limit	Bore limit
Sliding fit with parallel key connection not suitable for reversing operation	For steel and cast hubs	j6	H7
		h6	J7
Press fit with parallel key connection not suitable for reversing operation	For steel and cast hubs	h6	K7
		k6	H7
Interference fit with parallel key connection suitable for reversing operation	For steel and cast hubs	m6	H7
		n6	H7
		h6	M7
	Only for steel hubs Preferred for N-ZAPEX and ARPEX coupling series.	h6	P7
		k6	M7
		m6	K7
		n6	J7
		p6	H7
		s6	F7
Shrink fit connection without parallel key	Only for steel hubs The permitted hub tension must be urgently checked.	u6	H6
		v6	H6
		x6	H6

Parallel and taper keys

Parallel key connection

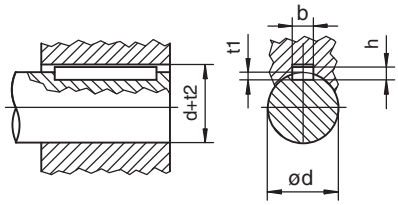

Round headed parallel key and keyway acc. to DIN 6885/1 (issued 08.68)

Taper key connection

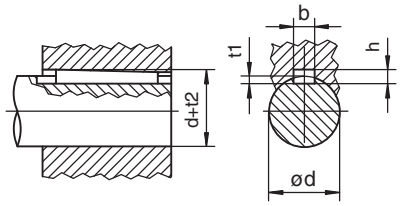

Taper sunk and laid in key and keyway acc. to DIN 6886 (issued 12.67)

Diameter d above mm	to mm	Width b [1] mm	Height h [2] mm	Depth of keyway in shaft t1 mm	Depth of keyway in hub d + t2 DIN 6885-1 mm	DIN 6886 mm
8	10	3	3	1,8	d + 1,4	d + 0,9
10	12	4	4	2,5	d + 1,8	d + 1,2
12	17	5	5	3	d + 2,3	d + 1,7
17	22	6	6	3,5	d + 2,8	d + 2,2
22	30	8	7	4	d + 3,3	d + 2,4
30	38	10	8	5	d + 3,3	d + 2,4
38	44	12	8	5	d + 3,3	d + 2,4
44	50	14	9	5,5	d + 3,8	d + 2,9
50	58	16	10	6	d + 4,3	d + 3,4
58	65	18	11	7	d + 4,4	d + 3,4
65	75	20	12	7,5	d + 4,9	d + 3,9
75	85	22	14	9	d + 5,4	d + 4,4
85	95	25	14	9	d + 5.4	d + 4.4
95	110	28	16	10	d + 6.4	d + 5.4
110	130	32	18	11	d + 7.4	d + 6.4
130	150	36	20	12	d + 8.4	d + 7,1
150	170	40	22	13	d + 9.4	d + 8,1
170	200	45	25	15	d + 10.4	d + 9,1
200	230	50	28	17	d + 11.4	d + 10,1
230	260	56	32	20	d + 12.4	d + 11,1
260	290	63	32	20	d + 12.4	d + 11,1
290	330	70	36	22	d + 14.4	d + 13,1
330	380	80	40	25	d + 15.4	d + 14,1
380	440	90	45	28	d + 17.4	d + 16,1
440	500	100	50	31	d + 19.4	d + 18,1

[1] The tolerance band for the hub keyway width b for parallel keys is normally ISO P9, that for the taper keys ISO D10.

[2] The dimension h of the taper key indicates the maximum height of the key and the dimension t2 the maximum depth of the keyway in the hub.

FLENDER

FLENDER COUPLINGS CATALOG **FLE 10.7** EDITION 2026 EN

WE **MOVE** the WORLD

Flender GmbH
Alfred-Flender-Straße 77
46395 Bocholt
Germany

Article no.: FLEX-C10122-00-7600

Subject to changes and errors.
The information given in this product catalog includes descriptions and performance features that in specific applications do not always apply in the form described or may change through further-development of the products. The desired performance features are binding only if they are expressly agreed on conclusion of contract. Subject to availability for delivery and to technical changes.

flender.com