CU-120
November 11, 2025

TYPE 95 Series 4 Integrated Flame Scanner

EAЭC
RU C-US.HA65.B.00172/19

FUNCTIONAL SAFETY
SIL3

DESCRIPTION

The Fireye InSight Series IV scanner belongs to an established family of versatile fully microprocessor based, integrated flame scanners. The InSight Series IV scanner holds multiple worldwide safety agency approvals (see Model Listings for full details).

The InSight Series IV scanners utilize advanced techniques for discrimination and integrate the flame detection, amplification, safety determination and flame switch functions into a single detection head. No separate amplifier or flame switch module is therefore required to interface with the main burner management system.

InSight Series IV incorporates the superior detection and discrimination elements of the popular InSight II product with some enhanced features.

The scanner measures the amplitude of the modulations (the flame "flicker") that occur within the targeted flame. During the scanner set-up procedure, the modulation frequency that yields the best flame ON/OFF discrimination is selected. The appropriate modulation frequency and sensor gain can be either manually or automatically selected.

InSight Series IV is a solid-state detector scanner utilizing either UV or IR detector, and two different available connectors which are compatible either with the 59-608, 59-547 and 59-497 (-1WINC models) cable.

Standard features include an independently adjustable Flame Relay, 21 choices of modulation frequency, adjustable sensor gain, adjustable flame relay ON/OFF thresholds, a 4-20 mA analog signal strength output, Fault Relay, four selectable programmable files (e.g., for different fuels or firing rates), and Auto Config capability with manual override. Remote communication capability is available via optional "Fireye Explorer" PC software (CU-109).

These InSight Series IV sensors have a two-line by sixteen-character alpha-numeric OLED display with a five-pushbutton keypad.

The -2 models of the InSight Series IV (e.g., 95UVS4-2, 95IRS4-2) provide a Form C flame relay output contact (NO/NC).

All scanner models are powered by 24 Vdc and contain electronic self-checking (no mechanical shutter required). Electrical connection is via quick-disconnects or hard wired to terminal blocks on the explosion proof models (e.g., 95UVS4-1CEX). Fiber optics are also available for extended viewing applications.

Type 95UVS4-1WINC is the UV model and is provided with a cable quick-disconnects compatible with the 59-608 (Insight 1 cable 59-497). Type 95UVS4-1 has an InSight II style quick disconnect compatible with the 59-547 cable. The same IR models are 95IRS4-1WINC and 95IRS4-1.

Safety Information

WARNING

The equipment described in this manual is capable of causing property damage, severe injury, or death. It is the responsibility of the owner or operator to ensure that the equipment described is installed, operated, and commissioned in compliance with the requirements of all national and local legislation, which may prevail.

When this equipment is fitted to an appliance, due regard must also be given to the requirements of that appliance.

Before attempting to install, commission, or operate this equipment, all relevant sections of this document must be read and fully understood. If in doubt about any requirements consult Fireye.

Installation, commissioning, or adjustment of this product **MUST** be carried out by suitably trained engineers or personnel qualified by training and experience.

After installation or modifications to the installation all functions of the equipment **MUST** be checked to ensure safe and reliable operation of the InSight Series IV scanner.

The manufacturer of this equipment accepts no liability for any consequences resulting from inappropriate, negligent, or incorrect installation, commissioning, or adjustment of operating parameters of the equipment. There are no user serviceable parts.

Before attempting any work on this equipment or any equipment controlled by or connected to this equipment, all related electrical supplies **must** be isolated.

Safety interlocks **must not** be removed or overridden. Any faults once detected **must** be corrected before the control is operated.

The InSight Series IV scanner is classified as a Type B device according to IEC 61508, having a hardware fault tolerance of 0. For detailed information regarding the Certification, see File MP1537 on the UL Online Certification Directory at www.ul.com or by following the link in the QR Code below:

Table of Contents

DESCRIPTION 1
OPERATION 4
APPLICATION 4
DIMENSIONS 6
MODEL LISTING 8
SPECIFICATIONS 9
INSTALLATION NOTES 10
INSTALLATION PROCEDURE 10
MECHANICAL ACCESSORIES 12
ELECTRICAL ACCESSORIES 15
SCANNER WIRING 16
REMOTE FILE SELECTION 22
WIRING FOR REMOTE COMMUNICATIONS 23
GROUNDING AND SHIELDING TECHNIQUES 24
PROGRAMMING THE INSIGHT Series IV SCANNER 24
INSIGHT Series IV MENU STRUCTURE 25
THE MAIN STATUS MENU 27
THE ERROR HISTORY MENU 31
THE PASSWORD MENU 34
THE CONFIG MENU 36
THE AUTO CONFIG MENU 40
THE FILE COPY MENU 43
THE 4/20 mA MENU 45
THE DATE/TIME MENU 47
THE COMMS MENU 49
THE MANUAL CONFIG MENUS 51
MANUAL SET-UP IN MANUAL CONFIG MENU 54
INSIGHT Series IV REPLACEMENT PROCEDURE 58

OPERATION

The InSight Series IV scanner has numerous adjustment options available. It can be tuned either automatically or manually to achieve the optimum level of sensitivity to the target flame balanced with superior discrimination of background radiation.

The InSight Series IV scanner measures the amplitude of the modulations (the flame "flicker") that occur within the targeted flame. The sensor within the scanner measures these amplitudes seen within either the ultraviolet (UVS4) or infrared (IRS4) spectral ranges across a wide range of flicker frequency bands. In addition, the scanner has a flame relay (FR) that can be related to the sensor signals in logical configurations.

During the scanner set up procedure, the logical operation for the flame relay is selected based on the settings relative to user gain, required (flicker) frequency band and switching thresholds. Refer to commissioning procedure for more details on set up procedures, which is selected for the desired sensor.

The current Flame Signal Strength (FS) can be viewed on the scanner display via the main menu. This displayed value is the measure of amplitude within the selected modulation (flicker) frequency band, for example: FS=185 (Flame signal for sensors ranges from 0 to 999)

The scanner set-up procedure, the operation, and settings relative to the sensor signal and the flame relay is chosen either in Auto Config or Manual Config mode to provide the optimum flame ON/OFF discrimination.

The flame relay FR energizes its normally open contacts closed when the flame quality is at or above the programmed flame ON threshold and remains on until the flame quality is at or below the programmed flame OFF threshold.

IMPORTANT NOTE - *The FAULT RELAY is energized when the scanner is powered (24 V DC) and when the scanner has successfully passed all internal self-checking routines. The Fault relay is de-energized if there is a power interruption to the scanner or if the scanner has detected an internal fault.*

APPLICATION

The InSight Series IV is best suited to combustion applications that require the highest level of sophistication and flexibility (addition choices of modulation frequencies, and the time-saving Auto Config function), and remote Modbus communications capability (e.g., larger multi-burner boilers and furnaces).

The InSight Series IV scanner contains either the infrared or ultraviolet flame sensor described below. The infrared flame sensor responds to infrared radiation from 700 to 1700 nanometers wavelength. The ultraviolet flame sensor responds to ultraviolet radiation from 295 to 320 nanometers wavelength.

Functional safety proof test requirements

As a part of the Insight Series IV Flame Scanner functional safety evaluation as a SIL3 capable product there is a requirement for periodic proof testing of the safety function by the end user.

According to section 7.4.3.2.2 f) of IEC61508 proof tests shall be undertaken to reveal dangerous faults which may be undetected by diagnostics test. This requires that it is necessary to specify how dangerous undetected faults which have been noted during the failure modes, effects and diagnostics analysis can be detected during proof testing.

SUGGESTED PROOF TESTS

Active Flame OFF test - Shutdown the burner and ensure that the flame off condition is detected and signaled by the flame detector as a flame off condition

Active False Flame test - verify that prior to start up (no flame present) there is no indication of a flame on condition (false flame signal) on the flame scanner (this is typically integrated within the Burner Management System as a pre-start permissive to prevent start up if a false flame condition is detected.

An alternative proof test can be performed if the burner cannot be shut down or is a critical process - see table below.

Table 1: Suggested proof test

Step	Action
1.	Bypass the safety function and take appropriate action to avoid a false trip.
2.	Remove the flame or interrupt the path between the flame and scanner. Confirm flame relay operation. Restore the flame or flame path.
3.	Remove power to the flame scanner. Confirm alarm relay operation. Restore power to the scanner.
4.	Remove the bypass and otherwise restore normal operation.

The suggested proof test interval and good practice is to carry out the proof test annually

The above covers the suggested proof test procedures and periodic proof test requirements in terms of IEC61508. This should not be considered a replacement for recommended testing of the scanner adjustments which are required to be verified each time the scanner is commissioned, adjusted, settings are changed or re-commissioning takes place. In these cases, the caution below should be implemented by suitably trained engineers or qualified personnel who have been trained and are experience in the requirements.

CAUTION: After selecting Sensor BAND, Sensor GAIN, and Flame Relay ON & OFF Thresholds, proper flame detection and flame discrimination must be verified by starting and stopping the burner several times. The flame relay must reliably de-energize for all flame out conditions. This testing should be done with various adjacent burners on and off, and at various load levels. This is a requirement for proper operation.

InSight 4 SCANNER FEATURES

Features	95UVS4-1WINC	95IRS4-1WINC	95UVS4E-1WINC	95IRS4E-1WINC	95UVS4-1 95UVS4-2	95IRS4-1 95IRS4-2	95UVS4-1CEX 95UVS4-2CEX	95IRS4-1CEX 95IRS4-2CEX
UV or IR Sensor	UV	IR	UV	IR	UV	IR	UV	IR
Flame Relay	YES	YES	YES	YES	YES	YES	YES	YES
Fault Relay	YES	YES	YES	YES	YES	YES	YES	YES
4-20 mA Output	YES	YES	YES	YES	YES	YES	YES	YES
Modulation Frequency Selectors	21	21	21	21	21	21	21	21
Memory Files	4	4	4	4	4	4	4	4
Communications	YES	YES	YES	YES	YES	YES	YES	YES
Auto Config	YES	YES	YES	YES	YES	YES	YES	YES
2 X 16 Alpha Display	YES	YES	YES	YES	YES	YES	YES	YES
Housing Material	Aluminum	Aluminum	Aluminum	Aluminum	Aluminum	Aluminum	Aluminum	Aluminum

DIMENSIONS

FIGURE 1. SCANNER 95UVS4-1WINC, 95UVS4E-1WINC, 95IRS4-1WINC, 95IRS4E-1WINC, 95UVS4-1, 95IRS4-1

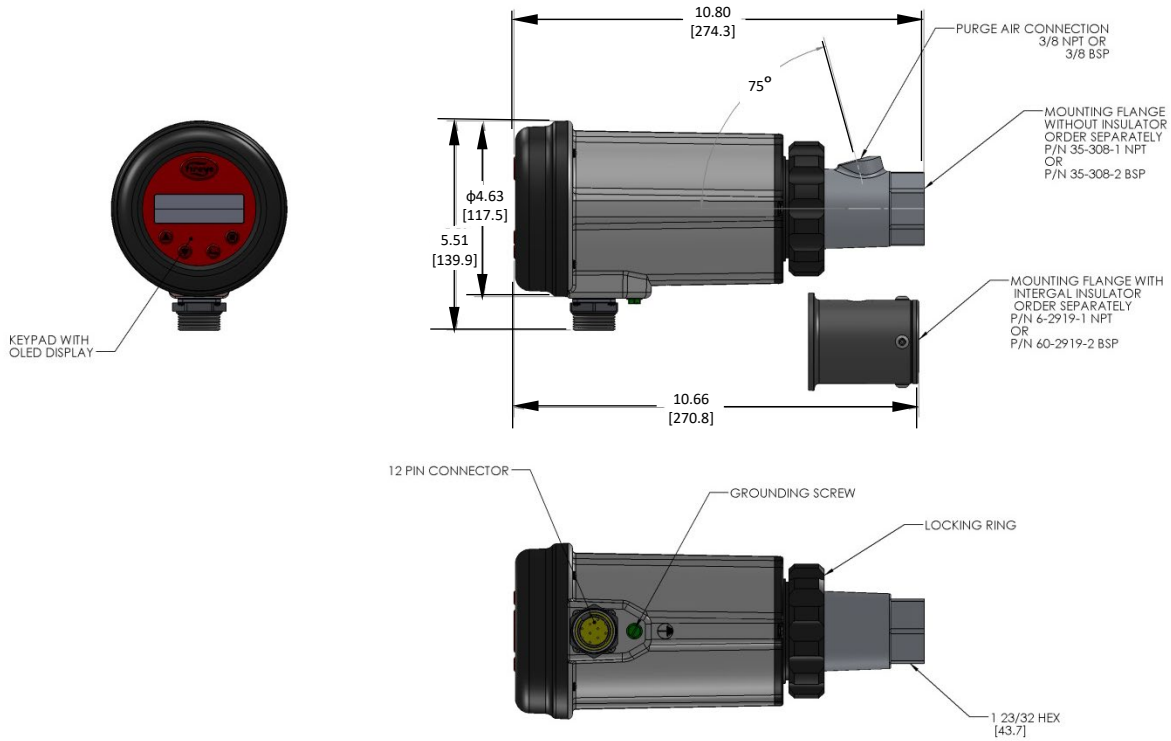

Scanner Type	Quick-Disconnect	
95UVS4-1, 95IRS4-1	12-pin male (for 59-547-xx cable)	
95UVS4-1WINC, 95IRS4-1WINC	12-pin male (for 59-608-xxx cable)	59-497 Insight 1

FIGURE 2. TYPE 95UVS4-1CEX, 95UVS4-2CEX, 95IRS4-1CEX, 95IRS4-2CEX SCANNERS, OPTIONAL FLAME-PROOF HAZARDOUS AREA HOUSING

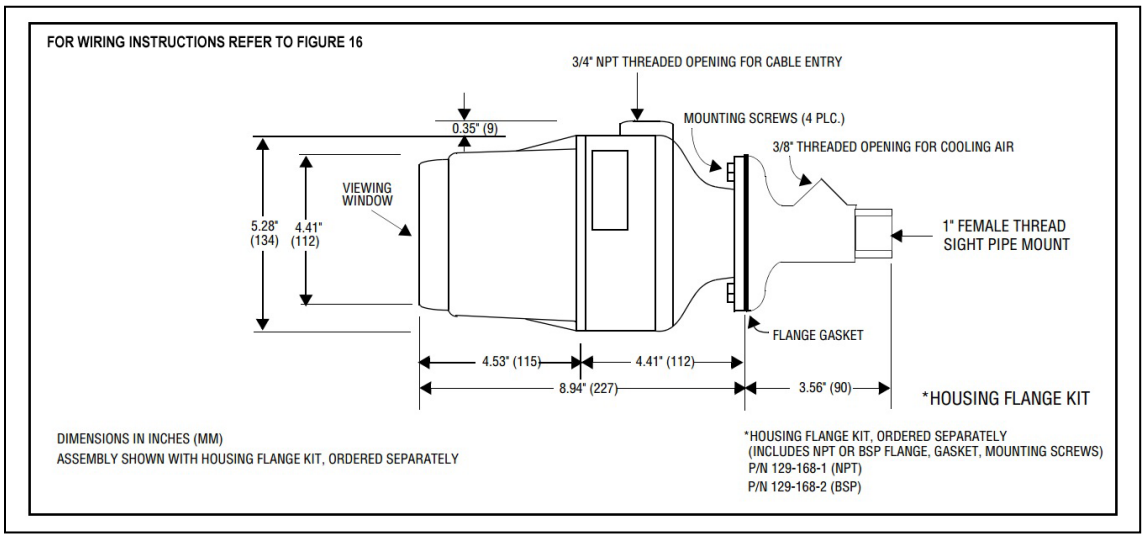

- Housing Flange Kit ordered separately, includes NPT or BSP flange, gasket, mounting screws, PN 129-168-1 (NPT) or PN 129-168-2 (BSP).
- Suitably rated blanking elements must be used on all unused openings.
- Supply connection wiring shall have a temperature rating of at least +105°C

Note: *The above items are suitable for the InSight Series IV scanners rated environment and conditions of use.*

Warning! - Risk of electrostatic discharge. Make sure that all personnel and equipment are correctly grounded when installing or handling the InSight Series IV scanner in potentially explosive atmospheres.

MODEL LISTING

PART NUMBER	SENSOR	CONNECTOR TYPE	HOUSING RATING	AGENCY APPROVALS					
				UL C/US	FM	CE	EAC	IN-METRO	SIL
95UVS4-1	UV	InSight II	See note 1	YES	YES	YES	YES	YES	YES
95IRS4-1	IR	InSight II		YES	YES	YES	YES	YES	YES
95UVS4-2	UV	InSight II		YES	YES	YES	YES	YES	YES
95IRS4-2	IR	InSight II		YES	YES	YES	YES	YES	YES
95UVS4-1WINC	UV	InSight I		YES	YES	YES	YES	YES	YES
95IRS4-1WINC	IR	InSight I		YES	YES	YES	YES	YES	YES
95UVS4E-1WINC	UV	InSight I		YES	YES	YES	YES	YES	YES
95IRS4E-1WINC	IR	InSight I		YES	YES	YES	YES	YES	YES
95UVS4-1CEX	UV	SCREW TERMINAL	See note 2	YES	YES	YES	YES		YES
95IRS4-1CEX	IR	SCREW TERMINAL		YES	YES	YES	YES		YES
95UVS4-2CEX	UV	SCREW TERMINAL		YES	YES	YES	YES		YES
95IRS4-2CEX	IR	SCREW TERMINAL		YES	YES	YES	YES		YES
60-2984-1	UV	SCREW TERMINAL							
60-2984-2	IR	SCREW TERMINAL							
60-2984-3	UV	SCREW TERMINAL							
60-2984-4	IR	SCREW TERMINAL							

Notes:

1. UL Hazardous Locations
   ATEX, DEMKO, 18 ATEX 2039X II 3 G Ex ic ec nC IIC T5 Gc / II 3 D Ex tc IIIC T70C Dc
   IECEx (IECEx UL 18.0049X) Ex ic ec nC IIC T5 Gc / Ex tc IIIC T70C Dc
   C1 D2 Grp A B C D; CII D2 Grp F G; CIII, HAZARDOUS LOCATIONS, T5 -40ºC TO 65ºC
2. ATEX (CESI 13 ATEX 021 X) IECEx (IECEx CES 13.0004X) Ex db IIC T6 or T5 or T4 Gb /Ex tb IIIC T85°C or T100°C or T135°C Db IP66
3. 95UVS4 / 95IRS4 models meet CISPR Class A limits. Applications which require CISPR Class B shall be tested for EMC emissions after incorporation of the control into the end-use equipment.

SPECIFICATIONS

MECHANICAL:

Housing Material: Standard Models and CEX: Cast aluminum with gray polyester powder coat finish
Ingress Protection IP66 with 0.4 joule impact rating

Housing Weight: Standard Models: 5.0 lbs. (2.3kg); CEX Model: 6.3 lbs. (2.9kg)

Mounting: Requires one threaded mounting flange, ordered separately (see below).
For fiber optic mount, refer to bulletin CU-117. In the specific case of installation on InSight I fiber optics already in place refer to bulletin 133-754 and use Adapter Kit 129-193.

Cooling / Purge Air Requirements:

Source: Clean, dry, cool

Volume: 4 SCFM (113 l/min) at 3/8" threaded mounting flange, or 1 inch "Y" fitting, mounted on scanner sight pipe. Temperature near the upper limit of the scanner operating range and/or use with dirty/dusty fuels may require up to 15 SCFM (425 l/min).

Pressure: Adequate to overcome furnace or wind box pressure

Operating Temperature Rating: -40°F to +150°F (-40°C to +65°C) ambient; -40°F to 176°F (-40°C to 80°C), scanner internal temperature.

Storage Temperature Rating: -40°F to + 185°F Ta (-40°C to +85°C Ta)

Humidity: 0% to 95% relative humidity, non-condensing

STANDARD MOUNTING FLANGE:

Material: Cast aluminum with gray polyester powder coat finish. Contains an integral heat-insulating female thread insert

Flange Threads: P/N 60-2919-1 1" NPT female pipe mount with 3/8" NPT female cooling air connection.
P/N 60-2919-2 1" BSP female pipe mount with 3/8" BSP female cooling air connection.

OPTIONAL MOUNTING FLANGE, CAST ALUMINUM:

Material: Cast aluminum (without heat-insulating thread insert), with grey polyester powder coat finish

Flange Threads: P/N 60-2692, 1" NPT female pipe mount with 3/8" NPT female cooling air connection.
P/N 60-2693, 1" BSP female pipe mount with 3/8" BSP female cooling air connection.

ELECTRICAL:

Input Power: 24 Vdc, +10%, -15% supply current: 0.25A, 6VA, Hold Time must be 20 msec
Min. Fireye power supply 60-2685 is recommended

Electrical Connection: 12-pin screw type quick-disconnect

Relay Output: FLAME RELAY, -1:SPST (N.O.) / -2:SPDT (Form-C)
FAULT RELAY, SPST (N.C.)

Contact Rating: Minimum: 10 mA @ 5 Vdc (All models)
Maximum: 2A @ 30 Vdc; 2A @ 50 Vac (Series 4E-1WINC models only)
Maximum 2A @ 30 Vdc; 2A @ 230 VAC (All other models)

Analog Output: 4-20 mA dc current, referenced to 24Vdc common, Max. connected 1oad: 750 ohms

Operator Interface: Alpha -Numeric Display with five pushbutton keys.

Cable Specification: P/N 59-547 (12-conductor):
Multi-core, 12 conductor (color coded), 18- AWG, with foil wrap and overall braided shield and drain wire. PLTC-ER rating. Maximum cable length 1000 feet (305 meters) Cable Jacket: PVC / black (flame-retardant, RoHS compliant)
Temperature Rating: -40°F to +221°F (-40°C to +105°C)
Nominal O.D. 0.52" (13.2 mm), maximum O.D. 0.56" (14.2mm)
P/N 59-497 (12 Conductor)
Multi-core, 12 conductor (color coded), with foil wrap and overall braided shield Six #18 AWG and four #22 AWG conductors, plus one #22 AWG twisted pair Cable Jacket: Irradiated Modified Polyolefin (flame-retardant, low smoke, zero halogen) Maximum Temperature: 257°F (125°C), maximum O.D. 0.43" (10.9 mm)

Vibration specs: Frequency range: 10 Hz – 150 Hz.
Acceleration / Amplitude: 58 to 150 Hz: 1.0 g / 10 to 58 Hz: 0.075g
Sweep rate: 1 octave per minute
Number of sweep cycles: 10
Number of axes: 3, mutually perpendicular

Note: Wiring is SELV for Input (24V DC) only and is non-SELV for the other connections.

INSTALLATION NOTES

The InSight Series IV flame scanners determine the presence or absence of flame by monitoring the frequency spectrum of the flame. The scanner should initially be mounted so that the primary combustion zone is within the scanner's line of sight.

The location and sighting instructions listed in the following sections are rough guidelines for the location of the scanner. The scanner provides feedback via its OLED display to assist in the adjustment and proper alignment of the flame scanner. Refer to the setpoint procedures described in this bulletin.

Note: *An acceptable scanner location must ensure the following:*

Reliable main flame and/or ignitor flame detection at all air flow and furnace loads (ranges of fuel firing).
Rejection of the ignitor flame if too short, or in the wrong position to ignite the main flame reliably, thus prohibiting the delivery of fuel to the burner.

INSTALLATION PROCEDURE

WARNING: Protective filtered lenses should be worn when viewing flame. Infrared and ultraviolet energy from the flame can be damaging to the eyes.

1. The best results are obtained when the scanner is aimed so that the scanner's line of sight intersects the burner center at a slight angle (e.g., 5 degrees) and sees a maximum of the primary combustion zone, as shown in Figure 3. If only one scanner is used per burner, the line of sight should also intersect the igniting flame.
2. For installations where separate scanners are used to monitor main and ignitor flames, the main flame scanner should be sighted so it does not detect the ignitor flame.
3. The scanner should have an unrestricted view of flame as far as possible. Physical obstructions such as air register blades, interfering vanes, or other hardware should be cut away or notched so they do not fall within the scanner's line of sight as shown in Figure 5.

Note: *Always check with the burner manufacturer* ***before*** *you trim the register blades.*

FIGURE 3. **SINGLE BURNER SCANNER SIGHTING**

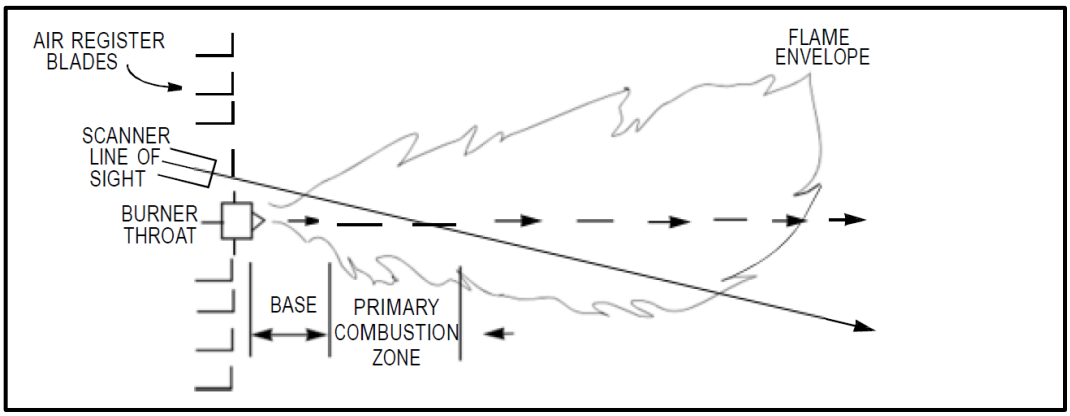

4. Consideration must be given to burner secondary air rotation, some burners have clockwise (CW) air rotation and others have counterclockwise (CCW) air rotation. If combustion air enters the furnace with a rotational movement of sufficient velocity to deflect the ignitor flame in the direction of rotation, position the scanner 10 to 30 degrees downstream of the ignitor as shown in Figure 4 and close to the periphery of the burner throat (See Figure 3).

FIGURE 4. **SCANNER LOCATION VS. SECONDARY AIR ROTATION**

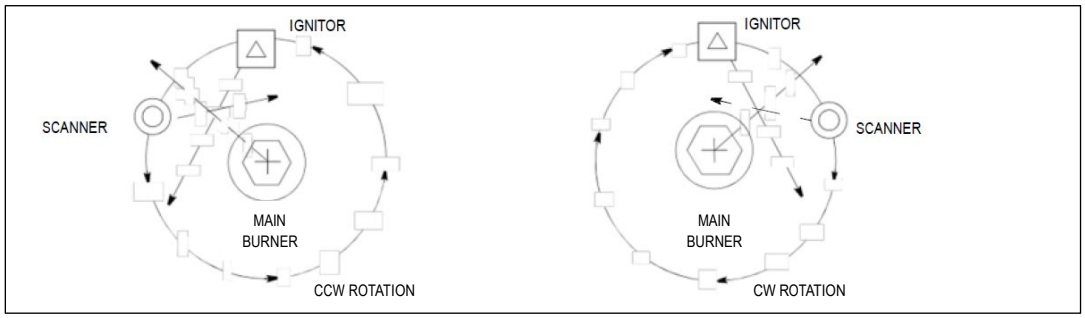

5. Having determined the approximate location for the sight pipe, cut a clearance hole for a two-inch pipe through the burner plate. Look through the hole. If register vanes interfere with the desired line of sight, the interfering vane(s) should be trimmed to assure an unrestricted viewing path at all firing levels as indicated in Figure 5.

Note: Always check with the burner manufacturer ***before*** *you trim register vanes.*

FIGURE 5. **IF POSSIBLE, FLAME SHOULD COMPLETELY COVER SIGHT OPENING**

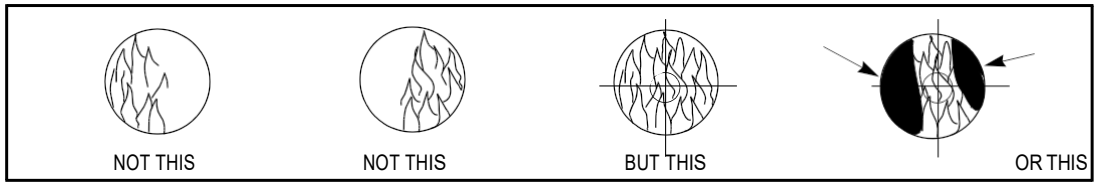

6. The preferred method for mounting surface mounted scanners requires the use of a swivel mount, P/N 60-1664-X, shown in Figures 7, 8, and 9. Center the swivel mount over the two-inch hole in the burner plate and secure using three hexed cap screws (not provided). Install the sight pipe on the swivel mount. If a swivel is not used, insert the end of the sight pipe into the hole, align the hole to the desired viewing angle and tack weld (welding must be adequate to temporarily support the weight of the installed scanner). The sight pipe should be arranged to slant downward so that dirt and dust will not collect inside.

CAUTION: Use no more than one foot of one inch diameter sight pipe. Increase the sight pipe diameter one inch for every additional foot of sight pipe length used to avoid restricting the scanner's field of view.

When a satisfactory sighting has been confirmed by operational testing, secure the swivel mount's ball position in place by tightening the three hex head cap screws located on the swivel mount ring.

7. In larger multi-burner type applications such as power, kiln, or refinery burners, it is recognized that there may be several obstructions within the scanner overall range of view. The same principle of adjusting the scanner such that the flame is within the center of its field of view applies. Use of a swivel mount allows the scanner to be adjusted to target the flame within the center of the scanner range of view. (See obstructed view in figure 6 above).
8. For ease of use, the scanner should be installed on the sight pipe so the OLED display can easily be read.

Note: Operation of the display is independent of position.

9. The scanner lens must be kept free of contaminants (oil, ash, soot, dirt) and the scanner housing temperature must not exceed its maximum rating of 150°F (65°C). Excessive temperatures will shorten scanner life. Both requirements will be satisfied by a continuous injection of purge air at either the 3/8” housing inlet or the 1” “Y” connection ahead of the swivel mount as shown in Figures 6, 7 and 8.

Note: *Internal scanner temperature is available via the display. See “Status Menu” under “Programming the Scanner.”*

The scanner mounting may be made with provision for purge air through only the 3/8” opening as shown in Figure 8 or for purge air through either the 3/8” opening or the 1” “Y” connection as shown in Figure 6. In the latter arrangements, normally only one of the two connections is provided with purge air and the other connection is plugged. When a sealing coupling is used as shown in Figure 6, the 1" “Y” connection is used for the purge air and the 3/8” opening is plugged.

It is good practice to use the sealing coupling (P/N 60-1199-X with NPT or BSP threads) on all installations to insure against unwanted furnace pressures from damaging the scanner lens.

Under normal conditions, with clean burning fuels and moderate ambient temperature conditions, purge air flow of approximately 4 SCFM (113 l/min) is generally adequate. Up to 15 SCFM (425 l/min) may be required for fuels that produce high levels of ash or soot, or for hot environments to maintain the scanner’s internal temperature within specification.

MECHANICAL ACCESSORIES

Surface Mounting Flange (Required)

Standard: **Cast aluminum** with gray polyester powder coat finish. Contains an integral heat-insulating female thread insert (external heat-insulating nipple not required).

P/N 60-2919-1 1" NPT female pipe mount with 3/8” NPT female cooling air connection.

P/N 60-2919-2 1" BSP female pipe mount with 3/8” BSP female cooling air connection.

Optional: **Cast aluminum** with grey polyester powder coat finish. Does not contain heat-insulating insert.

P/N 60-2692-4, 1" NPT female pipe mount with 3/8" NPT female cooling air connection.
P/N 60-2693-4, 1" BSP female pipe mount with 3/8" BSP female cooling air connection.

Swivel Mount (Optional)

The scanner swivel mount, P/N 60-1664-X (see Figure 9, Item A), is used to adjust the scanner sighting angle after the scanner has been installed, the swivel mount is shown in Figures 6, 7, 8, and 9.

Sealing Coupling with Quartz Window (Optional)

The sealing coupling, P/N 60-1199-x (see Figure 6, Item D), is used whenever a coupling or a seal is required for scanner piping. The quartz window blocks furnace pressure, hot gases, and soot from coming in contact with the scanner and contaminating the lens. P/N 60-1199-1 has a 1" NPT thread, p/n 60-1199-2 has a 1" BSP thread. When the sealing coupling is used, a 1 inch “Y” fitting must be used downstream of it for connection of a purge air supply (plug 3/8" opening).

Orifice Kit (Optional)

An orifice may be used to restrict the scanner’s field of view aiding discrimination between the target flame and other flames in the combustion chamber. An orifice may also be used to reduce the total amount of radiation reaching the scanner, thereby avoiding the chance of saturation. Orifice kit (P/N 53-121) contains nine different orifice sizes, and two retaining clips. The orifice can be installed either within the 60-1664 swivel mount, within the 60-1199 coupling, or within the 60-2919-1, 60-2919-2 surface mounting flange. Refer to figures 10 and 11.

Cooling Cover/Vortex-Tube Cooler Kit (Optional)

For high ambient temperature applications, a Cooling Cover (p/n 60-2930-x) and Vortex-Tube Cooler Kit (P/N 60-2720) are available. Refer to bulletins 133-749 and CU-103 for details.

FIGURE 6.

	PART NUMBER
A. SWIVEL MOUNT	60-1664-3 (NPT) 60-1664-4 (BSP)
B. 1" WYE	35-200 (NPT)
C. 1" CLOSE NIPPLE	35-201 (NPT)
D. SEALING COUPLING W/QUARTZ WINDOW	60-1199-1 (NPT) 60-1199-2 (BSP)
E. 1" NIPPLE	35-127-2 (NPT)
F. 3/8" PLUG	35-202 (NPT)
G. SURFACE MOUNTING FLANGE	60-2919-1 (1"NPT) 60-2919-2 (1"BSP)

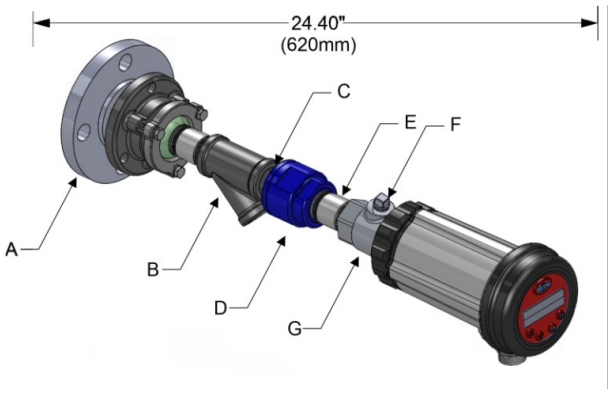

FIGURE 7

	PART NUMBER
A. SWIVEL MOUNT	60-1664-3 (NPT) 60-1664-4 (BSP)
B. 1" WYE	35-200 (NPT)
C. 1" NIPPLE	35-127-2 (NPT)
D. 3/8" PLUG	35-202 (NPT)
E. SURFACE MOUNTING FLANGE	60-2919-1 (1" NPT) 60-2919-2 (1" BSP)

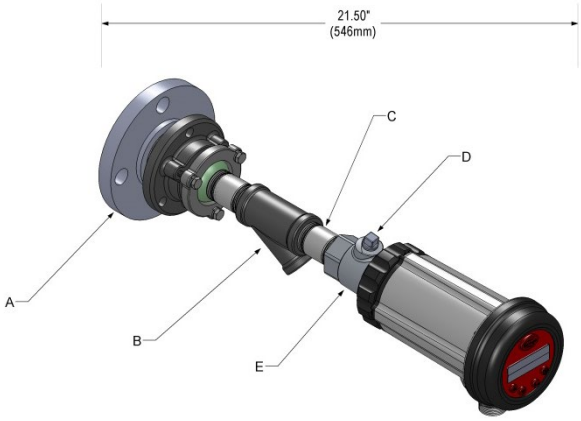

FIGURE 8.

	PART NUMBER
A. SWIVEL MOUNT	60-1664-3 (NPT) 60-1664-4 (BSP)
B. 1" NIPPLE	35-127-2 (NPT)
C. 3/8" THREAD OPENING	
D. SURFACE MOUNTING FLANGE	60-2919-1 (1" NPT) 60-2919-2 (1" BSP)

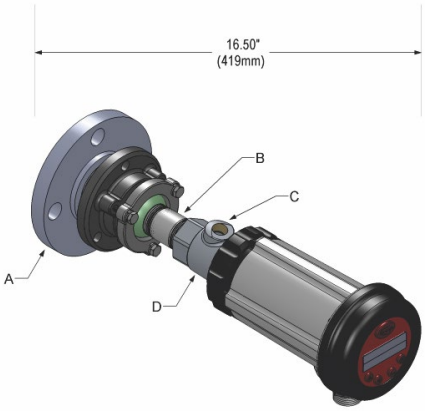

FIGURE 9.

	PART NUMBER
A. SWIVEL MOUNT	60-1664-3 (NPT)
SWIVEL MOUNT	60-1664-4 (BSP)
B. SCANNER CABLE w/connector	59-547-xx or 59-608-xx (for –WINC models)
C. SEALING COUPLING W/QUARTZ WINDOW	
	60-1199-1 (NPT)
	60-1199-2 (BSP)

FIGURE 10.

A-I. Orifices: 0.062" - 0.5" DIA
J. Orifice Retainer: 34-181
Complete set: 53-121

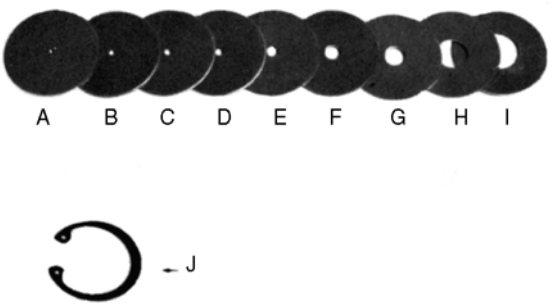

ORIFICES

Figure	Qty.	Part Number	Description
10	1	53-121	Orifice Kit: Contains following items:
10	1	53-121-2	Orifice: Diameter = 0.062"
10	1	53-121-3	Orifice: Diameter = 0.078"
10	1	53-121-4	Orifice: Diameter = 0.093"
10	1	53-121-5	Orifice: Diameter = 0.109"
10	1	53-121-6	Orifice: Diameter = 0.125"
10	1	53-121-7	Orifice: Diameter = 0.187"
10	1	53-121-8	Orifice: Diameter = 0.250"
10	1	53-121-9	Orifice: Diameter = 0.375"
10	1	53-121-10	Orifice: Diameter = 0.500"
10	2	34-181	Orifice Retainer

FIGURE 11.

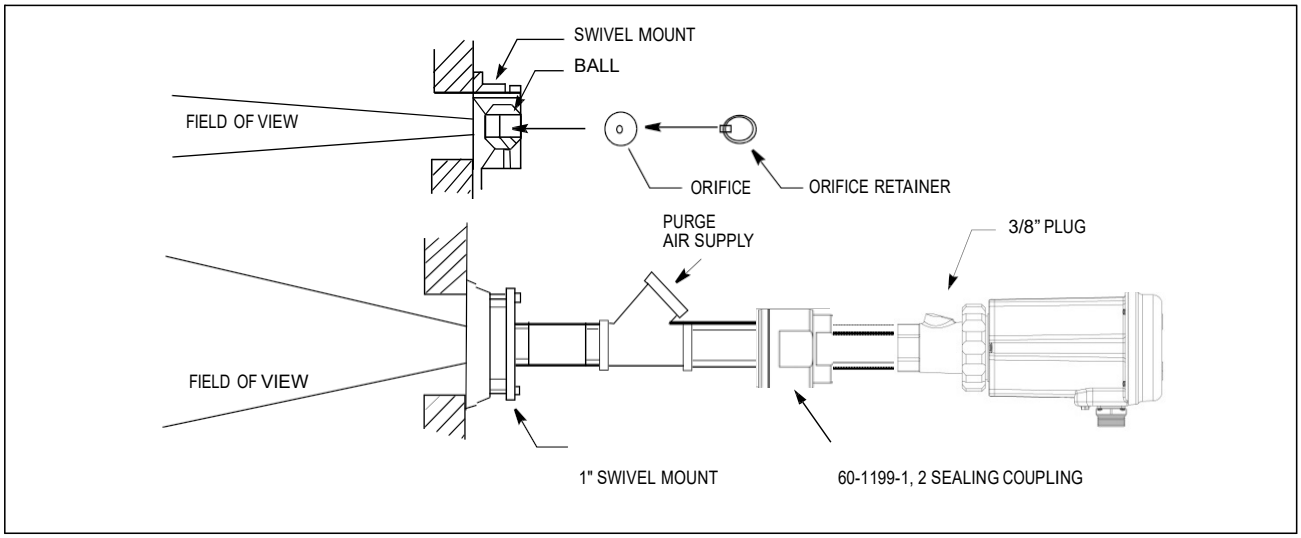

ELECTRICAL ACCESSORIES (see note)

Note: Hazardous Area requirements for InSight Series IV scanners with electrical connectors:

1. For hazardous locations, either the set screw must be tightened (if provided) or the plastic "Lok Fast" retainer (if provided) with the 59-547-xx must be installed over the quick disconnect connector.

Scanner Cables, P/N 59-547

Fireye recommends P/N 59-547 (12-conductor) color-coded multi-core cable. This cable includes 18 AWG conductors. Refer to page 10 for full cable specifications. Refer to figure 12, 14, 15 and 16 for color code and connection information. This raw-stock cable is used as extension wiring between a junction box and the burner management system. The maximum total cable length is 1000 feet (305 meters) per scanner.

Note: Model 95UVS4-1WINC, 95IRS4-1WINC, 95IRS4E-1WINC, and 95UVS4E-1WINC require p/n 59-608 (12-conductor) cable (59-497 Insight 1).

24 Volt DC Power Supplies

Fireye offers DIN rail mounted 24 Vdc power supplies for use with the InSight Series IV Integrated flame scanner. Model 60-2685-25 can power up to five InSight Series IV scanners and the 60-2685-50 can power up to ten InSight Series IV scanners (see note 1). Refer to bulletins CU-100 and CU-118 for details.

PART NUMBER	DESCRIPTION	NOTES	BULLETINS
60-2685-25	24 Vdc Switching Power Supply, 100-240 vac 50/60 Hz. input, 2.5 A output at 24 Vdc. Powers up to five scanners. Dimensions: 3.7"(95mm) high x 1.6" (40mm) wide x 4.3"(108mm) deep	1	CU-118
60-2685-50	24 Vdc Switching Power Supply, 100-240 vac 50/60 Hz. input, 5.0A output at 24 Vdc. Powers up to ten scanners. Dimensions: 4.5" (115mm) high x 2.0" (50mm) wide x 4.8" (121mm) deep.	1	CU-118

Notes:

1. Listed output is when power supply is vertically mounted, and with an ambient temperature of 104°F (40°C) maximum.

Scanner Cable with Female Connector, 59-547-x

Fireye offers 59-547 (12-conductor) cables in precut lengths with a female factory installed connector. These assemblies are offered in several lengths ranging from 3 meters (9 ft., 10 in.) to 90 meters (295 ft., 3 in.)

Table 1: SCANNER CABLES 59-547-x

PART NUMBER	DESCRIPTION	LENGTH	
		METERS	FEET
59-547-3	12-Conductor 3-meter cable assembly with 12-pin female connector.	3 meters	9 feet, 10 inches
59-547-6	12-Conductor 6-meter cable assembly with 12-pin female connector.	6 meters	19 feet, 8 inches
59-547-9	12-Conductor 9-meter cable assembly with 12-pin female connector.	9 meters	29 feet, 3 inches
59-547-12	12-Conductor 12-meter cable assembly with 12-pin female connector.	12 meters	39 feet, 4 inches
59-547-15	12-Conductor 15-meter cable assembly with 12-pin female connector.	15 meters	49 feet, 2 inches
59-547-30	12-Conductor 30-meter cable assembly with 12-pin female connector.	30 meters	98 feet, 5 inches
59-547-45	12-Conductor 45-meter cable assembly with 12-pin female connector.	45 meters	147 feet, 7 inches
59-547-60	12-Conductor 60-meter cable assembly with 12-pin female connector.	60 meters	196 feet, 10 inches
59-547-90	12-Conductor 90-meter cable assembly with 12-pin female connector.	90 meters	295 feet, 3 inches
59-547	12-Conductor cable **without connector**. Sold by the foot for use as extension cable from a junction box.	-	As required

SCANNER WIRING

To reduce electrical noise interference, take precautions to keep the scanner cable away from any high inductive wiring associated with high inductive loads or high voltage, high energy spark ignition systems.

CAUTION: The flame scanner requires 24 Vdc power for operation. Connection to a 24 Vac or 120/230 Vac power source will damage the scanner. Refer to wiring diagrams.

External 0.5 Amp slow-blow fuses are recommended to protect Flame Relay and Fault Relay contacts

All wiring to the scanner must be rated at 105°C. For runs less than 1000 feet, the use of Fireye Scanner Cable P/N 59-547, (12 wire) is recommended. For runs in excess of 1000 feet, consult the factory.

Figure 12:
InSight Series IV Quick Disconnect Wiring Connections (59-547 cable)

Connector Pin	Function 95UVS4-1 / 95IRS4-1	Function 95UVS4-2 / 95IRS4-2	59-547 Cable Color
1	24V Supply (+)	24V Supply (+)	Blue / Red stripe
2	24v Supply (-)	24v Supply (-)	Yellow / Black stripe
3	Fault Relay	Fault Relay	Red / Black stripe
4	4-20mA (+)	4-20mA (+)	Red / White stripe
5	RFS1	RFS1	Blue / Black stripe
6	RFS2	Flame Relay (NC)	Black / Yellow stripe
7	Comm (A)	Comm (A)	Brown / Orange stripe
8	Comm (B)	Comm (B)	Orange / Black stripe
9	4-20mA (-)	4-20mA (-)	Black / Orange stripe
10	Fault Relay	Fault Relay	Brown / Black stripe
11	Flame Relay (NO)	Flame Relay (NO)	Violet / White stripe
12	Flame Relay (Common)	Flame Relay (Common)	Orange / White stripe

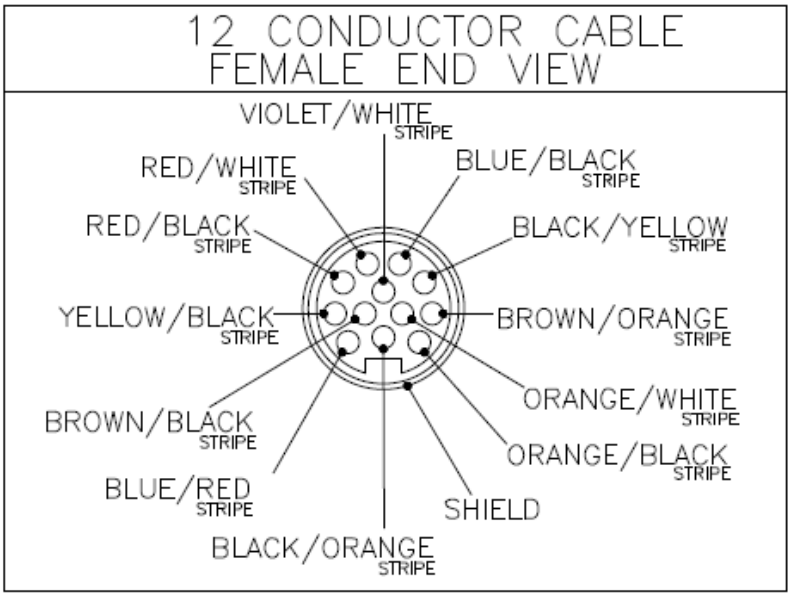

59-547-xx cable connector

Figure 13:
WIRING DIAGRAM: 95UVS4-1WINC, 95IRS4-1WINC (with 59-608 cable)

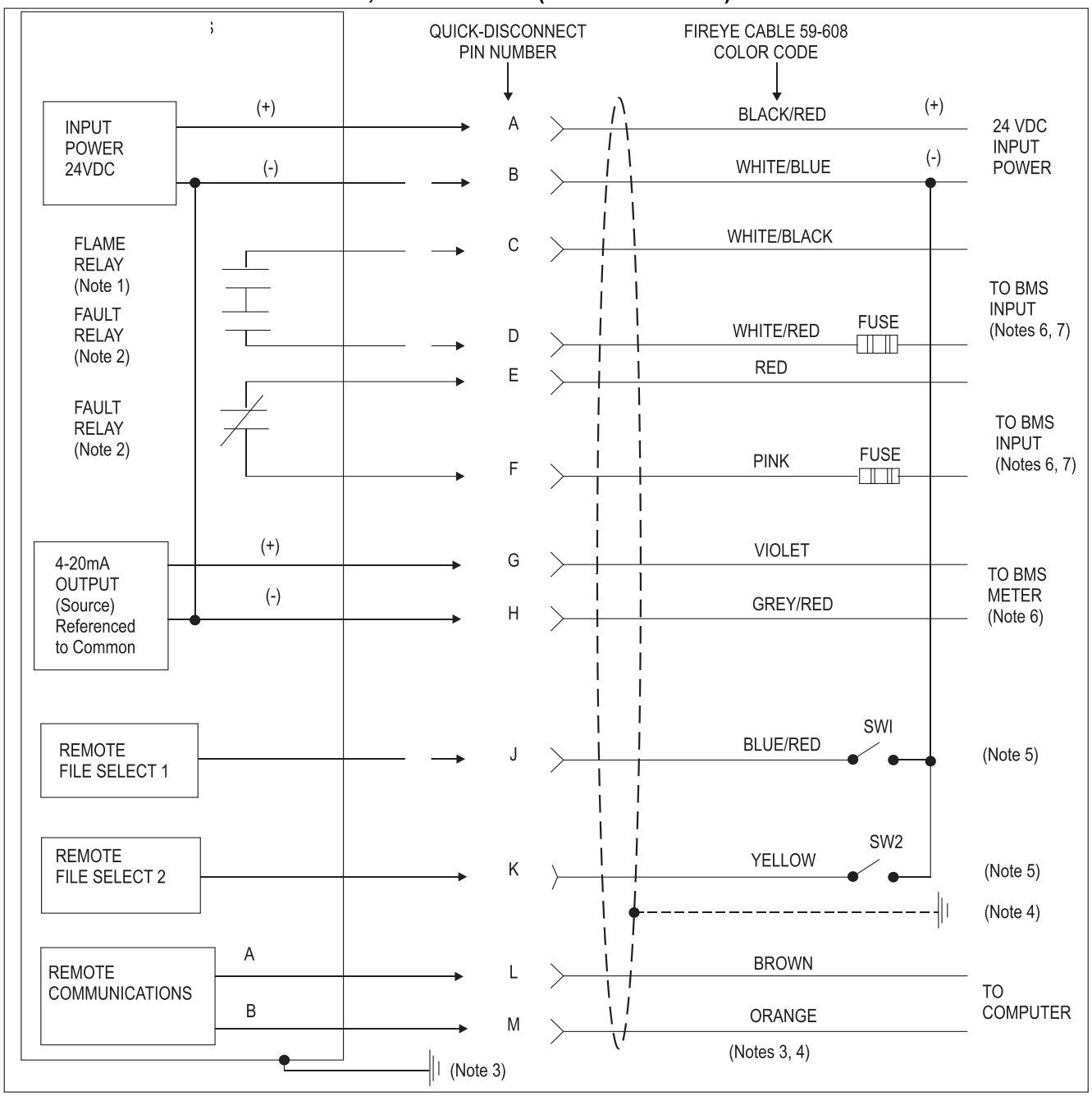

See Wiring Notes under Figure 15.

Figure 14:
WIRING DIAGRAM: 95UVS4-1, 95IRS4-1 (with 59-547 cable)

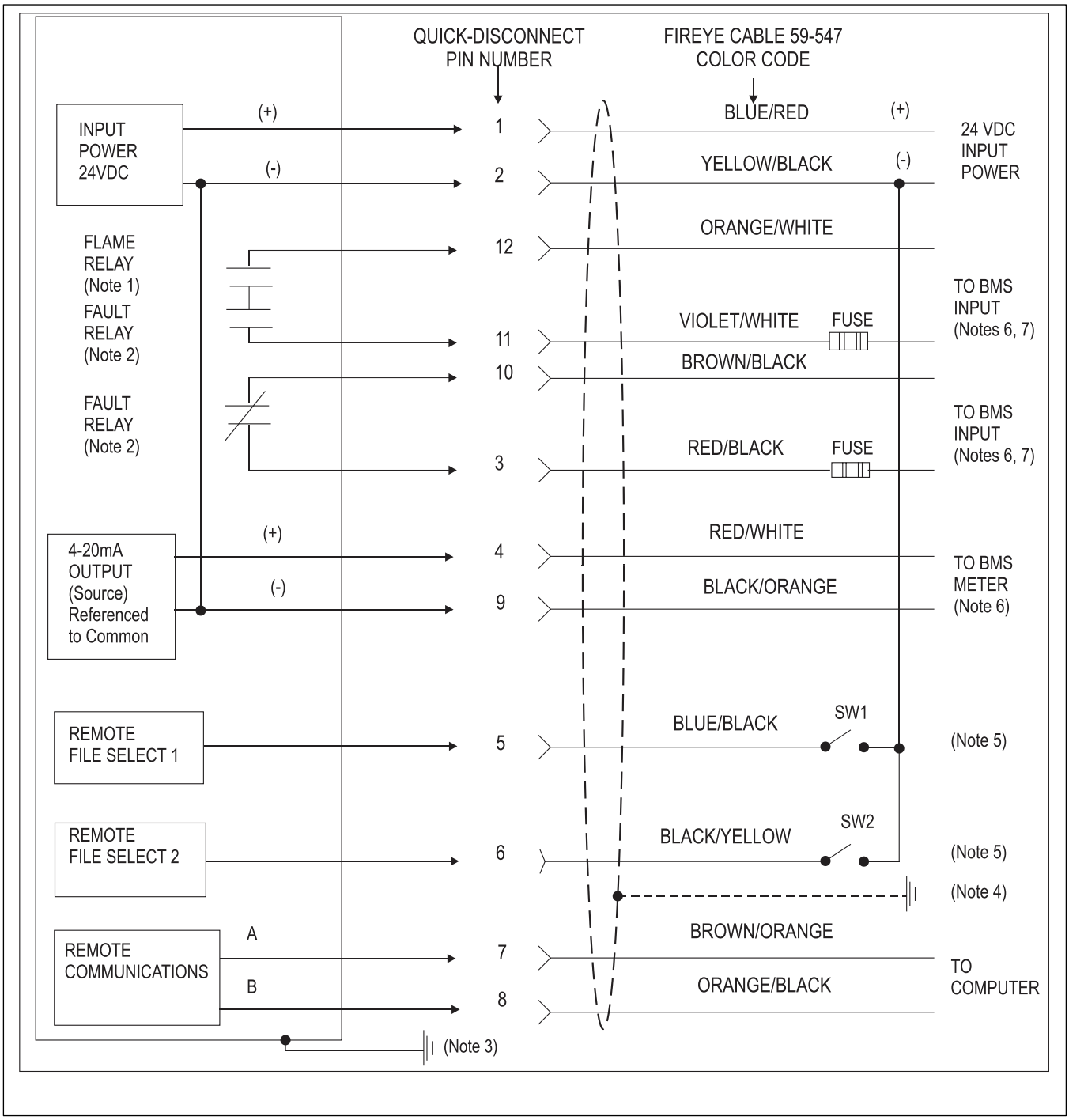

Figure 15:
WIRING DIAGRAM: 95UVS4-2, 95IRS4-2 (with 59-547 cable)

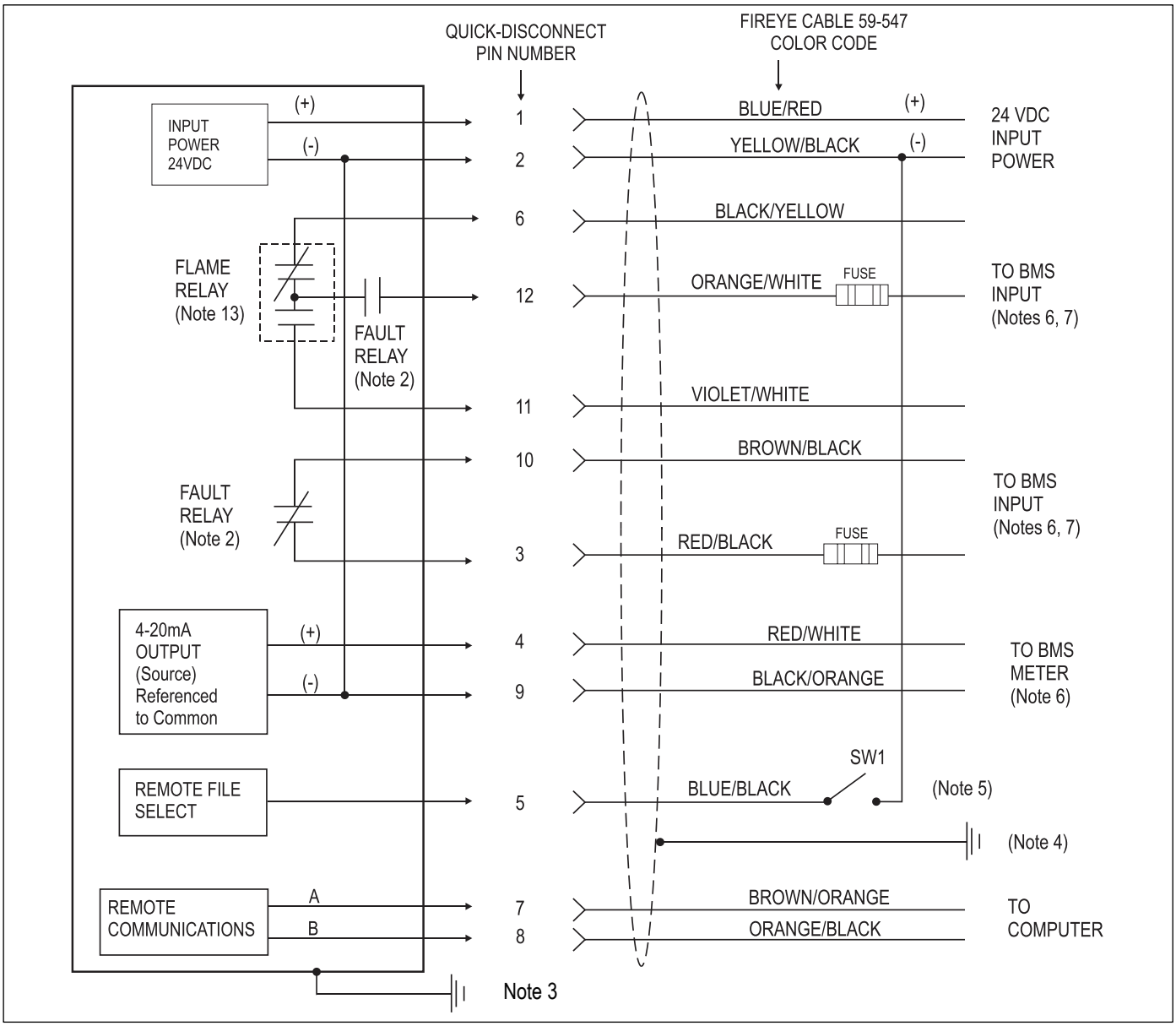

Notes:	
1. Flame relay contacts are shown in de-energized (no flame). 2. Fault relay contacts are shown in de-energized (fault condition). 3. A ground screw is provided on the scanner body. An external ground wire may be required by local codes. 4. Connect cable shield to earth ground at power source. 5. With Remote File Select programmed as “LINE”, external switches SW1/SW2 (not furnished) switch between internal memory files when connected to 24Vdc (-) supply SW2 (model -1 only). 6. BMS = Burner Management System (by others). 7. External 0.5 Amp slow-blow fuses recommended. 8. The scanner's 4-20 mA output is internally powered and must be connected to a passive (voltage-free) device. Do not connect to an externally powered 4-20 mA loop or the scanner may be damaged.	9. The return (-) for the customer's 4-20 ma device may be connected to either scanner pin B(2) or pin H(9). 10. The following peripherals must be SELV/PELV by an approval according to DIN EN 60950 or an external isolator must be used to provide an SELV system. - 24V power supply - RS485 - 4-20mA wiring - Remote file select monitoring - Relay contacts 11. The –WINC version must use either the 59-608 cable or cable rated for the appropriate hazardous location. 12. The -2 models’ scanners (e.g., 95UVS4-2) provide a Form C (NO / NC) flame relay output contact.

FIGURE 16. **WIRING FOR 95UVS4-1CEX and 95IRS4-1CEX scanners (shown with housing cover removed))**

TB1

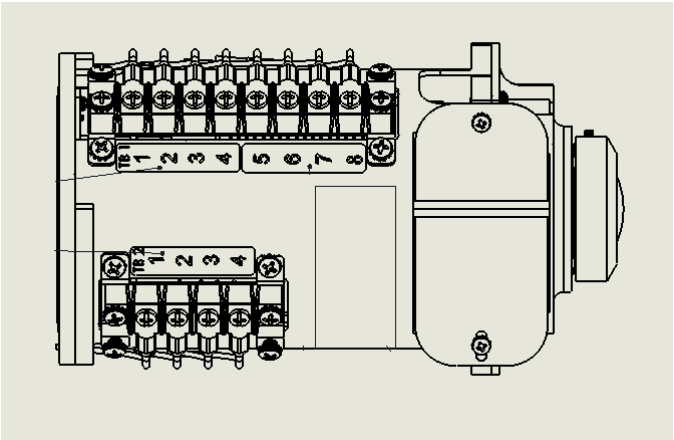

TB2

Connector Pin	Function for -1 Version	Function for -2 Version	59-547 Cable Color (if used)
Terminal Block 1 (TB1)			
TB1-1	RFS2	Flame Relay NC	Black/Yellow stripe
TB1-2	RFS1	RFS1	Blue/Black stripe
TB1-3	Comm (A)	Comm (A)	Brown/Orange stripe
TB1-4	Comm (B)	Comm (B)	Orange/Black stripe
TB1-5	4-20mA (+)	4-20mA (+)	Red/White stripe
TB1-6	4-20mA (-)	4-20mA (-)	Black / Orange stripe
TB1-7	24V Supply (-)	24V Supply (-)	Yellow/Black stripe
TB1-8	24V Supply (+)	24V Supply (+)	Blue/Red stripe
Terminal Block 2 (TB2)			
TB2-1	Fault Relay NC	Fault Relay NC	Brown/Black stripe
TB2-2	Fault Relay COM	Fault Relay COM	Red/Black stripe
TB2-3	Flame Relay COM	Flame Relay COM	Orange/White stripe
TB2-4	Flame Relay NO	Flame Relay NO	Violet/White stripe

REMOTE FILE SELECTION

The InSight Series IV scanners have four (A, B, C, D) programmable memory files. The user has the option of storing different scanner setpoints for different operating conditions (e.g., Gas / Oil, Pilot / Main, Low Fire / High Fire, etc.) in these files. With RFS selected as "*Line Inputs*", one or two external switches (supplied by user) will select between the files when the RFS1 or RFS2 wires are connected to 24 Vdc (-).

RFS1 (Blue/Black stripe)	RFS2 (Black/Yellow stripe)	File Selected
Open	Open	A
Closed	Open	B
Open	Closed	C
Closed	Closed	D

The default is *RFS = "Keypad"* which allows manual file selection at the scanner keypad only. The user may also select *RFS = "Comms"* which will allow manual selection at a remote computer running Fireye software. Fireye recommends the use of shielded cable for the two remote file select switches (or relays). The switch contacts should be rated for low current operation (3mA dc).

The InSight Series IV can be programmed to automatically switch between file A and file B after a set period of time (*RFS = "Flame Relay"*). This is described in detail in the menu section below. The expected purpose is for flame scanner monitoring between the states of pilot flame on and main flame on as they are sequenced by the burner control.

WIRING FOR REMOTE COMMUNICATIONS

Remote communications with the InSight Series IV scanner uses an RS485 Interface to carry the communication signals. A Windows® compatible PC running Fireye software is required to communicate with the flame scanners, see CU-109. **The wiring configuration for remote communications is dependent on the distance between the scanner and the control room.**

For distances less than 200 feet, wire the Fireye cable P/N 59-547 to the female quick disconnect in the manner previously described, and run the cable directly back to the burner management system.

For wiring distances when the InSight Series IV scanner to the control room is greater than 200 feet, remote communications require wiring a twisted, shielded pair of wires in a "multi-drop" wiring configuration. If communications problems occur, use a terminating resistor at the scanner located farthest from the communication source.

***Note**: The maximum distance for the communication wiring for all associated InSight scanners is 1,000 feet at 19200 baud. The maximum number of scanners connected to the communication link is 32 scanners. Exceeding this total wiring length or number of scanners requires the installation of bi-directional repeaters or amplifiers. Consult the factory for additional information.*

FIGURE 17. WIRING FOR REMOTE COMMUNICATIONS

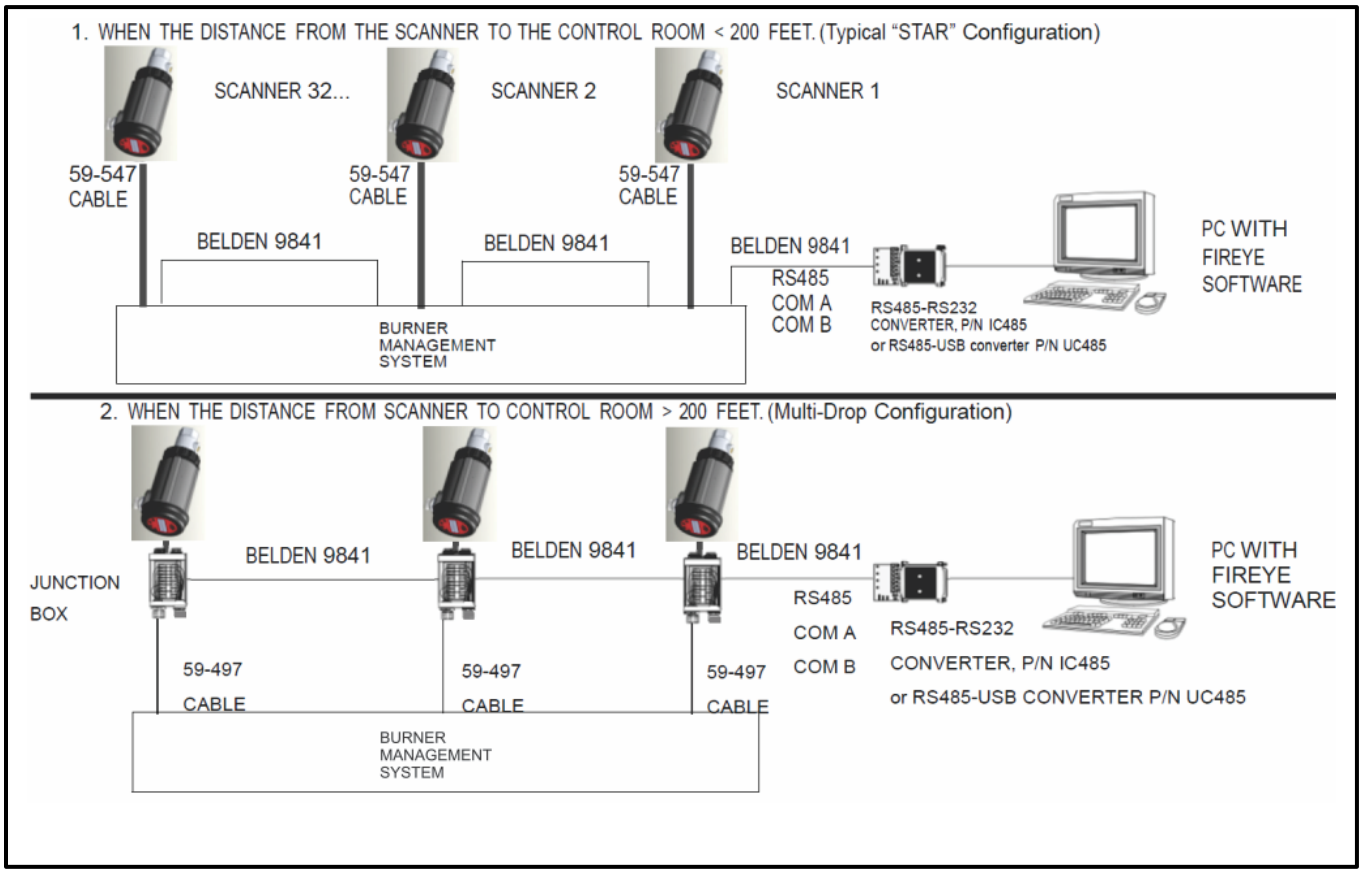

GROUNDING AND SHIELDING TECHNIQUES

FOR USE ON SCANNERS OR SCANNER CABLE LOCATED WITHIN 12" OF A HIGH ENERGY OR HIGH VOLTAGE SOURCE.

1. Connect a safety ground to scanner housing (Figure 13, 14 & 15).
2. The scanner and scanner cable MUST be located at least 12" from the ignition source.
3. Run a ground wire from the ignition transformer chassis to the ignitor assembly.
4. Replace all frayed, cracked, or dirty (oily) ignition wire. Ignition wire must be in good working condition.
5. Electrically isolate the scanner from the burner using the surface mounting flange with integral heat-insulating female thread insert.
6. Cooling/Purge Air must be electrically isolated from the scanner (e.g., isolated short rubber hose).

SCANNER TO CONTROL ROOM	SHIELDING TECHNIQUES
Scanner with scanner cables (59-547) wired directly back to burner management system. See below for remote communications.	Connect braided shield of 59-547 or (59-608 for -1WINC) cable to earth ground at power supply.
REMOTE COMMUNICATIONS: LESS THAN 200 FEET	
Scanner with scanner cables (59-547) wired directly back to control room.	Connect braided shield of 59-547 (or 59-608 for -1WINC) cable to earth ground at power supply.
REMOTE COMMUNICATIONS: GREATER THAN 200 FEET	
RS485 communications for scanners wired in a multi-drop configuration (Belden 9841) using wiring harness or junction box.	Connect braided shield of 59-547 (or 59-608 for -1WINC) to earth ground at power supply. Twist together and tape (to electrically isolate) shield drains from Belden 9841 cables inside each wiring harness or junction box. Connect to earth ground at RS485 source (e.g., IBM computer).

PROGRAMMING THE INSIGHT Series IV SCANNER

Keypad/Display:

The InSight Series IV flame scanner uses a two (2) line x six- teen (16) character alphanumeric OLED Display and five (5) pushbuttons to review and program the various setpoints and operating parameters. The functions of the pushbuttons are:

UP/DOWN

The UP and DOWN buttons are used to scroll through the scanner menus. When in the CONFIG menu, after selecting a setpoint to edit, (see SELECT button), the UP and DOWN buttons are used to change that setpoint.

SELECT

When in the CONFIG menu, the UP / DOWN buttons are used to display the setpoints. Depressing the SELECT button displays the stored value of the setpoint, allowing it to be changed.

PROGRAM

The PROGRAM button saves a change made to a setpoint. It is also used to execute the Auto Tune function.

Note: Depressing and Holding the PROGRAM key for four (4) seconds will cause the scanner to RESET (flame relays and fault relay will de-energize). Normal operation will be restored once the PROGRAM button is released.

HELP

Pressing the Fireye logo will display expanded text in the Main Status Menu.

INSIGHT Series IV MENU STRUCTURE

For ease of operation, the InSight Series IV scanner contains five primary menus (or loops) accessed via the keypad and viewed on the scanner's display.

1. MAIN STATUS MENU

The Main Status menu is the default display. Use the UP and DOWN buttons to scroll through the menu and view the current operating status. No operating parameters can be changed from the Main Status menu. To change any setpoint, you must select the Configure Menu option and then enter a four-digit password to enter the Configuration menu. Error History can also be viewed from the Main Menu.

Note: When power is applied, the following splash screen is displayed for 2 seconds:
"Display CRC=xxxx, Display Rev= xx".
After 2 seconds, the display will revert to the first display of the Main Status menu:
"FR=CLOSED, File=A, FS=185, FQ=100".

2. CONFIG MENU

The Config Menu accesses all of the sub-menus, and setpoints for the InSight Series IV scanner. The Config menu is entered from the Main menu after first entering a four-digit password (Default is 0205). From the CONFIG menu the user can enter the AUTOMATIC CONFIG and MANUAL CONFIG and other menus.

3. AUTOMATIC CONFIG MENU

From the Automatic Config Menu, the user views the flame signal intensity while physically aiming the scanner for optimum signal. With the target burner ON (firing), and the scanner properly aimed, the user can command the InSight Series IV scanner to "Learn" the Flame ON condition. With the target burner OFF (not firing), the user can command the InSight Series IV scanner to "Learn" the Flame OFF condition. The scanner will then automatically select the optimum flame relay and sensor setpoints. The Automatic Config Menu is entered from the CONFIG menu.

4. MANUAL CONFIG MENUS

From the Manual Config Menu, the user would select the desired FFRT (Flame Failure Response Time), and On Time Delay for the flame relays. From this menu, the user may also manually adjust all other flame relay and sensor setpoints. The Manual Config Menu is entered from the CONFIG menu.

FIGURE 18. **INSIGHT Series IV SCANNER MENU STRUCTURE**

THE MAIN STATUS MENU

FIGURE 19. **MAIN STATUS MENU LOOP**

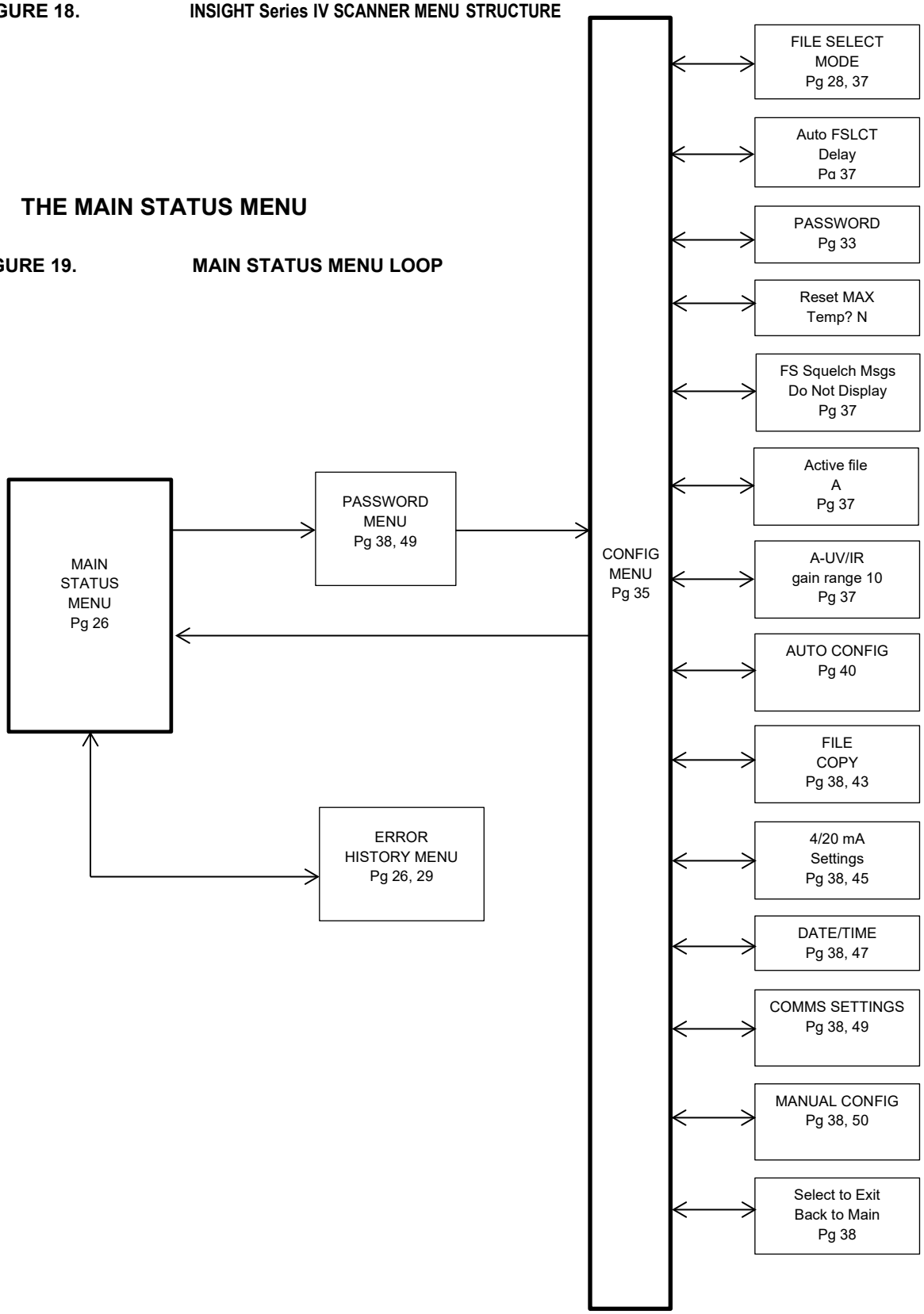

THE MAIN STATUS MENU

FIGURE 20. MAIN STATUS MENU LOOP

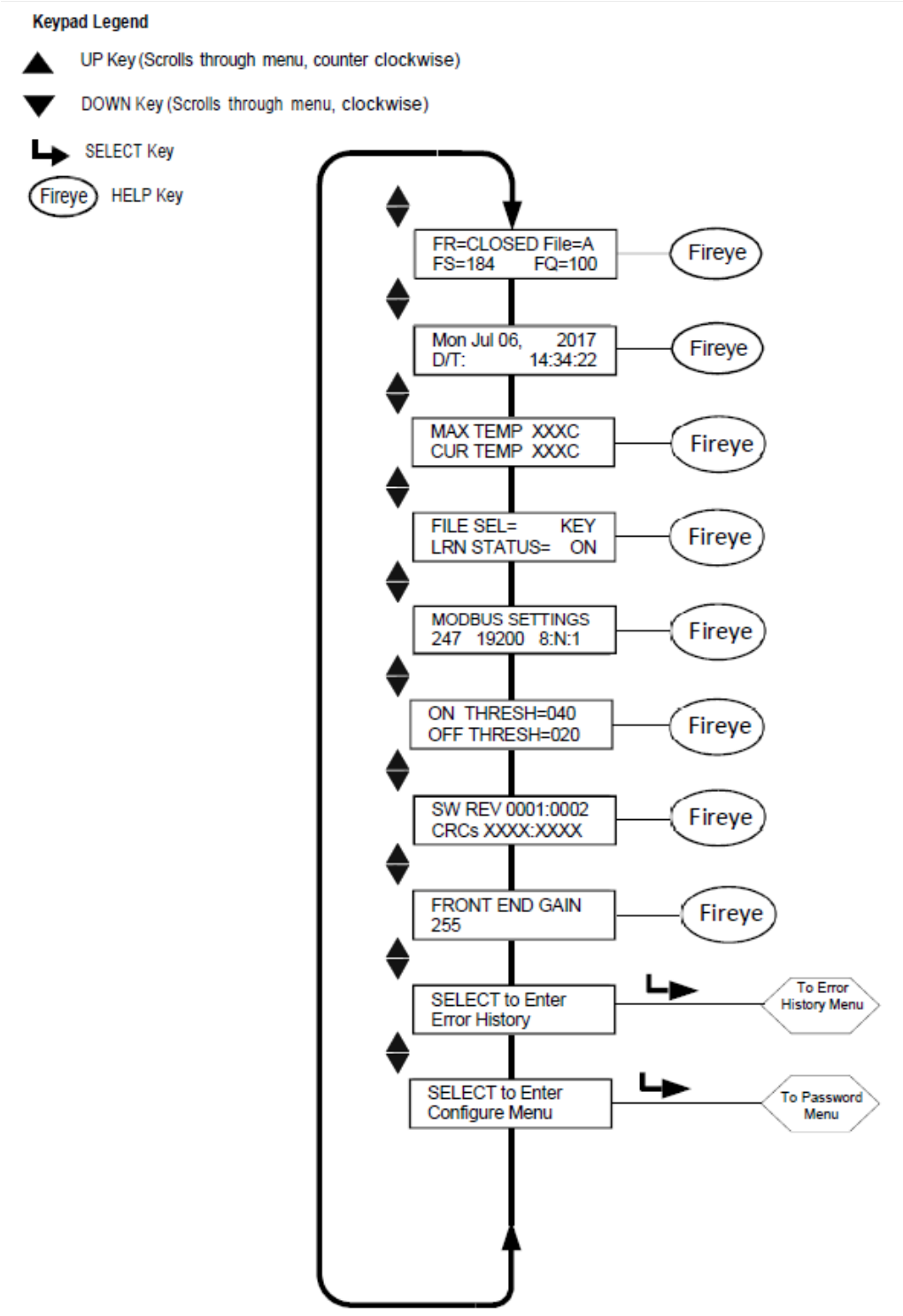

THE MAIN STATUS MENU

***Note*:** **HELP** text information for many main menu functions is displayed when you press the Fireye logo. The text will appear in the display for 3 seconds. If there are multiple lines of help information available, it will appear on sequential screens.

The first display in the Main Status Menu shows Flame Relay status (Open or Closed) and the File selected (File=x) on the first line. The Flame Signal (FS=xxx) and Flame Quality (FQ= xxx) are shown on the second line.

Flame Relay Open/Closed

This item refers to the status of the flame relay contacts. FR=CLOSED is displayed when the flame quality rises above the On Threshold set in the Config Menu. When the flame quality drops below the relay Off Threshold, FR=OPEN will be displayed.

File Selected

(File=x) displays the current running file. Four file choices are available (A, B, C, D).

Flame Signal Strength

The Flame Signal (FS=xxx) number represents the intensity of the Flame Flicker as sensed by the IR or UV sensor and is a function of the individual sensor Gain and Bandpass (flicker frequency) settings. The Flame Signal Strength number is related to the Flame Quality number but has a value of 0-999.

Important Note: The Flame Quality number is the Flame Signal number but is capped at 100.

Example:

If flame signal strength is displayed as “FS=085”, the Flame Quality number would be displayed as “FQ=085”.

If flame signal strength is displayed as “FS = 174”, the Flame Quality number would be displayed as “FQ=100”.

Flame Quality

The “Flame Quality” number (FQ=xxx) can range from 0 to 100. The “Flame Quality” number is determined by the flame signal strength of the IR or UV sensor – see above.

For clarity, the “Flame Quality” number is capped at 100, while under certain firing conditions, the IR or UV flame signal strength may normally exceed 100 (maximum of 999).

In normal burner operation after the scanner has been properly setup, “FQ 100” will be displayed with occasional movement depending on the stability of the flame.

Important Note: The Flame Quality number is the Flame Signal number but is capped at 100. It is determined by the IR or UV Flame Signal Strength value.

Date/Time

The current Date and Time of day is displayed. If the scanner is powered off for more than 36 hours, this information will revert to system default values (Jan. 1, 2017) and the current Date and Time must be re-entered.

Maximum Temp

(MAX TEMP) This displays the highest internal scanner temperature recorded. This value toggles between degrees Fahrenheit and Celsius.

Current Temp

(CUR TEMP) This displays the current internal temperature of the scanner unit. This value toggles between degrees Fahrenheit and Celsius.

File Select Mode

The File Select options are: Keypad, Line Inputs, Flame Relay A-B and Modbus (Comms).

File Sel Mode=Keypad indicates the file selection is made via keypad.

File Sel Mode=Line Inputs indicates the file selection is made via RFS 1 and RFS 2. **Note**: -2 models (e.g., 95UVS4-2) only provide RFS1

File Sel Mode=Flame Relay A-B indicates File A is active until the flame relay is energized. Then File B is active after the time delay as determined by setpoint AUTO FSLCT DELAY (See Config Menu). See Application Note on page 41.

File Sel Mode=Modbus (Comms) indicates file selection is made via Modbus communication.

Learn Status

Status values can be MAN, ON, OFF, or BOTH. (See note)

MAN: Manual mode, no Learning done, or USER has changed at least ONE of the learned parameters.

ON: Learn ON is done, OFF is not done.

OFF: Learn OFF is done, ON is not done.

BOTH: Both Learn ON and OFF have been done. (See note)

***Note**: If a user conducts both a Learn On and a Learn Off, then changes any value effecting the flame calculations, the status will read MANUAL.*

ModBus Comms

This screen indicates the remote communications address, baud rate, bits, parity, and stop bit. The address can range from 1 to 247, as selected in the Config Menu. No two scanners in a communications loop should have the same address. Default comm values are: “247 19200 8:N:1”, indicating address 247, 19200 baud, 8 bits, No parity, 1 stop bit.

Flame Relay Threshold

The flame relay has a factory programmed FLAME ON threshold of 40, and a FLAME OFF threshold of 20 (0-100 scale). Other ON and OFF thresholds may be programmed to suit particular applications.

On Threshold

Flame ON threshold (ON THRESH=xxx) This refers to the “pull-in” threshold of the internal Flame Relay in terms of Flame Quality. The ON threshold can be set from 5 to 100. The ON threshold must be at least 5 units higher than the OFF threshold. When the flame quality is equal to or greater than the ON threshold (for a time equal to the On Time Delay setting), the flame relay will energize. The On Threshold Factory default is 40 (ON THRESH = 040)

Off Threshold

Flame OFF threshold (OFF THRESH = xxx). This refers to the “drop-out” threshold of the internal flame relay in terms of Flame Quality. The OFF threshold can be set from 0 to 95. The OFF threshold must be at least 5 units lower than the ON threshold. When the Flame Quality is equal to or less than the OFF threshold (for a time equal to the Flame Failure Response Time setting), the flame relay will de-energize. The Off Threshold Factory default is 20 (OFF THRESH = 020)

Software Revision

This displays the current internal software revision (e.g.: SW REV 0033:0010)” and Cyclic Redundancy Check “CRC”.

Front End Gain

The InSight Series IV scanner has automatic gain control circuitry that continuously adjusts the scanner's Front-End Gain (FEG). The purpose is to keep the raw flame signal within measurable limits. The FEG value can range from 5 to 255. The current "real-time" Front End Gain value is displayed on this screen. The “real-time” FEG can be tracked via the 4-20mA analog output. Refer to Config Menu.

With a very weak dim flame (or in darkness) the automatic gain control circuit would increase the FEG, (up to a maximum value of 255). With a very bright flame, the automatic gain control would decrease the FEG, (down to a minimum value of 5).

The scanner stores the current real-time FEG value any time a Learn Flame ON procedure is performed. **To assist in proper flame discrimination, the Flame Quality number will be automatically reduced whenever the real-time FEG value is higher than the Learned FEG value.**

Example: If the Learned FEG value was 20, and the real-time FEG is now 40, (indicating a *dimmer* flame), the scanner will *decrease* the Flame Quality number by 50% (20/40). However, if the Learned FEG value was 20, and the real-time FEG is now 10, (indicating a *brighter* flame), the Flame Quality number will not be affected.

Select To Enter Error History

Press Select Key to enter the Error History screen to view error status and codes. The most recent Error is displayed first. It also tells the NUMBER of errors that have occurred to date. The date and time of each error is displayed along with the Caller and Reason number. The Error menu displays the last 10 errors, then cycles back around to the top level. In the event that an internal scanner fault is detected, the scanner will turn off its output and an error code will appear on the display.

To clear the error code and restart the scanner, either the 24 Vdc power can be cycled off then on, or the PROGRAM key can be depressed and held for four (4) seconds.

Note: Depressing and Holding the PROGRAM key for four (4) seconds will cause the scanner to RESET (flame relays and fault relay will de-energize). Normal operation will resume once the PROGRAM button is released. (FACTORY RESET)

THE ERROR HISTORY MENU

FIGURE 21. ERROR HISTORY MENU LOOP

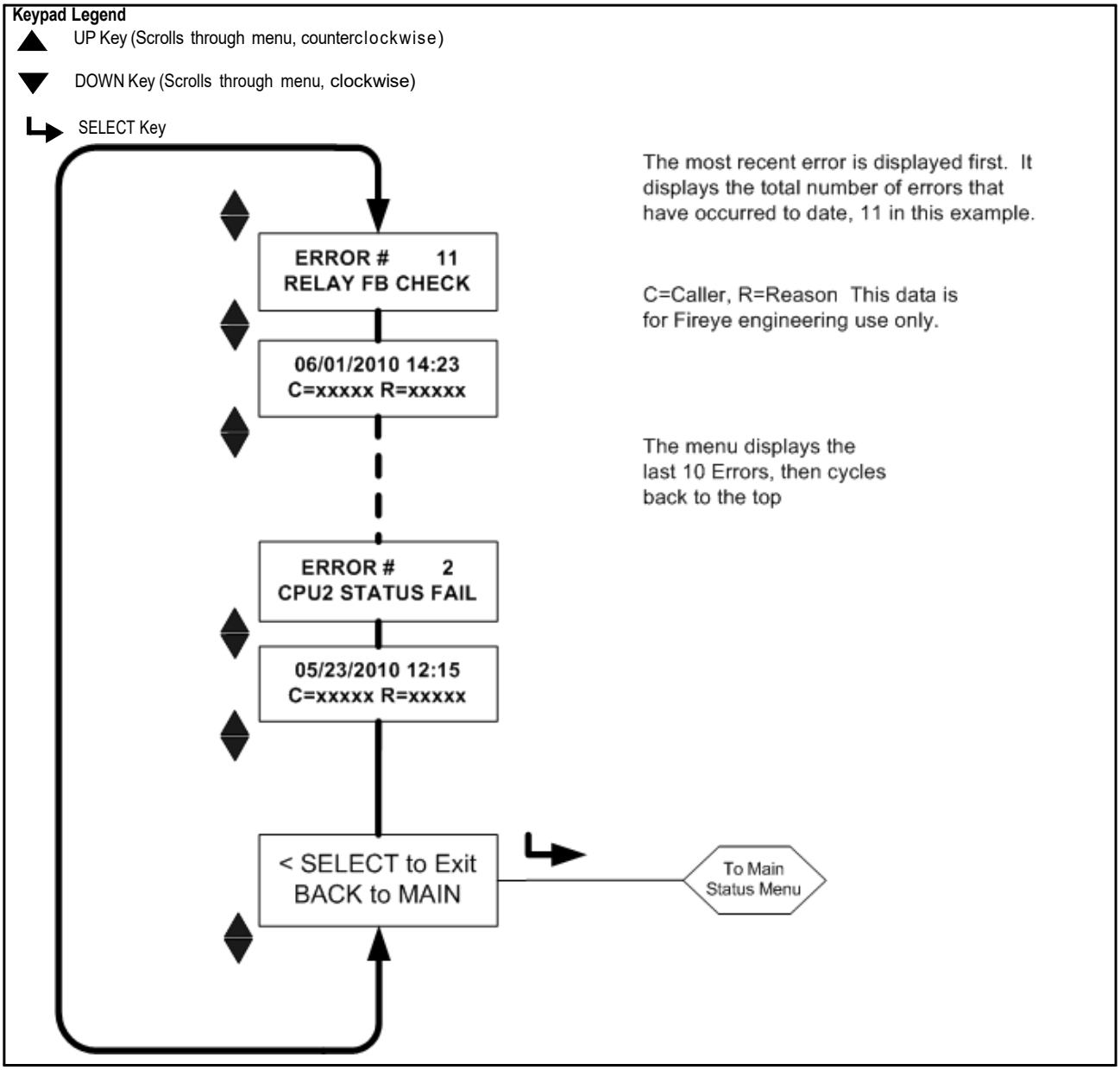

Internal Error Messages

DISPLAYED WHEN ERROR OCCURS	DISPLAYED LATER IN ERROR HISTORY MENU
INTERNAL STORAGE R/W ERROR	FRAM WRITE FAIL
INTERNAL STORAGE R/W ERROR	FRAM READ FAIL
WATCH DOG FAILURE	WATCH DOG FAIL
INTERNAL RAM CHECK FAILURE	RAM TEST FAIL
INTERNAL RAM CHECK FAILURE	BI RAM TEST FAIL
INTERNAL VOLTAGE CHECK FAILURE	VOLTAGE TEST
RELAY FEEDBACK CHECK FAILURE	RELAY FB CHECK
INTERNAL CPU1 INIT FAILURE	FAILED INIT
INTERNAL STORAGE MEMORY CORRUPTED	INVALID FRAM
INTERNAL STORAGE MEMORY CORRUPTED	WRONG FRAM REV
INTERNAL CPU2 STATUS FAILURE	CPU2 STATUS FAIL
INTERNAL CPU1 CRC FAILURE	CRC ERROR
CONFIGURATION CHECK FAILED	CONFIG ERROR
CPU1 SELF CHECK FAILED TEST # xx	SELF CHECK ERROR
GENERAL FIRMWARE CHECK FAILED	GENERAL ERROR
LOCKOUT UNDEFINED ERROR	UNKNOWN REASON

Warning Messages

In the event of an abnormal operating condition the scanner will automatically display a warning message informing the user of the condition. The warning message will be displayed for two (2) seconds, then the standard status message will be displayed for ten (10) seconds. This pattern will be repeated until the abnormal condition no longer exists, or until the user depresses any key. If the user depresses any key, the warning message will be suppressed for thirty (30) seconds.

Group I Warning Messages (Always Active)

Warning Message	Condition	Effect
TOO COLD < -40C Currently –xxC FLAME SIGNAL SET TO 0	The scanner's internal temperature has fallen to -40C (-40F), or below. Note: There is a 2°C hysteresis window (-38°C) until cold warning displayed.	Flame signal is driven to zero. The Flame and Fault relays will be de-energized.
COLD WARNING Currently –xxC	The scanner's internal temperature has fallen to -35C (-31F) or below	The Fault relay will be de-energized.
HOT WARNING Currently +xxC	The scanner's internal temperature has risen to +80C (+176F), or higher	The Fault relay will be de-energized.
TOO HOT > 85C Currently +xxC FLAME SIGNAL SET TO 0	The scanner's internal temperature has risen to +85C (+185F), or higher. Note: There is a 2°C hysteresis window (83°C) until hot warning displayed.	Flame signal is driven to zero. The Flame and Fault relays will be de-energized
IR SENSOR IS SATURATED	The steady (DC) component of the IR source is too strong (the flame is too bright). The scanner cannot properly detect the flame flicker. (See note 3).	The IR flame signal will become erratic or go to zero.

Group II Warning Messages (Can be suppressed, see Note 1)

Warning Message	Condition	Effect
FRx IR FEG LESS THAN MINIMUM	The IR FEG (Front-End-Gain) has dropped below the MIN value selected by the user in the IR Settings Menu (see Note 2).	The IR flame signal is driven to zero.
FRx IR FEG GREATER THAN MAXIMUM	The IR FEG (Front-End-Gain) has risen above the MAX value selected by the user in the IR Settings Menu (see Note 2).	The IR flame signal is driven to zero.
FRx UV FEG LESS THAN MINIMUM	The UV FEG (Front-End-Gain) has dropped below the MIN value selected by the user in the UV Settings Menu (see Note 2).	The UV flame signal is driven to zero.
FRx UV FEG GREATER THAN MAXIMUM	The UV FEG (Front-End-Gain) has risen above the MAX value selected by the user in the UV Settings Menu (see Note 2).	The UV flame signal is driven to zero.
FRx FAILED THE IR LIGHT CHECK	The IR source is likely not a real flame. The scanner uses a “single-source” light check to reject incandescent or fluorescent light sources.	The IR flame signal is driven to zero.
FRx FAILED THE UV LIGHT CHECK	The UV source is likely not a real flame. The scanner uses a “single-source” light check to reject incandescent or fluorescent light sources.	The UV flame signal is driven to zero.
TOO MUCH IR SIGNAL	The flickering (AC) component of the IR source is too strong. The scanner cannot properly detect the flame flicker. (See note 3).	The IR flame signal will become erratic or go to zero.
TOO MUCH UV SIGNAL	The flickering (AC) component of the UV source is too strong. The scanner cannot properly detect the flame flicker. (See note 3).	The UV flame signal will become erratic or go to zero.

Notes

1. Group II Warning messages are suppressed whenever “Do NOT Display” is selected under the FS Squelch Msgs parameter in the CONFIG menu. This is the default setting. Although the *message* will be suppressed, if the Group II Warning *condition* exists, the appropriate flame signal will still be driven to zero. To display the Warning messages, select “Display” under the FS Squelch Msgs parameter.

2. An “FEG” Warning condition would occur if the user had manually changed the MIN or MAX value for the FEG range in the IR or UV Settings Menus. The default settings for these parameters are 5 and 255 respectively.

3. Excess signal for a UV or IR sensor (depending on the scanner model) will be reduced by setting the Sensor’s (IR or UV) Gain Range during AIM to a lower Setting. See Figure 25 on page 40. Additionally, installing a sight pipe orifice will also lower the measurable UV or IR flame signals.

Select To Enter Configure Menu

Pressing the Select Key at this prompt will bring you to the Password Entry Screen before accessing the Configuration menu. The Configuration Menu will allow the user to select File Select Mode, Auto Flame Relay Select Delay, Enter / Change Password, Reset Max Temp, FS Squelch Mgs, Active File, Gain Range (IR or UV – depending on flame scanner).

From the Config Menu, the user can enter the following menus: Automatic Configuration, File Copy, 4-20mA Settings, Date/Time, COMMs Settings, and Manual Configuration menus as well as Select to exit back to Main.

THE PASSWORD MENU

FIGURE 22. PASSWORD MENU LOOP

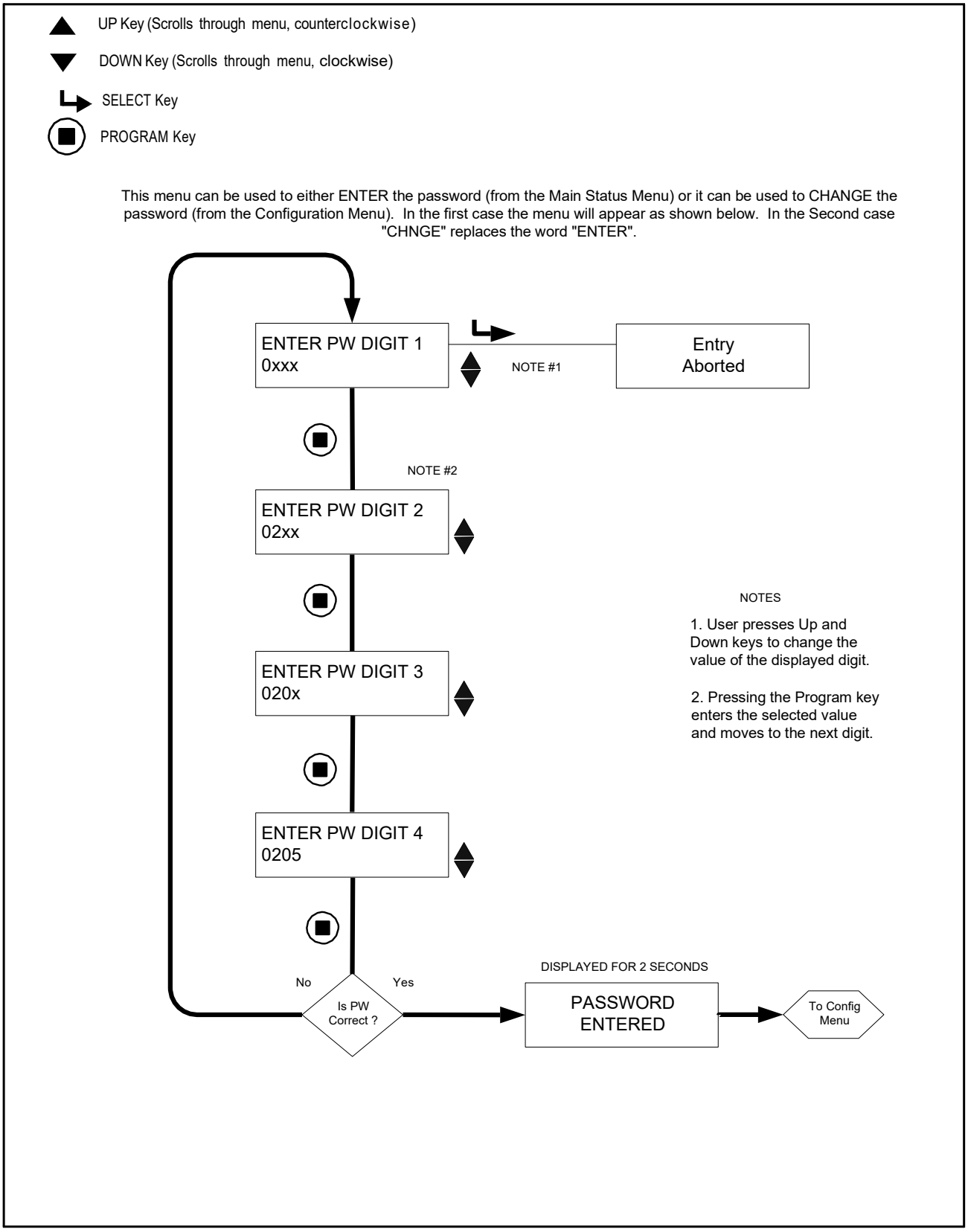

THE PASSWORD MENU

Password

A four-digit Password is required to enter the CONFIG menus. If a Password is not entered, pressing the SELECT key will display “Entry Aborted” and goes back to “Select to Enter Configuration Menu”.

To enter the CONFIG menus, you must enter the four-digit Password. **The following example is for the factory installed password of 0205:**

1. With “SELECT to Enter Configure Menu” displayed, depress the SELECT key. “0xxx” will be displayed, the first digit (“0”) is adjustable. (If the factory password was changed, use the UP/DOWN keys to select the appropriate first digit).
2. With the first digit selected (e.g., “0xxx”) depress the PROGRAM key. “00xx” will be displayed, the second digit (“0”) is adjustable. Depress the UP key twice to display “2”. (If the factory password was changed, use the UP/DOWN keys to select the appropriate second digit).
3. With the second digit selected (e.g., “02xx”) depress the PROGRAM key. “020x” will be displayed, the third digit (“0”) is adjustable. (If the factory password was changed, use the UP/DOWN keys to select the appropriate third digit).
4. With the third digit selected (e.g., “020x”) depress the PROGRAM key. “0200” will be displayed, the fourth digit (“0”) is adjustable. Depress the UP key five times to display “5”. (If the factory password was changed, use the UP/DOWN keys to select the appropriate fourth digit).
5. With all four digits selected (e.g., “0205”) depress the PROGRAM key.

If the Password was not entered correctly, the display will return to “ENTER PW DIGIT 1”. Use the UP/DOWN keys to select the appropriate first digit.

If the Password was entered correctly, the display will read “PASSWORD ENTERED. To change the password, Press DOWN key once to PASSWORD. If you wish to change the password at this time, Press the SELECT key see the “Change Password” section below. Otherwise, depress the DOWN key to advance to the CONFIG menus.
Entering the correct Password allows the user 20-minute access to the CONFIG menus. Saving any parameter will re-start this 20-minute time-out period. When the user returns to the MAIN STATUS menu, the password will immediately expire. The password must be re-entered if it is necessary to return to the CONFIG menu.

Change Password

The user may change the password **(the factory set password is “0205”)** to any four-digit code desired. To change the password, you first enter the current password as described above.

Scroll until the display reads “PASSWORD”. Press SELECT and “CHNGE PW DIGIT 1 0xxx” is displayed. The first digit “0” is adjustable. For example, to enter a NEW password of “1357”, use the UP/DOWN key and the PROGRAM key as described in the above section. When complete, the display will briefly read “PASSWORD CHANGED 1357”.

Removing Password Protection

The user may choose to disable / remove password protection for an extended period of time during commissioning, and then restore password protection at a later time when commissioning is complete.

To remove password protection, first enter the current password, and then change it to "0000" following the steps described in the Change Password section above. When the password has been changed to "0000", the user will no longer be prompted to enter a password to gain access to the CONFIG menus.

To restore password protection, enter the CONFIG menu and depress the DOWN key until "PASSWORD 0000" is displayed. Press the SELECT key and follow the steps described in the Change Password section above to change from "0000" to either the as-shipped password of "0205", or to any other four-digit code desired.

THE CONFIG MENU

FIGURE 23. CONFIG MENU LOOP

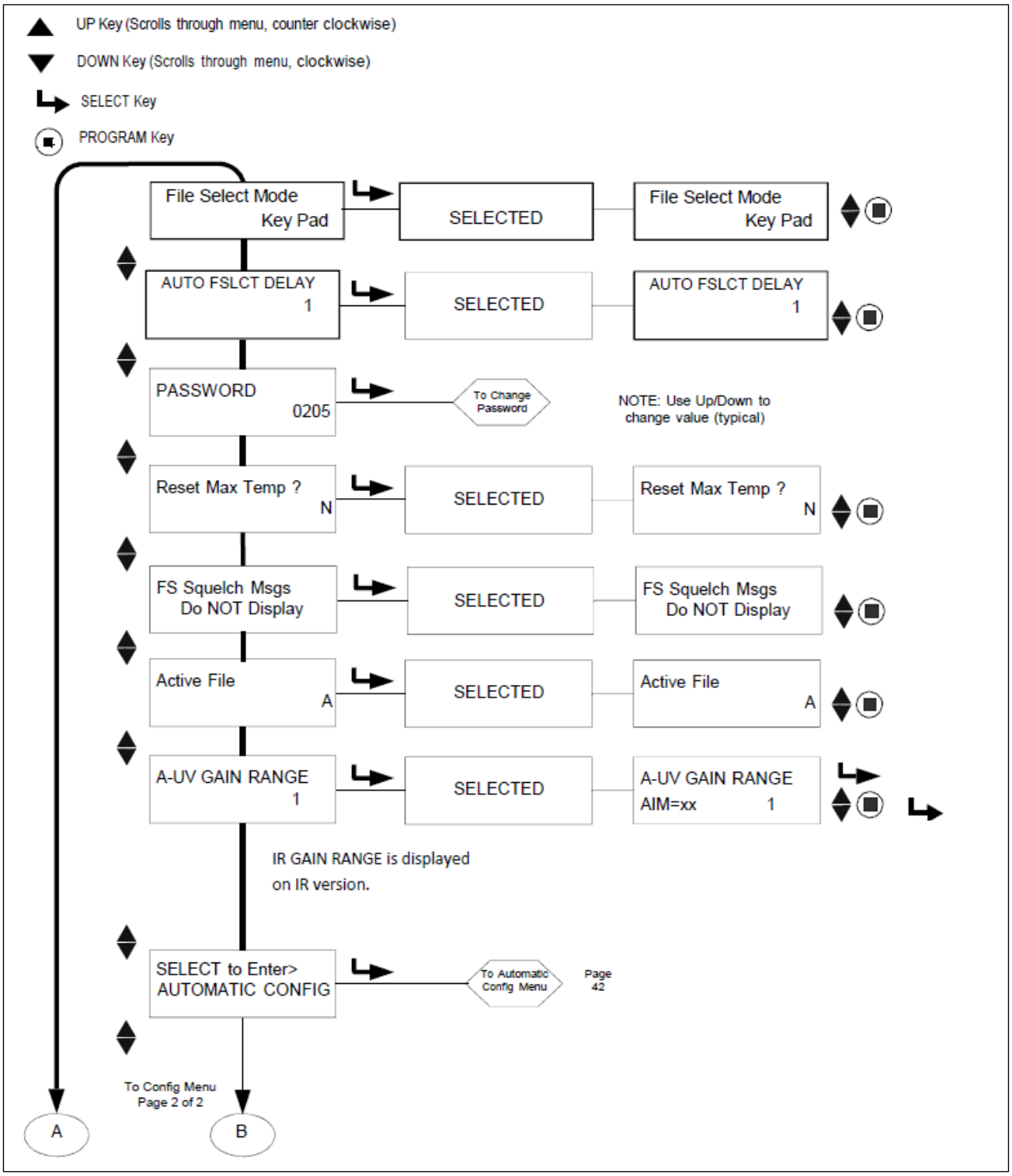

THE CONFIG MENU (continued)

FIGURE 24. CONFIG MENU LOOP

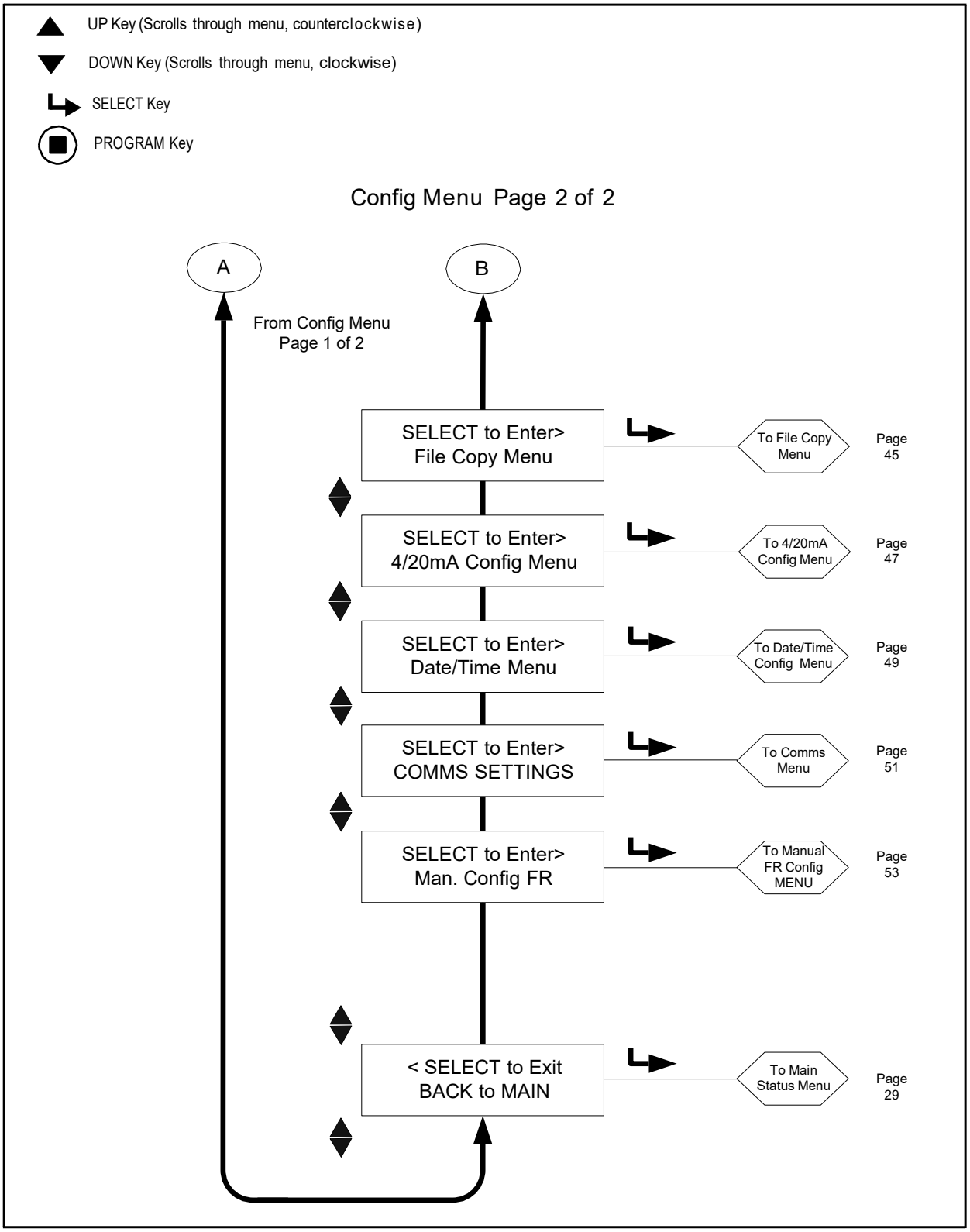

THE CONFIG MENU

To select a specific item to change from the Config Menu, scroll to it using the UP and DOWN arrows, then press the SELECT button. (To exit the viewed value without changing it, press the SELECT button again). To change a value, press the UP / DOWN keys until the desired value is displayed. Depress the PROGRAM button. The display will scroll "NEW VALUE SAVED", then automatically de-select the menu choice as if the SELECT button had been pressed. See note below.

Note: *You may only Edit the File that the scanner is currently running. For example, to Edit file "B", you must be currently running file "B". (See File Select section).*

File Select Mode

Affects all files. Choices for File Select Mode are Keypad, Line Inputs, Flame Relay A-B, and Modbus (Comms).

Keypad allows the file selection to be made **only** at the scanner keypad
Line Inputs allows the file selection to be made **only** via an external switch or relay to RFS1 and/or RFS2. **Note**: -2 models (e.g., 95UVS4-2) only provide RFS1.
Flame Relay A-B runs File A only until the Flame Relay is energized, then runs File B after the Auto File Select Delay (AUTO FSLCT DELAY) times out.
Modbus (Comms) allows the file selection to be made **only** via an external computer running Fireye Software (FEX1).

Auto File Select Delay

When Flame Relay is selected for Remote File Select, this setpoint (AUTO FSLCT DELAY) determines the time delay in seconds when switching from File A to File B once the flame relay is energized. Allowable times are 0 – 60 seconds.

PASSWORD

The user may change the password to any four-digit code desired. See Password Menu for details.

Reset Max Temp

The user may reset the highest internal temperature value that the scanner has recorded. The Max Temp will then be equal to the current internal temperature value.

FS Squelch Msgs

Under certain operating conditions, such as Front-End Gain (FEG) out-of-limits, the UV or IR Flame Signal may be driven to zero (squelched) by the scanner's control algorithm. The user can choose to Display, or to NOT Display, the Warning Messages that notify the user that the flame signal is being squelched. The default choice is to NOT Display these messages. The specific messages affected are listed in the Group II Warning Messages section on page 35.

Active File

The user can manually choose which file to run (and to Edit) by selecting this menu choice provided the File Select setting is set to "KEY" (refer to Config Menu). If the user wants to Edit the contents of a file, they must first select and run that particular file. The active file that this option will affect is displayed in the first position of the top row (e.g., A-FFRT) indicates the active file is "A").

A-GAIN RANGE

The "A" indicates the active file selected. During the AIM function, there are selectable internal "gain ranges" for the IR or UV (depending on the model) sensor Gain. If, when "Aiming" the scanner, a number of 24 or higher is observed, then the signal is over-range, and the "Gain Range" should be reduced. If, when "Aiming" the scanner, an Aim number of less than 10 is observed, then the Gain Range should be increased. Allowable values are: 1 (Lowest) to 10 (Highest).

SELECT to Enter AUTOMATIC CONFIG

Press the SELECT key to enter Automatic Configuration menu. This option will walk you through the configuration process beginning with AIM, Set IR or UV Gain Range, Learn ON, and Learn OFF. **Refer to AUTOMATIC CONFIG Menu.**

SELECT to Enter File Copy Menu

This function allows the user to copy the contents of one internal scanner file to another. There are four user configurable files, "A, B, C, D", plus three factory configured files, "F1, F2, F3". **Refer to "FILE COPY MENU" for details.**

SELECT to Enter 4/20 Config Menu

This option allows the user to select which parameter the 4-20mA analog output represents. The choices are "Flame QUALITY", "Flame SIGNAL", or "FRONT END GAIN". **Refer to "THE 4/20mA MENU" section for details.**

When Flame QUALITY is selected, the 4-20mA range (20mA MAP Value) may be set anywhere from 40 to 100.

When Flame SIGNAL is selected, the 4-20mA range (20 mA MAP Value) may be set anywhere from 400 to 999.

When FRONT END GAIN is selected, the 4-20 ma range (20 mA MAP Value) may be set anywhere from 5 to 100. Default values for FRONT END GAIN are 4mA = 255, 20mA = 5.

SELECT to Enter Date/Time Menu

This option allows the user to enter the current date and time into the scanner. Press the select key to see the year value. To change the year, press SELECT again, then use the UP and DOWN arrows to scroll to the correct year. Press PROGRAM to save this value. Press DOWN arrow to view the MONTH. To change the month value, press SELECT, scroll UP or DOWN to the correct MONTH and press PROGRAM. Press DOWN arrow to DAY of the MONTH. Press SELECT, scroll to current DAY and press PROGRAM to Save. You can enter HOUR, MINUTES, SECONDS by following the process outlined above. If the scanner is turned off for more than 36 hours, the date/time will revert back to the system default (Jan. 1, 2017) and current settings must be reentered. **Refer to "DATE/TIME MENU" for details.**

SELECT to Enter COMMS SETTINGS (Affects all files)

The communications address selected may range from 1 to 254. Each scanner must have a unique address. No two scanners in a communications loop can have the same address. Press SELECT to change COMMS values. Press SELECT to change MODBUS Address. Scroll UP/DOWN to the address desired and press PROGRAM key to save value. Default address is 247. Press DOWN key to see BAUD rate. Default BAUD rate is set at 19200. To change this value, press Select, scroll UP/DOWN to rate desired and press PROGRAM key to save. Default PARITY is set to 8/N/1. Other Parity values available are 8/O/1, 8/N/2 and 8/E/1. Follow the procedure above to change the PARITY. **See "THE COMMS MENU" for details.**

SELECT to Enter Man. Config

This option allows the user to enter Manual Configuration mode for Flame Relay. See

Manual Configuration section.

SELECT to Exit BACK to MAIN

Returns user to the Main Status Menu

THE AUTO CONFIG MENU

FIGURE 25. AUTO CONFIG MENU LOOP

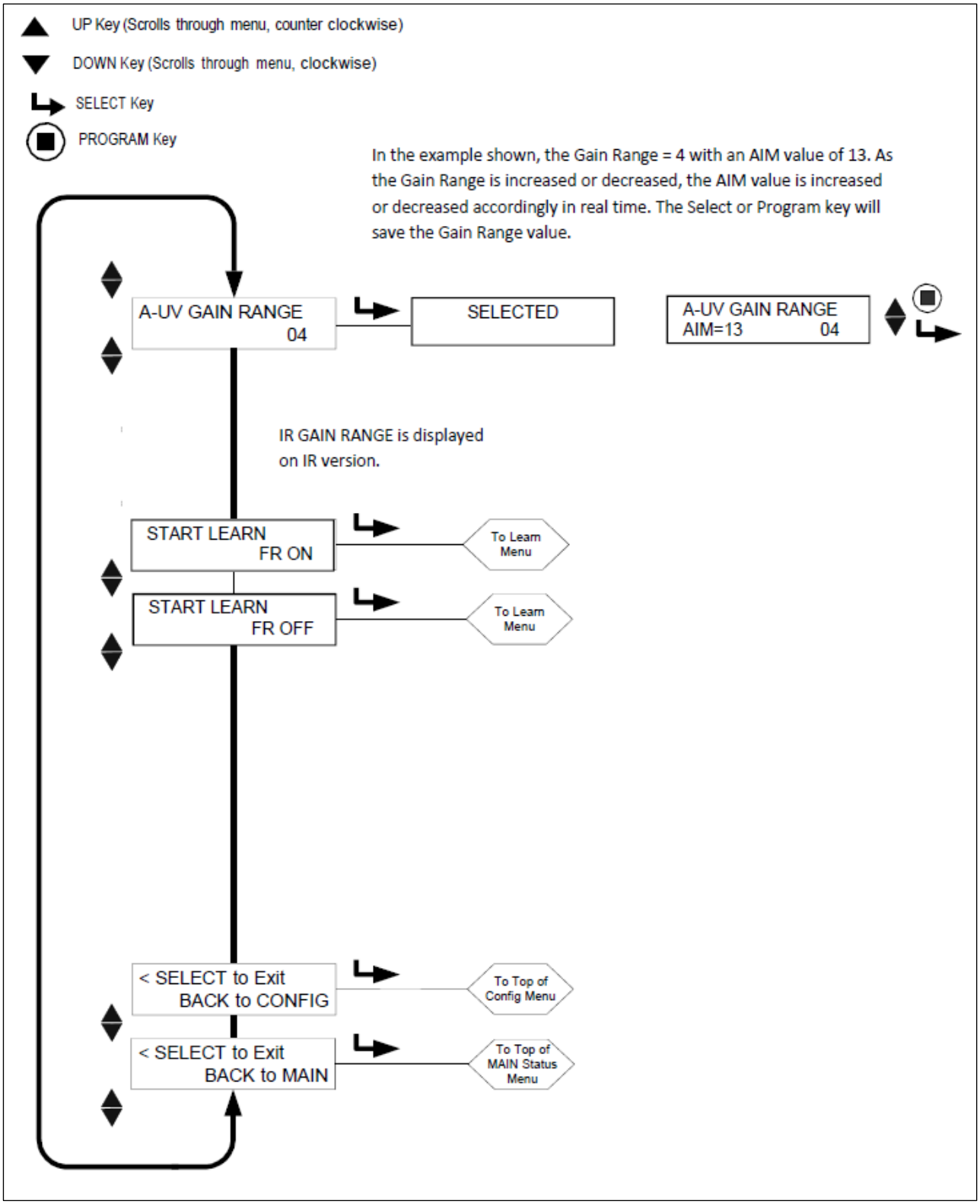

THE AUTO CONFIG MENU

Auto Configuration is an automatic calibration function whereby the InSight Series IV scanner scans the flame flicker frequency spectrum with flame ON, and with flame OFF (background radiation present). The scanner will then select the sensor gain, and bandpass frequency for optimum flame ON: OFF discrimination.

Auto Config is performed in 3 steps:

1. Run the target flame at the low firing rate. Enter the Automatic Config menu loop, and the GAIN RANGE value for the appropriate file (A, B, C, or D) is displayed. Press the SELECT key and the UV AIM (or IR AIM) value is displayed on the bottom row. Adjust the GAIN RANGE and physically aim the scanner for optimum peak signal strength as described in the "Aim Scanner" section below. Press the PROGRAM or SELECT key when complete.
2. Press the DOWN key until the appropriate "START LEARN... ON" message is displayed then press SELECT. Press PROGRAM and the scanner will memorize the flame ON condition as described in the "Learn ON" section below. Press the DOWN key when complete.
3. Turn the target flame off. Press the DOWN key until the appropriate "START LEARN... OFF" message is displayed then press SELECT. Press PROGRAM and the scanner will memorize the flame OFF condition as described in the "Learn OFF" section below. Press the DOWN key when complete.

Note: *For proper operation, both a Learn Flame ON and a Learn Flame OFF procedure must be performed.*

AIM SCANNER

Scroll to "SELECT to ENTER AUTOMATIC CONFIG" and press the SELECT key. The GAIN RANGE value for the appropriate file (A, B, C, or D) is displayed. Press the SELECT key and the UV AIM (or IR AIM) value is displayed on the bottom row. The AIM value represents the flame flicker intensity of the flame for *the entire flicker frequency spectrum* as sensed by the UV sensor or IR sensor.

Run the flame at low fire rate and observe the signal intensity.
The AIM number should be at its peak (highest numerically) when the scanner is aimed at the primary combustion zone (first 1/3) of the flame.

Aim the scanner at the first 1/3 of the flame to maximize the intensity reading. (Allow the scanner reading to stabilize at least two seconds after each movement).

If the AIM reading is 10 or less, the intensity is marginal, and it may be necessary to increase the GAIN RANGE. Pressing the UP (or Down) key will increase (or decrease) the GAIN RANGE as well as the UV (or IR) AIM value. The scanner has selectable GAIN RANGE values from 1 (lowest) to 10 (highest). The AIM Value should be set between 11 and 25, with an optimum value of 18. Use the Up and Down keys to adjust the GAIN RANGE to achieve these AIM values.

Note: *In rare applications where the flame is extremely bright, it is possible to saturate the sensor. The symptom could be a very low signal, an erratic signal, or no signal at all. In this situation, the installation of a sight-pipe orifice kit (P/N 53-121) is recommended.*

START LEARN FR ON

To begin LEARN Flame ON, make sure flame is at LOW Fire position and press the PROGRAM key. A prompt will display "MAKE SURE FLAME AT LOW EMISSION, PRESS PROG KEY TO START LEARN ON.". When the LEARN has completed, press any key to continue.

START LEARN FR OFF

To begin LEARN Flame OFF, make sure flame is OFF, then press PROGRAM key. A prompt will display "MAKE SURE FLAME IS OFF! THEN…PRESS PROG KEY TO START LEARN OFF.". When the LEARN has completed, press any key to continue.

SELECT to Exit BACK to CONFIG

Return to top of the Config Menu

SELECT to Exit BACK to MAIN

Return to top of the Main Status Menu

Application Notes:

1. The scanner stores the current real-time FEG value any time a Learn Flame ON procedure is performed.

2. The scanner will automatically select the appropriate sensor gain, and bandpass frequency for optimum discrimination, only after **both** the Learn Flame ON and the Learn Flame OFF procedures are performed once.

3. The Learn Flame ON and Learn Fame OFF procedures may be performed in either order. However, for proper operation the Learn Off procedure must be performed with the same level of back- ground radiation that would be present in typical use. For example, in a multi-burner application, the Learn Flame OFF procedure should be performed with the adjacent or opposed burners firing, not with a black boiler.

4. After a Learn Flame ON and a Learn Flame OFF procedure is initially performed, you may perform additional Learn ON or Learn OFF procedures if needed. Each time you perform **either** procedure, the scanner will automatically again select sensor gain, and bandpass frequency for optimum discrimination.

5. START LEARN FR ON and START LEARN FR OFF will **not** be displayed if the File Selection Mode is set to Flame Relay A-B. The user must first configure both Files A and B either manually or using the Auto Config Menu before the user can set the File Select Mode to Flame Relay A-B.

THE FILE COPY MENU

FIGURE 26. FILE COPY MENU LOOP

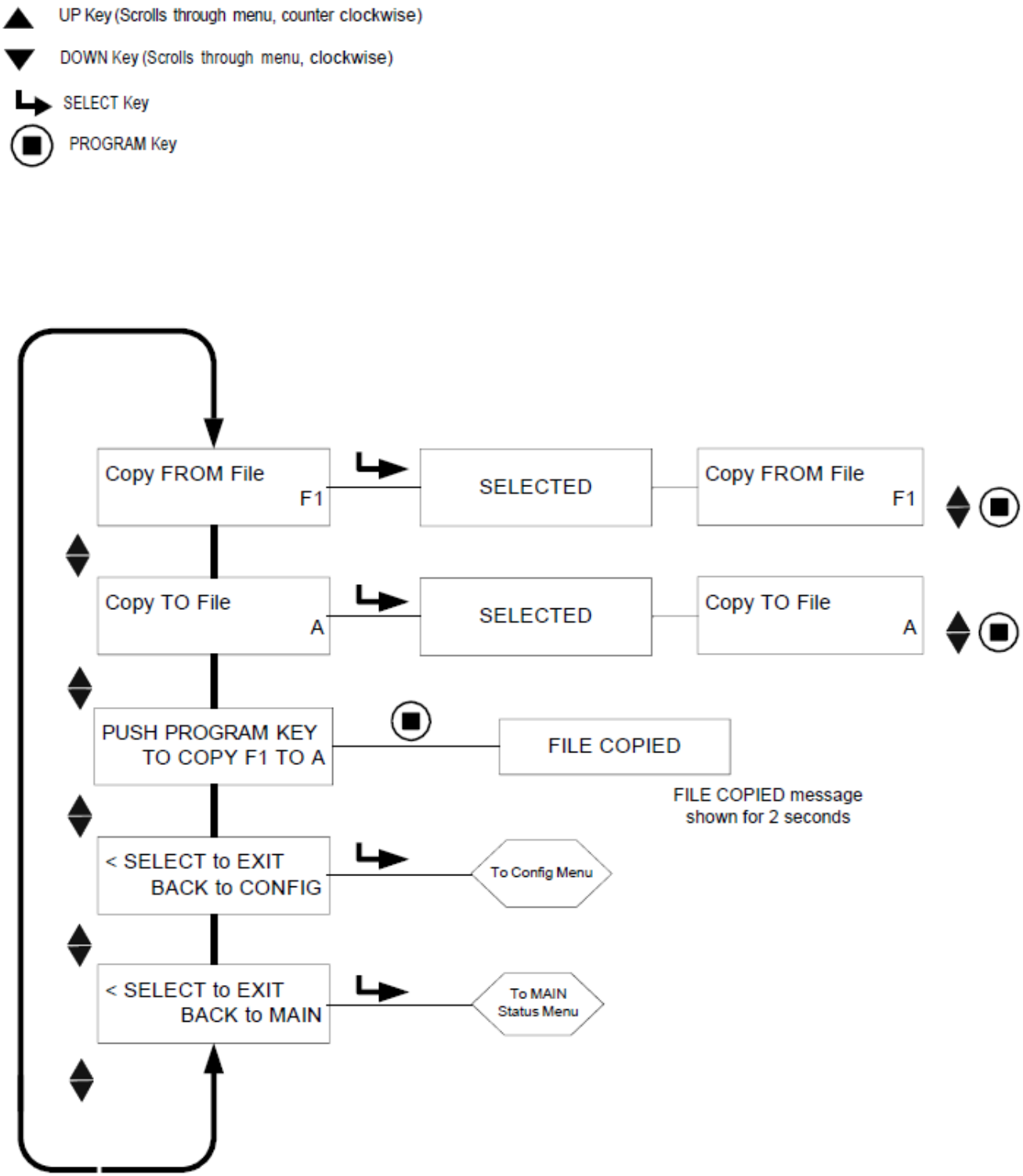

THE FILE COPY MENU

Copy FROM File

The source file to Copy from. Valid files are 3 factory configured files (F1, F2, F3) and user configurable files (A, B, C, D).

Copy TO File

The destination file where the source is copied to. You may copy *from* any file *to* a user file. You are not allowed to copy *from* a user file to a *factory* file. Valid files are (A, B, C, D).

PUSH PROGRAM KEY TO COPY xx TO x

When the Source file and Destination file have been selected, press PROGRAM to complete the file copy action. The display will read File Copied when the copy is complete.

Note: *You are not allowed to copy to the file you are copying from. i.e. If you attempt to copy from A to A you'll get "Aborted Copy".*

SELECT to Exit BACK to CONFIG

Return to top of the Config Menu.

SELECT to Exit BACK to MAIN

Return to top of the Main Status Menu.

The file copy function allows the user to copy the contents of one internal scanner file to another. Models have four user configurable files, "A, B, C, D", plus three factory configured files, "F1, F2, F3".

You may copy *from* any file *to* a user file. You are not allowed to copy *from* a user file to a *factory* file. You must first enter the source file, then the destination file.

The **Factory Configured Files** ("F1, F2" and "F3") contain factory default settings.

In File "F1", the IR (or UV) User Gain values are set at 31. The IR (or UV) flicker frequencies (BAND) are set at 23 Hz. The IR (or UV) FEG LRNED settings are 255. At these settings the scanner will respond to flame but will not likely discriminate between the target flame and other nearby flames.

In File "F2", the IR (or UV) User Gain values are set at 15 and the IR (or UV) flicker frequencies (BAND) are set at 23 Hz. The IR (or UV) FEG LRNED settings are 255. At these intermediate settings the scanner may not respond to flame, and/or may not properly discriminate until the scanner is further tuned.

In File "F3", the IR (or UV) User Gain values are set at 1. The IR (or UV) flicker frequencies (BAND) are set at 179 Hz. The IR (or UV) FEG LRNED settings are 5. At these settings the scanner will not likely respond to flame until the scanner gain is increased.

Note: *As shipped, all user files (A, B, C, D) contain the same setpoints as factory file "F3".*

EXAMPLE:

With "SELECT to Enter File Copy Menu" displayed (CONFIG menu), depress the SELECT key. The display will read "Copy FROM File F1" with "F1" being the source file. Press SELECT and use the UP/DOWN keys to select a different source file if desired. (F1, F2, F3, A, B, C, D)

With the desired source file displayed, press the PROGRAM key. NEW VALUE SAVED will appear.

Press DOWN key to "Copy TO File" display and the destination file will appear (e.g., "Copy TO File A"). Press SELECT and use the UP/DOWN keys to select a different destination file if desired (A, B, C, D). Press PROGRAM to SAVE new destination value.

Press the DOWN key to display PUSH PROGRAM KEY TO COPY F1 TO A, then press PROGRAM key to copy the source file to the destination file. The display will read "FILE COPIED".

THE 4/20mA MENU

FIGURE 27. 4/20mA MENU LOOP

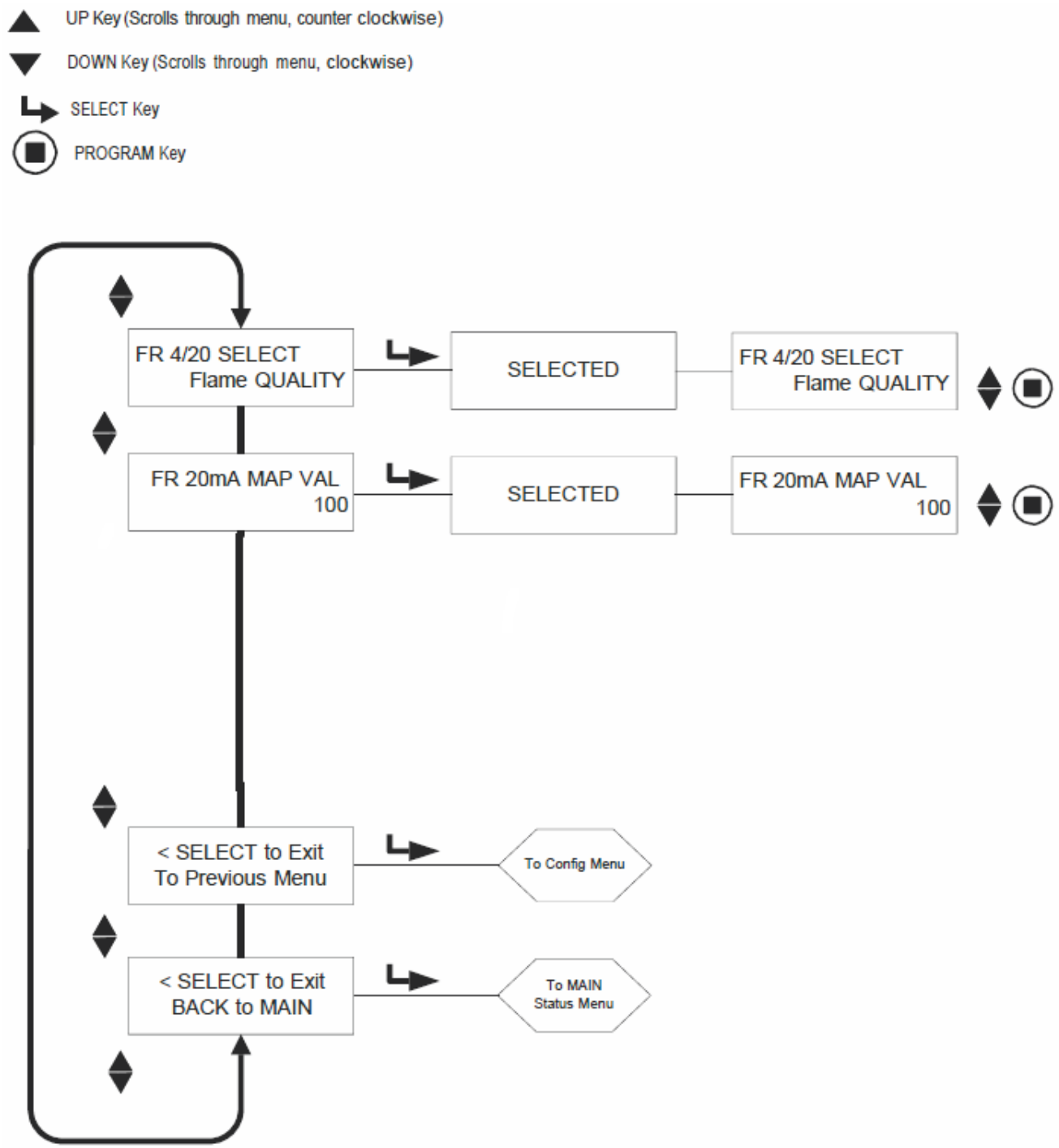

THE 4/20mA MENU

FR 4/20 SELECT

The user may select which parameter the 4-20mA analog output represents. Choices are **Flame QUALITY, Flame SIGNAL, or FRONT-END GAIN**. Factory default is **Flame QUALITY**. Press SELECT to enter option; Use UP or DOWN key to pick Flame QUALITY, Flame SIGNAL, or Track FEG; press PROGRAM to SAVE.

FR 20mA MAP VAL (Range)

This option allows the user to select the 4-20mA range (MAP VAL) of the parameter selected above.

If **Flame QUALITY** was selected, the analog output will be 4mA when the FQ=0. The range, or Flame Quality value for 20mA (20mA MAP VAL), is user selectable anywhere between 40 and 100. The factory default value is 100 (see Example 1 below). If the user selects a value of 50, when the Flame Quality reaches 50, the analog output will be 20mA (see Example 2 below).

If **Flame SIGNAL** was selected, the analog output will be 4 mA when the flame signal is 000. The range, or Flame Signal value for 20mA (20mA MAP VAL), is user selectable anywhere between 400 and 999. The factory default is 999. If the user selects a MAP VAL of 500, when the Flame Signal reaches 500, the analog output will be at 20mA.

Press SELECT to enter option and then use UP or DOWN key to pick MAP Value (between 40-100 for FQ, or between 400-999 for FS), then press PROGRAM to SAVE.

If **FRONT END GAIN** was selected, the analog output will be 4mA when the real time FEG value is 255. The range, or FEG value for 20mA (20mA MAP VAL) is user selectable anywhere between 5 and 100. The factory default value is 5. If the user selects a MAP VAL of 50, when the FEG value drops to 50, the analog output will be 20 mA.

Note: The 4-20mA output is an inverse proportion to the FEG value (e.g., 4mA at FEG = 255, 20mA at FEG = 5 (default value).

SELECT to Exit to Previous Menu

Return to top of the Config Menu

SELECT to Exit BACK to MAIN

Return to top of the Main Status Menu

Example 1

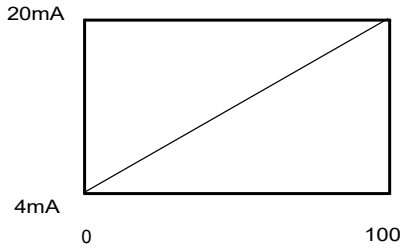

Select = FQ
Map Value = 100

Example 2

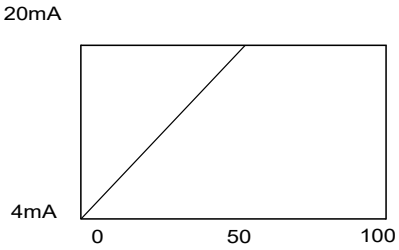

Select = FQ
Map Value = 50

THE DATE/TIME MENU

FIGURE 28. DATE/TIME MENU LOOP

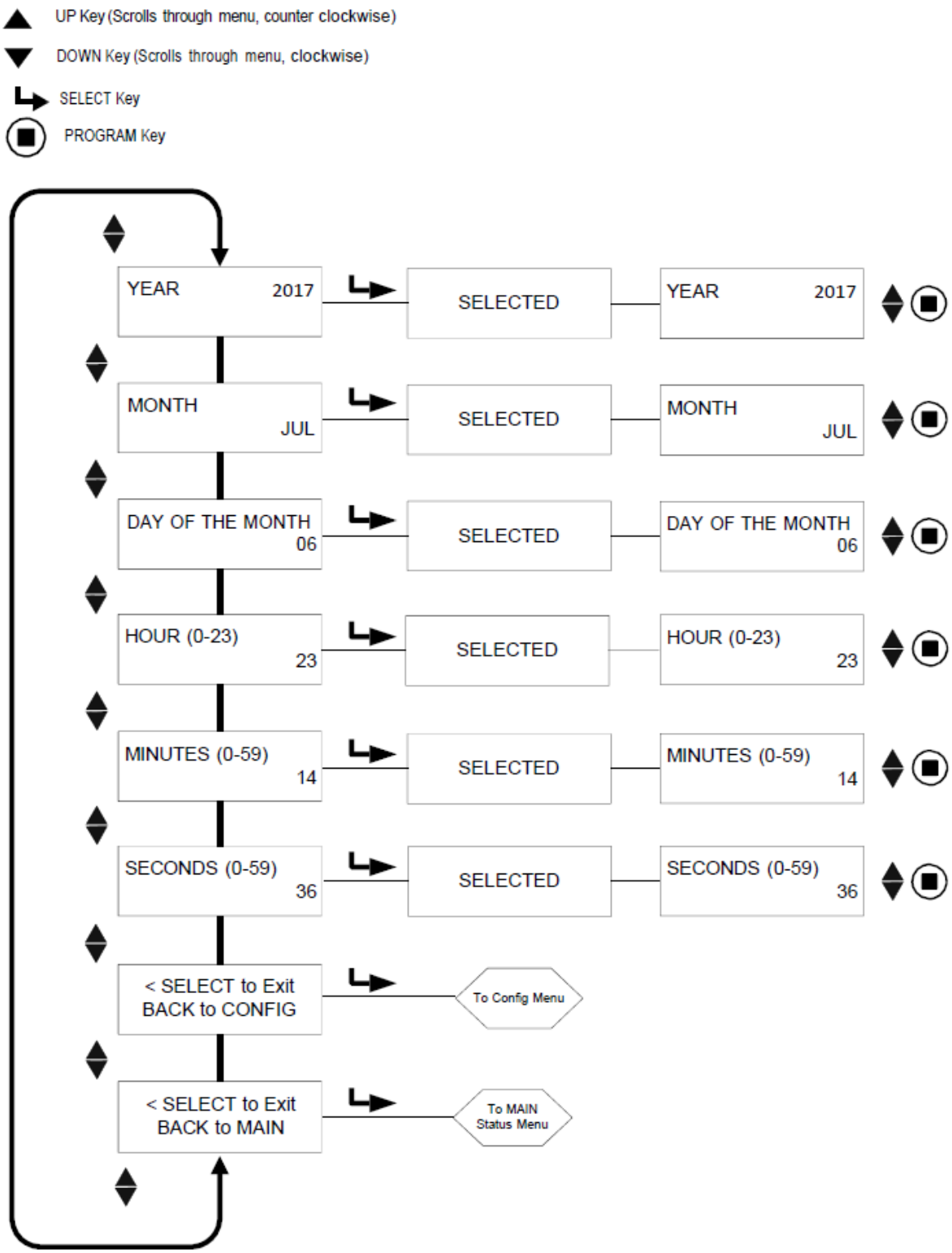

THE DATE/TIME MENU

The InSight Series IV scanner has a real time clock for date/time stamping error information. The user must set the clock to the current date and time where the scanner is located. In the event the scanner is shut off for more than 36 hours, the date and time will have to be re-entered.

To set Date and Time while in the CONFIG mode, press the DOWN Key until SELECT to ENTER Date/Time Menu is displayed and then Press SELECT.

YEAR

This option allows the user to set current YEAR. While YEAR 2xxx is displayed, press SELECT. Use UP or DOWN key to select current YEAR, then press PROGRAM key. NEW VALUE SAVED will appear.

MONTH

Press the DOWN key until MONTH is displayed. This option allows the user to set current MONTH. While MONTH is displayed, press SELECT. Use UP or DOWN key to select current MONTH, then press PROGRAM key. NEW VALUE SAVED will appear.

DAY OF THE MONTH

Press the DOWN key until DAY OF THE MONTH is displayed. This option allows the user to set current DAY. While DAY OF THE MONTH is displayed, press SELECT. Use UP or DOWN key to select current DAY, then press PROGRAM key. NEW VALUE SAVED will appear.

HOUR (0-23)

Press the DOWN key until HOUR (0-23) is displayed. This option allows the user to set current HOUR. The scanner uses a 24-hour time frame. While HOUR (0-23) is displayed, press SELECT. Use UP or DOWN key to select current HOUR, then press PROGRAM key. NEW VALUE SAVED will appear.

MINUTES (0-59)

Press the DOWN key until MINUTES (0-59) is displayed. This option allows the user to set current MINUTES. While MINUTES (0-59) is displayed, press SELECT. Use UP or DOWN key to select current MINUTES, then press PROGRAM key. NEW VALUE SAVED will appear.

SECONDS (0-59)

Press the DOWN key until SECONDS (0-59) is displayed. This option allows the user to set current SECONDS. While SECONDS (0-59) is displayed, press SELECT. Use UP or DOWN key to select current SECONDS, then press PROGRAM key. NEW VALUE SAVED will appear.

SELECT to Exit BACK to CONFIG

Return to top of the Config Menu

SELECT to Exit BACK to MAIN

Return to top of the Main Status Menu

THE COMMS MENU

FIGURE 29. COMMS MENU

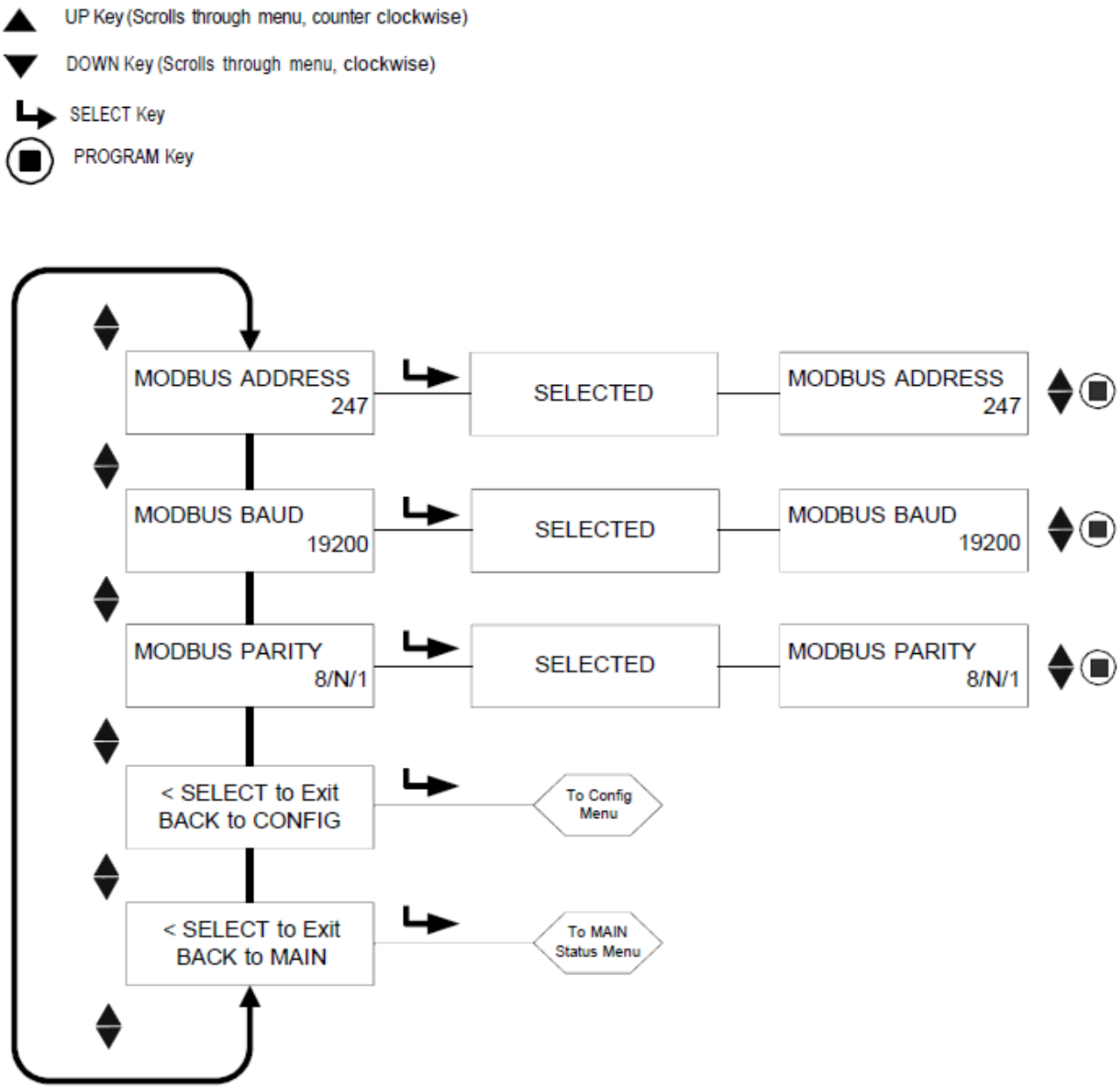

THE COMMS MENU

MODBUS ADDRESS

This option allows the user to select the device Modbus address. (Affects all files)

The communications address selected may range from 001 to 247. Each scanner must have a unique address. No two scanners in a communications loop can have the same address. Default factory address for InSight Series IV is 247.

MODBUS BAUD

This option allows the user to set Modbus communication baud rate. Valid values are 4800, 9600, 19200 and the factory default baud rate is 19200

MODBUS PARITY

This option allows the user to set communication parity. Valid values are 8/N/1, 8/E/1, 8/N/2, 8/O/1. Default factory parity is 8/N/1.

SELECT to Exit BACK to CONFIG

Return to top of the Config Menu

SELECT to Exit BACK to MAIN

Return to the top of the Main Status Menu

THE MANUAL CONFIG MENUS

FIGURE 30.

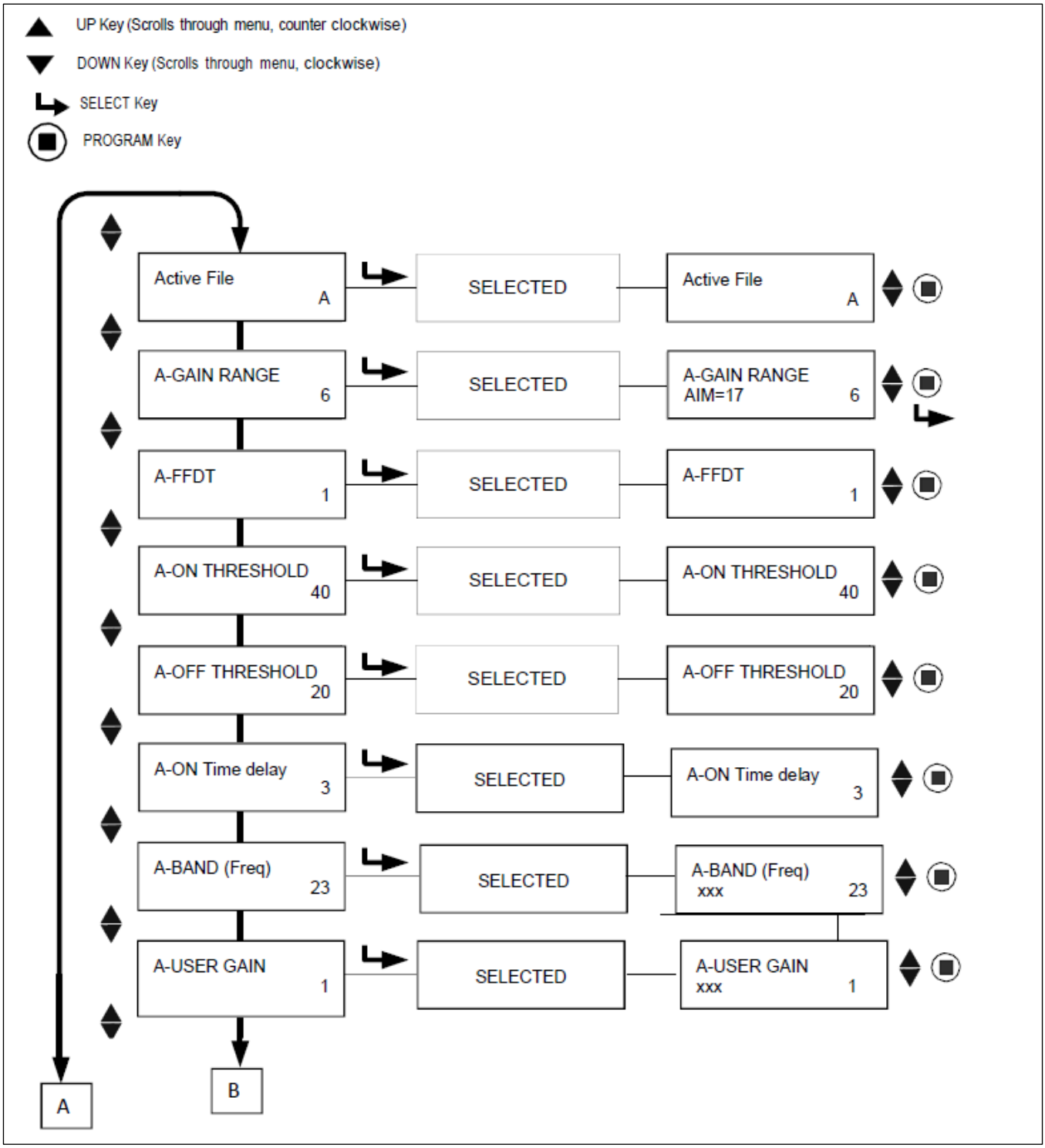

MANUAL CONFIG MENUS (continued)

FIGURE 31.

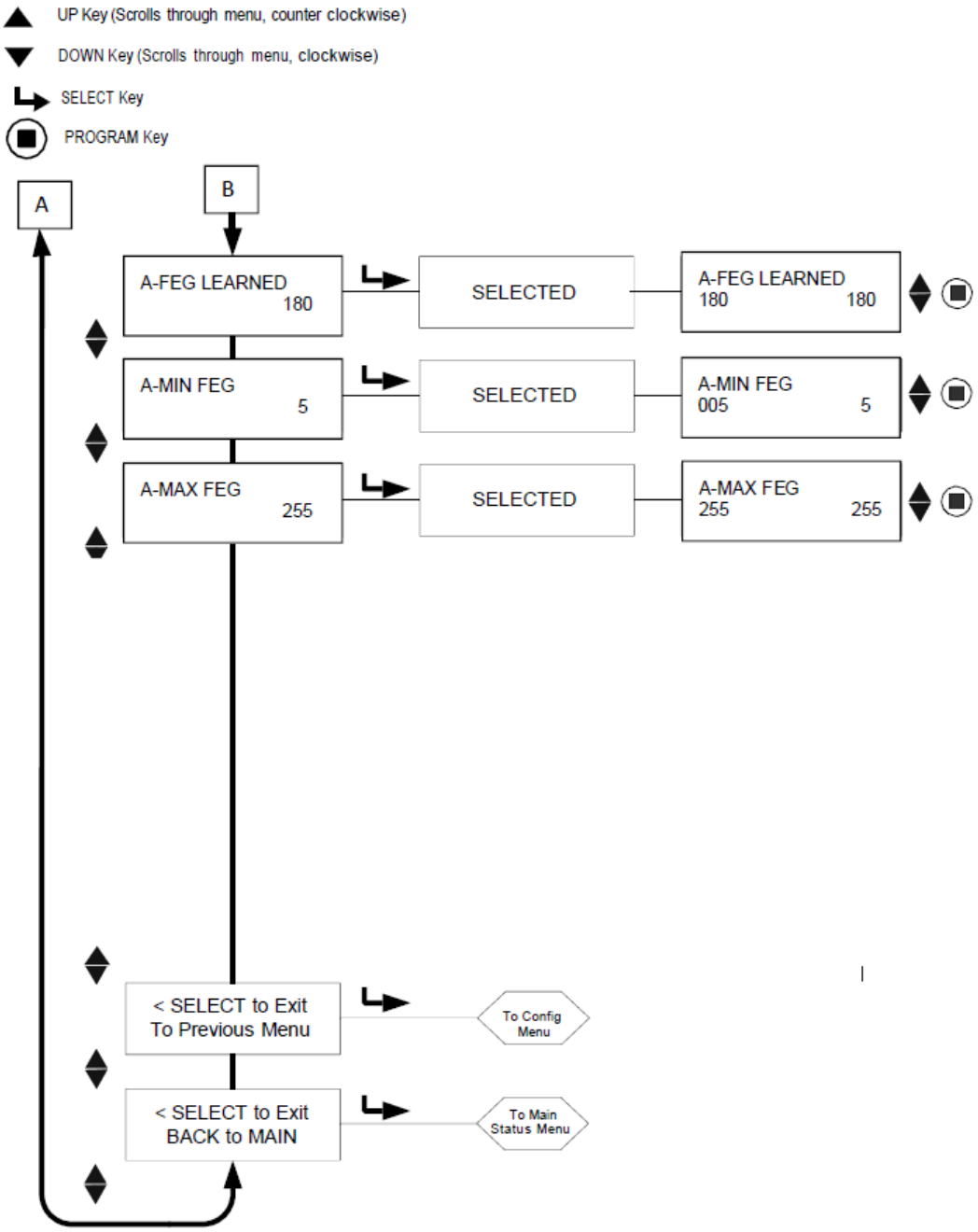

THE MANUAL CONFIG MENU

The MANUAL CONFIG menu allows the user to select and change the following settings for each flame file (A, B, C, or D): Active File (A, B, C, or D), Gain Range, Flame-Failure-Response-Time (FFRT), On and Off Thresholds, On-Time Delay, the sensors Flame Flicker Frequency (BAND) and Users Gain, and the sensor's Front-End-Gain (FEG) settings.

The following descriptions refer to the MANUAL CONFIG menu.

ACTIVE FILE

The user can manually choose which file to run (and to Edit) by selecting this menu choice provided the File Select setting is set to "KEY" (refer to Config Menu). If the user wants to Edit the contents of a file, they must first select and run that particular file. The active file that this option will affect is displayed in the first position of the top row (e.g., A-FFRT) indicates the active file is "A").

A-GAIN RANGE

The "A" indicates the active file selected. There are selectable internal "gain ranges" for the IR or UV sensor Gain. If, when "Aiming" the scanner, a number of 24 or higher is observed, then the signal is over-range, and the "Gain Range" should be reduced. If, when "Aiming" the scanner, an Aim number of less than 10 is observed, then the Gain Range should be increased. Allowable values are: 1 (Lowest) to 10 (Highest).

A-FFRT

When the Flame Quality drops to or below the Flame Relay OFF Threshold, the relay will de-energize after the selected Flame Failure Response Time (FFRT). The choices are 1 to 6 seconds. The maximum *allowable* FFRT setting is determined by local safety code. The default is 1 second.

Any FFRT selection greater than 4 seconds violates the FM Class 7610 Approval and is therefore not FM Approved.

A-ON THRESHLD *(ON THRESHOLD)*

This refers to the "pull-in" threshold of the internal Flame Relay, in terms of "Flame Quality". The ON Threshold can be set from 5 to 100. The ON Threshold must be at least 5 units higher than the OFF Threshold. Factory default value is 40.

A-OFF THRESHLD *(OFF THRESHOLD)*

This refers to the "drop-out" threshold of the internal Flame Relay, in terms of "Flame Quality". The OFF Threshold can be set from 0 to 95. The OFF Threshold must be at least 5 units lower than the ON Threshold. Factory default value is 20.

When the Flame Quality is equal to or less than the OFF Threshold (for a time equal to the "Flame Failure Response Time" setting, see below), the flame relay will de-energize.

A-ON TIME DELAY *(DELAY)*

When the Flame Quality rises to or above the Flame Relay ON Threshold, the relay will energize after the selected On Time Delay (OTD). The choices are 1 to 6 seconds. The default is 1 second.

A - BAND (Freq)

There are twenty-one choices of flame-flicker-frequencies (BANDS): 23, 31, 39, 46, 54, 62, 70, 78, 85, 93, 101, 109, 117, 125, 132, 140, 148, 156, 164, 171 and 179Hz.

A-USER GAIN

Adjust the sensor gain (1-31) so that the flame ON signal strength is well above the flame relay ON threshold, and the flame OFF signal strength is well below the flame relay OFF threshold.

Each upward step in the User Gain setting will increase the Signal Strength number for the sensor by approximately 50%. Each downward step in the User Gain setting will decrease the Signal Strength number for the sensor by approximately 33%.
Example 1: Assume that you observe a Signal Strength of "080" when the User Gain setting is 12. If you then increase the User Gain setting from 12 to 13 you should expect to see the Signal Strength increase to approximately "120".
Example 2: Assume that you observe a Signal Strength of "240" when the user Gain setting is 20. If you then decrease the User Gain setting from 20 to 19 you should expect to see the Signal Strength decrease to approximately "160".

A-FEG LRNED *(LEARNED)*
The Front-End Gain value stored when LEARN ON was performed. Possible values (5-255). The current real time FEG value is displayed on the far-left position of the bottom row.

A-MIN FEG
If the real-time Front End Gain value falls below this setting, the flame signal will be driven to zero. Possible values (5-255), default (5). The current real time FEG value is displayed on the far-left position of the bottom row.

A-MAX FEG
If the real-time Front-End Gain rises above this setting, the flame signal will be driven to zero. Possible values (5-255), default (255). The current real time FEG value is displayed on the far-left position of the bottom row.
SELECT to Exit to Previous Menu

Return to Main CONFIG Menu
SELECT to Exit BACK to MAIN
Returns to Main Status Menu

MANUAL SET-UP IN MANUAL CONFIG MENU

In Manual Configuration, the user may set values for the GAIN RANGE, BAND (Freq), User Gain (1-31), FEG Learned, FEG Min and FEG Max.

In the Manual Config Menu with the target flame ON (at low fire), record the sensor signal strength and stability at each of the 21 modulation BANDS: 23, 31, 39, 46, 54, 62, 70, 78, 85, 93, 101, 109, 117, 125, 132, 140, 148, 156, 164, 171 and 179 Hz. The signal strength range is 0-999. It may be necessary to adjust the sensor GAIN in order to keep the signal strength value on scale. If so, observe and record the sensor GAIN value (1-31) selected.

In the Manual Config Menu with the target flame OFF (leaving other burners firing), observe and record the sensor signal strength and stability at each of the twenty-one modulation BANDS: 23, 31, 39, 46, 54, 62, 70, 78, 85, 93, 101, 109, 117, 125, 132, 140, 148, 156, 164, 171 and 179Hz. *Do not adjust the sensor USER GAIN at this time.*

At each of the twenty-one BAND settings, compare the recorded Flame ON signal strength to the recorded Flame OFF signal strength. Select the BAND setting that yielded the greatest Flame ON to Flame OFF signal ratio and the greatest stability.

Adjust the sensor gain (1-31) so that the flame ON signal strength is well above the flame relay ON THRESHOLD, and the flame OFF signal strength is well below the flame relay OFF THRESHOLD (see “Flame Relay Thresholds”).

***Note:* For best scanner operation, the Flame ON Signal Strength should be between 100 and 150 or higher even though the Flame Quality display is capped at 100.**

Each upward step in the User Gain setting will increase the Signal Strength number for the sensor by approximately 50%. Each downward step in the User Gain setting will decrease the Signal Strength number for the Sensor by approximately 33%.

Example: Assume that after selecting the best BAND settings, the flame signals are as shown in Table 1. Assume that the Flame Relay ON threshold is 40 and the OFF is 20:

Table 1

Target Burner Status	Flame Signal (0 – 999)	Flame Quality (FQ) (0 – 100)	Flame Relay Status
Burner ON	340	100	Energized
Burner OFF	50	50	Energized

In Table 1, the background flame signal (Target Burner OFF) is too high and is preventing the Flame Relay from de-energizing. The User Gains should be reduced to drop the Flame Quality number below the Flame Relay Flame OFF Threshold of 20.

Table 2

Target Burner Status	Flame Signal (0 – 999)	Flame Quality (FQ) (0 – 100)	Flame Relay Status
Burner ON	160	100	Energized
Burner OFF	10	10	De-energized

Table 2 shows the results of lowering each User Gain setting by 4 steps (e.g., from User Gain=23 to User Gain=19):

Flame Relay Thresholds

The flame relay has a factory programmed FLAME ON threshold of 40, and a FLAME OFF threshold of 20 (0-100 scale). With these settings, it is recommended that the flame ON signal normally be at least 150. Other on and off thresholds may be selected to suit particular applications.

CAUTION: After selecting Sensor BANDS, Sensor GAINS, and Flame Relay ON & OFF Thresholds, proper flame detection and flame discrimination must be verified by starting and stopping the burner several times. The flame relay must reliably de- energize for all flame out conditions. This testing must be done with various adjacent burners on and off, and at various load levels. This is a requirement for proper operation.

INSIGHT Series IV FACTORY DEFAULT SETTINGS, USER FILES A, B, C, D and Factory File F3

PARAMETER	DEFAULT VALUE	ALLOWABLE VALUES
Config Menu:		
FILE SELECT	KEY	KEYPAD, LINE INPUTS, MODBUS COMMS, FLAME RELAY
PASSWORD	0205	0000-9999
FS Squelch Msgs	Do NOT Display	Display, Do NOT Display
UV (or IR) GAIN RANGE	1	1 (Lowest) – 10 (Highest)
4/20mA Config Menu:		
FR 4/20 SELECT	Flame QUALITY	Flame QUALITY, Flame SIGNAL, FRONT END GAIN
FR 4/20 MAP VAL	100	For Flame Quality: 40-100 For Flame SIGNAL: 400-999 For FRONT END GAIN: 100 - 5
Date/Time Menu:		
YEAR	2017	2017-4095
MONTH	JAN	JAN,FEB,MAR,APR,MAY,JUN,JUL,AUG,SEP,OCT,NOV,DEC
DAY OF THE MONTH	01	01-31 (dependent on current value of MONTH)
HOUR (0-23)	00	00-23
MINUTES (0-59)	00	00-59
SECONDS (0-59)	00	00-59
COMMS SETTINGS Menu:		
MODBUS ADDRESS	247	001-247
MODBUS BAUD	19200	4800, 9600, 19200
MODBUS PARITY	8/N/1	8/N/1, 8/E/1, 8/N/2, 8/O/1
Man. Config Menu:		
ACTIVE FILE	A	A, B, C, D
UV (or IR) GAIN RANGE	1	1 (Lowest) – 10 (Highest)
FFRT	1	1,2,3,4, 5*, 6* *not FM class 7610 approved
ON THRESHLD	40	5-100
OFF THRESHLD	20	0-95
On Time Delay	1	1,2,3,4,5,6
BAND (Freq)	179Hz	23,31,39,46,54,62,70,78,85,93,101,109,117,125,132,140,148, 156,164,171,179Hz
USER GAIN	1	1-31
FEG LRNED	5	5-255
MIN FEG	5	5-255
MAX FEG	255	5-255

Factory Files F1, F2, F3:

F1 (High Sensitivity): The BAND settings (IR or UV) are 23 Hz. The USER GAIN settings (IR or UV) are 31. The FEG LRNED settings (IR or UV) are 255. All other settings are the same as the File A, B, C, & D Factory Defaults.

F1 (Medium Sensitivity): The BAND settings (IR or UV) are 23 Hz. The USER GAIN settings (IR or UV) are 15. The FEG LRNED settings (IR or UV) are 255. All other settings are the same as the File A, B, C, & D Factory Defaults.

F3 (Low Sensitivity/Defaults): All settings are same as the File A, B, C, & D Factory Defaults.

INSIGHT Series IV CONFIGURATION RECORD

Parameter	FILE A	FILE B	FILE C	FILE D
Config Menu:				
FILE SELECT				
PASSWORD				
FS Squelch Msgs				
GAIN RANGE				
4/20mA Config Menu:				
FR 4/20 SELECT				
FR 4/20 MAP VAL				
COMMS SETTINGS Menu:				
MODBUS ADDRESS				
MODBUS BAUD				
MODBUS PARITY				
Man. Config FR Menu:				
ACTIVE FILE				
GAIN RANGE				
FFRT				
ON THRESHLD				
OFF THRESHLD				
On Time Delay				
BAND (Freq)				
USER GAIN				
FEG LRNED				
MIN FEG				
MAX FEG				

INSIGHT Series IV REPLACEMENT PROCEDURE

This procedure may be followed when replacing a damaged InSight Series IV scanner. It assumes that the InSight Series IV Configuration Record (above) was completed and kept as a reference when the original scanner was installed and calibrated. If not, the replacement scanner must be completely reprogrammed as describes earlier in this document.

1. Install the new scanner and apply power.
2. Enter the programming password and enter the CONFIG menu.
3. Manually enter the values from the InSight Configuration Record into the new scanner.

Important Note: *After Step 3, the scanner should detect flame ON, but may not properly indicate flame OFF until Step 4 is performed.*

4. Create the burner firing conditions that existed when the scanner was originally installed and calibrated, typically the low-fire condition.
   a. Enter the AUTO CONFIG menu.
   b. Depress the Up button until “START LEARN ON” is displayed.
   c. Depress the Select button then the Program button.
   d. The scanner will set its internal Front End Gain Reference, count down from 16 to 0, then display “Learn Passed”.

Note: *If the proper data was manually entered into the Manual Configuration menu, it should not be necessary to learn the flame OFF condition.*

5. Turn the burner OFF and ON to verify proper flame detection and discrimination.
6. Repeat Steps 2 through 5 for each scanner memory file used (A, B, C, D)
   or Copy “Upload/Download” saved parameters using Fireye Explorer software

This page is intentionally left blank

NOTICE

When Fireye products are combined with equipment manufactured by others and/or integrated into systems designed or manufactured by others, the Fireye warranty, as stated in its General Terms & Conditions of Sale, pertains only to the Fireye products and not to any other equipment or to the combined system or its overall performance.

WARRANTIES, EXCLUSIVE REMEDIES, AND LIMITATION OF DAMAGES

Fireye guarantees for one year from the date of installation or 18 months from the date of manufacture, whichever occurs first, to replace, or at its option, to repair any product or part thereof which Fireye, in its sole discretion, deems to be defective in material or workmanship or which otherwise fails to conform to the description of the product on the face of its sales order. Fireye's obligations pursuant to this warranty do not extend to any products or parts thereof which Fireye determines to have been installed, operated, maintained, repaired, or altered improperly or otherwise than in conformity to Fireye's applicable instructions, or which have been subject to misuse, accident, or neglect.

THE FOREGOING IS IN LIEU OF ALL OTHER WARRANTIES, BOTH EXPRESS AND IMPLIED, INCLUDING THE WARRANTIES OF MERCHANTABILITY AND FITNESS FOR A PARTICULAR PURPOSE. EXCEPT AS SPECIFICALLY STATED IN THESE TERMS AND CONDITIONS OF SALE, REMEDIES WITH RESPECT TO ANY PRODUCT OR PART MANUFACTURED OR SOLD BY FIREYE, OR WITH RESPECT TO ANY BREACH OF OR DEFAULT UNDER THIS CONTRACT (INCLUDING ANY BREACH OF WARRANTY), SHALL BE LIMITED EXCLUSIVELY TO THE RIGHT TO REPLACEMENT OR REPAIR F.O.B. FIREYE MAIN WAREHOUSE LOCATION, AS ABOVE PROVIDED. IN NO EVENT SHALL FIREYE BE LIABLE FOR CONSEQUENTIAL OR SPECIAL DAMAGES OF ANY NATURE WHICH MAY ARISE IN CONNECTION WITH SUCH PRODUCT OR PART OR ANY BREACH OF OR DEFAULT UNDER THIS CONTRACT. TO THE EXTENT PERMITTED BY LAW, THE AGGREGATE LIABILITY OF FIREYE HEREUNDER WHETHER IN CONTRACT, TORT (INCLUDING NEGLIGENCE) OR OTHERWISE, WILL BE LIMITED TO ONE TIMES THE CONTRACT VALUE, PROVIDED HOWEVER THE FOREGOING LIMITATION DOES NOT LIMIT THE LIABILITY OF FIREYE FOR ANY INJURY TO, OR DEATH OF A PERSON, CAUSED BY THE GROSS NEGLEGENCE OF FIREYE.

Fireye, LLC
3 Manchester Road
Derry, New Hampshire 03038 USA
Fireye.com

CU-120
November 11, 2025
Supersedes January 18, 2024

© 2025 Fireye