ENERPAC

L4346
Rev. G 03/26

RSL Torque Wrench

RSL1500 (RSL2)
RSL3000 (RSL4)
RSL5000 (RSL6)
RSL8000 (RSL8)
RSL11000 (RSL14)
RSL19000 (RSL20)
RSL28000 (RSL30)

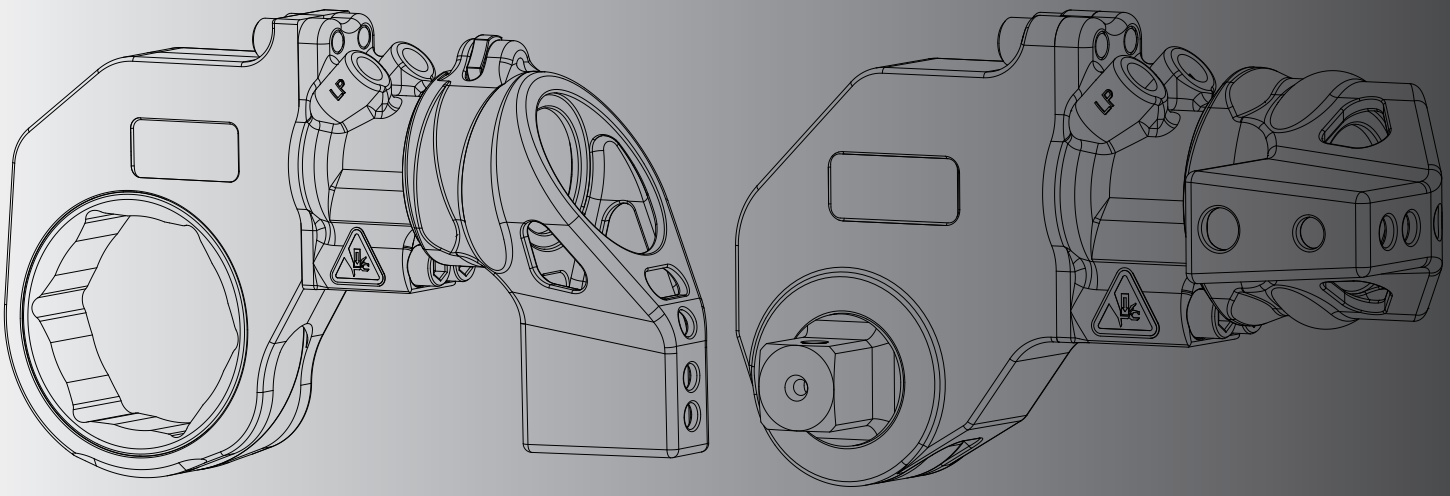

ENGLISH (EN)

Instruction Sheet

Table of Contents

1 Introduction. 3
2 Safety. 3
3 Wrench Descripton and Terminology. 6
4 Operation Instruction. 8
5 Warranty, Maintenance and Assembly. 18
6 Troubleshooting 22
7 Technical Specifications 24
8 Ordering Replacement Parts. 41

For other languages go to www.enerpac.com.
Weitere Sprachen finden Sie unter www.enerpac.com.
Para otros idiomas visite www.enerpac.com.
Muunkieliset versiot ovat osoitteessa www.enerpac.com.
Pour toutes les autres langues, rendez-vous sur www.enerpac.com.
Per altre lingue visitate il sito www.enerpac.com.
その他の言語はwww.enerpac.comでご覧いただけます。
이 지침 시트의 다른 언어 버전은 www.enerpac.com.
Ga voor de overige talen naar www.enerpac.com.
For alle andre språk henviser vi til www.enerpac.com.
Inne wersje językowe można znaleźć na stronie www.enerpac.com.
Para outros idiomas consulte www.enerpac.com.
Информацию на других языках вы найдете на сайте **www.enerpac.com.**
För andra språk, besök www.enerpac.com.
如需其他语言，请前往 www.enerpac.com.

1 Introduction

Overview

The Enerpac RSL torque wrench is designed for controlled tightening and loosening of fasteners in industrial bolting applications. The RSL torque wrench features a low profile cassette, compact drive unit and integrated reaction arm, making it ideal for use in locations where workspace is limited.

Interchangeable RSL hexagon and square drive cassettes are available in a large assortment of both metric and imperial sizes to suit specific customer requirements.

The RSL torque wrench can be used with a wide range of Enerpac bolting pumps. Electric, air pumps, and battery powered are available (sold separately).

Delivery Instructions

Upon delivery, all components must be inspected for damage incurred during shipping. If damage is found, the carrier should be notified at once. Shipping damage is not covered by the Enerpac warranty.

Warranty

- Enerpac guarantees the product only for the purpose for which it is intended.
- Refer to the Enerpac Global Warranty document for terms and conditions of the product warranty.

Any misuse or alteration invalidates the warranty.

- Observe all instructions as communicated in this manual.
- When replacement parts are needed, use only genuine Enerpac replacement parts.

Conformance to National and International Standards

•RSL1500 •RSL3000 •RSL5000 •RSL8000
•RSL11000 •RSL19000 •RSL28000

These tools conform with the requirements for CE and UKCA.

Enerpac declares that the product(s) have been tested and conforms to applicable standards and the product(s) are compatible to all EU and UK Requirements.

Copies of the EU Declaration as well as the UK Self-Declaration are enclosed with each shipment.

2 Safety

Read all instructions carefully. Follow all recommended safety precautions to avoid personal injury as well as damage to the wrench and/or damage to other property. Enerpac cannot be responsible for any damage or injury from unsafe use, lack of maintenance or incorrect operation. Do not remove warning labels, tags, or decals. In the event any questions or concerns arise, contact Enerpac or a local Enerpac distributor for clarification.

If you have never been trained on high-pressure hydraulic safety and Hydraulic Torque Tools, consult your distributor or service center for information about Enerpac Hydraulic Safety Course.

This manual follows a system of safety alert symbols, signal words and safety messages to warn the user of specific hazards. Failure to comply with these warnings could result in death or serious personal injury, as well as damage to the equipment or other property.

The Safety Alert Symbol appears throughout this manual. It is used to alert you to potential physical injury hazards. Pay close attention to Safety Alert Symbols and obey all safety messages that follow this symbol to avoid the possibility of death or serious personal injury.

Safety Alert Symbols are used in conjunction with certain Signal Words that call attention to safety messages or property damage messages and designate a degree or level of hazard seriousness. The Signal Words used in this manual are DANGER, WARNING, CAUTION and NOTICE.

DANGER Indicates a hazardous situation that, if not avoided, will result in death or serious personal injury.

WARNING Indicates a hazardous situation that, if not avoided, could result in death or serious personal injury.

CAUTION Indicates a hazardous situation that, if not avoided, could result in minor or moderate personal injury.

NOTICE Indicates information considered important, but not hazard related (e.g. messages relating to property damage). Please note that the Safety Alert Symbol will not be used with this signal word.

2.1 Safety Precautions - RSL Torque Wrenches

WARNING

Failure to observe and comply with the following precautions could result in death or serious personal injury. Property damage could also occur.

- Always wear protective headwear, ear protectors, footwear and gloves (at a minimum, rigger type gloves) suitable for safe operation of the tool. The protective clothing must not interfere with safe operation of the tool or restrict the ability to communicate with coworkers.
- Be sure your workplace is safe. Follow the instructions in your workplace's standard operating procedures and be sure to observe all communicated safety precautions.
- Do not place any part of the body between the wrench reaction arm and the reaction point.
- Do not place any objects between the wrench reaction arm and the reaction point. Keep the hoses away from the reaction points.
- Do not stand in the line of movement of the tool when it is in operation. If the tool separates from the nut or bolt during operation, it will detach in that direction.
- Be aware that a RSL Square Drive or Hex Insert that breaks during operation of the tool may become a high velocity projectile.
- When positioning and operating the tool, use the positioning handles to ensure minimal body contact with the tool during use and to allow for a safe operating distance.
- Be aware that a nut or bolt that breaks off during operation of the tool may become a high velocity projectile.
- Be sure appropriate guards are securely in position and free from damage.
- Keep your hands away from the fastener being loosened or tightened. Tightening and loosening nuts and bolts involves little visible movement. However, the pressures and loads are extreme.
- Stop operation immediately if a gap appears between the torque wrench drive and hex cassette or square drive cassette. Have the tool inspected and repaired before it is operated again.
- Maximum allowable pressure for the RSL torque wrench is 10,000 psi [690 bar]. Do not exceed this pressure setting.
- Always be sure that pump is stopped and all pressure is fully relieved (0 psi/ bar) before disconnecting or connecting hydraulic hoses. The sudden and uncontrolled release of pressurized oil could occur if hoses are disconnected while under pressure.
- Never attempt to connect or disconnect hoses while the pump is on and/or the system is pressurized.
- Be certain that all hose couplings are fully connected at both the pump and wrench ends before applying any hydraulic pressure. If the couplings are not fully connected, oil flow will be blocked, and the drive unit could be subjected to excessive hydraulic pressures. Catastrophic failure of wrench could result.
- Never attempt to force the drive unit onto the cassette if it becomes difficult to install. Have the drive unit and cassette inspected and repaired before placing the wrench back into service.
- Never apply more hydraulic pressure to any tool, hose, fitting or accessory than the maximum allowable pressure as stated in the manufacturer's specifications. The system operating pressure must not exceed the pressure rating of the lowest rated component in the system.
- Be sure the operator has completed safety induction training, specific to the work surroundings. The operator should be thoroughly familiar with the controls and the proper use of the tool.
- The operator must be of at least the minimum age required by applicable local regulations, laws and the facility standard operating procedures.
- Do not abuse or overstress the hoses in any way. Do not bend the hoses excessively.
- Take every precaution to prevent oil leaks from occurring. High pressure oil leaks can penetrate the skin, resulting in serious injury.
- Never strike the tool while it is pressurized or under load. Components under tension may become dislodged, allowing them to become dangerous projectiles. Uncontrolled release of pressurized hydraulic oil could also occur.
- Avoid striking the tool at any time, even when it is not pressurized or under load. Striking the tool could cause permanent damage to wrench components and may affect the wrench calibration.
- Use only a high quality nonflammable solvent for cleaning and degreasing parts during wrench repair procedures. To reduce the risk of fire or explosion, do not use flammable solvents.
- Be sure to wear proper eye and hand protection when using solvent. Always follow the solvent manufacturer's safety and use instructions and any additional instructions included in the standard operating procedures for your worksite. Be certain there is adequate ventilation when using solvent.
- It is recommended that users maintain accurate usage logs, the RSL Torque Wrench and its individual components are to be considered long lasting consumables, that need regular testing and inspection. It is recommended that users replace the RSL and its components every 10,000 cycles.

⚠ CAUTION

Failure to observe and comply with the following precautions could result in minor or moderate personal injury. Property damage could also occur.

- Always carry the wrench by its housing. The positioning handle is designed only as an aid to help position the wrench on the bolt or nut.
- Be sure that the backup wrench (on the opposite end of nut or bolt being tightened or loosened) is secured so it cannot drop or become disengaged during bolting procedures.
- Be sure that the hex ratchet size corresponds to the size of the fastener being loosened or tightened. Failure to observe this precaution can result in the wrench becoming unstable and can lead to catastrophic failure of the tool.
- Always position the wrench for maximum stability. A positioning handle is avaliable to properly position tool during operation.
- Be sure reaction points are adequate for the forces at work during operation of the tool.
- Be sure the reaction point is of a suitable shape. If possible, use an adjacent nut or bolt as a reaction point.
- When the hex ratchet is placed on the nut or bolt a gap may exist between the reaction arm and the reaction point. When the tool is operated the reaction arm and point will make forceful contact. Be sure the wrench is stable before applying hydraulic pressure.
- Provide adequate support in vertical and inverted applications.
- The torque required to loosen a nut is variable and may exceed the torque capacity of the wrench. Never operate the wrench at above 75 percent of its rated maximum torque when loosening a nut or bolt.
- Be sure to minimize torsional and bending stresses in the wrench, the hex ratchet and any accessories.
- Bolt lubricants and anti-seize compounds will have a rated coefficient of friction. Be sure to know the coefficient of friction for the lubricant or anti-seize compound that is being used. To ensure proper tightening of nuts and bolts, always use this coefficient of friction when calculating required torque values.

NOTICE

Failure to observe and comply with the following precautions could result in property damage and/or void the product warranty.

- Never carry the wrench by its hoses.
- Always use Enerpac pumps and hoses.
- Always use Enerpac replacement parts.
- The maximum torque output of the wrench must always exceed the torque required to loosen or tightening the nut or bolt.
- Never operate the wrench with a hydraulic supply connection to the advance side only as this may damage the internal parts.
- In severe service conditions, be aware that the wrench must be inspected, cleaned and lubricated more frequently than normal (see Section 5).
- If oil leakage is present from drive unit, replace seals as required (see section 5) before placing the drive unit back into service.
- If the wrench is dropped from a significant height, have the tool inspected and checked for proper operation before placing it back into service.
- Always follow the inspection and maintenance instructions contained in this manual. Perform maintenance and inspection activities at the specified time intervals.

3 Wrench Description and Terminology

3.1 Description

3.1.1 RSL square drive and hex tools are offered in seven standard models:

TABLE 3.1-1		
RSL TORQUE RATINGS		
MODEL	MAXIMUM OUTPUT TORQUE	
	(Ft.lbs)	(Nm)
RSL1500	1408	1909
RSL3000	3080	4176
RSL5000	5303	7190
RSL8000	7862	10659
RSL11000	11154	15123
RSL19000	18843	25547
RSL28000	28002	37965
Note: See Section 7.1 to 7.6 for more details		

3.1.2 See Section 3.2 for definitions of key terms.

3.1.3 RSL torque wrenches (tools):

a. Enable user to accomplish bolting tasks with high torque, accuracy, and efficiency.

b. Are powered by a hydraulic pump operated at pressures:

i. Up to 10000 psi [690 bar] for advance stroke.

ii. From 1500 to 1700 psi [103 to 117 bar] for retract stroke.

c. Are used to remove fastener tension (loosen/breakout).

d. Apply a specific tension to studs, bolts and cap screws (tightening/makeup). Desired fastener tension is achieved by:

i. Proper flange alignment, assembly, etc.

ii. Controlling fastener frictional forces between stud/nut, and nut/flange by:

1. Using lubricant with known friction coefficient on threads, nut face, etc.
2. Using bolts/nuts which are not damaged or dirty.

iii. Applying proper torque value for a specific bolt material, bolt size, and lubricant.

1. Refer to torque vs. pressure certificate of precision for each tool, or Section 7.9 for the nominal torque vs. pressure table.
2. Precisely control pump pressure.

⚠ CAUTION

- **Do not modify any equipment or accessories.**
- **Contact Enerpac for special applications or modifications.**
- **Unauthorized modifications may cause injury and/or damage plus invalidate warranty.**

3.2 RSL Terms

3.2.1 AF – Across Flat

3.2.2 Hex bit – Insert for a square drive (sq. dr.) tool which replaces the square drive with a hex version. Typically used on socket head cap screws.

3.2.3 RSL – Ratcheting Slim Line

3.2.4 RSQxxxxxST – RSL Square Drive Wrench Set (e.g. RSQ28000ST, RSQ3000ST)

3.2.5 RLPxxxxx – RSL Hex Drive Wrench

a. RLPxxxx – RLP28602 (RSL28000 for a 6-2/16”, 6-1/8”, or 155mm AF Fastener),

b. RLPxxxxxM – RLP11085M (RSL11000 for a 85 mm AF Fastener).

3.2.6 Torque – The tendency of a force to rotate an object about an axis (twist). Force times distance from object axis.

3.2.7 Torque vs. Pressure Certificate of Precision – A torque vs. pressure table and curve for a given torque wrench drive and wrench assembly.

3.2.8 QC’s – Quick Connect Couplings for hoses.

3.2.9 QD’s – Quick Disconnect Couplings for hoses.

3.2.12 RSL Features and Accessories:

a. Pump

b. Torque Wrench Drive

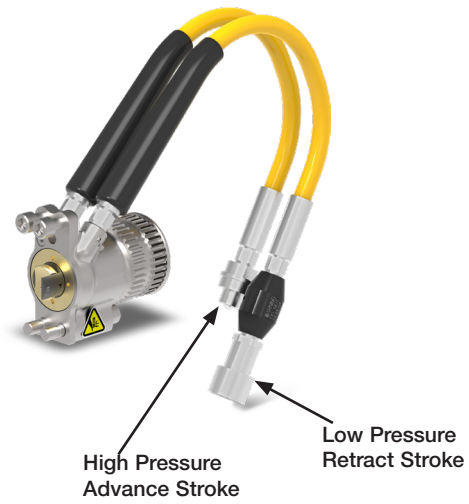

c. QD's for Torque Wrench Drive Hoses
Screw Type with Relief Valve

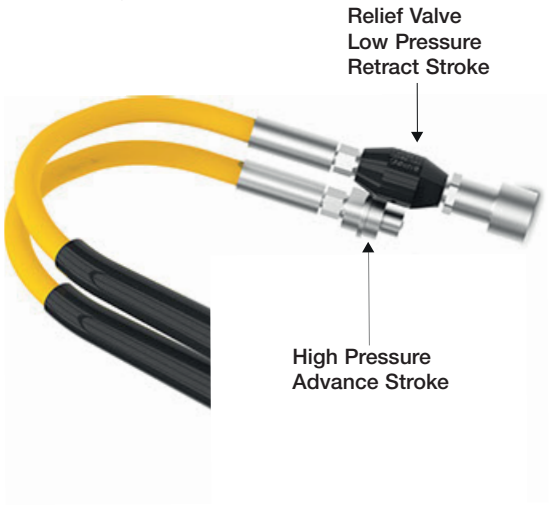

3.2.13 RSL Features and Accessories [continued]:

d. Reaction Arm

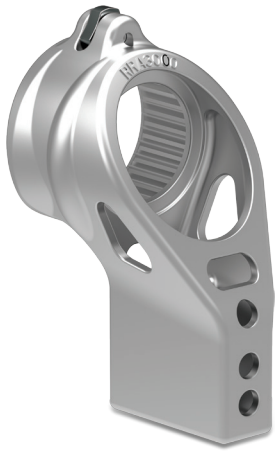

e. Hexagon Cassette (RLPxxxxx)

f. Hexagon Torque Wrench Set

3.2.12 RSL Features and Accessories [continued]:

g. Hex Bit

h. Square Drive Cassette (RSQxxxxx)

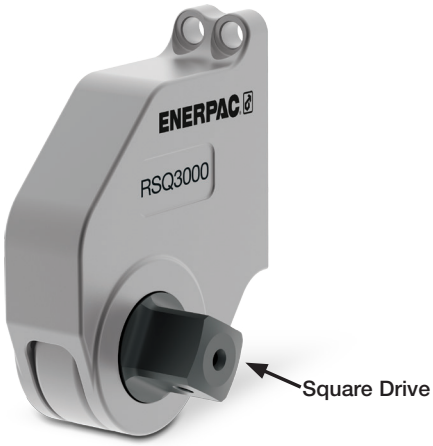

i. Square Drive Torque Wrench Set (RSQxxxxxST)

4 Operation Instructions

4.1 Flange Assembly and Disassembly

4.1.1 Perform hazard analysis before starting work.

4.1.2 Ensure fastener contact surfaces and flanges have been properly cleaned and examined.

a. Flanges:

i. Surface finish, scratches, nicks, burrs, flatness.

ii. Nut bearing surface – No paint or other thick coating, not scored.

b. Fasteners:

i. No rust, corrosion, burrs.

ii. Make sure bolt/nut will turn freely by hand beyond position where it will come to rest. Do not lubricate for this test.

iii. Fastener replacement is always the safe option.

iv. See ASME PCC-1-2013 for fastener replacement guidelines.

4.1.3 Ensure:

a. Joint members are properly aligned.

b. Gasket is properly installed.

c. Lubrication of fastener working surfaces have been properly considered.

4.2 Choose Flange Assembly Method

4.2.1 **TIGHTENING METHOD 1** – Follow equipment manufacturer procedures.

4.2.2 **TIGHTENING METHOD 2** – Torque using Legacy Cross-Pattern Tightening Sequence and Bolt Numbering (Table 4.2-1). Single tool 8 bolt flange example - Fig. 4.2-1:

a. Mark fasteners with chalk in clockwise direction (1, 2, 3, 4, 5, 6, 7, and 8). These numbers are outside large circle in Fig. 4.2-1 (e.g. 1-5-3-7-2-6-4-8).

b. Mark correct tightening sequence on studs (“1”, “2”, “3”, “4”, “5”, “6”, “7”, and 8”).

i. This sequence is 1-5-3-7-2-6-4-8.

ii. These are the “circled numbers” in Fig 4.2-1.

iii. In this case, “1” relates to 1, “2” to 5, “3” to 3, “4” to 7, “5” to 2, “6” to 6, “7” to 4, and “8” to 8.

c. Determine torque value for each stage of stud tightening.

i. First stage - limit to 30% of final torque.

ii. Second stage - limit to 60% of final torque.

iii. Third and Fourth stages - 100% of final torque.

4.2 Choose Flange Assembly Method [conitnued]

d. Tighten sequence:

i. First, second and third stages: Cross-pattern tightening sequence in Fig. 4.2-1 (b).

ii. Fourth, and Final Stage:

1. Clockwise "adjacent bolt-to-bolt tightening" in Fig. 4.2-1 (c).
2. Continue until all nuts stop rotating.

4.2.3 **TIGHTENING METHOD 3** – Stud Elongation Tightening

a. Determine torque value for proper elongation.

i. Contact Enerpac Customer Service

b. Follow steps in **TIGHTENING METHOD 2**

c. After 4th stage, if studs are:

i. Short – increase torque and tightening until studs are proper length.

ii. Long – loosen until studs are proper length.

d. Caution: Do not over-stretch studs because joint parts may fail.

4.2.4 **TIGHTENING METHOD 4** – Use Guidelines for Pressure Boundary Bolted Flange Joint Assembly (ASME PCC-1-2013)

TABLE 4.2-1	
Flange Assembly Example – Method 2	
Legacy Cross-Pattern Tightening Sequence	
Flange (# Bolts)	Pattern
4	1-3-2-4
8	1-5-3-7-2-6-4-8
12	1-5-9-3-7-11-2-6-10-4-8-12
16	1-9-5-13-3-11-7-15-2-10-6-14-4-12-8-16
20	1-13-5-17-9-3-15-7-19-11-2-14-6-18-10-4-16-8-20-12
28	1-13-21-5-17-9-25-3-15-23-7-19-11-27-2-14-22-6-18-10-26-4-16-24-8-20-12-28
32	1-17-9-25-5-21-13-25-3-19-11-31-7-29-15-27-2-18-10-30-6-22-14-26-4-20-12-32-8-24-16-28

Fig 4.2-1 Legacy Cross-Pattern Tightening Sequence for 8 Bolt Circular Flange

a. Marked Up 8 Bolt Flange

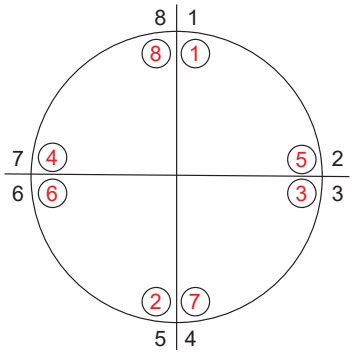

b. 1st, 2nd, and 3rd Stage Cross-Pattern Sequence

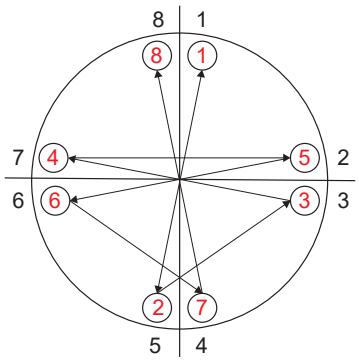

c. 4th and Final Stage Adjacent Bolt to Bolt Sequence

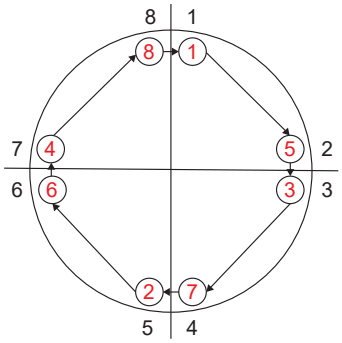

Fig 4.2-1 Notes:

- When bolt numbering is correct:
  - ◊ All bolts on right side of flange will be odd numbers (e.g. "1", "5", "3", and "7").
  - ◊ Bolts on left will be even numbers.
- For more application based procedures refer to:
  - ◊ Guidelines for Pressure Boundary Bolted Flange Joint Assembly (ASME PCC-1-2013).

4.3 Flange Disassembly (Loosen)

4.3.1 Use following when corrosion is present to minimize required torque to allow lower pump pressure and increase pump and tool life:

a. Apply Enerpac Hydraulic oil to nuts and wait for 5 minutes (minimum).

b. Heat fastener for hard applications with severe corrosion, high torque requirements, etc.:

i. Consult with equipment manufacture.

ii. Take necessary safety precautions for high temperatures (flammable materials, proper protective equipment, etc.).

iii. Be safe: allow parts to cool.

4.3.2 Loosen all nuts 1/8 turn. To increase tool and pump life, set lowest pressure which consistently works.

a. Cameron BOP Bonnet – loosen bolts in four post pattern

b. Other – loosen bolts sequentially from nut to nut

4.3.3 If torque required to initially loosen nuts was:

a. Less than 150% of tightening torque, then remaining tension may be fully removed from each stud sequentially.

b. Greater than 150% tightening torque, repeat 4.3.2.

⚠ WARNING Stud or flange damage may occur when all tension is removed from first stud without loosening others. Damage occurs because loosened stud's load is transferred to remaining studs.

4.4 Hexagon Torque Wrench Set Reaction

4.4.1 Hexagon insert must be correct size AF.

4.4.2 Hexagon nut must have full nut thickness covered by hex insert.

4.4.3 Hexagon wrench set must be square to stud center line.

4.4.4 Reaction surface must be parallel to reaction arm surface.

4.4.5 Determine if thread is right hand (RH) or left hand (LH).

4.4.6 Determine if fastener will be loosened or tightened:

a. Plan to place hexagon cassette on nut for loosening.

b. Plan to place hexagon cassette on nut for tightening (See Fig. 4.4-1 for RH thread)

Fig 4.4-1 **Correct** Reaction For Hexagon Wrench Set With Reaction Arm

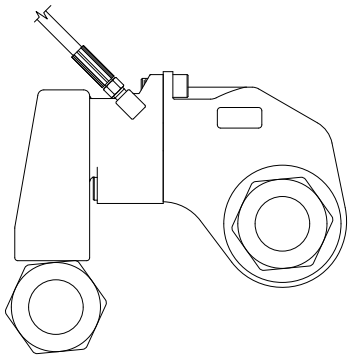

(Reaction arm must be placed as shown)

4.4.7 Fig. 4.4–1 - Proper hexagon wrench set reaction with reaction arm.

a. Preferred reaction method is to use reaction arm. A reaction arm increases reaction distance which reduces reaction force and increases tool life.

b. Contact Enerpac Customer Service, or Engineering for special reaction arms or spline covers.

c. Do not react at sharp angle on reaction arm.

i. Arrows in Fig. 4.2-2 (upper left) show this.

ii. May cause damage to spline and/or reaction arm.

iii. Contact Customer Service for these applications.

Fig 4.4-2 Hex Tool Reaction With Reaction Arm

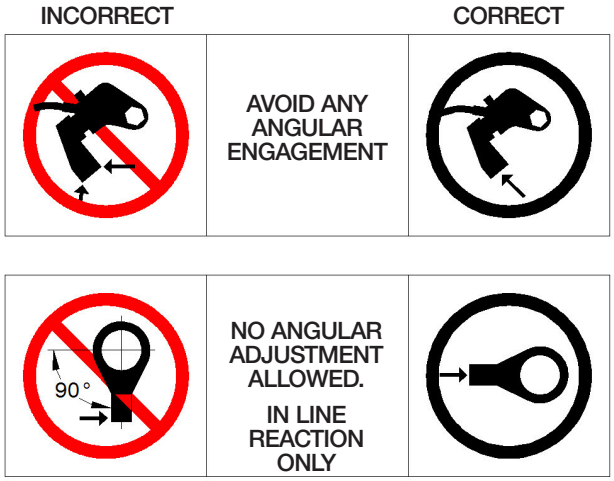

4.4 Hexagon Torque Wrench Set Reaction [continued]

4.4.8 Fig. 4.4-5 (top) shows a common reaction method where RSL reacts on torque wrench drive housing's flat surface. Note: Use reaction arm where possible to improve tool life.

WARNING Do not react against torque wrench drive splines (See Fig. 4.4-5 (bottom)). Use spline cover to prevent damage.

4.4.9 "Bump Reaction":

a. Fig. 4.4-3 shows a proper "Bump Reaction".

b. Most hexagon torque wrench sets do not have reaction bumps.

c. Fig. 4.4-4 shows a hexagon torque wrench set without a "Bump" and shows an improper reaction.

Fig 4.4-3 **Correct** Hex Tool Reaction With Reaction "Bump"

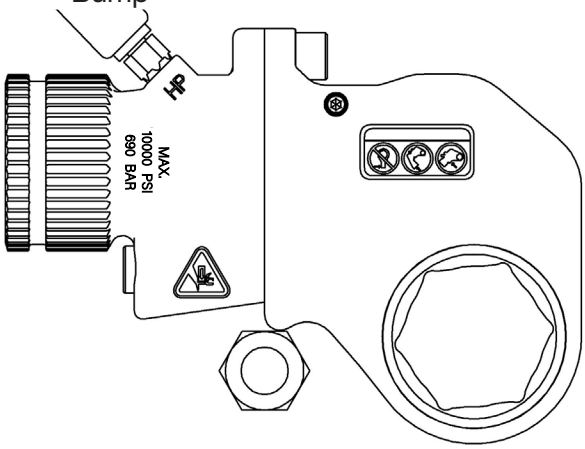

Fig 4.4-4 **Incorrect** Hex Tool Reaction With Reaction "Bump"

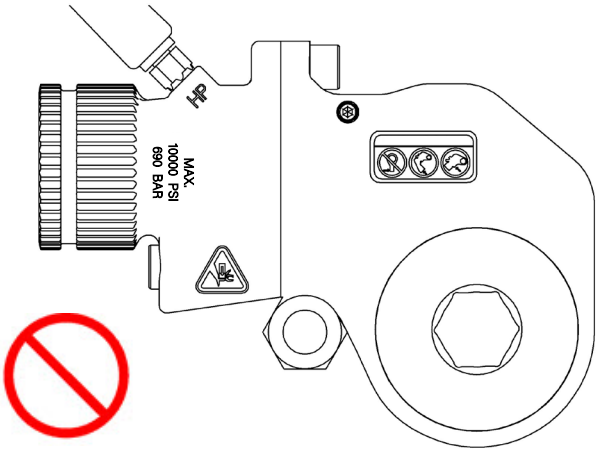

Fig 4.4-5 Hexagon Torque Wrench Set Reaction (No Reaction Arm) (Tighten Position for RH Threads)

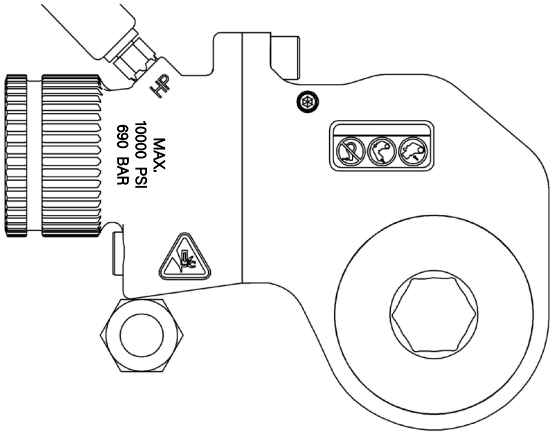

Correct Reaction

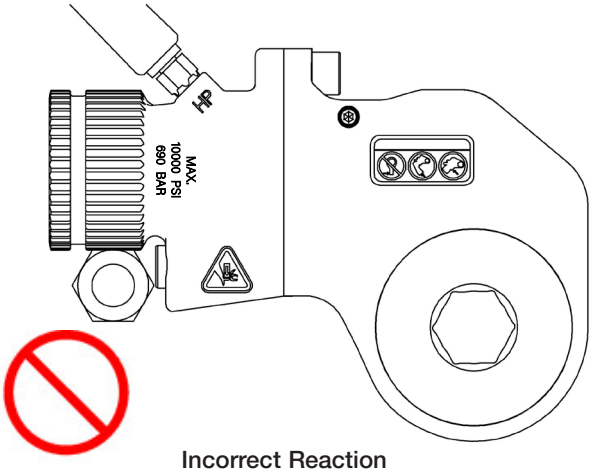

Incorrect Reaction
Do Not React On Spline

4.5 Square Drive Torque Wrench Set Reaction

4.5.1 Determine if fastener has right hand or left hand thread.

4.5.2 Determine if fastener will be loosened or tightened.

a. Plan to place square drive (sq. dr.) cassette on nut for loosening (See Figs. 4.5-1 and 4.5-2).

b. Plan to place sq. dr. cassette on nut for tightening (See Figs. 4.5-1 and 4.5-2).

4.5.3 Fig. 4.5-1 and 4.5-2 show proper sq. dr. torque wrench set reaction. Arrow by hose points to gap required for proper reaction.

4.5.4 Fig. 4.5-3 shows improper sq. dr. torque wrench set reaction

a. Improper reaction and/or incorrect socket size make tool, socket, or nut vulnerable to fracture.

b. Sq. dr. tool must use reaction arm.

c. Contact Enerpac engineering for special applications.

d. Reaction arm should be at 90 degrees and extend in same direction as sq. dr.

e. Lifting (cocking) is when a socket fits over a bolt at an angle:

i. Common cause of socket breakage

ii. May occur when reaction arm:

1. Has small engagement and operator lifts reaction arm over flange. This creates “out of square” engagement.

2. Reacts against sloped surface.

4.5.5 Check reaction with a floor test (See Fig. 4.5-2).

a. Set complete tool assembly (with socket) on floor.

b. Push down on sq. dr. retainer (down arrow) and hold.

c. Check clearance under reaction arm (left pointing arrow).

i. If gap, proper reaction

ii. If no gap, improper reaction

d. May perform test on actual applications. Angle in fig. 4.5-1 (right) must be 90 degrees.

⚠ WARNING If tool rises when load is applied, do not operate tool. Injury and/or tool damage may result.

⚠ WARNING RSL Reaction Arms **CANNOT** be welded under any circumstances.

4.5.6 Contact Enerpac Customer Service for special reaction arms for non-standard applications.

NOTICE

- Follow these instructions so maximum allowable torque is not reduced.
- If you do not follow the 1.4 units back to 1 unit down rule, contact Enerpac Service Center for tool’s reduced torque rating.
- If you have any concerns, please contact Enerpac engineering department.

4.5 Square Drive Tool Reaction [continued]

Fig 4.5-1 **Correct** Sq. Dr. Torque Wrench Set Reaction

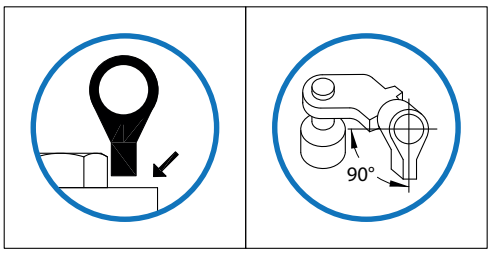

NOTICE Arrow points to required gap.

Fig 4.5-2 **Correct** Reaction (RH Threads - Sq. Dr. Tool)

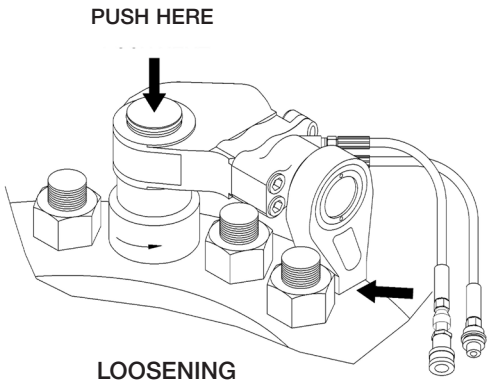

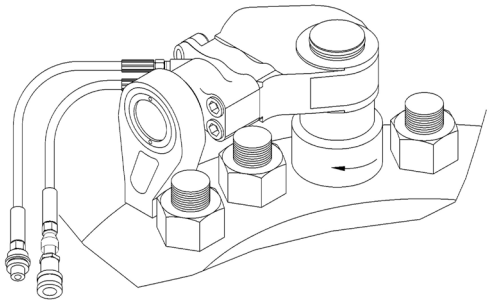

Fig 4.5-3 **Incorrect** Sq. Dr. Torque Wrench Set Reaction

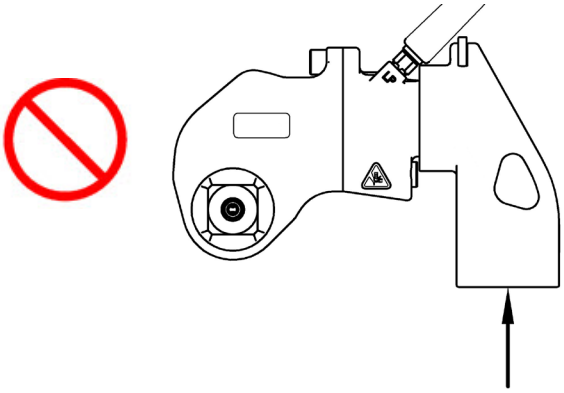

Do Not React Sq. Dr. Tool With Arm In Direction Shown - Socket May Fracture

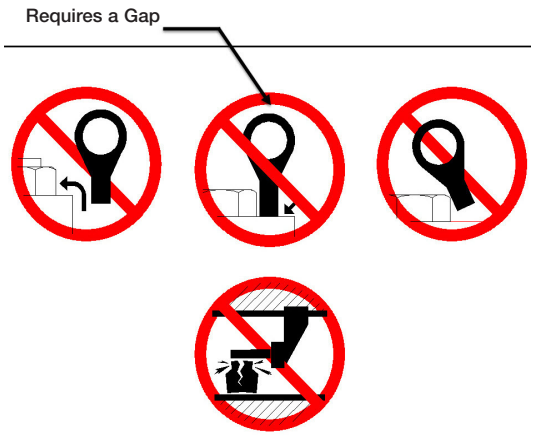

Fig 4.5-4 Extended Reaction Arm (ERA-Series)

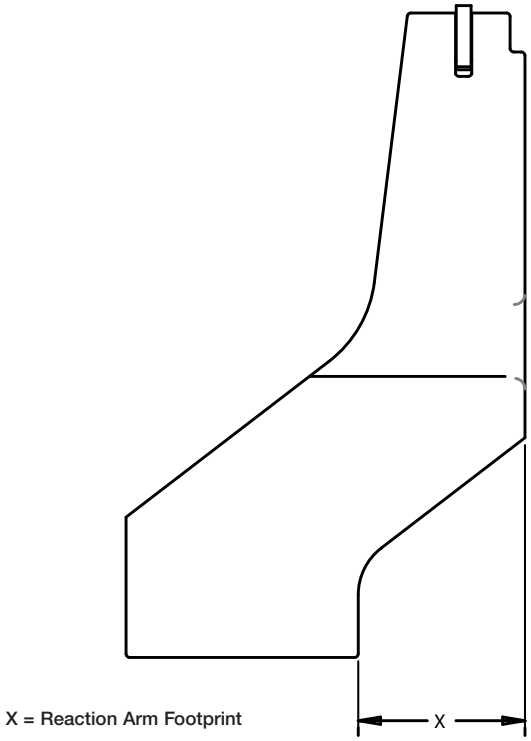

4.6 Tool Operation Instructions

4.6.1 Select proper tool and accessories (See Section 3):

a. Torque rating

b. RSQxxxxxST - Square drive cassette and torque wrench drive

i. Reaction arm, or other

ii. Square drive AF

iii. Hex bits (for socket head cap screws)

iv. Socket (for hex head cap screws and nuts):

1. Fastener AF
2. Short or long

c. RLPxxxxx – Hexagon cassette and torque wrench drive

i. Reaction arm, tube, sleeve, or other

ii. Proper hex insert

4.6.2 Change hexagon cassette insert to proper AF and cutout shape (hex, double hex, double square, etc.), etc

4.6.3 Change sq. dr. cassette to proper AF, hex bit, tightening, or loosen. Change sq. dr. insert:

a. Remove sq. dr. retainer.

i. Pull on end of retainer to release ball detents.

ii. Remove sq. dr. retainer assembly.

b. Remove and reposition and/or replace sq. dr.

c. Assemble drive retainer.

i. Pull on end of retainer to release ball detents.

ii. Insert sq. dr. retainer assembly into sq. dr.

iii. Push on end of retainer to engage ball detents.

4.6.4 Assemble torque wrench drive and wrench cassette.

a. Assemble hexagon or sq. dr. cassette per Fig. 4.6-1.

b. To assemble:

i. Must move pawl driver to retract position shown.

ii. Couple wrench cassette to torque wrench drive by hooking retractor pin into pawl driver groove.

iii. Position wrench cassette on torque wrench drive.

iv. Verify pin still engages pawl driver groove.

v. Secure wrench cassette to torque wrench drive. Torque long and short bolts according to Table 4.6-1.

4.6.5 (As needed – sq. dr.) Assemble socket to sq. dr. and secure socket to square drive with o-ring and pin.

⚠ WARNING A socket may become a falling object hazard. Secure socket to sq. dr. and keep area below tool clear.

Fig 4.6-1 Wrench Cassette and Torque Wrench Drive Assembly

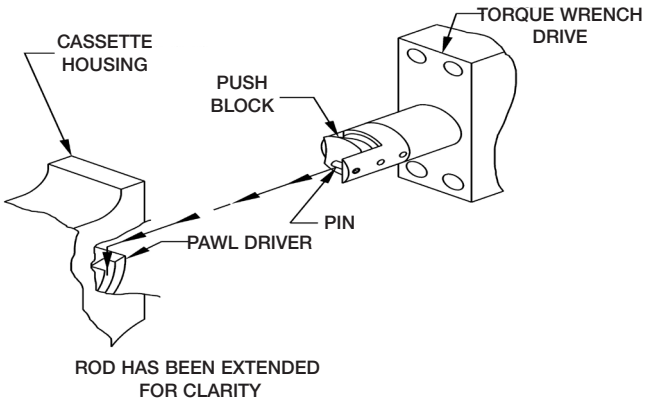

4.6 Tool Operation Instructions [continued]

4.6.6 (As needed - RSL1500 thru RSL11000) Assemble reaction arm assembly to torque wrench drive (Refer to Repair Part Sheet (RPS) for location).

a. Rotate dialock to allow reaction arm to slide onto torque wrench drive splines.

b. Slip reaction arm over torque wrench drive splines until it stops against o-ring.

c. Rotate dialock (any direction) to next "click" (60 degrees) to lock reaction arm in place.

d. Check dialock engagement - pull reaction arm.

4.6.7 (As needed - RSL19000) Assemble reaction arm assembly to torque wrench drive (Refer to RPS for location).

a. Release lock.

b. Depress retention lever.

c. Slip reaction arm over torque wrench drive splines until retention lever engages torque wrench drive groove.

d. Engage lock.

e. Check lever and lock engagement - pull reaction arm.

4.6.8 (As needed – RSL28000) Assemble reaction arm assembly to torque wrench drive. (Refer to RPS for location).

a. Adjust locking screws (turn in or out) as needed to assemble / disassemble reaction arm.

b. Lock reaction arm in place by hand tightening each locking screw until it contacts the torque wrench drive housing. Torque to 60 in*lb [6.8 Nm] max. if loosening occurs.

c. Check reaction arm is locked to torque wrench drive - pull on reaction arm.

⚠ WARNING Reaction arm must be locked to torque wrench drive before using tool.

⚠ WARNING Operator's hazard analysis may determine that reaction arm must be further retained. Contact Enerpac for Bulletin 116, which shows how to correctly tie rection arm to torque wrench drive with a cable.

4.6.9 Connect air or electrical power source to hydraulic pump. See pump manual for safety precautions and proper start up procedure.

TABLE 4.6-1

TORQUE WRENCH DRIVE BOLT TORQUE

MODEL	Long Bolts		Short Bolts	
	Ft.lbs	Nm	Ft.lbs	Nm
RSL1500	19	26	23	31
RSL3000	35	48	45	61
RSL5000	85	116	105	142
RSL8000	170	231	210	285
RSL11000	110	149	110	149
RSL19000	90	122	90	122
RSL28000	150	203	150	203

Notes:
1. Use lubricant (oil).
2. Similar bolts have different torque values because required clamp loads vary

4.6 Tool Operation Instructions [continued]

4.6.10 Assemble twin hose to pump (1st) and tool (2nd) before setting tool on application. Fig. 4.6-(2/3) and 6.1-1.

a. Always use an odd number (1, 3, 5 …) of twin hose assemblies to connect tool to pump.

b. Each end of a twin hose will have one male and one female quick connect fitting (QD).

c. Pump will have like male/female fittings.

d. Connect pump high pressure port to tool high pressure advance port.

e. Connect remaining low pressure ports.

f. Threaded QD assembly procedure (Fig. 4.6-2).

i. Pull female threaded collar back.

ii. Insert male section into female section.

iii. Screw female collar onto male section until collar solidly contacts male shoulder.

Fig 4.6-2 QD's - Threaded Type

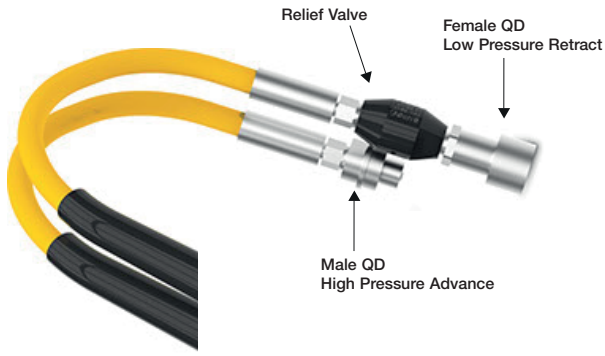

Fig 4.6-3 Torque Wrench Drive Ports

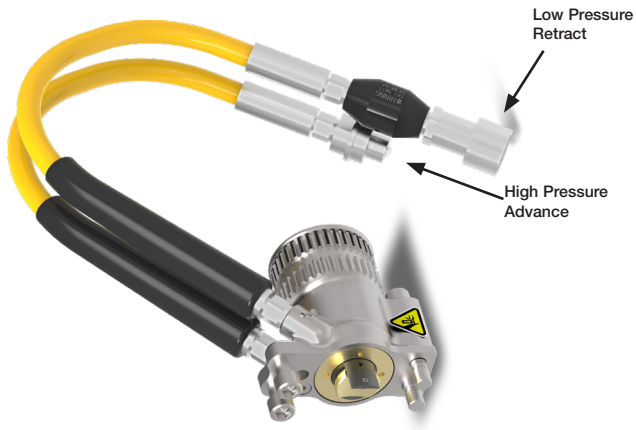

4.6.11 Purge all air from tool and hoses before returning to service. Perform a risk assessment, mitigate hazards, and follow all appropriate safety procedures during this process.

a. Purge air from hoses as needed.

i. Connect hoses from pump to each other.

ii. Turn pump on and run for one minute.

b. Purge air from tool as needed.

i. Connect torque wrench drive to pump.

ii. Place torque wrench drive below pump.

iii. Cycle tool until rod extends and retracts smoothly.

c. Repeat a. and/or b. as needed.

4.6.12 Tighten or loosen fasteners in accordance with instructions in Section 4.1 to 4.3.

a. TIGHTENING METHOD 1 - Follow equipment manufacture's procedures.

b. TIGHTENING METHOD 2 - Torque - Legacy Cross-Pattern Tightening Sequence and Bolt Numbering System – One Tool

c. TIGHTENING METHOD 3 – Stud Elongation

d. TIGHTENING METHOD 4 – See Guidelines in Pressure Boundary Bolted Flange Joint Assembly.

e. LOOSEN (BREAKOUT)

Note: Torque wrench drive, Square Drive Cassette, Socket and Reaction Arm can be moved as a unit.

Note: Remember fasteners are typically tightened, or loosened, incrementally, e.g. all fasteners are loosened 1/8 turn in a first pass.

Note: Turn pump off when moving tool.

4.6.13 Determine if fastener will be loosened or tightened. Set up tool on proper nut according to the following:

a. Tighten right hand threads: Place tool on nut so tool advance stroke will rotate nut clockwise.

b. Loosen right hand threads: Place tool on nut so tool advance stroke will rotate nut counter-clockwise.

4.6 Tool Operation Instructions [continued]

4.6.14 Reaction and tool leak check:

a. Check that reaction arm is in firm contact with stationary object (e.g. nut, flange, or housing).

b. For new applications:

i. Set pump pressure near zero to start.

ii. Gradually increase pressure and carefully watch tool for proper reaction and oil leaks.

1. If tool reacts improperly (e.g. Lifts over reaction point), re-do reaction setup.
2. If tool leaks, repair leaks immediately.

c. Set pressure to minimum required for application to maximize tool life.

4.6.15 To tightening a single fastener:

NOTICE Turn pump off when moving tool.

a. Pressure adjustment:

i. Best practice is to use minimum tool pressure to extend tool life. Do not operate at maximum when lower pressure will work.

ii. For new applications, set pump pressure near zero to start.

iii. Gradually increase pressure and carefully watch tool for proper reaction and oil leaks.

iv. If tool does not react properly (e.g. Lifts over reaction point), re-do reaction setup.

b. During this process operator must ensure reaction arm is in constant contact with reaction point. This prevents creation of a pinch point between tool and reaction point.

i. Follow all applicable safety procedures with an emphasis on those which mitigate the pinch point and high pressure hydraulics hazards.

ii. The operator may determine there are other precautions which will adequately minimize the reaction pinch point hazard.

c. Auto Cycle Pumps - see pump manual for proper operating instructions.

d. Pump - typical procedure:

i. Depress and hold pendant button until torque wrench drive makes complete advance stroke.

ii. Release pendant button to retract torque wrench drive.

iii. Continue process until tool stalls (pawl does not engage with another tooth on square driver or hex insert).

iv. Release pendant button to retract torque wrench drive.

v. Depress and hold pendant button one more time to attempt to turn nut.

vi. If nut does not turn, desired torque is achieved with related stud tension.

5 Warranty, Maintenance and Assembly

5.1 General

Recommended service intervals are:

a. 3 months – Heavy Duty use
b. 6 months – Normal use
c. 12 months – Infrequent use

Non destructive testing must be carried out if the tool has been used under severe conditions.

⚠ WARNING The RSL Torque Wrench and its individual components are to be considered long lasting consumables, that need regular testing and inspection. It is recommended that users replace the RSL and its components every 10,000 cycles.

⚠ WARNING Any part showing signs of corrosion, deformation, damage, or irregularity should be replaced immediately.

NOTICE Always assess risks and mitigate hazards while performing maintenance and assembly work.

NOTICE Follow all applicable safety procedures.

5.1.1 STORAGE: Clean and lubricate tool if stored (not used) for 5 days or more

5.1.2 SERVICE: Enerpac highly recommends customers have their tools repaired by Enerpac, or a Enerpac approved service center.

5.1.3 These Items Void Tool Warranty:

a. Failure to use Enerpac replacement parts
b. Inadequate or improper lubrication
c. Failure to replace worn or cracked parts
d. Operating tool at excessive pressure
e. Striking tool with a hammer or other impact device
f. Tool modification
g. Improper reaction method
h. See tool warranty for complete details.

5.1.4 Non Destructive Testing

a. Perform magnetic particle inspection on the following components::

i. Square Drive,
ii. Hex Insert,
iii. Housing,
iv. Pawl Driver Assembly,
v. Pawl,
vi. Square Driver,
vii. Reaction Arm.

5.2 Torque Wrench Drive Maintenance

5.2.1 If seal has small leak, replace seal because of high hydraulic pressure hazard. Refer to RPS for seal kit information.

5.2.2 Check zero leak plug / plug (Refer to RPS for location) for o-ring extrusion and/or oil leak. Re-tightening or replace plug. See notes in Section 5.3.

5.2.3 Check front cap (or end cap) for oil leak. Re-tightening cap and/or replace seal. See notes in Section 5.3.

5.2.4 Hose service life and replacement intervals:

a. Due to the wide variety of operating conditions, Enerpac cannot define or guarantee exact hose assembly:

i. Service life
ii. Inspection intervals
iii. Replacement intervals

b. As a general industry practice, the maximum recommended hose assembly service life is 6 years, including storage time of the hose assembly. This will be impacted by the application, pressure cycles, cleanliness, environment, abuse, etc.

5.2 Torque Wrench Drive Maintenance [continued]

5.2.5 Clean and lubricate bronze block and pawl driver mating surfaces. Use appropriate lubricant. Frequency:

a. Depends on work environment - increase frequency if tool is exposed to sand or other abrasive material.

b. Increase frequency with high operating pressure.

c. Increased frequency lengthens tool life.

5.2.6 Before each use:

a. Check for oil leaks and repair immediately.

b. Inspect tool structure (including splines, torque wrench drive, reaction arm, etc.) for cracks, chips, galling, or deformities. If irregularities are found, service or replace immediately.

c. Check retractor, bronze block, and retractor pin for fit.

d. Hoses and QC's:

i. Clean properly.

ii. Inspect thoroughly for damage, including underneath the strain relief's.

iii. Hoses shall be replaced if they have any damage, including, but not limited to: kinks, exposed wires, nicks, cuts, scrapes, and dents. If in doubt, replace the hose.

iv. Replace missing hose strain relief's.

e. Confirm torque wrench drive and wrench cassette are:

i. Properly engaged – Retractor pin is inserted properly in pawl driver slot

ii. Secured properly with socket head cap screws, screws torqued per Table 4.6-1

f. Inspect square drive or hex insert before each use. If irregularities are found, service or replace immediately.

5.3 Torque Wrench Drive Assembly, Testing, and Disassembly

NOTICE

- Order all replacement fasteners from Enerpac.
- Use Enerpac hydraulic oil.
- Assembly notes for torque wrench drive:

a. Before assembly:

i. Clean all components.

ii. Lubricate all interior surfaces with oil, especially seals.

iii. Replace seals and wear rings as needed.

b. For RSL1500, RSL3000, RSL5000, RSL8000, and RSL11000, torque Zero Leak Plug to 80 ±4 in*lb [9 ±.5 N*m]. Refer to RPS for location.

c. See Table 5.3-1 for spanner wrenches or front cap torque fixtures.

d. See Section 4.6 for purging air from torque wrench drive and hoses.

5.3.1 Disassemble: Model RSL1500, RSL3000, RSL5000, RSL8000, RSL11000 and RSL19000 - With Front Cap

a. Position torque wrench drive at mid stroke.

b. Install mating QD's to QD's on torque wrench drive.

c. Remove pin joining Retractor with Piston (or 10-24 x 1.5 socket head cap screw on RSL8000).

d. Remove push block and retractor.

e. Use spanner wrench to remove front cap.

f. Pull piston straight out. Do not scratch components.

5.3 Torque Wrench Drive Assembly, Testing, and Disassembly [continued]

5.3.2 Assemble: Model RSL1500, RSL3000, RSL5000, RSL8000, RSL11000 and RSL19000 - With Front Cap

a. Install seals and wear band into front cap and piston as needed.
b. Slide front cap on rod until it contacts piston.
c. Press piston into torque wrench drive bore until front cap contacts internal threads. Do not press on spherical radius surfaces.
d. Use spanner wrench to tightening front cap until firmly seated. Torque per Table 5.3-1.
e. Reinstall retractor, bronze block, and retractor pin (RSL8000 has a socket head cap screw, which is tightened to 40 in*lb and use Loctite 243).

TABLE 5.3-1		
FRONT CAP TORQUE		
MODEL	Ft.lbs	Nm
RSL1500	30	40.7
RSL3000	60	81.4
RSL5000	75	101.7
RSL8000	75	101.7
RSL11000	75	101.7
RSL19000	80	108.5
Notes: Use lubricant (light oil).		

5.3.3 Test Torque Wrench Drive Assembly: All Models

a. Follow all applicable safety rules in Section 2.
b. Connect torque wrench drive to console with hoses.
c. Place torque wrench drive in protective container.
d. Advance and retract piston three times.
e. Make sure piston moves freely.
f. Advance piston and hold at 10,000 psi [690 bar] for 5 seconds.
g. Repeat 5.3.3. f. two more times.
h. Follow proper lockout and tag policy for console and tool.
I. Check torque wrench drive, hoses, fittings, etc. for leaks.
i. No leaks: Disconnect hoses.
ii. Leaks:
   1. Fix leaks
   2. Repeat test. Start at 5.3.3.a.

5.3.4 Disassemble: Model RSL28000

a. Position torque wrench drive at mid stroke.
b. Install mating QD's to QD on torque wrench drive.
c. Remove pin joining retractor with piston.
d. Remove end cap bolts.
e. Remove end cap.
f. Pour out hydraulic oil.
g. Remove piston by pressing on its end (Do not press on spherical radius surfaces).

5.3.5 Assemble: Model RSL28000

a. Install seals and wear rings into end cap, torque wrench drive housing, and piston as needed.
b. Insert piston into cylinder to end of stroke.
c. Fill to high pressure inlet hole with hydraulic oil.
d. Assemble end cap to torque wrench drive.
i. Lubricate bolts.
ii. Tighten 22 bolts to 22 Ft.lbs.

5.4 Hexagon Cassette and Square Drive Cassette Maintenance

5.4.1 General cleaning, lubrication, and inspection guidelines:

a. During initial 8 hour break-in period clean, inspect and lubricate cassette after each hour of use. Use the inspection results to adjust the one hour interval.
b. You may increase the time between cleanings, re-lubrication, and inspections when:
i. Tool is operated at low torque/pressure.
ii. Inspections reveal minimal wear.

5.4 Hexagon Cassette and Square Drive Cassette Maintenance [continued]

c. Decrease the time between cleanings, re-lubrication, and inspections when tool is:
i. Exposed to sand or other abrasive material.
ii. Exposed to salt spray, salt water, high humidity, etc.
iii. Subject to higher operating pressure.
iv. Subject to increased usage.
d. Frequent cleanings and re-lubrication increase tool life.

Fig 5.4-1 Pawl Inspections

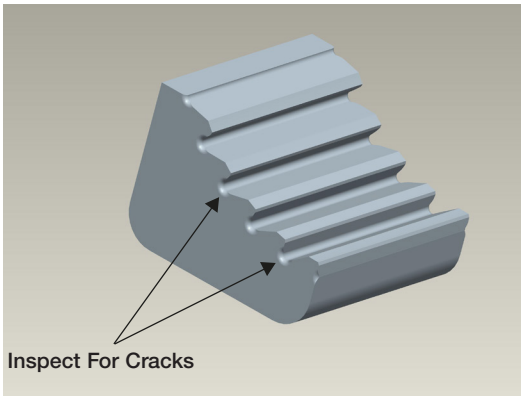

5.4.2 Check housing and all internal parts for cracks, chips, deformation, and wear.
a. Immediately replace parts which have cracks, chips, deformation, or excessive wear.
b. Inspect:
i. Square drive,
ii. Square driver,
iii. Pawl (Fig. 5.4-1),
iv. Pawl driver,
v. Pawl holding spring(s),
vi. Sq. dr. wrench housing,
vii. Hex wrench housing halves,
viii. Fasteners, etc.

5.4.3 Hexagon cassette disassembly:
a. Remove socket head cap screw joining hex wrench housings.
b. Separate housing halves to expose ratcheting assembly.
c. Inspect pawl teeth engagement (Fig. 5.4-2): It is extremely important that pawl and hex insert teeth are in precise engagement.

5.4.4 Square drive cassette disassembly:
a. Remove sq. dr. from sq. dr. housing. Section 4.6.3.
b. Remove ratcheting assembly through bottom of sq. dr. housing.
c. Inspect pawl teeth engagement (Fig. 5.4-2): It is extremely important that pawl and sq. dr. teeth are in precise engagement.

5.4.5 Cassette Assembly:
a. Before assembly:
i. Inspect pawl teeth engagement (Fig. 5.4-2): It is extremely important that pawl and square driver (or hex insert) teeth are in precise engagement.
ii. Replace worn, cracked, damaged, etc. parts.
iii. Clean all components.
iv. Lubricate all moving surfaces with appropriate lubricant.
b. Reverse cassette disassembly steps.

Fig 5.4-2 Pawl Inspections

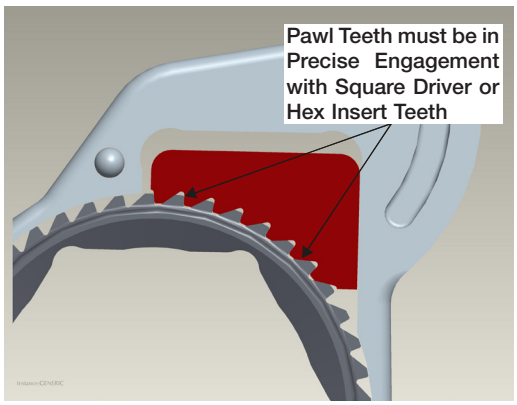

6 Troubleshooting

Symptom	Cause	Remedy
Hydraulic fluid leaks from torque wrench drive.	Torque wrench drive seals are worn.	Replace torque wrench drive seals.
• Torque wrench drive rod does not extend or retract. • Pump gauge shows hydraulic pressure. • Pump is running.	1. Quick connect couplings are: a. Improperly assembled. b. Worn and not properly engaged. 2. Piston seal is worn and hydraulic fluid is leaking past piston.	1. Clean and properly connect couplings. Use pliers to tightening screw-on type. 2. Replace worn couplings. 3. Change piston seal.
Torque wrench drive rod does not fully extend when tool is not mounted on a stud.	1. Low console fluid level. 2. Air in hoses.	1. Add proper hydraulic fluid. See pump manual. 2. Remove air. See Section 4.6.11.
• Torque wrench drive rod does not extend or retract. • Pump gauge reads zero. • Pump is running.	1. Air valve sticks due to: a. Moisture, or dirt in air supply. b. Valve corrosion. 2. Solenoid valve sticks.	1. See pump manual. 2. If possible, install valve upgrade. 3. Air valve: a. Clean air valve. b. Service air line filter 4. Solenoid valve: a. Clean solenoid valve. b. Check line voltage.
Tool operates backwards. Advance stroke button retracts piston rod.	QC's are reversed on hoses, pump, or torque wrench drive.	Properly install QC's.
Tool does not operate even though pump is running and all connections are properly connected.	1. Improper torque wrench drive and wrench assembly. 2. Retractor pin is sheared.	1. Assemble correctly. 2. Replace retractor pin.
Wrench operation sluggish and/ or noisy.	Poor lubrication.	1. Disassemble wrench. 2. Clean and inspect. 3. Replace broken parts as needed. 4. Lubricate all moving surfaces.
Nut partially returns with socket when torque wrench drive retracts.	Torsion on stud is causing nut to return with stud.	Properly lubricate stud and nut threads.
Nut rotates with socket for torque wrench drive extension and returns to starting position on retraction.	• Nut too loose and thread friction will not overcome pawl spring. • Tool loses “ratchet” capability.	Tighten nut sufficiently before using tool.
Nut does not rotate as many degrees as wrench (or socket).	1. Tool is not level or perpendicular to stud centerline (“out of square” engagement). 2. Nut corners are rounded off. 3. Socket or hex insert is over-size.	1. Reposition tool and/ or reaction arm so it is level and perpendicular to stud centerline (perform “floor test”). 2. Replace nut. 3. Use smaller socket or hex insert.

6.1 General Hydraulic Trouble Shooting

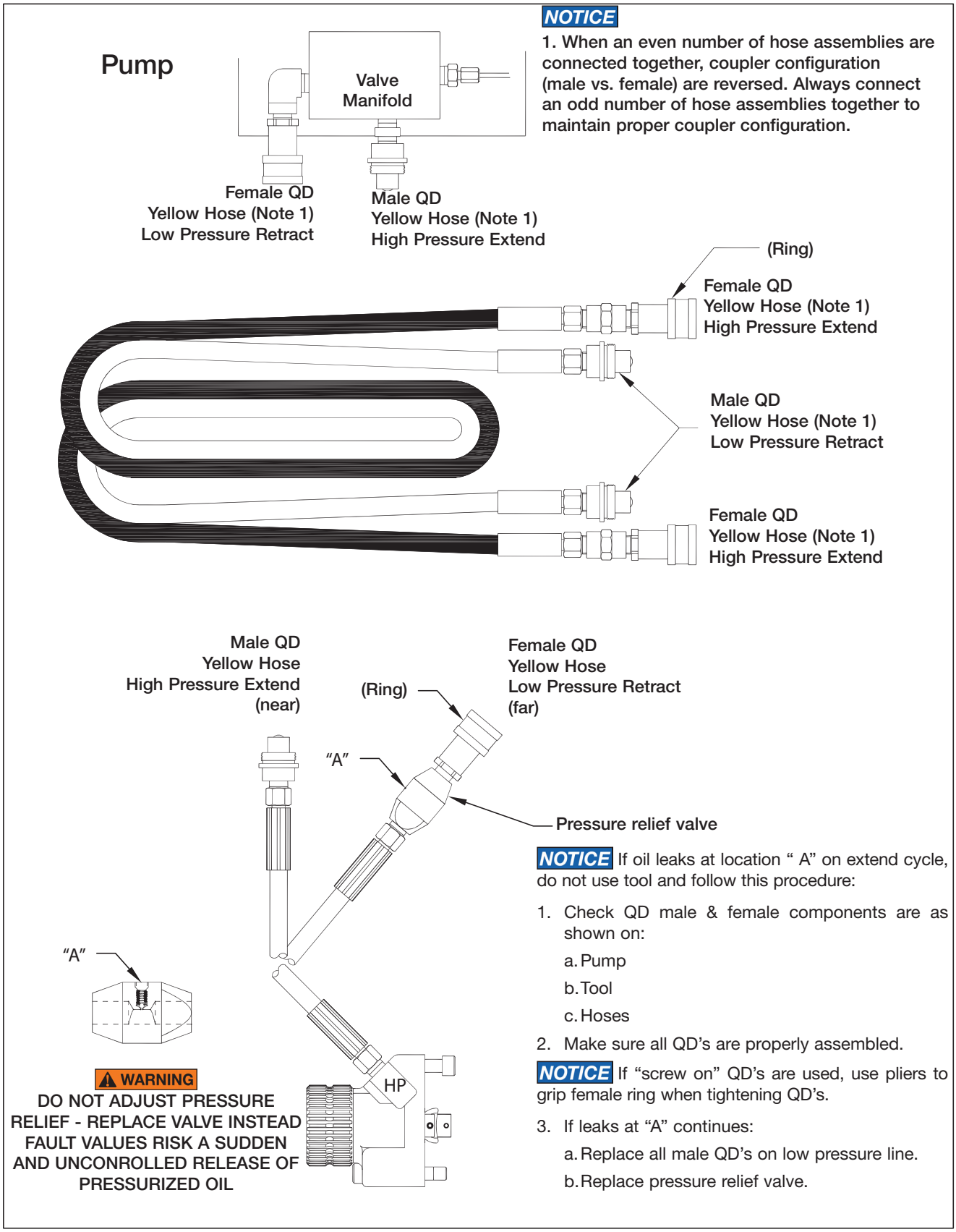

Fig 6.1-1 General Hydraulic Trouble Shooting

7 Technical Specifications

7.1 Hexagon Torque Wrench Set Capacities, Dimensions and Additional Product Data

			RLP1	RLP3	RLP5	RLP8
Hexagon size range of available cassettes		inch	7/8 - 2 3/8	1 5/16 - 2 15/16	1 11/16 - 3 1/8	2 3/8 - 3 1/8
		mm	26 - 60	33 - 75	46 - 80	60 - 80
Maximum operating pressure		psi	10,000	10,000	10,000	10,000
		bar	690	690	690	690
Max. torque	at 10,000 psi	Ft.lbs	1408	3080	5303	7862
	at 690 bar	Nm	1909	4176	7190	10,659
Weight			(See Sections 7.2.1 through 7.2.2)			
Dimensions			(See Sections 7.2.1 through 7.2.2)			

			RLP11	RLP19	RLP28
Hexagon size range of available cassettes		inch	2 7/16 - 4 5/8	2 15/16 - 4 5/8	3 1/8 - 6 1/8
		mm	62 - 110	75 - 115	80 - 155
Maximum operating pressure		psi	10,000	10,000	10,000
		bar	690	690	690
Max. torque	at 10,000 psi	Ft.lbs	11,154	18,843	28,002
	at 690 bar	Nm	15,123	25,547	37,965
Weight, Cassette			(See Sections 7.2.1 through 7.2.2)		
Dimensions			(See Sections 7.2.1 through 7.2.2)		

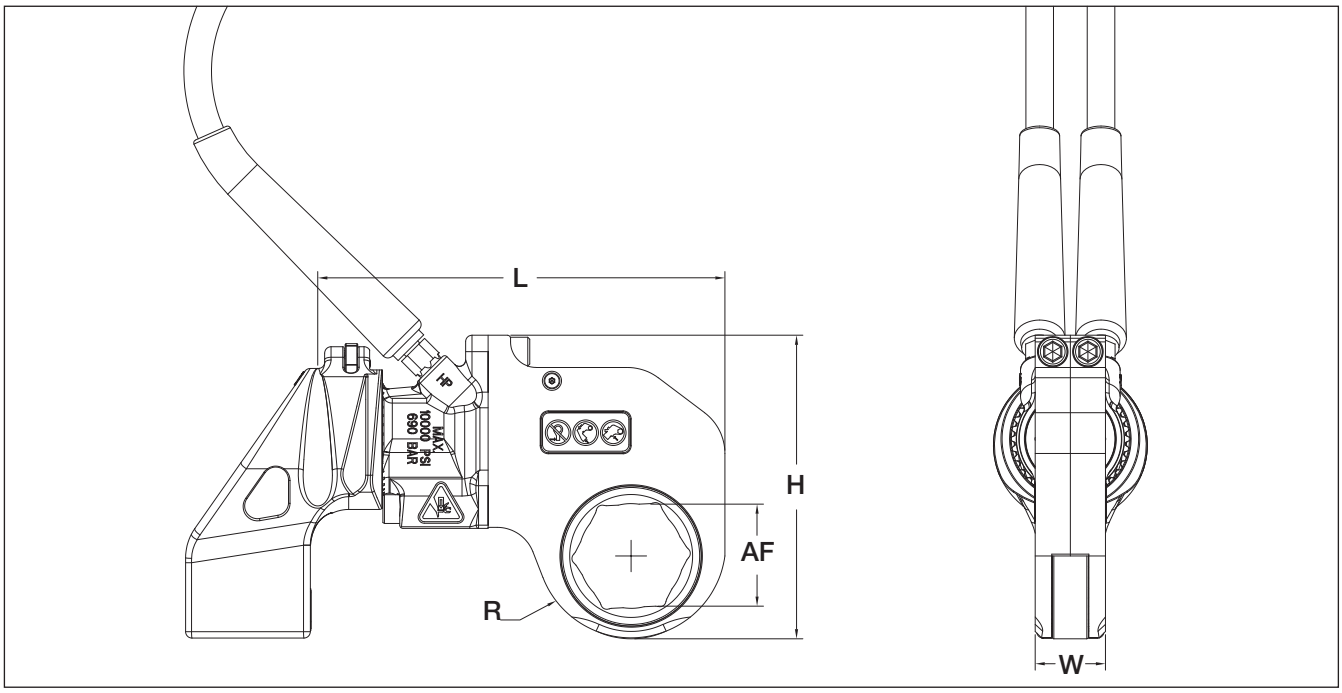

Fig. 7.1-1

7.2 Additional Hexagon Cassette Specifications

7.2.1 Imperial System Table - RSL Hexagon Cassette (see Fig. 7.1-1 for locations of dimensions AF, R, L, H and W)

Size Model	AF Hex size inch (Max)	(R) inch	(L) inch	(H) inch	(W) inch	Weight lbs
RLP1 (to be used with Torque Wrench Drive RSL1500)						
RLP1014	7/8	0.79	6.00	1.25	4.33	2.2
RLP1101	1 1/16	0.95	6.05	1.25	4.50	2.2
RLP1102	1 1/8	1.03	6.12	1.25	4.57	2.3
RLP1103	1 3/16	1.03	6.12	1.25	4.57	2.3
RLP1104	1 1/4	1.03	6.12	1.25	4.57	2.3
RLP1105	1 5/16	1.15	6.24	1.25	4.69	2.4
RLP1106	1 3/8	1.15	6.24	1.25	4.69	2.4
RLP1107	1 7/16	1.15	6.24	1.25	4.69	2.4
RLP1108	1 1/2	1.31	6.41	1.25	4.86	2.7
RLP1109	1 9/16	1.31	6.41	1.25	4.86	2.7
RLP1110	1 5/8	1.31	6.41	1.25	4.86	2.7
RLP1111	1 11/16	1.40	6.49	1.25	4.94	2.7
RLP1112	1 3/4	1.40	6.49	1.25	4.94	2.7
RLP1113	1 13/16	1.40	6.49	1.25	4.94	2.7
RLP1114	1 7/8	1.48	6.58	1.25	5.03	2.7
RLP1115	1 15/16	1.48	6.58	1.25	5.03	2.7
RLP1200	2	1.48	6.58	1.25	5.03	2.7
RLP1201	2 1/16	1.58	6.68	1.25	5.13	2.7
RLP1202	2 1/8	1.58	6.68	1.25	5.13	2.7
RLP1203	2 3/16	1.58	6.68	1.25	5.13	2.7
RLP1204	2 1/4	1.70	6.79	1.25	5.24	2.8
RLP1205	2 5/16	1.70	6.79	1.25	5.24	2.8
RLP1206	2 3/8	1.70	6.79	1.25	5.24	2.8
RLP3 (to be used with Torque Wrench Drive RSL3000)						
RLP3105	1 5/16	1.18	7.62	1.38	5.49	3.5
RLP3106	1 3/8	1.18	7.62	1.38	5.49	3.5
RLP3107	1 7/16	1.18	7.62	1.38	5.49	3.5
RLP3108	1 1/2	1.32	7.77	1.38	5.63	3.9
RLP3109	1 9/16	1.32	7.77	1.38	5.63	3.9
RLP3110	1 5/8	1.32	7.77	1.38	5.63	3.9
RLP3111	1 11/16	1.47	7.87	1.38	5.78	4.0
RLP3112	1 3/4	1.47	7.87	1.38	5.78	4.0
RLP3113	1 13/16	1.47	7.87	1.38	5.78	4.0
RLP3114	1 7/8	1.60	8.04	1.38	5.92	4.5
RLP3115	1 15/16	1.60	8.04	1.38	5.92	4.5
RLP3200	2	1.60	8.04	1.38	5.92	4.5
RLP3201	2 1/16	1.76	8.16	1.38	6.08	4.7
RLP3202	2 1/8	1.76	8.16	1.38	6.08	4.7
RLP3203	2 3/16	1.76	8.16	1.38	6.08	4.7
RLP3204	2 1/4	1.84	8.25	1.38	6.15	4.8
RLP3205	2 5/16	1.84	8.25	1.38	6.15	4.8
RLP3206	2 3/8	1.84	8.25	1.38	6.15	4.8
RLP3207	2 7/16	1.95	8.14	1.38	6.26	4.6
RLP3208	2 1/2	1.95	8.14	1.38	6.26	4.6
RLP3209	2 9/16	1.95	8.14	1.38	6.26	4.6
RLP3210	2 5/8	2.04	8.23	1.38	6.36	4.4
RLP3211	2 11/16	2.04	8.23	1.38	6.36	4.4
RLP3212	2 3/4	2.04	8.23	1.38	6.36	4.4
RLP3213	2 13/16	2.16	8.34	1.38	6.54	4.7
RLP3214	2 7/8	2.16	8.34	1.38	6.54	4.7
RLP3215	2 15/16	2.16	8.34	1.38	6.54	4.7

7.2.1 Imperial System Table - RSL Hexagon Cassette [continued] (see Fig. 7.1-1 for locations of dimensions AF, R, L, H and W)

Size Model	AF Hex size inch (Max)	(R) inch	(L) inch	(H) inch	(W) inch	Weight lbs
RLP5 (to be used with Torque Wrench Drive RSL5000)						
RLP5111	1 11/16	1.61	9.08	1.75	6.52	6.6
RLP5112	1 3/4	1.61	9.08	1.75	6.52	6.6
RLP5113	1 13/16	1.61	9.08	1.75	6.52	6.6
RLP5114	1 7/8	1.61	9.08	1.75	6.52	6.6
RLP5115	1 15/16	1.61	9.08	1.75	6.52	6.6
RLP5200	2	1.61	9.08	1.75	6.52	6.6
RLP5201	2 1/16	1.71	9.18	1.75	6.62	6.5
RLP5202	2 1/8	1.71	9.18	1.75	6.62	6.5
RLP5203	2 3/16	1.71	9.18	1.75	6.62	6.5
RLP5204	2 1/4	1.87	9.34	1.75	6.78	7.0
RLP5205	2 5/16	1.87	9.34	1.75	6.78	7.0
RLP5206	2 3/8	1.87	9.34	1.75	6.78	7.0
RLP5207	2 7/16	2.01	9.48	1.75	6.92	7.0
RLP5208	2 1/2	2.01	9.48	1.75	6.92	7.0
RLP5209	2 9/16	2.01	9.48	1.75	6.92	7.0
RLP5210	2 5/8	2.16	9.63	1.75	7.07	7.5
RLP5211	2 11/16	2.16	9.63	1.75	7.07	7.5
RLP5212	2 3/4	2.16	9.63	1.75	7.07	7.5
RLP5213	2 13/16	2.24	9.71	1.75	7.15	7.5
RLP5214	2 7/8	2.24	9.71	1.75	7.15	7.5
RLP5215	2 15/16	2.24	9.71	1.75	7.15	7.5
RLP5300	3	2.26	9.73	1.75	7.17	7.2
RLP5301	3 1/16	2.26	9.73	1.75	7.17	7.2
RLP5302	3 1/8	2.26	9.73	1.75	7.17	7.2
RLP8 (to be used with Torque Wrench Drive RSL8000)						
RLP8206	2 3/8	1.87	9.53	2.25	7.00	8.9
RLP8207	2 7/16	2.01	9.67	2.25	7.13	9.0
RLP8208	2 1/2	2.01	9.67	2.25	7.13	9.0
RLP8209	2 9/16	2.01	9.67	2.25	7.13	9.0
RLP8210	2 5/8	2.16	9.82	2.25	7.28	9.6
RLP8211	2 11/16	2.16	9.82	2.25	7.28	9.6
RLP8212	2 3/4	2.16	9.82	2.25	7.28	9.6
RLP8213	2 13/16	2.24	9.90	2.25	7.38	9.6
RLP8214	2 7/8	2.24	9.90	2.25	7.38	9.6
RLP8215	2 15/16	2.24	9.90	2.25	7.38	9.6
RLP8300	3	2.26	9.92	2.25	7.39	9.3
RLP8301	3 1/16	2.26	9.92	2.25	7.39	9.3
RLP8302	3 1/8	2.26	9.92	2.25	7.39	9.3
RLP11 (to be used Torque Wrench Drive RSL11000)						
RLP11207	2 7/16	1.98	10.00	2.50	8.03	14.2
RLP11208	2 1/2	1.98	10.00	2.50	8.03	14.2
RLP11209	2 9/16	1.98	10.00	2.50	8.03	14.2
RLP11210	2 5/8	2.19	11.20	2.50	8.23	14.8
RLP11211	2 11/16	2.19	11.20	2.50	8.23	14.8
RLP11212	2 3/4	2.19	11.20	2.50	8.23	14.8
RLP11213	2 13/16	2.29	11.31	2.50	8.34	14.8
RLP11214	2 7/8	2.29	11.31	2.50	8.34	14.8
RLP11215	2 15/16	2.29	11.31	2.50	8.34	14.8
RLP11300	3	2.43	11.44	2.50	8.47	15.2
RLP11301	3 1/16	2.43	11.44	2.50	8.47	15.2
RLP11302	3 1/8	2.43	11.44	2.50	8.47	15.2

7.2.1 Imperial System Table - RSL Hexagon Cassette [continued] (see Fig. 7.1-1 for locations of dimensions AF, R, L, H and W)

Size Model	AF Hex size inch (Max)	(R) inch	(L) inch	(H) inch	(W) inch	Weight lbs
RLP11 (to be used with Torque Wrench Drive RSL11000)						
RLP11303	3 3/16	2.60	11.71	2.50	8.64	16.6
RLP11085M	-	2.60	11.71	2.50	8.64	16.6
RLP11304	3 1/4	2.60	11.71	2.50	8.64	16.6
RLP11305	3 5/16	2.60	11.71	2.50	8.64	16.6
RLP11306	3 3/8	2.60	11.71	2.50	8.64	16.6
RLP11307	3 7/16	2.60	11.71	2.50	8.64	16.6
RLP11308	3 1/2	2.60	11.71	2.50	8.64	16.6
RLP11090M	-	2.88	11.89	2.50	8.92	17.2
RLP11309	3 9/16	2.88	11.89	2.50	8.92	17.2
RLP11310	3 5/8	2.88	11.89	2.50	8.92	17.2
RLP11311	3 11/16	2.88	11.89	2.50	8.92	17.2
RLP11312	3 3/4	2.88	11.89	2.50	8.92	17.2
RLP11313	3 13/16	2.88	11.89	2.50	8.92	17.2
RLP11314	3 7/8	2.88	11.89	2.50	8.92	17.2
RLP11315	3 15/16	2.98	12.00	2.50	9.03	16.4
RLP11400	4	2.98	12.00	2.50	9.03	16.4
RLP11401	4 1/16	2.98	12.00	2.50	9.03	16.4
RLP11402	4 1/8	2.98	12.00	2.50	9.03	16.4
RLP11404	4 1/4	2.98	12.00	2.50	9.03	16.4
RLP11405	4 5/16	3.25	12.27	2.50	9.30	17.6
RLP11408	4 1/2	3.25	12.27	2.50	9.30	17.6
RLP11410	4 5/8	3.25	12.27	2.50	9.30	17.6
RLP19 (to be used with Torque Wrench Drive RSL19000)						
RLP19215	2 15/16	2.45	12.72	2.75	9.44	21.5
RLP19300	3	2.45	12.72	2.75	9.44	21.5
RLP19301	3 1/16	2.45	12.72	2.75	9.44	21.5
RLP19302	3 1/8	2.45	12.72	2.75	9.44	21.5
RLP19303	3 3/16	2.77	13.04	2.75	9.76	22.6
RLP19085M	-	2.77	13.04	2.75	9.76	22.6
RLP19304	3 1/4	2.77	13.04	2.75	9.76	22.6
RLP19305	3 5/16	2.77	13.04	2.75	9.76	22.6
RLP19306	3 3/8	2.77	13.04	2.75	9.76	22.6
RLP19307	3 7/16	2.77	13.04	2.75	9.76	22.6
RLP19308	3 1/2	2.77	13.04	2.75	9.76	22.6
RLP19090M	-	2.95	13.22	2.75	9.94	23.8
RLP19309	3 9/16	2.95	13.22	2.75	9.94	23.8
RLP19310	3 5/8	2.95	13.22	2.75	9.94	23.8
RLP19311	3 11/16	2.95	13.22	2.75	9.94	23.8
RLP19312	3 3/4	2.95	13.22	2.75	9.94	23.8
RLP19313	3 13/16	2.95	13.22	2.75	9.94	23.8
RLP19314	3 7/8	2.95	13.22	2.75	9.94	23.8
RLP19315	3 15/16	3.30	13.57	2.75	10.28	25.3
RLP19400	4	3.30	13.57	2.75	10.28	25.3
RLP19401	4 1/16	3.30	13.57	2.75	10.28	25.3
RLP19402	4 1/8	3.30	13.57	2.75	10.28	25.3
RLP19403	4 3/16	3.30	13.57	2.75	10.28	25.3
RLP19404	4 1/4	3.30	13.57	2.75	10.28	25.3
RLP19405	4 5/16	3.44	13.71	2.75	10.43	25.6
RLP19406	4 3/8	3.44	13.71	2.75	10.43	25.6
RLP19407	4 7/16	3.44	13.71	2.75	10.43	25.6
RLP19408	4 1/2	3.44	13.71	2.75	10.43	25.6

7.2.1 Imperial System Table - RSL Hexagon Cassette [continued] (see Fig. 7.1-1 for locations of dimensions AF, R, L, H and W)

Size Model	AF Hex size inch (Max)	(R) inch	(L) inch	(H) inch	(W) inch	Weight lbs
RLP19 (to be used with Torque Wrench Drive RSL19000)						
RLP19115M	-	3.44	13.71	2.75	10.43	25.6
RLP19409	4 9/16	3.44	13.71	2.75	10.43	25.6
RLP19410	4 5/8	3.44	13.71	2.75	10.43	25.6
RLP28 (to be used Torque Wrench Drive RSL28000)						
RLP28302	3 1/8	2.56	14.36	3.00	10.54	27.6
RLP28303	3 3/16	2.56	14.36	3.00	10.54	27.6
RLP28085M	-	2.56	14.36	3.00	10.54	27.6
RLP28304	3 1/4	2.56	14.36	3.00	10.54	27.6
RLP28305	3 5/16	2.56	14.36	3.00	10.54	27.6
RLP28306	3 3/8	2.56	14.36	3.00	10.54	27.6
RLP28307	3 7/16	2.56	14.36	3.00	10.54	27.6
RLP28308	3 1/2	2.56	14.36	3.00	10.54	27.6
RLP28090M	-	2.92	14.36	3.00	10.77	28.8
RLP28309	3 9/16	2.92	14.36	3.00	10.77	28.8
RLP28310	3 5/8	2.92	14.36	3.00	10.77	28.8
RLP28311	3 11/16	2.92	14.36	3.00	10.77	28.8
RLP28312	3 3/4	2.92	14.36	3.00	10.77	28.8
RLP28313	3 13/16	2.92	14.36	3.00	10.77	28.8
RLP28314	3 7/8	2.92	14.36	3.00	10.77	28.8
RLP28315	3 15/16	3.29	14.47	3.00	11.14	31.7
RLP28400	4	3.29	14.47	3.00	11.14	31.7
RLP28401	4 1/16	3.29	14.47	3.00	11.14	31.7
RLP28402	4 1/8	3.29	14.47	3.00	11.14	31.7
RLP28403	4 3/16	3.29	14.47	3.00	11.14	31.7
RLP28404	4 1/4	3.29	14.47	3.00	11.14	31.7
RLP28405	4 5/16	3.43	14.61	3.00	11.28	31.5
RLP28406	4 3/8	3.43	14.61	3.00	11.28	31.5
RLP28407	4 7/16	3.43	14.61	3.00	11.28	31.5
RLP28408	4 1/2	3.43	14.61	3.00	11.28	31.5
RLP28115M	-	3.43	14.61	3.00	11.28	31.5
RLP28409	4 9/16	3.43	14.61	3.00	11.28	31.5
RLP28410	4 5/8	3.43	14.61	3.00	11.28	31.5
RLP28412	4 3/4	3.65	14.83	3.00	11.50	33.5
RLP28123M	-	3.65	14.83	3.00	11.50	33.5
RLP28414	4 7/8	3.65	14.83	3.00	11.50	33.5
RLP28500	5	3.65	14.83	3.00	11.50	33.5
RLP28502	5 1/8	3.79	14.97	3.00	11.64	33.2
RLP28503	5 3/16	3.79	14.97	3.00	11.64	33.2
RLP28504	5 1/4	3.79	14.97	3.00	11.64	33.2
RLP28506	5 3/8	3.79	14.97	3.00	11.64	33.2
RLP28508	5 1/2	4.05	15.23	3.00	11.90	33.5
RLP28509	5 9/16	4.05	15.23	3.00	11.90	33.5
RLP28510	5 5/8	4.05	15.23	3.00	11.90	33.5
RLP28512	5 3/4	4.05	15.23	3.00	11.90	33.5
RLP28514	5 7/8	4.22	15.48	3.00	12.15	34.5
RLP28600	6	4.22	15.48	3.00	12.15	34.5
RLP28602	6 1/8	4.22	15.48	3.00	12.15	34.5

7.2.2 Metric System Table - RSL Hexagon Cassette (see Fig. 7.1-1 for locations of dimensions AF, R, L, H and W)

Size Model	AF Hex size mm (Max)	(R) mm	(L) mm	(H) mm	(W) mm	Weight kg
RLP1 (to be used with Torque Wrench Drive RSL1500)						
RLP1014	–	20.1	152.4	31.8	110.0	1.0
RLP1101	26	24.1	153.7	31.8	114.3	1.0
RLP1102	–	26.2	155.4	31.8	116.1	1.0
RLP1103	30	26.2	155.4	31.8	116.1	1.0
RLP1104	32	26.2	155.4	31.8	116.1	1.0
RLP1105	33	29.2	158.5	31.8	119.1	1.1
RLP1106	35	29.2	158.5	31.8	119.1	1.1
RLP1107	36	29.2	158.5	31.8	119.1	1.1
RLP1108	38	33.3	162.8	31.8	123.4	1.2
RLP1109	–	33.3	162.8	31.8	123.4	1.2
RLP1110	41	33.3	162.8	31.8	123.4	1.2
RLP1111	–	35.6	164.8	31.8	125.5	1.2
RLP1112	–	35.6	164.8	31.8	125.5	1.2
RLP1113	46	35.6	164.8	31.8	125.5	1.2
RLP1114	–	37.6	167.1	31.8	127.8	1.2
RLP1115	–	37.6	167.1	31.8	127.8	1.2
RLP1200	50	37.6	167.1	31.8	127.8	1.2
RLP1201	–	40.1	169.7	31.8	130.3	1.2
RLP1202		40.1	169.7	31.8	130.3	1.2
RLP1203	55	40.1	169.7	31.8	130.3	1.2
RLP1204	–	43.2	172.5	31.8	133.1	1.3
RLP1205	–	43.2	172.5	31.8	133.1	1.3
RLP1206	60	43.2	172.5	31.8	133.1	1.3
RLP3 (to be used with Torque Wrench Drive RSL3000)						
RLP3105	33	30.0	193.5	35.1	139.4	1.6
RLP3106	35	30.0	193.5	35.1	139.4	1.6
RLP3107	36	30.0	193.5	35.1	139.4	1.6
RLP3108	38	33.5	197.4	35.1	143.0	1.8
RLP3109	–	33.5	197.4	35.1	143.0	1.8
RLP3110	41	33.5	197.4	35.1	143.0	1.8
RLP3111	–	37.3	199.9	35.1	146.8	1.8
RLP3112	–	37.3	199.9	35.1	146.8	1.8
RLP3113	46	37.3	199.9	35.1	146.8	1.8
RLP3114	–	40.6	204.2	35.1	150.4	2.0
RLP3115	–	40.6	204.2	35.1	150.4	2.0
RLP3200	50	40.6	204.2	35.1	150.4	2.0
RLP3201	–	44.7	207.3	35.1	154.4	2.1
RLP3202	–	44.7	207.3	35.1	154.4	2.1
RLP3203	55	44.7	207.3	35.1	154.4	2.1
RLP3204	–	46.7	209.6	35.1	156.2	2.2
RLP3205	–	46.7	209.6	35.1	156.2	2.2
RLP3206	60	46.7	209.6	35.1	156.2	2.2
RLP3207	62	49.5	206.8	35.1	159.0	2.1
RLP3208	63	49.5	206.8	35.1	159.0	2.1
RLP3209	65	49.5	206.8	35.1	159.0	2.1
RLP3210	–	51.8	209.0	35.1	161.5	2.0
RLP3211	–	51.8	209.0	35.1	161.5	2.0
RLP3212	70	51.8	209.0	35.1	161.5	2.0
RLP3213	–	54.9	211.8	35.1	166.1	2.1
RLP3214	–	54.9	211.8	35.1	166.1	2.1
RLP3215	75	54.9	211.8	35.1	166.1	2.1

7.2.2 Metric System Table - RSL Hexagon Cassette [continued] (see Fig. 7.1-1 for locations of dimensions AF, R, L, H and W)

Size Model	AF Hex size mm (Max)	(R) mm	(L) mm	(H) mm	(W) mm	Weight kg
RLP5 (to be used with Torque Wrench Drive RSL5000)						
RLP5111	–	40.9	230.6	44.5	165.6	3.0
RLP5112	–	40.9	230.6	44.5	165.6	3.0
RLP5113	46	40.9	230.6	44.5	165.6	3.0
RLP5114	–	40.9	230.6	44.5	165.6	3.0
RLP5115	–	40.9	230.6	44.5	165.6	3.0
RLP5200	50	40.9	230.6	44.5	165.6	3.0
RLP5201	–	43.4	233.2	44.5	168.1	2.9
RLP5202	–	43.4	233.2	44.5	168.1	2.9
RLP5203	55	43.4	233.2	44.5	168.1	2.9
RLP5204	–	47.5	237.2	44.5	172.2	3.2
RLP5205	–	47.5	237.2	44.5	172.2	3.2
RLP5206	60	47.5	237.2	44.5	172.2	3.2
RLP5207	–	51.1	240.8	44.5	175.8	3.2
RLP5208	63	51.1	240.8	44.5	175.8	3.2
RLP5209	65	51.1	240.8	44.5	175.8	3.2
RLP5210	–	54.9	244.6	44.5	179.6	3.4
RLP5211	–	54.9	244.6	44.5	179.6	3.4
RLP5212	70	54.9	244.6	44.5	179.6	3.4
RLP5213	–	56.9	246.6	44.5	181.6	3.4
RLP5214	–	56.9	246.6	44.5	181.6	3.4
RLP5215	75	56.9	246.6	44.5	181.6	3.4
RLP5300	–	57.4	247.1	44.5	182.1	3.3
RLP5301	–	57.4	247.1	44.5	182.1	3.3
RLP5302	80	57.4	247.1	44.5	182.1	3.3
RLP8 (to be used with Torque Wrench Drive RSL8000)						
RLP8206	60	47.5	242.1	57.2	177.8	4.0
RLP8207	62	51.1	245.6	57.2	181.1	4.1
RLP8208	63	51.1	245.6	57.2	181.1	4.1
RLP8209	65	51.1	245.6	57.2	181.1	4.1
RLP8210	–	54.9	249.4	57.2	184.9	4.4
RLP8211	–	54.9	249.4	57.2	184.9	4.4
RLP8212	70	54.9	249.4	57.2	184.9	4.4
RLP8213	–	56.9	251.5	57.2	187.5	4.4
RLP8214	–	56.9	251.5	57.2	187.5	4.4
RLP8215	75	56.9	251.5	57.2	187.5	4.4
RLP8300	–	57.4	252.0	57.2	187.7	4.2
RLP8301	–	57.4	252.0	57.2	187.7	4.2
RLP8302	80	57.4	252.0	57.2	187.7	4.2
RLP11 (to be used Torque Wrench Drive RSL11000)						
RLP11207	62	50.3	254.0	63.5	204.0	6.4
RLP11208	–	50.3	254.0	63.5	204.0	6.4
RLP11209	65	50.3	254.0	63.5	204.0	6.4
RLP11210	–	55.6	284.5	63.5	209.0	6.7
RLP11211	–	55.6	284.5	63.5	209.0	6.7
RLP11212	70	55.6	284.5	63.5	209.0	6.7
RLP11213		58.2	287.3	63.5	211.8	6.7
RLP11214	–	58.2	287.3	63.5	211.8	6.7
RLP11215	75	58.2	287.3	63.5	211.8	6.7
RLP11300	–	61.7	290.6	63.5	215.1	6.9
RLP11301	–	61.7	290.6	63.5	215.1	6.9
RLP11302	80	61.7	290.6	63.5	215.1	6.9

7.2.2 Metric System Table - RSL Hexagon Cassette [continued] (see Fig. 7.1-1 for locations of dimensions AF, R, L, H and W)

Size Model	AF Hex size mm (Max)	(R) mm	(L) mm	(H) mm	(W) mm	Weight kg
RLP11 (to be used with Torque Wrench Drive RSL11000)						
RLP11303	–	66.0	297.4	63.5	219.5	7.5
RLP11085M	85	66.0	297.4	63.5	219.5	7.5
RLP11304	–	66.0	297.4	63.5	219.5	7.5
RLP11305	–	66.0	297.4	63.5	219.5	7.5
RLP11306	–	66.0	297.4	63.5	219.5	7.5
RLP11307	–	66.0	297.4	63.5	219.5	7.5
RLP11308	–	66.0	297.4	63.5	219.5	7.5
RLP11090M	90	73.2	302.0	63.5	226.6	7.8
RLP11309	–	73.2	302.0	63.5	226.6	7.8
RLP11310	–	73.2	302.0	63.5	226.6	7.8
RLP11311	–	73.2	302.0	63.5	226.6	7.8
RLP11312	95	73.2	302.0	63.5	226.6	7.8
RLP11313	–	73.2	302.0	63.5	226.6	7.8
RLP11314	–	73.2	302.0	63.5	226.6	7.8
RLP11315	100	75.7	304.8	63.5	229.4	7.4
RLP11400	–	75.7	304.8	63.5	229.4	7.4
RLP11401	–	75.7	304.8	63.5	229.4	7.4
RLP11402	105	75.7	304.8	63.5	229.4	7.4
RLP11404	–	75.7	304.8	63.5	229.4	7.4
RLP11405	110	82.6	311.7	63.5	236.2	8.0
RLP11408	–	82.6	311.7	63.5	236.2	8.0
RLP11410	–	82.6	311.7	63.5	236.2	8.0
RLP19 (to be used with Torque Wrench Drive RSL19000)						
RLP19215	75	62.2	323.1	69.9	239.8	9.8
RLP19300	–	62.2	323.1	69.9	239.8	9.8
RLP19301	–	62.2	323.1	69.9	239.8	9.8
RLP19302	80	62.2	323.1	69.9	239.8	9.8
RLP19303	–	70.4	331.2	69.9	247.9	10.3
RLP19085M	85	70.4	331.2	69.9	247.9	10.3
RLP19304	–	70.4	331.2	69.9	247.9	10.3
RLP19305	–	70.4	331.2	69.9	247.9	10.3
RLP19306	–	70.4	331.2	69.9	247.9	10.3
RLP19307	–	70.4	331.2	69.9	247.9	10.3
RLP19308	–	70.4	331.2	69.9	247.9	10.3
RLP19090M	90	74.9	335.8	69.9	252.5	10.8
RLP19309	–	74.9	335.8	69.9	252.5	10.8
RLP19310	–	74.9	335.8	69.9	252.5	10.8
RLP19311	–	74.9	335.8	69.9	252.5	10.8
RLP19312	95	74.9	335.8	69.9	252.5	10.8
RLP19313	–	74.9	335.8	69.9	252.5	10.8
RLP19314	–	74.9	335.8	69.9	252.5	10.8
RLP19315	100	83.8	344.7	69.9	261.1	11.5
RLP19400	–	83.8	344.7	69.9	261.1	11.5
RLP19401	–	83.8	344.7	69.9	261.1	11.5
RLP19402	105	83.8	344.7	69.9	261.1	11.5
RLP19403	–	83.8	344.7	69.9	261.1	11.5
RLP19404	–	83.8	344.7	69.9	261.1	11.5
RLP19405	110	87.4	348.2	69.9	264.9	11.6
RLP19406	–	87.4	348.2	69.9	264.9	11.6
RLP19407	–	87.4	348.2	69.9	264.9	11.6
RLP19408	–	87.4	348.2	69.9	264.9	11.6

7.2.2 Metric System Table - RSL Hexagon Cassette [continued] (see Fig. 7.1-1 for locations of dimensions AF, R, L, H and W)

Size Model	AF Hex size mm (Max)	(R) mm	(L) mm	(H) mm	(W) mm	Weight kg
RLP19 (to be used with Torque Wrench Drive RSL19000)						
RLP19115M	115	87.4	348.2	69.9	264.9	11.6
RLP19409	–	87.4	348.2	69.9	264.9	11.6
RLP19410	–	87.4	348.2	69.9	264.9	11.6
RLP28 (to be used Torque Wrench Drive RSL28000)						
RLP28302	80	65.0	364.7	76.2	267.7	12.5
RLP28303	–	65.0	364.7	76.2	267.7	12.5
RLP28304	–	65.0	364.7	76.2	267.7	12.5
RLP28305	–	65.0	364.7	76.2	267.7	12.5
RLP28085M	85	65.0	364.7	76.2	267.7	12.5
RLP28306	–	65.0	364.7	76.2	267.7	12.5
RLP28307	–	65.0	364.7	76.2	267.7	12.5
RLP28308	–	65.0	364.7	76.2	267.7	12.5
RLP28090M	90	74.2	364.7	76.2	273.6	13.1
RLP28309	–	74.2	364.7	76.2	273.6	13.1
RLP28310	–	74.2	364.7	76.2	273.6	13.1
RLP28311	–	74.2	364.7	76.2	273.6	13.1
RLP28312	95	74.2	364.7	76.2	273.6	13.1
RLP28313	–	74.2	364.7	76.2	273.6	13.1
RLP28314	–	74.2	364.7	76.2	273.6	13.1
RLP28315	100	83.6	367.5	76.2	283.0	14.4
RLP28400	–	83.6	367.5	76.2	283.0	14.4
RLP28401	–	83.6	367.5	76.2	283.0	14.4
RLP28402	105	83.6	367.5	76.2	283.0	14.4
RLP28403	–	83.6	367.5	76.2	283.0	14.4
RLP28404	–	83.6	367.5	76.2	283.0	14.4
RLP28405	110	87.1	371.1	76.2	286.5	14.3
RLP28406	–	87.1	371.1	76.2	286.5	14.3
RLP28407	–	87.1	371.1	76.2	286.5	14.3
RLP28408	–	87.1	371.1	76.2	286.5	14.3
RLP28115M	115	87.1	371.1	76.2	286.5	14.3
RLP28409	–	87.1	371.1	76.2	286.5	14.3
RLP28410	–	87.1	371.1	76.2	286.5	14.3
RLP28412	120	92.7	376.7	76.2	292.1	15.2
RLP28123M	123	92.7	376.7	76.2	292.1	15.2
RLP28414	–	92.7	376.7	76.2	292.1	15.2
RLP28500	–	92.7	376.7	76.2	292.1	15.2
RLP28502	130	96.3	380.2	76.2	295.7	15.1
RLP28503	–	96.3	380.2	76.2	295.7	15.1
RLP28504	–	96.3	380.2	76.2	295.7	15.1
RLP28506	135	96.3	380.2	76.2	295.7	15.1
RLP28508	140	102.9	386.8	76.2	302.3	15.2
RLP28509	–	102.9	386.8	76.2	302.3	15.2
RLP28510	–	102.9	386.8	76.2	302.3	15.2
RLP28512	145	102.9	386.8	76.2	302.3	15.2
RLP28514	150	107.2	393.2	76.2	308.6	15.6
RLP28600	–	107.2	393.2	76.2	308.6	15.6
RLP28602	155	107.2	393.2	76.2	308.6	15.6

7.3 BOP Hexagon Torque Wrench Set Capacities, Dimensions and Additional Product Data

			RLP1	RLP3	RLP5	RLP8
Hexagon size range of available cassettes		inch	1 1/4 - 2	2 - 2 15/16	2 3/4 - 3 1/8	2 3/16 - 3 3/16
		mm	32 - 50	50 - 75	70 - 80	55 - 80
Maximum operating pressure		psi	(See Sections 7.4.1 through 7.4.2)			
		bar				
Max. torque	see tool for max. pressure	Ft.lbs	(See Sections 7.4.1 through 7.4.2)			
		Nm				
Min. torque		Ft.lbs	(See Sections 7.4.1 through 7.4.2)			
		Nm				
Weight			(See Sections 7.4.1 through 7.4.2)			
Dimensions			(See Sections 7.4.1 through 7.4.2)			

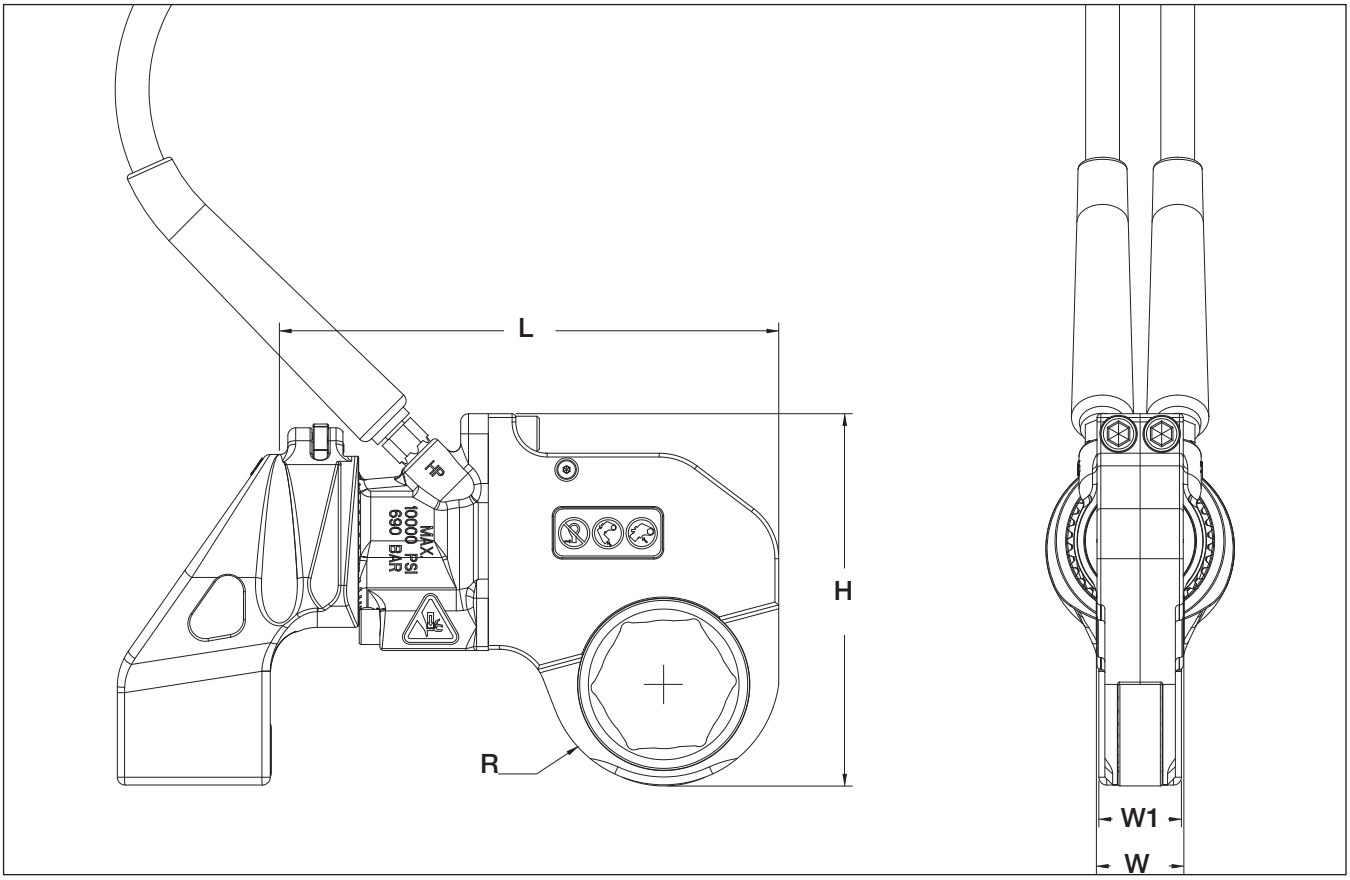

Fig. 7.3-1

7.4. Additional BOP Hexagon Cassette Specifications

7.4.1 Imperial System Table - RSL BOP Hexagon Cassette (see Fig. 7.3-1 for locations of dimensions AF, R, L, H, W and W1)

Size Model	Max Torque Ft.lbs	AF Hex size inch	(R) inch	(L) inch	(H) inch	(W) inch	(W1) inch	Weight lb
RLP1								
RLP1104SL	375	1 1/4	1.03	6.12	4.57	1.25	1.00	2.25
RLP1107SL	658	1 7/16	1.15	6.24	4.69	1.25	1.09	2.35
RLP1110SL	831	1 5/8	1.31	6.41	4.86	1.25	1.00	2.70
RLP1113SL	831	1 13/16	1.40	6.49	4.94	1.25	1.00	2.70
RLP1200SL	831	2	1048	6.58	5.03	1.25	1.00	2.70
RLP3								
RLP3200SL	1354	2	1.60	8.04	5.92	1.38	1.13	4.50
RLP3203SL	1604	2 3/16	1.76	8.16	6.08	1.38	1.13	4.65
RLP3206SL	1604	2 3/8	1.84	8.25	6.15	1.38	1.13	4.77
RLP3209SL	1604	2 9/16	1.95	8.14	6.26	1.38	1.13	4.55
RLP3212SL	1604	2 3/4	2.04	8.23	6.36	1.38	1.13	4.43
RLP3215SL	1604	2 15/16	2.16	8.34	6.54	1.38	1.13	4.70
RLP5								
RLP5212SL	4173	2 3/4	2.16	7.07	7.07	1.75	1.62	7.52
RLP5302SL	4173	3 1/8	2.26	7.17	7.17	1.75	1.62	7.20
RLP8								
RLP8203SL	2487	2 3/16	1.71	6.84	6.84	2.25	2.00	8.45
RLP8206SL	3198	2 3/8	1.87	7.00	7.00	2.25	2.00	8.90
RLP8209SL	4122	2 9/16	2.01	7.13	7.13	2.25	2.00	8.95
RLP8212SL	5587	2 3/4	2.16	7.28	7.28	2.25	2.00	9.56
RLP8215SL	5587	2 15/16	2.24	7.36	7.36	2.25	2.00	9.62
RLP8302SL	5587	3 1/8	2.26	7.39	7.39	2.25	2.00	9.29
RLP8303SL	4740	3 3/16	2.26	7.39	7.39	2.25	2.00	9.29

7.4.2 Metric System Table - RSL BOP Hexagon Cassette (see Fig. 7.3-1 for locations of dimensions AF, R, L, H, W and W1)

Size Model	Max Torque Nm	AF Hex size mm	(R) mm	(L) mm	(H) mm	(W) mm	(W1) mm	Weight kg
RLP1								
RLP1104SL	508	32	26.2	155.4	116.1	31.75	25.4	1.0
RLP1107SL	892	36	29.2	158.5	119.1	31.75	27.6	1.1
RLP1110SL	1127	41	33.4	162.8	123.4	31.75	25.4	1.2
RLP1113SL	1127	46	35.5	164.8	125.5	31.75	25.4	1.2
RLP1200SL	1127	50	37.7	167.1	127.8	31.75	25.4	1.2
RLP3								
RLP3200SL	1836	50	40.6	204.2	150.4	34.95	28.6	2.0
RLP3203SL	2175	55	44.7	207.3	154.4	34.95	28.6	2.1
RLP3206SL	2175	60	46.7	209.6	156.2	34.95	28.6	2.2
RLP3209SL	2175	65	49.5	206.8	159.0	34.95	28.6	2.1
RLP3212SL	2175	70	51.8	209.0	161.5	34.95	28.6	2.0
RLP3215SL	2175	75	54.9	211.8	166.1	34.95	28.6	2.1
RLP5								
RLP5212SL	5658	70	54.9	244.6	179.6	44.45	41.15	3.4
RLP5302SL	5658	80	57.4	247.1	182.1	44.45	41.15	3.3
RLP8								
RLP8203SL	3372	55	43.4	238.0	173.7	57.15	50.8	3.8
RLP8206SL	4336	60	47.5	242.1	177.8	57.15	50.8	4.0
RLP8209SL	5589	65	51.1	245.6	181.1	57.15	50.8	4.1
RLP8212SL	7575	70	54.9	249.4	184.9	57.15	50.8	4.3
RLP8215SL	7575	75	56.9	251.5	186.9	57.15	50.8	4.4
RLP8302SL	7575	80	57.4	252.0	187.7	57.15	50.8	4.2
RLP8303SL	6427	-	57.4	252.0	187.7	57.15	50.8	4.2

7.5 Square Drive Torque Wrench Set Dimensions and Specifications

7.5.1 Imperial System Table - RSL Square Drive Cassette

(see Fig. 7.5-1 for locations of dimensions W, W1, H, L, L1 and R)

Square Drive Model	Max Torque Output	Square Drive Size	W	W1	H	L	L1	R	Weight		
									Torque Wrench Drive	Reaction Arm	Sq Dr Cassette
	Ft.lbs	in	in	in	in	in	in	in	lb	lb	lb
RSQ1500ST	1408	3/4	1.25	2.30	4.48	6.29	7.45	0.94	3.4	1.0	2.8
RSQ3000ST	3080	1	1.50	2.88	5.57	7.67	10.30	1.25	5.6	2.2	5.2
RSQ5000ST	5303	1 1/2	1.75	3.71	6.42	9.27	11.67	1.52	8.9	4.0	9.1
RSQ8000ST	7862	1 1/2	2.40	4.14	6.65	9.47	11.78	1.52	10.6	4.3	11.6
RSQ11000ST	11,154	1 1/2	2.50	4.63	7.93	11.20	12.40	1.88	11.6	6.6	18.4
RSQ19000ST	18,843	2 1/2	3.25	6.38	9.48	13.46	18.97	2.50	20.0	15.7	28.9
RSQ28000ST	28,002	2 1/2	3.50	6.54	10.35	14.09	21.07	2.50	22.0	11.1	39.3

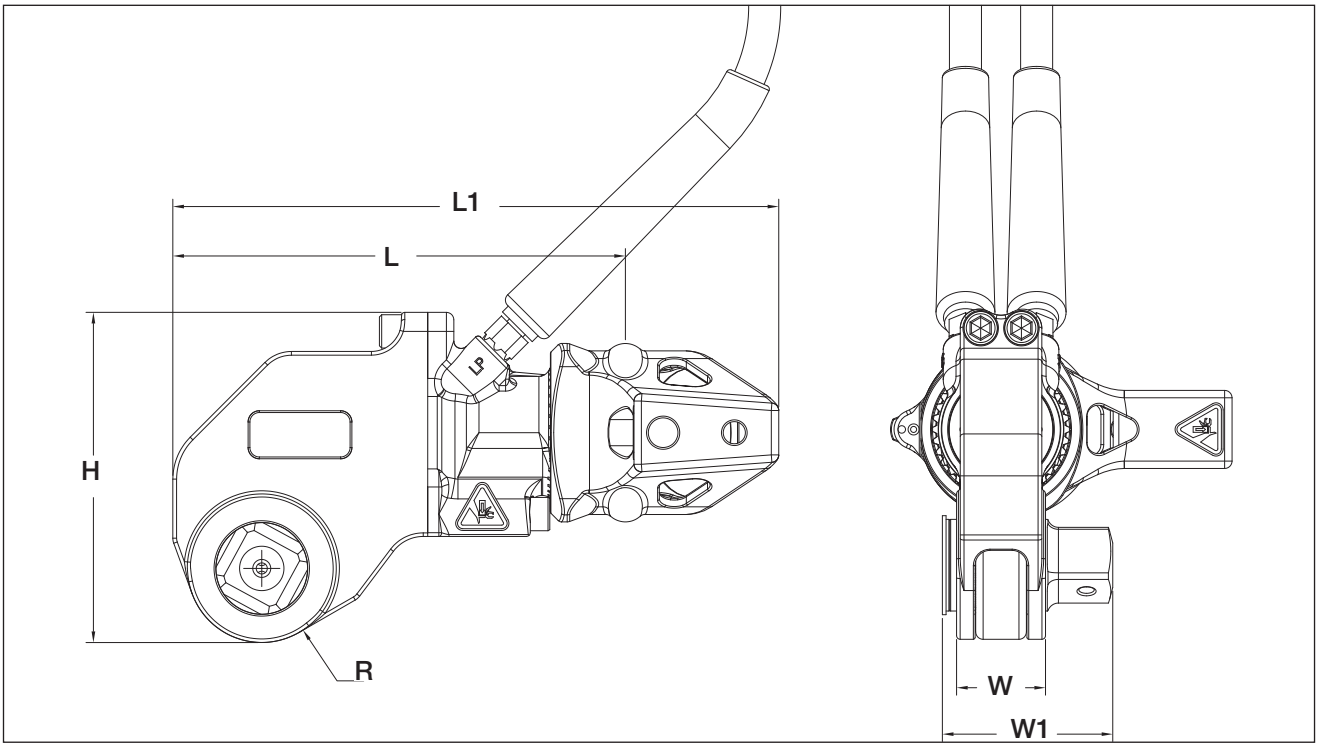

Fig. 7.5-1

7.5.2 Metric System Table - RSL Square Drive Cassette

(see Fig. 7.5-1 for locations of dimensions W, W1, H, L, L1 and R)

Square Drive Model	Max Torque Output	Square Drive Size	W	W1	H	L	L1	R	Weight		
									Torque Wrench Drive	Reaction Arm	Sq Dr Cassette
	Nm	in	mm	mm	mm	mm	mm	mm	kg	kg	kg
RSQ1500ST	1909	3/4	32	58	114	160	189	24	1.55	0.45	1.27
RSQ3000ST	4176	1	38	73	141	195	262	32	2.55	1.00	2.36
RSQ5000ST	7190	1 1/2	45	94	163	235	296	39	4.05	1.81	4.14
RSQ8000ST	10,659	1 1/2	61	105	169	241	300	39	4.82	1.95	5.27
RSQ11000ST	15,123	1 1/2	64	118	201	284	315	48	5.27	3.00	8.36
RSQ19000ST	25,547	2 1/2	863	162	241	342	482	64	9.09	7.12	13.14
RSQ28000ST	37,965	2 1/2	89	166	263	358	536	64	10.00	5.03	17.86

7.6 ERA-Series, Extended Reaction Arms Dimensions and Specifications

(see Fig. 7.6-1 for locations of dimensions A, B, C, D, and E)

For Torque Wrench Model Size	Model Number	mm					kg	inch					lb
		A	B	C	D	E	Weight	A	B	C	D	E	I
RSL1500	ERA15114	87	145	195	29	36	0.9	3.4	5.7	7.7	1.1	1.4	1.98
	ERA15228	113	181	230	29	36	1.8	4.4	7.1	9.1	1.1	1.4	3.97
	ERA15342	139	226	276	29	36	2.7	5.5	8.9	10.9	1.1	1.4	5.95
	ERA15456	164	236	286	29	36	3.6	6.5	9.3	11.3	1.1	1.4	7.94
	ERA15570	189	287	337	29	36	4.5	7.4	11.3	13.3	1.1	1.4	9.92
RSL3000	ERA30114	105	195	257	34	41	2.7	4.1	7.7	10.1	1.3	1.6	5.95
	ERA30228	131	231	293	34	41	3.6	5.2	9.1	11.5	1.3	1.6	7.94
	ERA30342	156	266	328	34	41	4.5	6.1	10.5	12.9	1.3	1.6	9.92
	ERA30456	181	302	364	34	41	5.4	7.1	11.9	14.3	1.3	1.6	11.90
RSL5000	ERA50114	131	208	284	44	48	4.1	5.2	8.2	11.2	1.7	1.9	9.04
	ERA50228	156	243	320	44	48	5.0	6.1	9.6	12.6	1.7	1.9	11.02
	ERA50342	181	279	355	44	48	5.9	7.1	11.0	14.0	1.7	1.9	13.01
	ERA50456	207	314	391	44	48	6.8	8.1	12.4	15.4	1.7	1.9	14.99
RSL11000	ERA110114	125	219	296	51	59	6.3	4.9	8.6	11.7	2.0	2.3	13.89
	ERA110228	150	255	331	51	59	7.3	5.9	10.0	13.0	2.0	2.3	16.09
	ERA110342	176	291	367	51	59	8.2	6.9	11.5	14.4	2.0	2.3	18.08
	ERA110456	201	326	402	51	59	9.1	7.9	12.8	15.8	2.0	2.3	20.06
RSL28000	ERA280228	171	335	411	57	85	11.3	6.7	13.2	16.2	2.2	3.3	24.91
	ERA280342	197	370	447	57	85	13.6	7.8	14.6	17.6	2.2	3.3	29.98

Only to be used on RSL-drive units with RSQ-square drive wrenches. Used in place of standard reaction arm.

Note: Extended Reaction Arms for RSL8000 and RSL19000 are available on request.

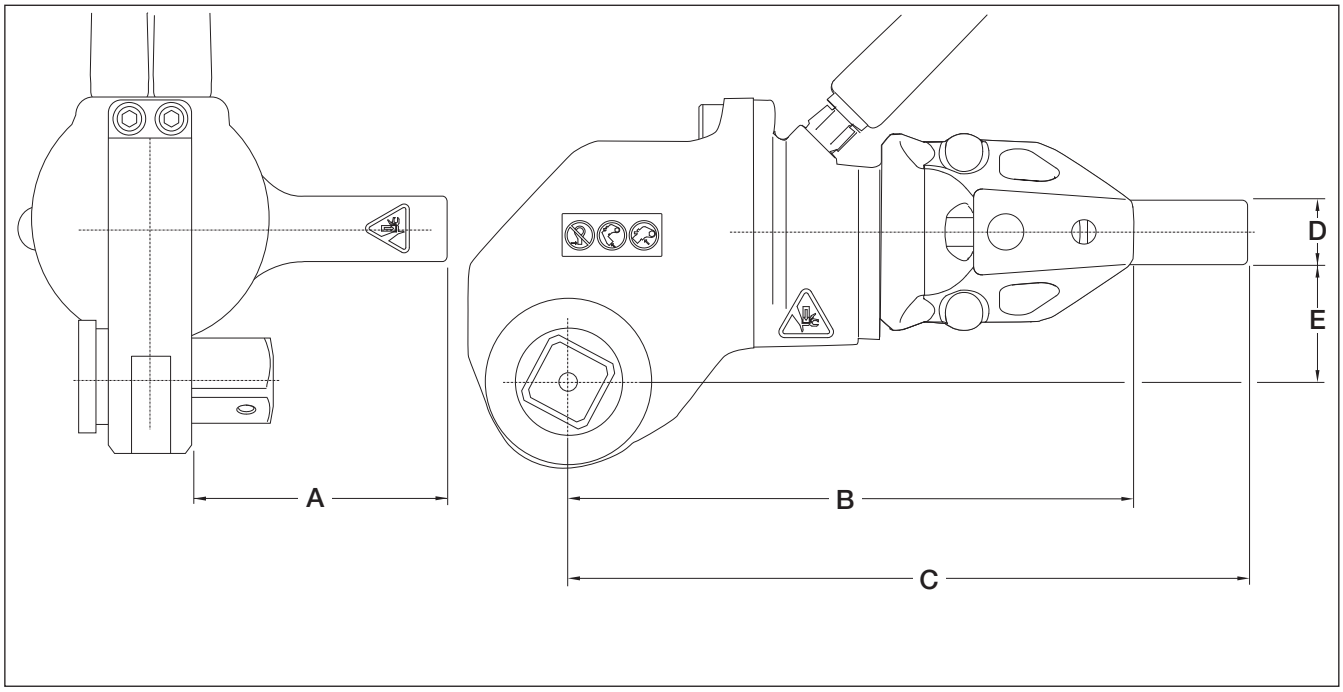

Fig. 7.6-1

7.7 ERT-Series, Extended Reaction Tubes Dimensions and Specifications

(see Fig. 7.7-1 for locations of dimensions A, B, and C)

For Torque Wrench Model Size	Model Number	mm			kg	inch			lb
		A	B	C	Weight	A	B	C	Weight
RSL1500	ERT152	157	51	57	0.9	6.2	2.0	2.2	1.98
	ERT156	259	152	57	1.6	10.2	6.0	2.2	3.53
	ERT159	335	229	57	2.5	13.2	9.0	2.2	5.51
	ERT1512	411	305	57	3.4	16.2	12.0	2.2	7.50
	ERT1524	716	610	57	6.7	28.2	24.0	2.2	14.77
RSL3000	ERT3012	429	305	70	3.0	16.9	12.0	2.8	6.61
	ERT3024	734	610	70	5.9	28.9	24.0	2.8	13.01
RSL5000	ERT5012	451	305	89	5.6	17.8	12.0	3.5	12.35
	ERT5024	756	610	89	11.3	29.8	24.0	3.5	24.91
RSL11000	ERT1106	330	152	95	2.1	13.0	6.0	3.7	4.63
	ERT11012	483	305	95	4.1	19.0	12.0	3.7	9.04
	ERT11018	635	457	95	6.1	25.0	18.0	3.7	13.45
	ERT11024	787	610	95	8.4	31.0	24.0	3.7	18.52
RSL19000	ERT19024	800	610	127	16.7	31.5	24.0	5.0	36.82
RSL28000	ERT2806	351	152	127	3.6	13.8	6.0	5.0	7.94
	ERT28012	503	305	127	7.3	19.8	12.0	5.0	16.09
	ERT28018	655	457	127	10.9	25.8	18.0	5.0	24.03
	ERT28024	808	610	127	16.6	31.8	24.0	5.0	36.60

Only to be used on RSL-drive units with RLP-hexagon cassettes. Used in place of standard reaction arm.

Note: Extended Reaction Tubes for RSL8000 are available on request.

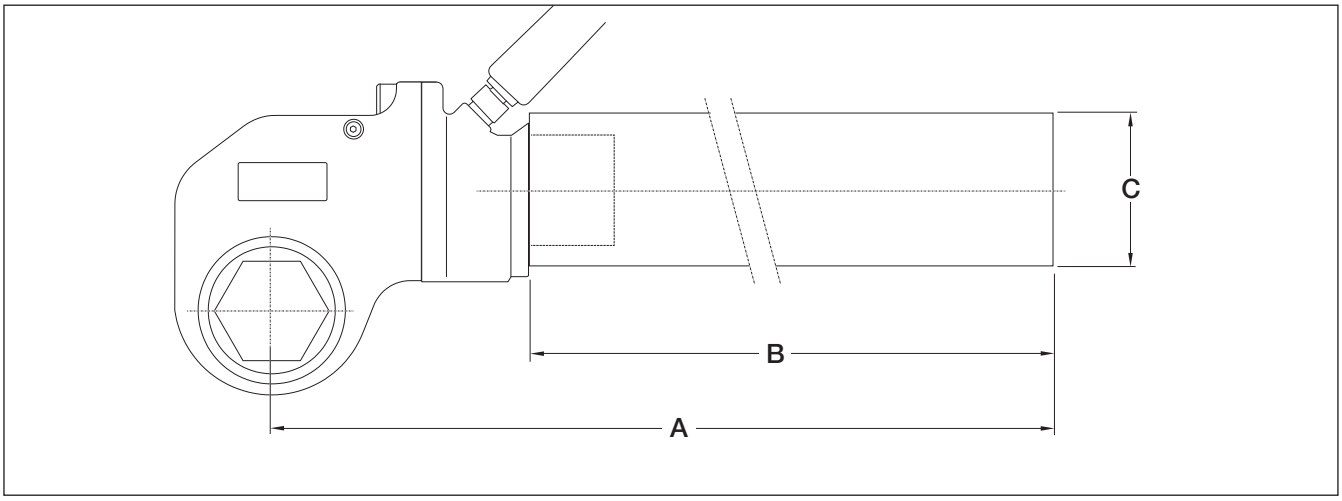

Fig. 7.7-1

7.8 Torque Settings

7.8.1 Imperial System Pressure/Torque Table

Pump Pressure (psi)	Torque (Ft.lbs)						
	RSL1500	RSL3000	RSL5000	RSL8000	RSL11000	RSL19000	RSL28000
1000	**123**	**290**	**457**	**725**	**961**	**1957**	**2298**
1200	152	352	564	884	1188	2332	2869
1400	180	414	672	1043	1414	2708	3440
1600	209	476	780	1201	1641	3083	4012
1800	238	538	888	1360	1867	3458	4583
2000	**267**	**600**	**995**	**1518**	**2094**	**3822**	**5154**
2200	296	662	1103	1677	2320	4209	5725
2400	324	724	1211	1836	2547	4584	6296
2600	353	786	1318	1994	2773	4959	6868
2800	382	848	1426	2153	3000	5334	7439
3000	**411**	**910**	**1534**	**2311**	**3226**	**5710**	**8010**
3200	439	972	1641	2470	3453	6085	8581
3400	468	1034	1749	2629	3679	6460	9152
3600	497	1096	1857	2787	3906	6853	9724
3800	525	1158	1964	2946	4132	7210	10,295
4000	**554**	**1220**	**2072**	**3104**	**4359**	**7586**	**10,866**
4200	583	1282	2180	3263	4585	7961	11,437
4400	611	1344	2288	3422	4812	8336	12,008
4600	640	1406	2395	3580	5038	8711	12,579
4800	669	1468	2503	3739	5265	9087	13,151
5000	**697**	**1530**	**2611**	**3897**	**5491**	**9462**	**13,722**
5200	726	1592	2718	4056	5718	9837	14,293
5400	754	1654	2826	4215	5944	10,212	14,864
5600	783	1716	2934	4373	6171	10,588	15,435
5800	811	1778	3041	4532	6397	10,963	16,007
6000	**840**	**1840**	**3149**	**4690**	**6624**	**11,338**	**16,578**
6200	868	1902	3257	4849	6850	11,713	17,149
6400	897	1964	3364	5008	7077	12,089	17,720
6600	925	2026	3472	5166	7303	12,464	18,291
6800	954	2088	3580	5325	7530	12,839	18,863
7000	**982**	**2150**	**3688**	**5483**	**7756**	**13,214**	**19,434**
7200	1011	2212	3795	5642	7983	13,589	20,005
7400	1039	2274	3903	5801	8209	13,965	20,576
7600	1068	2336	4011	5959	8436	14,340	21,147
7800	1096	2398	4118	6118	8662	14,715	21,719
8000	**1125**	**2460**	**4226**	**6276**	**8889**	**15,090**	**22,290**
8200	1153	2522	4334	6435	9115	15,466	22,861
8400	1181	2584	4441	6594	9342	15,841	23,432
8600	1210	2646	4549	6752	9568	16,216	24,003
8800	1238	2708	4657	6911	9795	16,591	24,575
9000	**1266**	**2770**	**4764**	**7069**	**10,021**	**16,967**	**25,146**
9200	1295	2832	4872	7228	10,248	17,342	25,717
9400	1323	2894	4980	7387	10,474	17,717	26,288
9600	1351	2956	5087	7545	10,701	18,092	26,859
9800	1380	3018	5195	7704	10,927	18,467	27,431
10,000	**1408**	**3080**	**5303**	**7862**	**11,154**	**18,843**	**28,002**

NOTICE Torque values are rounded to the nearest whole unit.

7.8.2 Metric System Pressure/Torque Table

Pump Pressure (bar)	Torque (Nm)						
	RSL1500	RSL3000	RSL5000	RSL8000	RSL11000	RSL19000	RSL28000
69	**167**	**393**	**620**	**983**	**1303**	**2653**	**3116**
83	206	477	765	1199	1611	3162	3890
97	244	561	911	1414	1917	3672	4664
110	283	645	1058	1628	2225	4180	5439
124	323	729	1204	1844	2531	4688	6214
138	**362**	**813**	**1349**	**2058**	**2839**	**5182**	**6988**
152	401	898	1495	2274	3145	5707	7762
164	439	982	1642	2489	3453	6215	8536
179	479	1066	1787	2703	3760	6723	9312
193	518	1150	1933	2919	4067	7232	10,086
207	**557**	**1234**	**2080**	**3133**	**4374**	**7742**	**10,860**
221	595	1318	2225	3349	4682	8250	11,634
234	635	1402	2371	3564	4988	8758	12,408
248	674	1486	2518	3779	5296	9267	13,184
262	712	1570	2663	3994	5602	9775	13,958
276	**751**	**1654**	**2809**	**4208**	**5910**	**10,285**	**14,732**
290	790	1738	2956	4424	6216	10,794	15,506
303	828	1822	3102	4640	6524	11,302	16,280
317	868	1906	3247	4854	6831	11,810	17,055
331	907	1990	3394	5069	7138	12,320	17,830
345	**945**	**2074**	**3540**	**5284**	**7445**	**12,829**	**18,604**
359	984	2158	3685	5499	7752	13,337	19,378
372	1022	2242	3831	5715	8059	13,845	20,153
386	1062	2327	3978	5929	8367	14,355	20,927
400	1100	2411	4123	6144	8673	14,864	21,702
414	**1139**	**2495**	**4269**	**6359**	**8981**	**15,372**	**22,476**
427	1177	2579	4416	6574	9287	15,880	23,251
441	1216	2663	4561	6790	9595	16,390	24,025
455	1254	2747	4707	7004	9901	16,899	24,799
469	1293	2831	4854	7220	10,209	17,407	25,574
483	**1331**	**2915**	**5000**	**7434**	**10,516**	**17,916**	**26,349**
496	1371	2999	5145	7649	10,823	18,424	27,123
510	1409	3083	5292	7865	11,130	18,934	27,897
524	1448	3167	5438	8079	11,438	19,442	28,671
538	1486	3251	5583	8295	11,744	19,951	29,447
552	**1525**	**3335**	**5730**	**8509**	**12,052**	**20,459**	**30,221**
565	1563	3419	5876	8725	12,358	20,969	30,995
579	1601	3503	6021	8940	12,666	21,477	31,769
593	1641	3587	6168	9154	12,972	21,986	32,543
607	1678	3672	6314	9370	13,280	22,494	33,319
621	**1716**	**3756**	**6459**	**9584**	**13,586**	**23,004**	**34,093**
634	1756	3840	6605	9800	13,894	23,512	34,867
648	1794	3924	6752	10,015	14,201	24,021	35,641
662	1832	4008	6897	10,230	14,508	24,529	36,415
676	1871	4092	7043	10,445	14,815	25,038	37,191
690	**1909**	**4176**	**7190**	**10,659**	**15,123**	**25,547**	**37,965**

NOTICE Torque values are rounded to the nearest whole unit.

8 Ordering Replacement Parts

For replacement parts information, refer to the Enerpac RPS, for your wrench model. RPS' are available on the internet at www.enerpac.com.

Have the following information ready when ordering replacement parts:

- Wrench model, serial numbers, and date code (for both torque drive unit and cassette).
- Approximate date of purchase.
- Part number and description of each part being ordered.

NOTES

NOTES

ENERPAC®

www.enerpac.com

© 2024 Enerpac, All Rights Reserved.