ELSTER® RABO®

Rotary gas meter in sizes from DN32 to DN150 (1,25” to 6”).

Honeywell Elster RABO Rotary gas meters are robust meters used to accurately and reliably measure gas flows in gas distribution, industrial plants and for commercial users.

Suitable for 100% H2 for custody transfer and non-custody transfer applications

APPLICATIONS

Honeywell Elster RABO is suitable for measuring of natural gas and various filtered, non-corrosive gases. Custody transfer approved gas flow measurement from low to high operating pressures, gas distribution, industrial and commercial applications, hydrogen applications.

BRIEF INFORMATION

General

Honeywell Elster rotary gas meters are characterized by high measuring ranges and compact dimensions. They ensure high accuracy, even if the gas flow is low or irregular. RABO combines tried-and-tested product features of previous rotary gas meters from Elster-Instromet and is a convincing product because it offers a large range of future-oriented features, like maintenance free options to operate Rabo meters without oil lubrication.

Operating Principle

Rotary gas meters are volume-measuring devices for gaseous media which operate according to the positive displacement principle. Due to their volumetric measuring principle, their functioning is not influenced by the installation and they are therefore ideal for compact measuring systems without an inlet section. They record the gas volume under operating conditions and are approved for custody transfer applications. Electronic volume conversion devices can be used to convert the volume.

Measurement Procedure

Two rotating impellers which look like a figure of eight (8) when viewed in cross-section are mounted in a single housing with one inlet and one outlet. The two impellers are coupled together using synchronizing gears. When gas flows, the impellers rotate without touching one another and propel a gas volume to the outlet which is defined by the cyclic volume. One rotation of the system thus corresponds to a defined gas volume. The revolutions of the impellers are transferred to the mechanical index via a reducing gear and a magnetic coupler. The rotary gas meter is adjusted using a pair of gears in the index. are transferred to the mechanical index via a reducing gear and a magnetic coupler. The rotary gas meter is adjusted using a pair of gears in the index.

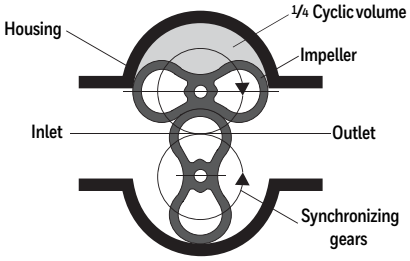

Working principle of rotary gas meters

- Meter sizes G16 to G400
- Flow rates from 0.6 to 650 m3/h
- Nominal sizes DN 32 to DN 150
- Pressure ratings PN 10/16 and Class 150 in accordance with ASME B 16.5
- Temperature range -25°C to +70°C
- Measuring ranges up to 1:200
- Aluminium or spheroidal cast iron housing
- Compact dimensions
- Maintenance free option
- Index can be rotated for horizontal and vertical installation
- Optional index solutions (e.g. Absolute ENCODER S1D)
- Approvals pursuant to MID/ PED/ATEX Directives
- EN 12480
- EC directive 2014/32/EU (MID)
- EC directive 2014/34/ EU (ATEC/IECEx)
- EC directive 2014/68/EU (PED)

FEATURES AND BENEFITS

Maintenance free option eliminate any oil filling

Suitable for 100% H_2 for custody transfer and non-custody transfer applications

Used as reference meter in major calibration facilities

Conformity to EN12480, OIML R137 1&2, PED, ATEX and IECEx

Lowest measurement uncertainty, typically +/- 2 % for Q_{min} to Q_t x+/- 1 % for Qt to Q_{max}

Honeywell

RABO Meter Index And Pulse Options

S1 INDEX HEAD (STANDARD)

The rugged design of the meter index (including the plastic cover) has proven itself in the harshest environments and is IP67 certified. The S1 index head is equipped with an 8-digit mechanical index for continuous meter reading. For better usability the index head can be rotated by 350° without breaking any seals.

The low frequency outputs (reed contacts) can be connected to any Flow Computer or Electronic Volume Corrector. An additional switch is included to detect manipulation attempts from the outside.

S1-D Meter Index

S2 INDEX HEAD

The S2 index head provide same features and benefits as the S1 Index head. The S2 index head is designed for installations where a top reading of the measured flow rate is required.

MULTI-INDEX MI-2

The rugged, aluminum design of the meter index (including the metal cover) has proven itself in the harshest environments and is IP67 certified. The MI-2 is equipped with an 8-digit mechanical index for continuous meter reading.

ABSOLUTE ENCODER OPTION

Absolute ENCODER for digital data transfer between the meter and Flow Computer/EVC.

Index with EK205 (optional)

LOW FREQUENCY PULSERS IN-S1X AND PCM

Elster-Instromet rotary gas meters are fitted with 2 low-frequency (LF) pulsers E1 and a monitoring contact (PCM) for detection of interferences caused by external magnetic fields as standard. Pulser modules IN-S1x can be plugged on without opening the index and can be retrofitted or replaced at any time.

- Max. 2x LF outputs (type E1) with maximum frequency of 0.5 Hz
- 1x manipulation contact
- The standard IN-S10 pulse output is delivered with 2.5m open-ended 6- wire cable to be connected directly to an EVC or junction box. Optionally the IN-S11 and IN-S12 offer a 6-pin flange plug and one/two connector sockets.

RABO meters can be equipped with low and high frequency pulsers depending on customer requirements.

LOW FREQUENCY PULSERS IN-W1X AND PCM (OPTIONAL)

The Rabo gas meters can be optionally fitted with the LF Wiegand sensor module IN-W11 at the factory, instead of with the LF pulser module IN-S1x. The IN-W11 is a low-frequency pulse generator with a defined pulse width for maximum reliability with no mechanical wear.

HIGH FREQUENCY (OPTIONAL)

The Rabo gas meters can be optionally fitted with one HF sensor A1K at the factory. The A1K is an inductive high-frequency pulse generator with a signal output according to IEC 60947-5-6 (NAMUR)

Characteristic data for the switch version in accordance with DIN EN 60947-5 (Namur)	
Rated Voltage:	Un = 8 V DC
Internal Resistance	Ri = 1 kΩ
Current Consumption	active area free I >3 mA active area covered I ≤1 mA

RABO Meter Index And Pulse Options

IN-S10 (standard)

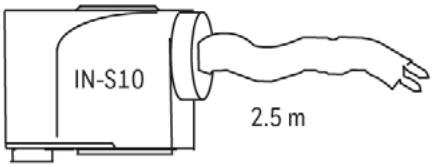

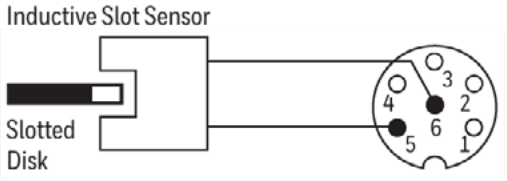

Pin Assignment of A1K 6-pin Plugs
to DIN 45322 (Binder Series 423)

IN-S11 (optional)

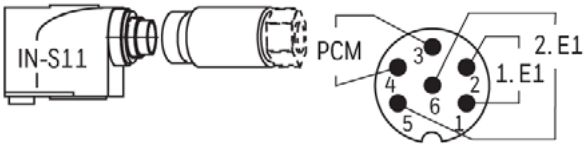

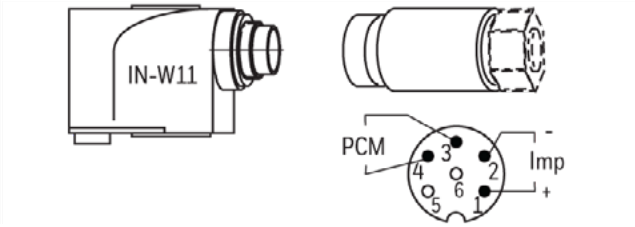

IN-S12 (optional)

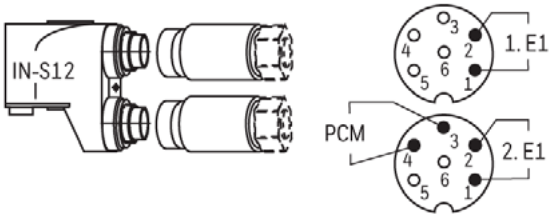

RABO Technical Specifications

TECHNICAL DATA	
Gas Temperature	-25°C to +70°C
Ambient Temperature	-25°C to +70°C
Storage Temperature	-40°C to +70°C
Operating Pressure	Max. 20 bar
Protection	IP 67 (suitable for outdoor installation)
Housing	Aluminium or spheroidal cast iron
MID Approval	DE-12-MI002-PTB001 (PTB) accordance EC directive 2014/32/EU
PED Approval	CE-0085CN0022 (DVGW Cert GmbH) accordance EC directive 2014/68/EU
ATEX / IEXEx Approval	Ex-Zone 1 in accordance EC directive 2014/34/EU (ATEX) and IECEx type-examination certificate: IECEx TUR 16.0042 X / Ex II 2G Ex h IIC T4 Gb
Medium	Natural gas and various filtered, non-corrosive gases and 100% H2
Metrological Accuracy Class	AC 1,0
Reproducibility	< 0.1%
Indexes	S1V (standard), S1 45° readout, S2 Optional: Absolute ENCODER S1D, double index S1D, double index MI-2D, MI-2 45° or 90° readout, S1-VR
Pulse Outputs	•LF pulser IN-Sx (reed contact, standard) in accordance with EC type-examination certificate TÜV 16 ATEX 7729 X and IECEx TUR 16.0032 X Ex II 2G Ex ia IIC T4 Gb •LF pulser IN-W11 (Wiegand sensor, optional) in accordance with EC type-examination certificate FTZÚ 04 ATEX 0277 / Ex II 2G Ex ia IIC T6/T4 Gb •HF pulser A1K (Namur sensor, optional) in accordance with EC type-examination certificate PTB 99 ATEX 2219X and IECEx PTB 11.0091 X Ex II 2G Ex ia IIC T4 Gb

ERROR LIMITS
Maximum permissible error limits in accordance with EN 12480
±1.0% for Qt* to Q_{max}
±2.0% for Q_{min} to Q_t

**Qt dependent on measuring range (example: 0.05 Q_{max} at >1:50)*

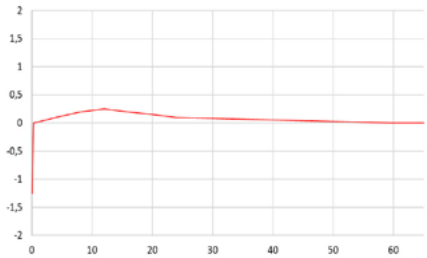

RABO METER - MAINTENANCE FREE VERSION

PERFORMANCE DATA RABO MAINTENANCE FREE (MEASURING RANGES, PRESSURE LOSS, PULSE VALUE)

DN (mm)	Type	Q_{max} (m^3/h)	Q_{min}*									V (dm^3)	NF (Imp/m^3)	HF (Imp/m^3)	Δp (air)** (mbar) at Q_{max}	Δp (natural gas)** (mbar) at Q_{max}
			1:200	1:160	1:130	1:100	1:80	1:65	1:50	1:30	1:20					
32	G16	25	-	-	-	-	-	-	-	0.8	1.25	0,87 (1,61*)	10 (1*)	11460 (6210*)	0.9	0.6
32	G25	40	-	-	-	-	-	0.65	0.8	1.3	2	0,87 (1,61*)	10 (1*)	11460 (6210*)	2.3	1.5
32	G40	65	-	-	-	0.65	0.8	1	1.3	2	3	0,87 (1,61*)	10 (1*)	11460 (6210*)	5.9	3.8
32	G65	100	-	0,65	0,8	1	1,3	1,6	2	3	5	0,87 (1,61*)	10 (1*)	11460 (6210*)	14.1	9.1
40	G16	25	-	-	-	-	-	-	-	0.8	1.25	0,87 (1,61*)	10 (1*)	11460 (6210*)	0.3	0.2
40	G25	40	-	-	-	-	-	0,65	0,8	1,3	2	0,87 (1,61*)	10 (1*)	11460 (6210*)	0.9	0.6
40	G40	65	-	-	-	0,65	0,8	1	1,3	2	3	0,87 (1,61*)	10 (1*)	11460 (6210*)	2,3 (2,1*)	1,5 (1,4*)
40	G65	100	-	0,65	0,8	1	1,3	1,6	2	3	5	0,87 (1,61*)	10 (1*)	11460 (6210*)	5,4 (4,8*)	3,5 (3,0*)
50	G16	25	-	-	-	-	-	-	-	0,8	1,25	0,87 (1,61*)	10 (1*)	11460 (6210*)	0,4 (0,2*)	0,3 (0,2*)
50	G25	40	-	-	-	-	-	0,65	0,8	1,3	2	0,87 (1,61*)	10 (1*)	11460 (6210*)	0,6 (0,4*)	0,4 (0,3*)
50	G40	65	-	-	-	0,65	0,8	1	1,3	2	3	0,87 (1,61*)	10 (1*)	11460 (6210*)	1,3 (1*)	0,8 (0,6*)
50	G65	100	-	0,65	0,8	1	1,3	1,6	2	3	5	0,87 (1,61*)	10 (1*)	11460 (6210*)	3,1 (2,3*)	2,0 (1,5*)
50	G100	160	-	1	1.3	1.6	2	2.5	3	5	8	1.61	1	6210	4.4	2.8
80	G100	160	-	1	1.3	1.6	2	2.5	3	5	8	1.61	1	6210	3.2	2

MF-Version is approved for temperature range gas from -10°C to +70°C only
** Values apply to RABO GGG EBL150 version (overall length: 150 mm)*** Qmin.-Values*
*** Typical values, depending on the test rig conditions*

RABO METER – OIL LUBRICATED VERSION

PERFORMANCE DATA RABO OIL LUBRICATED (MEASURING RANGES, PRESSURE LOSS, PULSE VALUE)

DN (mm)	Type	Q_{max} (m^3/h)	Q_{min}*									V (dm^3)	NF (Imp/m^3)	HF (Imp/m^3)	Δp (air)** (mbar) at Q_{max}	Δp (natural gas)** (mbar) at Q_{max}
			1:200	1:160	1:130	1:100	1:80	1:65	1:50	1:30	1:20					
32	G16	25	-	-	-	0.25	0.32	0.4	0.5	0.8	1.25	0,87 (1,61*)	10 (1*)	11460 (6210*)	0.9	0.6
32	G25	40	-	0.25	0.32	0.4	0.5	0.65	0.8	1.3	2	0,87 (1,61*)	10 (1*)	11460 (6210*)	2.3	1.5
32	G40	65	-	-	0.5	0.65	0.8	1	1.3	2	3	0,87 (1,61*)	10 (1*)	11460 (6210*)	5.9	3.8
32	G65	100	0.5	0,65	0,8	1	1,3	1,6	2	3	5	0,87 (1,61*)	10 (1*)	11460 (6210*)	14.1	9.1
40	G16***	25	-	-	-	0.25	0.32	0.4	0.5	0.8	1.25	0,87 (1,61*)	10 (1*)	11460 (6210*)	0.3	0.2
40	G25***	40	-	0.25	0.32	0.4	0.5	0.65	0.8	1.3	2	0,87 (1,61*)	10 (1*)	11460 (6210*)	0.9	0.6
40	G40	65	-	-	0.5	0.65	0.8	1	1.3	2	3	0,87 (1,61*)	10 (1*)	11460 (6210*)	2,3 (2,1*)	1,5 (1,4*)
40	G65	100	0.5	0.65	0.8	1	1.3	1.6	2	3	5	0,87 (1,61*)	10 (1*)	11460 (6210*)	5,4 (4,8*)	3,5 (3,0*)
50	G16***	25	-	-	-	0.25	0.32	0.4	0.5	0.8	1.25	0,87 (1,61*)	10 (1*)	11460 (6210*)	0,4 (0,2*)	0,3 (0,2*)
50	G25***	40	-	0.25	0.32	0.4	0.5	0.65	0.8	1.3	2	0,87 (1,61*)	10 (1*)	11460 (6210*)	0,6 (0,4*)	0,4 (0,3*)
50	G40	65	-	-	0.5	0.65	0.8	1	1.3	2	3	0,87 (1,61*)	10 (1*)	11460 (6210*)	1,3 (1*)	0,8 (0,6*)
50	G65	100	0.5	0.65	0.8	1	1.3	1.6	2	3	5	0,87 (1,61*)	10 (1*)	11460 (6210*)	3,1 (2,3*)	2,0 (1,5*)
50	G100	160	0.8	1	1.3	1.6	2	2.5	3	5	8	1.61	1	6210	4.4	2.8
80	G100	160	0.8	1	1.3	1.6	2	2.5	3	5	8	1.61	1	6210	3.2	2
80	G160	250	1.3	1.6	2	2.5	3	4	5	8	12.5	2.99	1	3276	2.2	1.4
80	G250	400	2	2.5	3	4	5	6	8	13	20	3.7	1	2653	4.7	3
100	G160	250	1.3	1.6	2	2.5	3	4	5	8	12.5	2.99	1	3276	2	1.3
100	G250	400	2	2.5	3	4	5	6	8	13	20	3.7	1	2653	5.2	3.4
100	G400	650	3.3	4	5	6.5	8	10	13	22	32	4.5	1	2195	13.2	8.5
150	G400	650	3.3	4	5	6.5	8	10	13	22	32	4.5	1	2195	11.2	7.2

** Values in brackets apply to RABO GGG EBL150 version (overall length: 150 mm)*
*** Typical values, depending on the test rig conditions*
**** Qmin.-Values 0,25m³/h, 0,32m³/h and 0,4m³/h not apply for GGG EBL150*

DIMENSIONS, WEIGHTS AND CONNECTIONS

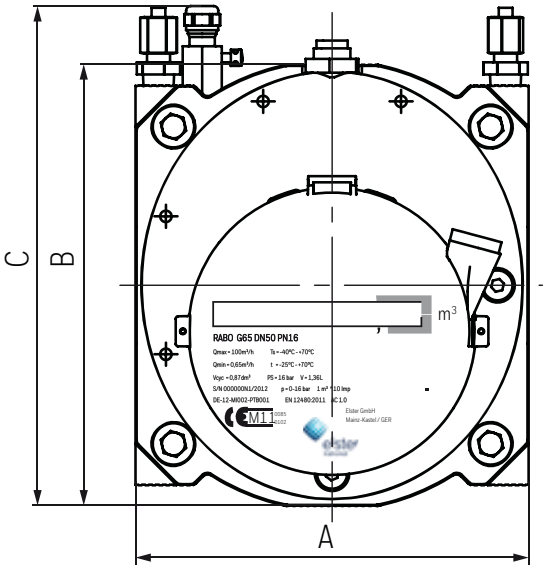

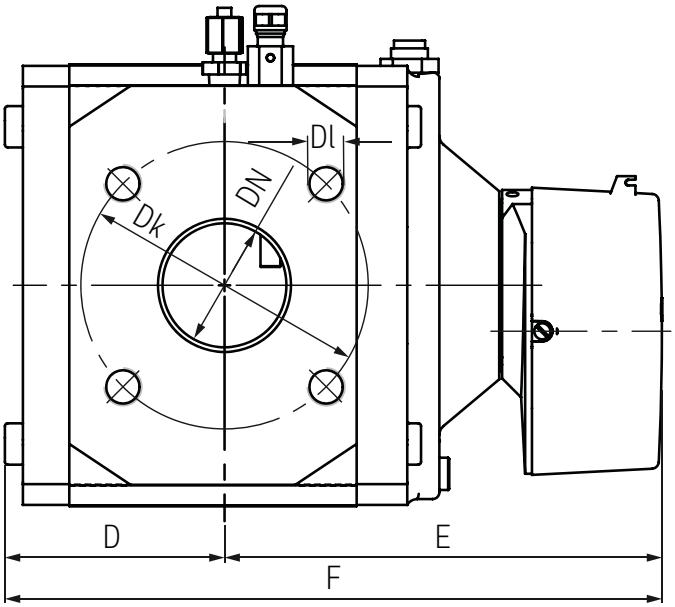

ALUMINIUM: DIMENSIONS AND WEIGHTS

Size	Dimensions (mm)						Weight (Kg)
	A	B	C*	D	E	F	
G16-G65	171	192	216	96	191	286	11
G100	171	192	216	138	233	371	15
G160	241	256	280	131	271	402	30
G250	241	256	280	156	296	451	34
G400 DN100	241	256	280	190	320	510	41
G400 DN150	241	280	315	190	320	510	40

SPHEROIDAL CAST IRON: DIMENSIONS AND WEIGHTS

Size	Dimensions (mm)						Weight (Kg)
	A	B	C*	D	E	F	
G16-G65 (EBL 150**)	150	209	233	138	233	371	36
G16-G65 (EBL 171**)	171	209	233	138	233	371	37
G100	171	209	233	138	233	371	37
G160	241	266	290	131	271	402	67
G250	241	266	290	156	296	451	75

CONNECTIONS

DN	Pressure Rating	D_k	D_l
32	PN 16/Class 150	100/88.90	4 x M16/4 x M12
40	PN 16/Class 150	110/98.60	4 x M16/4 x M12
50	PN 16/Class 150	125/120.70	4 x M16/4 x M16
80	PN 16/Class 150	160/152.40	8 x M16/4 x M16
100	PN 16/Class 150	180/190.50	8 x M16/8 x M16
150	PN 16/Class 150	240/241	8 x M20/8 x M20

* *When connecting thermowells, pressure taps or the high-frequency pulser and when mounting a volume conversion device, height C changes accordingly (e.g. RABO with fitted EK280 = B + 270 mm)*

** *EBL = Installation length*

Meter Configuration

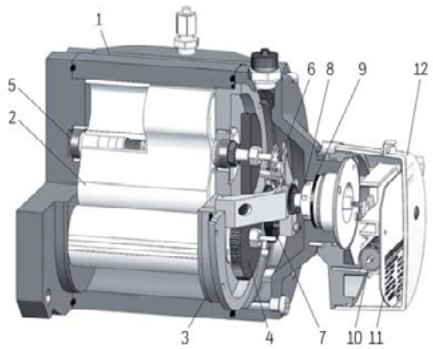

1 Housing
2 Impeller
3 Bearing Cover
4 Synchronizing Gears
5 Permanently Lubricated Ball Bearings
6 HF Pulser A1K (option)
7 Gear
8 Magnetic Coupler
9 Partition
10 Index
11 Main Plate
12 Index Cover

For more information
To learn more about Honeywell Elster's Gas Solutions, visit www.honeywellprocess.com or contact your Honeywell account manager.

Honeywell Process Measurement and Control

United States
2101 CityWest Blvd,
Houston, TX 77042

Germany
Elster GmbH
Steinern Str. 19 - 21
55252 Mainz-Kastel
T +49 6134 605 0
F +49 6134 605 223

www.elster-instromet.com
customerfirst@honeywell.com

Elster® is a registered trademark of Elster GmbH

5083150 | IA-PMC-GAS-RABO-DTS_US | 7/25
© 2025 Honeywell International Inc.