Dryer Systems

Activated Carbon Adsorber

Ultrasorp AKC 0005 - 8750

MAIN FEATURES & BENEFITS

- Activated carbon adsorber for the removal of oil vapors and hydrocarbons, including built-in oil indicator
- High operating safety, since the exact residual oil content can be determined at any time
- Generous sizing of vessel diameter, low flow velocities, this leads to low abrasion of the activated carbon and to a low differential pressure

AKC 0005 - 8750

INDUSTRIES

- PCB assembly and CD manufacturing

- Paint and finish industry

- Machine building industry and plant engineering / construction

Donaldson Filtration Deutschland GmbH
Büssingstr. 1
D-42781 Haan
Tel.: +49 (0) 2129 569 0
Fax: +49 (0) 2129 569 100
E-Mail: CAP-de@donaldson.com
Web: www.donaldson.com

Donaldson® Ultrafilter

F119013_06_2018_ENG

Technical alterations reserved (6/2018)

PRODUCT DESCRIPTION

Prefiltered, clean and dried compressed air (required inlet conditions) is led via the inlet (1) into the vessel and is lead through the gas diffuser to the adsorption vessel inlet (2) and through the activated carbon bed (3) from top to bottom.

In the activated carbon bed, the compressed air is cleaned from oil vapours and hydrocarbons.
The cleaned air is lead via the lower gas diffuser (4) and the oulet of the adsorption vessel (5) to the compressed air network and to the point of use.

By means of an oil indicator (6) at the outlet of the adsorber , the saturation of the carbon can be measured online, at any time.

Typical applications for the activated carbon adsorbers are:

- **Laser machines**
  Treatment of cutting gas or purge gas
- **Breathing air**
  Removal of oil and flavor substances
- **Point of use applications**
  Production of oil free compressed air for various point of use applications e.g. packaging machine

Main Components

- Unit inlet (**1**)
- Adsorption vessel inlet (**2**)
- Activated carbon bed (**3**)
- Gas diffuser (**4**)
- Adsorption vessel outlet (**5**)
- Oil indicator (**6**)

PRODUCT SPECIFICATIONS

Features:	Benefits:
Largely dimensioned amount of activated carbon:	High retention rates and long lifetime of activated carbon (residual oil content of ≤ 0,003 mg/m³ and a lifetime of > 10000 operating hours
Largely sized vessel diameters	Low flow speed, therefore no risk of abrasion of activated carbon and low differential pressure
Activated carbon adsorber with residual oil indicator standard	High operating safety, since residual oil content can be measured on-line at any time

Technical Data:	
Operating pressure types 0005 - 1000:	min. 4 bar (g) / max. 16 bar (g)
Operating pressure types 1350 - 8750:	min. 4 bar (g) / max. 10 bar (g)
Ambient temperature:	min. +4°C / max. +50°C
Medium temperature:	min. +4°C / max. +50°C
Medium:	Compressed air / Nitrogen
Residual oil indicator:	Accuracy: < 0,01 ppm
Lifetime of activated carbon:	> 10000 operating hours
Residual oil content * :	≤ 0,003 mg/m³
Required inlet conditions:	Compressed air pre-dried to - 40 °C at 0.03 mg/m³ residual oil content at inlet of adsorber
Recommendation:	
Upstream installation of microfilter, type M and an adsorption dryer	
Declaration of conformity:	
Types 0005 – 2750:	acc. to PED 2014/68/EU
Types 3500 – 8750:	acc. to PED 2014/68/EU
Pressure vessel – design, manufacture, testing, types 0005 - 2750:	
Adsorber:	acc. to Directive 2014/29/EU
Pipings:	acc. to PED 2014/68/EU
Pressure vessel – design, manufacture, testing, types 3500 - 8750:	
Adsorber:	acc. to PED 2014/68/EU
Pipings:	acc. to PED 2014/68/EU

* Residual oil content at adsorber outlet and lifetime of activated carbon at operating pressure of 7 bar (g), 35 °C inlet temperature, air dryness of –40 °C pressure dewpoint and max. residual oil content of < 0.03 mg/m³ at adsorber inlet.

PRODUCT SPECIFICATIONS

AKC	Nominal flow inlet m³/h (1 bar, 20°C)*	Pressure drop new mbar	AKC	Nominal flow inlet m³/h (1 bar, 20°C)*	Pressure drop new mbar
0005	5	10	**1350**	1350	60
0010	10	10	**1650**	1650	55
0015	15	15	**1950**	1950	40
0025	25	15	**2250**	2250	50
0035	35	25	**2750**	2750	60
0050	50	15	**3500**	3500	70
0080	80	50	**4000**	4000	45
0100	100	50	**5000**	5000	50
0150	150	50	**6000**	6000	60
0175	175	40	**7000**	7000	65
0225	225	40	**8750**	8750	45
0300	300	40			
0375	375	60			
0550	550	60			
0650	650	70			
0850	850	90			
1000	1000	60			

* related to 1 bar (abs) and 20 °C at intake of compressor and 7 bar (g) and 35 °C inlet temperature

SIZING

Operating pressure bar (g)	4	5	6	7	8	9	10	11	12	13	14	15	16
Correction factor overpressure (fp)	0,62	0,75	0,88	1,0	1,12	1,25	1,38	1,50	1,62	1,75	1,88	2,0	2,13

Entrance temperature °C	20	25	30	35	40	45	50
Correction value temperature (f_T)	1,0	1,0	1,0	1,0	0,9	0,8	0,5

Example:

$\dot{V}_{nom}$ = 200 m³/h, inlet temperature = 30°C, operating pressure = 10 bar (g),

$$\dot{V}_{korr} = \frac{\dot{V}_{nom}}{f} = \frac{200\ m^3/h}{1{,}38 * 1{,}0} = 144{,}93\ m^3/h$$

Calculated adsorber size:
AKC, type 0150

DIMENSIONS

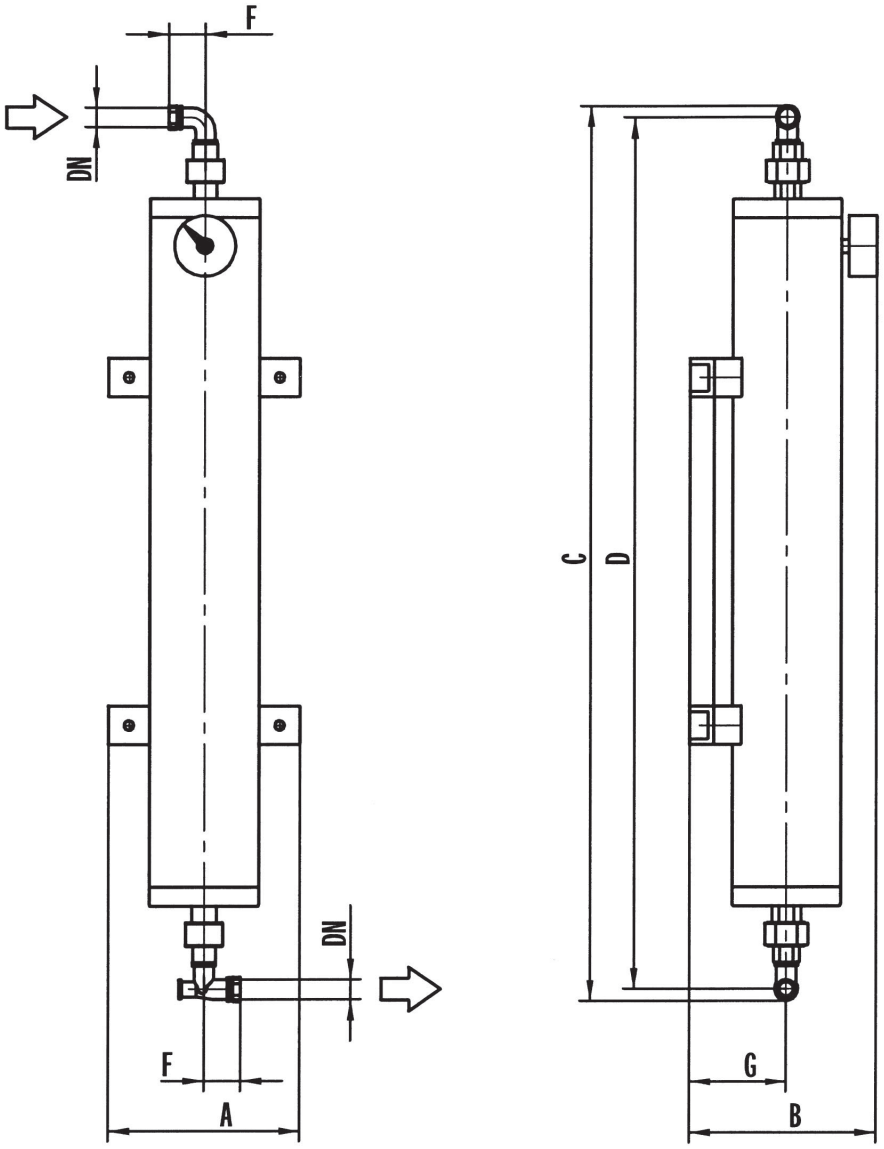

Type	DN “	A mm	B mm	C mm	D mm	F mm	Weight kg
0005	G 3/8	150	160	485	460	38	5
0010	G 3/8	150	175	590	565	38	7
0015	G 3/8	150	175	820	795	38	9
0025	G 1/2	200	200	780	755	28	10
0035	G 1/2	200	200	940	915	28	12

DIMENSIONS

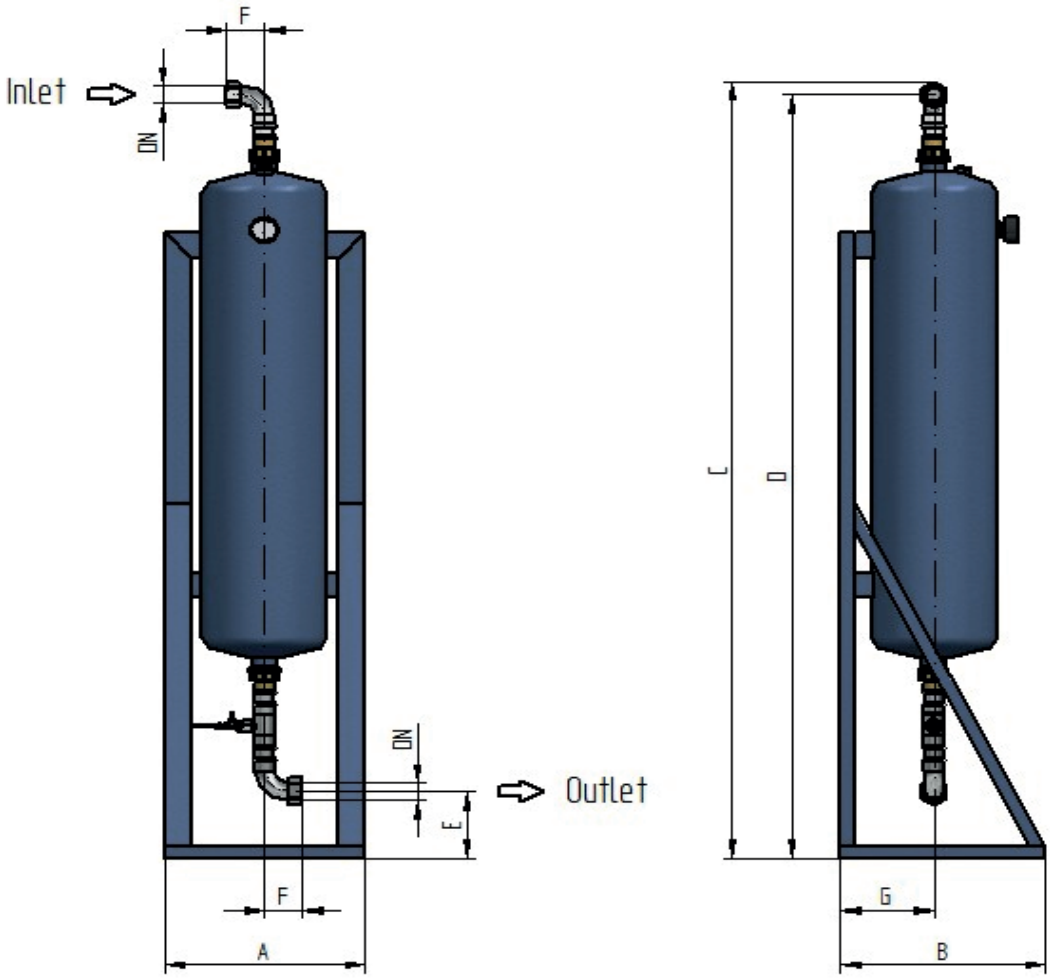

Type	DN "	A mm	B mm	C mm	D mm	E mm	F mm	Weight kg
0050	3/4	290	350	1300	1325	150	100	24
0080	3/4	290	350	1640	1660	160	100	29
0100	1	320	350	1600	1620	155	65	36
0150	1	320	350	2010	2030	155	65	41
0175	1	380	450	1855	1890	150	100	66
0225	1 1/2	380	450	1855	1890	150	85	70
0300	1 1/2	440	450	1840	1880	160	85	82
0375	1 1/2	440	450	2170	2205	150	85	95
0550	2	550	600	2100	2140	150	105	161
0650	2	550	600	2130	2165	125	105	180
0850	2	600	600	2230	2265	140	105	190
1000	2	660	600	2260	2300	150	105	201

DIMENSIONS

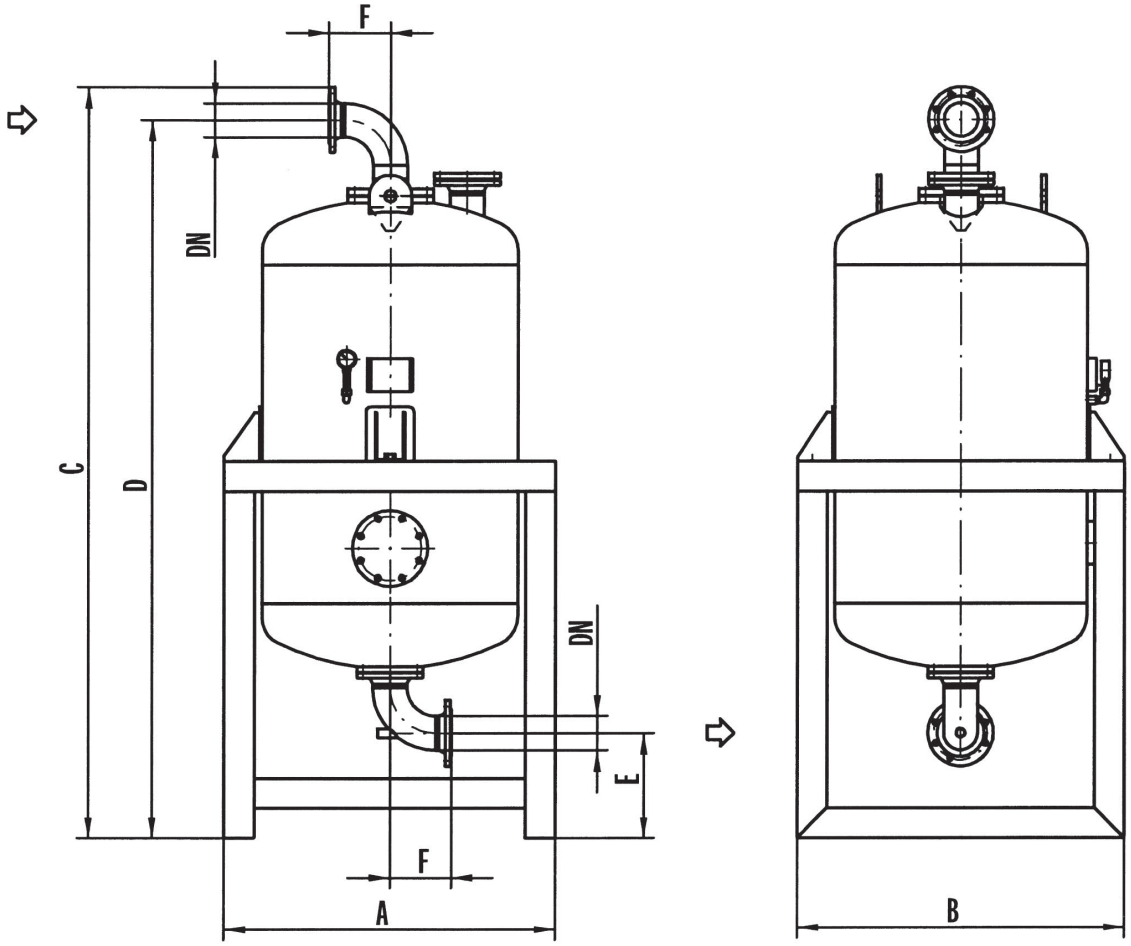

Type	DN mm	A mm	B mm	C mm	D mm	E mm	F mm	Weight kg
1350	80	700	700	2550	2450	373	165	331
1650	80	800	800	2360	2260	353	38	395
1950	100	850	850	2580	2370	453	38	459
2250	100	950	950	2600	2490	453	38	585
2750	100	1000	1000	2690	2580	453	62	680
3500	100	1150	1150	2695	2585	435	50	975
4000	150	1200	1200	2989	2846	485	50	1105
5000	150	1300	1300	3040	2897	475	50	1320
6000	150	1400	1400	3080	2937	485	58	1625
7000	150	1500	1500	3095	2952	485	58	1975
8750	200	1700	1700	3318	3148	530	58	2750