Industrial Gases

Ultrapac HL - MSD/ALD 0100 -1000 Heatless Adsorption Dryer

PRODUCT DESCRIPTION

The Ultrapac HL - MSD/ALD dryer range is designed for drying of compressed air and nitrogen in a pressure range in applications up to 16 bar. The drying process is based on adsorption of water molecules out of a gas stream using hygroscopic desiccant materials. With this drying concept pressure dewpoints of -40°C (at 7 bar) or lower can be achieved.

The regeneration of saturated desiccant is done by using a partial steam of dry compressed air for the desorption of water. Prefilter with automatic electronic condensate drain and afterfilter are included in the Ultrapac purification system.

An electronic circuit board controller enables automated control of all phases of the drying and regeneration cycle. It includes the Ultraconomy dewpoint monitoring and control system to help support energy efficient and reliable operation in the Superplus models.

MAIN FEATURES & BENEFITS

- **Heatless-regenerated adsorption dryer**

Robust and efficient design for achieving low pressure dewpoints in even challenging high ambient temperature and humidity conditions.

- **Pre- and afterfilters with UltraPleat™ media technology**

Complete purification system including high-efficiency filters for removal of oil and water aerosols as well as solid particles.

- **Superplus models with Ultraconomy dewpoint control**

Monitoring and control of dewpoint suport full utilization of desiccant capacity and trigger the regeneration process. This allows energy and cost saving as well as full drying performance control.

- **Automatic electronic zero-loss condensate drain with alarm function**

Eliminates the loss of compressed air during drain process. Allows continuous control of drain function for reliable operation.

- **Robust and reliable design and components**

Pressure vessels and pipe system are made of steel. Piping system utilizes press-fit design. The unit incorporates robust, long-life shuttle valves and solenoid membrane valves for enhanced reliability and ease of maintenance.

INDUSTRIES

- Industrial Machinery

- Food Processing

- Electronics

- Automotive

Technical alterations reserved (05/2026)

F119252_ENG_2026_05_REV05

PRODUCT DESCRIPTION

The HL - MDS/ALD dryer consists of two adsorber vessels (AD1 / AD2) filled with desiccant. While one adsorber is in drying phase, the other adsorber is being regenerated.

In the drying phase compressed air is entering the unit at the wet air inlet (J) and passes the coalescing type prefilter F1 where oil and water aerosols are removed. Condensate is collected in the condensate drain C1 and automatically drained off the system. The wet air is led through the lower shuttle valve (SV1) into the adsorber AD1 (see example). It flows though the adsorber from bottom to top and adsorbs the humidity on the desiccant. Via the upper shuttle valve (SV2) it flows to the dry air outlet (O). The dewpoint is measured by the dewpoint transmitter MT1 (for Superplus models).

While adsorber AD1 is in drying phase, adsorber AD2 is being regenerated. Therefore the pressure in adsorber AD2 is released via valve V2 (V1) and immediately a partial flow of dry air is expanded through the orifice OF1 and flows from top to bottom through adsorber AD1. The dry regeneration air is picking up the water from the desiccant and is released via the silencer S2 (S1) to the regeneration outlet Ro.

At the end of the regeneration phase valve V2 (V1) is closed and through the orifice OF1 pressure is building up in adsorber AD2 again until it is on the same pressure level as in adsorber AD1.

The switch-over for the adsorbers AD1 and AD2 from drying to regeneration or vice versa is triggered either in time-controlled mode (standard models) or by controlling the dewpoint on transmitter MT1 when the dewpoint limit value is exceeded (Superplus models).

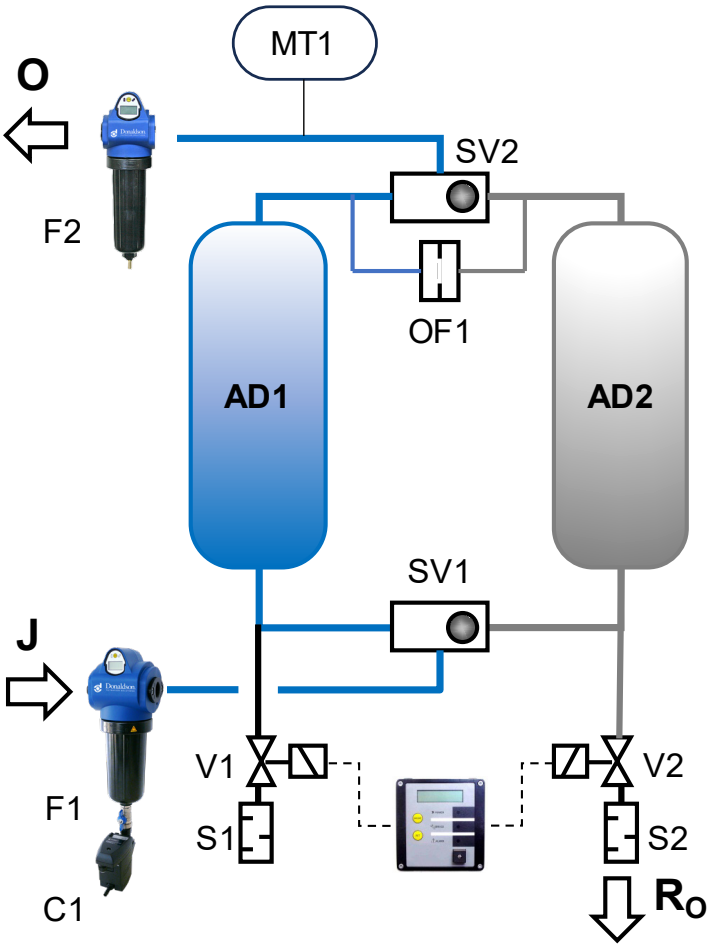

J = Wet air inlet
O = Dry air outlet
Ro = Regeneration air outlet

PRODUCT DESCRIPTION

FEATURES	BENEFITS
Heatless-regenerated adsorption dryer with purge regeneration concept	Robust and efficient drying design for achieving low pressure dew-points in even high ambient temperature and humidity conditions.
2 selectable model types ALD and MSD	ALD for moderate operating temperatures and pressure dewpoint -40°C (Class 2 acc. to ISO 8573-1:2010); MSD for high temperature applications and pressure dewpoints down to -70°C (Class 1 acc. to ISO8573-1:2010 are achievable at appropriate sizing and operating conditions).
Pre- and afterfilter with UltraPleat™ media technology included	Complete purification package with high oil- and water aerosol retention efficiency on prefilter and high particulate retention efficiency on afterfilter at very low differential pressure included.
Prefilter with electronical zero-loss level-controlled condensate drain incl. function control and alarm message	Zero compressed air loss through condensate drain. Continuous control of drain function for reliable operation.
Ultraconomy dewpoint control (Superplus models)	Monitoring and control of dewpoint support full utilization of desiccant capacity for energy and cost saving opportunites as well as full drying performance control.
Electrical controller including visualization of dryer status, alarm and service messages. Standard version with time-controlled operating mode. Superplus version with text display and dewpoint monitoring including Ultraconomy capacity control mode.	Reliable control of dryer operation and continuous monitoring of dryer status for energy efficient and reliable operation.
Remote On/Off contact (intermittent operation)	Remote control of dryer operation and link to compressor on/off-load contact possible to save purge air when compressor is not running.
10 dryer sizes up to 1000 m^3/h nominal flow capacity	Wide range of dryer flow capacities and connection sizes matching to user requirements.
Welded steel vessels and frame, press-fitting pipeline design	Robust, long-life, and service-friendly design
Shuttle valves and regeneration valves with flanged housings	Quick replacement of wear parts may reduce service and maintenance cost and lead to reduced downtime.
Econometer differential pressure indicators on pre- and afterfilters	Monitoring of filter particle contamination and enabling of on time replacement of contaminated filter elements.

Donaldson. FILTRATION SOLUTIONS

PRODUCT DESCRIPTION

In addition to the features already included in the standard dryer configuration a range of defined standard options are available.

OPTIONS	DESCRIPTION AND BENEFITS
Power supply voltages	230 V AC (50-60 Hz) power supply available as standard; 24 VDC, 115VAC (50-60 Hz) as option
Packaging options	Seaworthy packaging and vertical or horizontal wooden box packaging options available for special transport / storage conditions.
Purge orifice for specific operating pressure	Selection of specific orifice for dryer model, size and pressure
4...20 mA output signal	Dewpoint signal can be transferred to on-site control or monitoring system (available for Superplus models).
Tropical version	Operation in short cycle mode allows selection of appropriate dryer model for operation at high inlet temperatures up to 50°C.
-70°C pressure dewpoint measuring system	Dewpoint measuring system in stainless steel material to support precise and reliable measuring of extreme low dewpoints.
Further options on request	Individual dryer configuration as per customer's requirements and custom-made solutions, also for other industrial gases available on request.

Donaldson. FILTRATION SOLUTIONS

PRODUCT DESCRIPTION

TECHNICAL DATA	
Adsorber Vessel	
Pressure Vessel Material	Carbon steel
Design Data	Design pressure: 16 bar g Design temperature: -10°C / +60°C
Design, Manufacturing and Testing	Acc. to AD2000 / PED 2014/29/EU
Flow Distributor Material	Stainless steel
Piping	
Design Data	Flange pressure rating: PN16 Design pressure: 16 bar g Design temperature: 60°C
Piping Material	Carbon steel, galvanized
Design, Manufacturing and Testing	Acc. to PED 2014/68/EU
Filters	
Design Data	Design pressure: 16 bar g Design temperature: 65°C
Filter Housing Material	Aluminium
Design, Manufacturing and Testing	Acc. to PED 2014/68/EU
Electrical Controller	
Design	Circuit board controller with LED indicators (Standard) or LCD text display (Superplus)
Power Supply	230 V AC 50-60 Hz (Standard), 24 V DC (optional), 115 V AC 50-60Hz (optional)
Protection Class	IP 54, acc. to IEC/EN 60529
Potential-Free Alarm Contact	Included
Remote On/Off Contact	Included

Donaldson. FILTRATION SOLUTIONS

PRODUCT DESCRIPTION

TECHNICAL DATA	
Nominal Standard Conditions	
Pressure Dewpoint	ALD: -40°C (at 7 bar g), MSD-70°C…-40°C (depending on sizing and operating conditions)
Operating Inlet Pressure	7 bar g
Operating Inlet Temperature	35°C
Inlet Humidity	100% saturated
Compressed Air Purity	
Compressed Air Purity Classes acc. to ISO 8573-1:2010	ALD: 1-2 : 2 : 2 MSD: 1-2 : 1-2 : 2
Operating Limits	
Media	Compressed Air / Nitrogen
Operating Pressure	4 – 16 bar g
Operating Temperature	5 – 50°C
Ambient Temperature	5 – 50°C
Installation	Indoor

Donaldson. FILTRATION SOLUTIONS

PRODUCT DESCRIPTION

Technical Data							
HL-ALD HL-MSD	Nominal Volume Flow (1 bar, 20°C) m^3/h[1]	Purge Air Consumption, average m^3/h (1 bar, 20°C)		Volume Flow Outlet, min. m^3/h (1 bar, 20°C)		Differential Pressure, initial mbar	Pre- and afterfilter S with UltraPleat™ media technology
		ALD	MSD	ALD	MSD		
0100	100	15.0	20	81.6	75.4	90	0210
0150	150	23.0	30	121.7	113.1	210	0210
0175	175	26.3	35	142.7	132.0	210	0210
0225	225	34.0	45	183.2	170.0	115	0450
0300	300	45.0	60	244.7	226.2	155	0450
0375	375	56.0	75	306.1	282.8	240	0450
0550	550	83.0	110	447.9	414.7	195	0600
0650	650	98.0	130	529.5	490.1	255	0750
0850	850	128.0	170	692.6	640.9	265	1100
1000	1000	150.0	200	815.5	754.0	330	1100

[1] Nominal flow at 7 bar g, 35°C; [2] at nominal flow

SIZING

Type	Pressure Dewpoint (PDP)	Residual water content	Inlet Temp.	Operating Pressure (bar g)												
				4	5	6	7	8	9	10	11	12	13	14	15	16
ALD	-40°C	0.11 g/m³	25°C	0.75	0.90	1.05	1.20	1.35	1.50	1.65	1.80	1.95	2.10	2.25	2.40	2.55
			30°C	0.69	0.83	0.96	1.10	1.24	1.38	1.51	1.65	1.79	1.93	2.06	2.20	2.34
			35°C	0.63	0.75	0.88	1.00	1.13	1.25	1.38	1.50	1.63	1.75	1.88	2.00	2.13
MSD	≤ -40°C PDP ≥ -70°C*	0.11 g/m³ 0.0027 g/m³	25°C	0.75	0.90	1.05	1.20	1.35	1.50	1.65	1.80	1.95	2.10	2.25	2.40	2.55
			30°C	0.69	0.83	0.96	1.10	1.24	1.38	1.51	1.65	1.79	1.93	2.06	2.20	2.34
			35°C	0.63	0.75	0.88	1.00	1.13	1.25	1.38	1.50	1.63	1.75	1.88	2.00	2.13
			40°C	0.50	0.60	0.70	0.80	0.90	1.00	1.10	1.20	1.30	1.40	1.50	1.60	1.70
			45°C	0.44	0.53	0.61	0.70	0.79	0.88	0.96	1.05	1.14	1.23	1.31	1.40	1.49
			50°C	0.31	0.38	0.44	0.50	0.56	0.63	0.69	0.75	0.81	0.88	0.94	1.00	1.06
* on request				Correction factors (f)												

Example:

V_{nom} = 200 m³/h, inlet temperature = 30°C, operating pressure = 10 bar (g), PDP = -40°C

$$Vcorr = \frac{Vnom}{f} = \frac{200\ m^3/n}{1.51} = 132.5\ m^3/h$$

Calculated dryer size:
ALD, Type 0150

Donaldson. FILTRATION SOLUTIONS

DIMENSIONS / WEIGHT

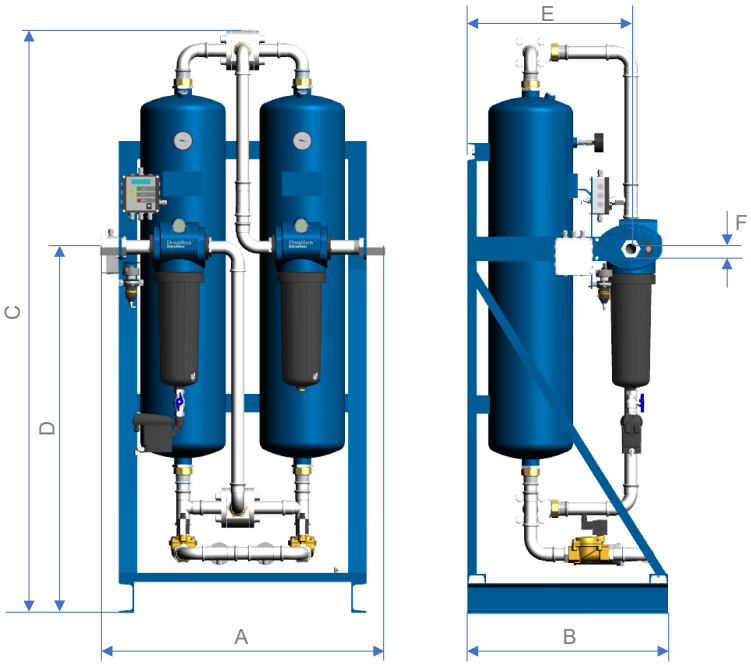

HL-ALD HL-MSD	A mm	B mm	C mm	D mm	E mm	F BSP	Weight kg
0100	705	450	1600	900	370	1"	155
0150	705	450	2025	1100	370	1"	185
0175	910	650	1900	1185	530	1"	245
0225	920	650	1900	1185	530	1 ½"	245
0300	920	650	1890	1185	530	1 ½"	290
0375	920	650	2220	1300	520	1 ½"	370
0550	1190	750	2220	1370	635	2"	400
0650	1190	750	2220	1370	635	2"	475
0850	1320	850	2320	1500	730	2"	565
1000	1320	850	2340	1500	730	2"	646

For more information please contact your Donaldson Sales Representative and visit our website at **www.donaldson.com**.

Donaldson
FILTRATION SOLUTIONS

Explore our solutions
at shop.donaldson.com

Contact us

Donaldson Europe BV
Research Park No. 1303, Interleuvenlaan, 1
B-3001 Leuven, Belgium
Telephone: +32 (0) 16 38 38 11

Technical Data Sheet No. F119252 ENG (04/25) Ultrapac HL MSD/ALD Heatless Adsorption Dryer.
©2025 Donaldson Company, Inc. Donaldson, UltraPleat and the color blue are marks of Donaldson Company, Inc.
All other marks belong to their respective owners. All rights reserved.

Important Notice: Many factors beyond the control of Donaldson can affect the use and performance of Donaldson products in a particular application, including the conditions under which the product is used. Since these factors are uniquely within the user's knowledge and control, it is essential the user evaluate the products to determine whether the product is fit for the particular purpose and suitable for the user's application. All products, product specifications, availability and data are subject to change without notice, and may vary by region or country.