Industrial Gases

Ultradryer HRS-L+ 1000 - 8750 Heat-Regenerated Adsorption Dryer

PRODUCT DESCRIPTION

The Ultradryer HRS-L+ range is designed for drying of compressed air and nitrogen in a pressure range up to 10 bar.

The drying process is based on adsorption of water molecules out of a gas stream on hygroscopic desiccant materials. With this drying concept pressure dewpoints of -70°C (at 7 bar) or lower can be achieved.

The regeneration of saturated desiccant is done by using ambient air for the desorption of water and cooling the hot desiccant with ambient air in a closed-loop system.

The pressure vessels and all main process pipelines are made of steel material with flange connections.

An electrical control system with SIEMENS S7-1215C PLC and touch display SIEMENS KTP700 enables automated control of all phases of the drying and regeneration cycle. It includes the dewpoint monitoring and control system Ultraconomy for energy efficient and reliable operation.

MAIN FEATURES & BENEFITS

- **Heat-regenerated adsorption dryer with ambient air regeneration and closed-loop cooling concept**

Utilization of compression heat during heating process and closed-loop cooling lead to energy-efficient desiccant regeneration at even high ambient temperature and high ambient humidity conditions.

- **Ultraconomy dewpoint control included**

Monitoring and control of dewpoint ensure full utilization of desiccant capacity and is the trigger to start the regeneration process. High energy and cost saving opportunity as well as full drying performance control.

- **Reliable and stable dewpoint performance even under challenging conditions**

Closed-loop cooling concept as well as applied cycle-times (6 hours cycle) and special desiccant layer concept provide high operation safety and reliable achievement of <-70°C dewpoints even at challenging operating conditions.

- **Condition Monitoring and Data Transfer**

Several individual condition messages, signal inputs/outputs and alarm contacts available as standard. Controller is ready for upgrades with further monitoring and data transfer standard options.

INDUSTRIES

- Industrial Machinery

- Food Processing

- Electronics

- Automotive

Technical alterations reserved (11/2025)

F119012_EN_2025_11_REV01

PRODUCT DESCRIPTION

The adsorption dryer is consisting of two adsorber vessels (AD1 / AD2) filled with desiccant. While one adsorber is in drying phase, the other adsorber is being regenerated.

In the drying phase compressed air is entering the unit at the wet air inlet (J) and is led through the butterfly valve K1 (K2) into the adsorber AD1 (example shown here). It flows through the adsorber from bottom to top and adsorbs the humidity on the desiccant. Via a non-return valve R1 (R2) it flows to the dry air outlet (O). The dewpoint is measured by the dewpoint transmitter MT101. While adsorber AD1 is in drying phase, adsorber AD2 is being regenerated. Therefore, the pressure in adsorber AD2 is released via valve V4 (V3) and ambient air is sucked-in via a blower (G1) with suction filter AF and is heated by an electrical heater (E1). The desorption temperature is controlled by a temperature transmitter TT101. Butterfly valve K7 is opened and butterfly valves K6 and K8 are closed. Via butterfly valve K10 (K9) the heated air is flowing from top to bottom through the adsorber AD2 and is picking-up the water molecules which are adsorbed on the desiccant. The heated air is flowing through the butterfly valves K4 (K3) and K5 to the regeneration air outlet (Ro). The heating phase is finished when the setpoint on temperature transmitter TT102 is reached.

During the cooling phase butterfly valve K7 is closed and butterfly valves K6 and K8 are opened. Also cooling water valve V7 is opened. The cooling air is now flowing from bottom to top through adsorber AD2 (AD1). Through butterfly valves K10 (K9) and K8 the hot cooling air (Co) is entering the air cooler W1, is cooled down and is entering the blower (G1) again. Cooling phase is finished when the setpoint on temperature transmitter TT102 is reached. At the end of the regeneration cycle the pressure in adsorber AD2 is built-up again in adsorber AD2 (AD1) by closing butterfly valves K4 (K3), K6, K8, K10 (K9) and opening valve V2 (V1).

The switch-over for the adsorbers AD1 and AD2 from drying to regeneration or vice versa is triggered by controlling the dewpoint on transmitter MT101, when the dewpoint limit value is exceeded.

Drying + Heating Phases

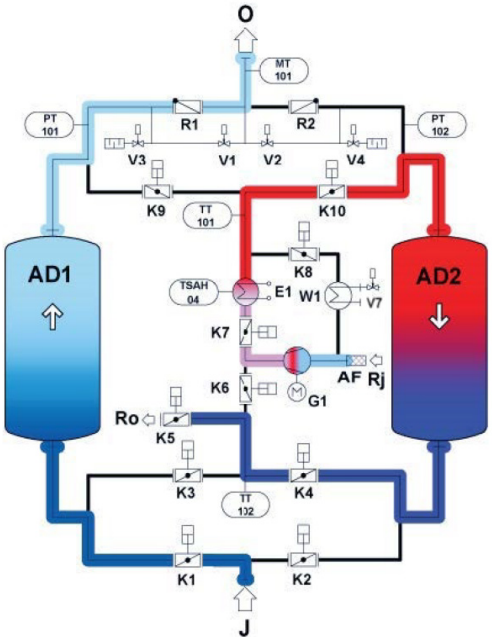

Drying + Cooling Phases

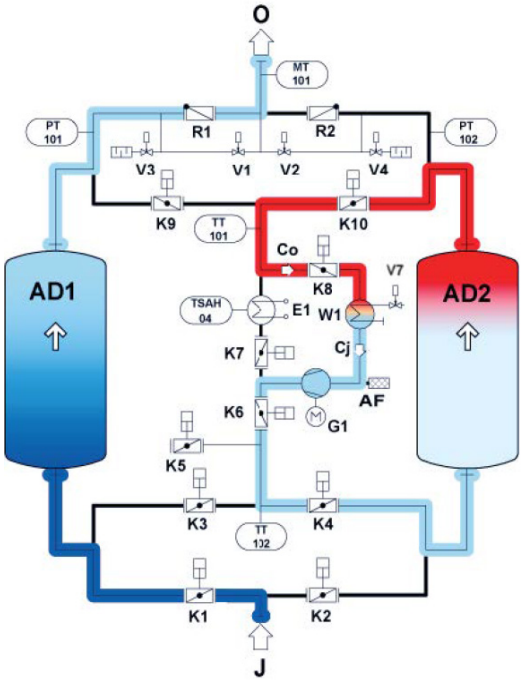

J = Wet air inlet
O = Dry air outlet
Rj = Desorption air inlet
Ro = Desorption air outlet
Cj = Cooling air inlet
Co = Cooling air outlet

Donaldson. FILTRATION SOLUTIONS

PRODUCT DESCRIPTION

FEATURES	BENEFITS
Heat-regenerated adsorption dryer with ambient air regeneration and closed-loop cooling concept	Utilization of compression heat during heating process and closed-loop cooling lead to energy-efficient desiccant regeneration at even high ambient temperature and high ambient humidity conditions.
Ultraconomy dewpoint control	Monitoring and control of dewpoint ensure full utilization of desiccant capacity. High energy and cost saving opportunity as well as full drying performance control.
Closed-loop cooling concept as well as 6 hours cycle and special desiccant layer concept	Reliable and stable dewpoint performance even under challenging conditions.
Welded steel vessels and flanged main pipeline design	Robust, long-life, leakage-proof and service-friendly design
12 dryer sizes from 1000 up to 8750 m³/h nominal flow capacity	Wide range of dryer flow capacities and connection sizes matching to user requirements.
Programmable logic controller Simatic S7-1215C	Controller ready for Industry 4.0 and various connectivity options. Opportunity for dryer condition and performance monitoring.
Touch Panel KTP700	High operational comfort due to self-explaining menu. Indication of all operation data incl. dewpoint and function status as well as alarm and service messages on the main menu ensures high operating safety.
Valve position control incl. alarm message indication and failure management concept	Valve position control on main switch-over valves for reliable and safe operation
230 V AC power supply for up to 4 condensate drains included	No external power supply needed; reduced installation effort and cost.
4 x condensate drain alarm inputs and additional 4 x individual alarm inputs included	Enhanced monitoring of compressed air system performance including individual alarm messages.
Control box temperature control	Air-cooler fan, thermostat and filter for control box cooling included for safe operation at even challenging ambient temperatures.
Single conductor cable marking	Easy identification of cable connection for trouble shooting or replacement of electrical components.
High temperature resistant painting process	Long-life corrosion protection
Cooling water On/Off valve included	Cooling water is only consumed during cooling phase. This is saving cooling energy during the regeneration process.

Donaldson. FILTRATION SOLUTIONS

PRODUCT DESCRIPTION

In addition to the features already included in the standard dryer configuration, a range of defined standard options are available.

OPTIONS	DESCRIPTION AND BENEFITS
ENERSAVE Concept	Optimized desiccant layer concept requires lower regeneration temperature and offers additional energy saving opportunities in a range of 10-14% less average power consumption (at nominal flow and conditions).
Adsorber vessel and pipeline insulation	Insulation of heater housing is already included in standard configuration. Further options of adorber vessel insulation and upper and lower pipelines optionally available for saving of heat energy and protection against hot surfaces.
„Weekend STOP“ Mode	Shut-off of air flow across dewpoint sensor and additional output on controller for closing a shut-off valve downstream the dryer when controller is switched off. Dryer remains under pressure during shut-down period (e.g. during weekend).
Differential pressure monitoring	Differential pressure transmitter for monitoring of differential pressure from inlet of dryer (or pre-filters) to outlet of dryer (or after-filters). Control of dryer and filter condition. Data are indicated on controller. Alarm set-point and indication possible.
Flow monitoring	Flow transmitter for monitoring of flow demand and characteristics at dryer outlet. Can be combined with energy monitoring option.
Energy monitoring and management	Energy management 1 without flow monitoring: Measurement of voltage, current and power consumption per hour. Energy management 2 with flow monitoring: Measurement of voltage, current and power consumption per hour and per m^3/h. Power consumption of dryer under control
Data communication options	Option 1: Communication Processor for MODBUS TCP/IP Option 2: MODBUS RTU Module Option 3: Profibus Module Data link to user network for full monitoring of dryer status, service and alarm messages and sensor data
MMC card	Back-up memory for original dryer program
Seaworthy Packaging	Packaging option for special transport / storage conditions
Further options on request	Individual dryer configuration as per customer's requirements and tailor-made solutions, also for other industrial gases available on request.

Donaldson. FILTRATION SOLUTIONS

PRODUCT DESCRIPTION

TECHNICAL DATA	
Adsorber Vessel	
Pressure Vessel Material	Carbon steel
Design Data	Design pressure: 11 bar g (sizes 0375 - 2750) 10 bar g (sizes 3500 - 8750) Design temperature: -10°C / 230°C
Design, Manufacturing and Testing	Acc. to EN 13445
Approval	Acc. to PED 2014/68/EU
Flow Distributor Material	Stainless steel
Piping	
Design Data	Flange pressure rating: PN16 Design pressure: 10 bar g Design Temperature: -10°C / 230°C
Piping Material	Carbon steel
Design, Manufacturing and Testing	Acc. to AD 2000
Approval	Acc. to PED 2014/68/EU
Electrical Controller	
Design	Acc. to VDE / IEC
Power Supply	3 Phases / 400 V – 50 Hz
Control Voltage	24 V DC / 230 V AC – 50 Hz
PLC	Siemens S7-1200 with CPU 1215C
Touch Display	KTP 700
Protection Class	IP 54, acc. to IEC/EN 60529
Control Box Material	Carbon steel, powder coated, RAL 7035
Potential-Free Alarm Contact	Included
Main Switch	Included
Remote On/Off Contact	Included

Donaldson. FILTRATION SOLUTIONS

PRODUCT DESCRIPTION

TECHNICAL DATA	
Nominal Standard Conditions	
Pressure Dewpoint	-70°C (-40°C)
Operating Inlet Pressure	7 bar g
Operating Inlet Temperature	25°C (35°C)
Inlet Humidity	100% saturated
Operating Limits	
Media	Compressed Air / Nitrogen
Operating Pressure	4 – 10 bar g
Operating Temperature	5 – 30°C (5 - 35°C)
Ambient Temperature	5 – 40°C
Maximum Temperature / Humidity Conditions Blower	35°C / 45% r.H. to 30°C / 60% r.H.
Installation	Indoor

INLET / OUTLET CONNECTION DIRECTION

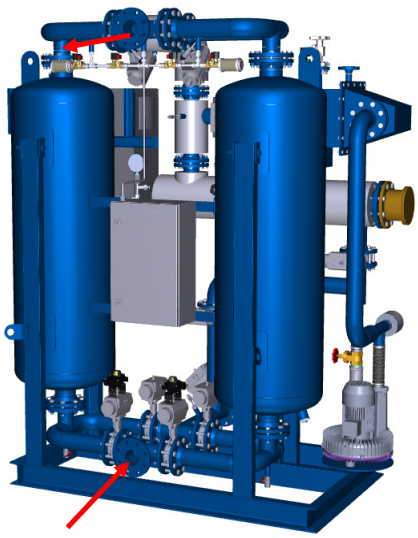

HRS-L 1000 - 8750:
Inlet and Outlet on Dryer Back Side

Donaldson. FILTRATION SOLUTIONS

PRODUCT DESCRIPTION

Technical Data				
HRS-L	Nominal Volume Flow (1 bar, 20°C) m^3/h[1]	Pipe Connection Size	Installed Power kW	Differential Pressure mbar[2]
1000	1000	DN80	18.5	110
1350	1350	DN80	24.0	180
1650	1650	DN80	28.0	170
1950	1950	DN100	32.5	120
2250	2250	DN100	38.0	140
2750	2750	DN100	42.5	180
3500	3500	DN100	52.5	100
4000	4000	DN150	67.5	80
5000	5000	DN150	71.0	90
6000	6000	DN150	86.0	100
7000	7000	DN180	95.0	120
8750	8750	DN200	115.0	80

[1] Nominal flow at 7 bar g, 35°C; [2] at nominal flow

Donaldson. FILTRATION SOLUTIONS

SIZING

Type	Pressure Dewpoint (PDP)	Inlet Temp.	Operating Pressure (bar g)						
			4	5	6	7	8	9	10
			Correction Factor (f)						
HRS-L	-40°C	30°C	0.72	0.92	1.09	1.25	1.36	1.45	1.51
		35°C	0.55	0.70	0.86	1.00	1.12	1.25	1.37
		40°C	0.33	0.45	0.58	0.71	0.82	0.92	1.03
	-70°C	20°C	0.79	0.92	1.09	1.14	1.22	1.34	1.45
		25°C	---	0.88	0.97	1.10	1.18	1.30	1.42
		30°C	---	---	0.86	1.00	1.12	1.25	1.35

Sizing Example:

Volume flow V_{nom} = 4000 m³/h, inlet temperature = 20°C, operating pressure = 8 bar g, PDP =-70°C

$$Vcorr = \frac{Vnom}{f} = \frac{4000\ m^3/n}{1.22} = 3279\ \mathrm{m^3/h}$$

Calculated dryer size = HRS-L 3500

Donaldson. FILTRATION SOLUTIONS

DIMENSIONS / WEIGHT

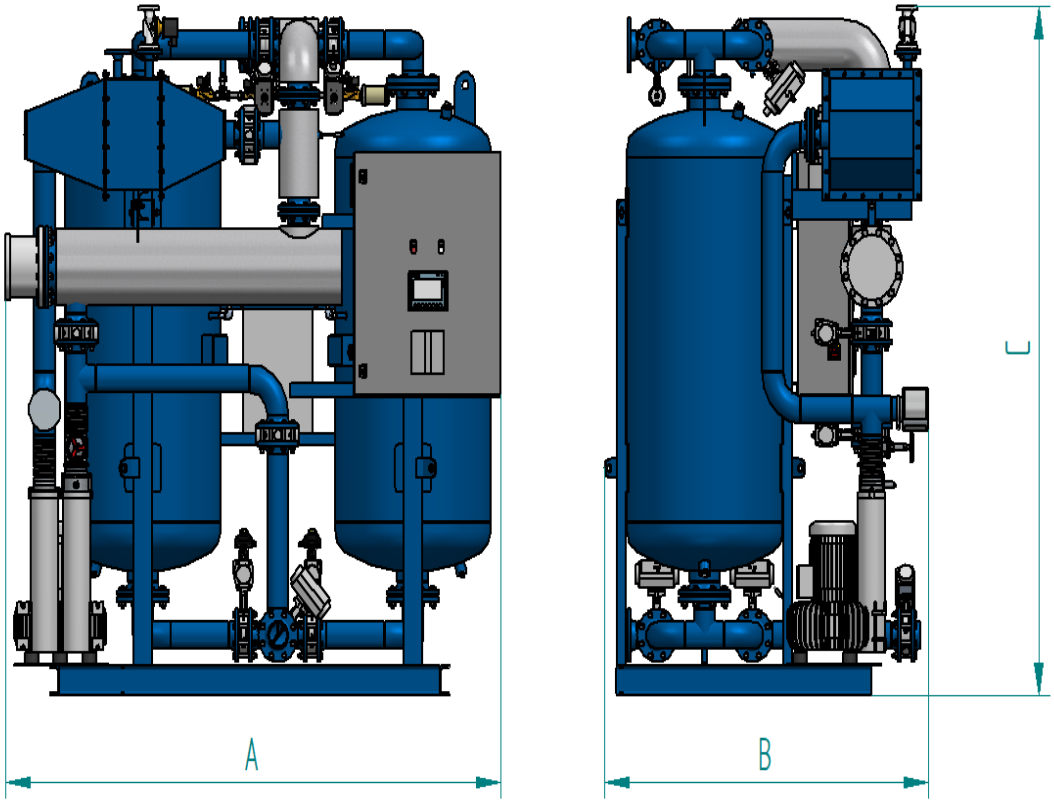

HRS-L	Flange Connection	Weight kg	A mm	B mm	C mm
1000	DN80	1640	2291	1284	2460
1350	DN80	1850	2360	1442	2576
1650	DN80	2130	2450	1504	2628
1950	DN100	2570	2500	1630	2738
2250	DN100	2720	2518	1675	2758
2750	DN100	3200	2708	1765	2834

DIMENSIONS / WEIGHT

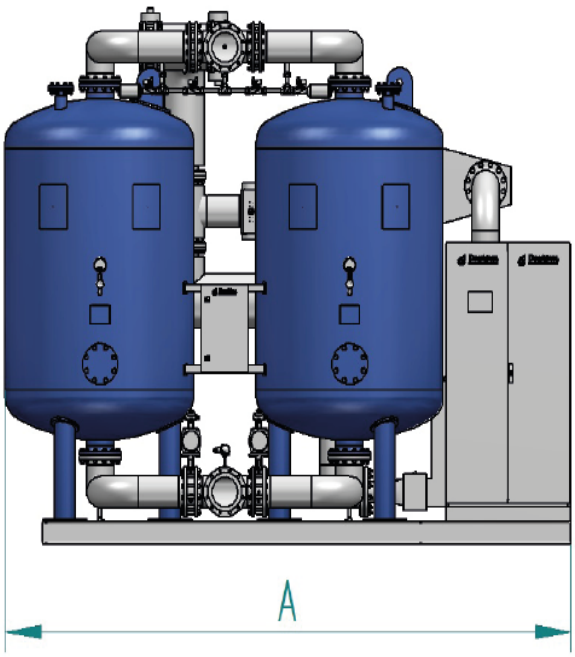

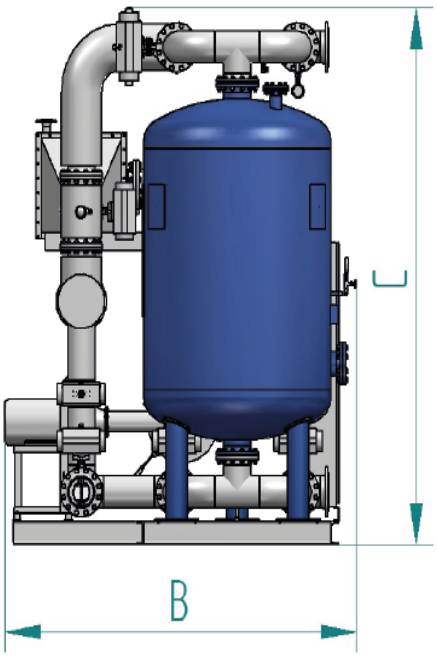

HRS-L	Flange Connection	Weight kg	A mm	B mm	C mm
3500	DN100	3990	3663	1988	2998
4000	DN150	4850	3699	2013	3207
5000	DN150	5990	3914	2281	3310
6000	DN150	6900	4056	2381	3185
7000	DN150	7480	4256	2481	3247
8750	DN200	10050	4520	2813	3660

For more information please contact your Donaldson Sales Representative and visit our website at **www.donaldson.com**.

Donaldson.
FILTRATION SOLUTIONS

Explore our solutions
at shop.donaldson.com

Contact us

Donaldson Europe BV
Research Park No. 1303, Interleuvenlaan, 1
B-3001 Leuven, Belgium
Telephone: +32 (0) 16 38 38 11

Technical Data Sheet No. F119012 EN (11/25) Ultradryer HRS+ Heat-Regenerated Adsorption Dryer.
©2025 Donaldson Company, Inc. Donaldson and the color blue are marks of Donaldson Company, Inc.
All other marks belong to their respective owners. All rights reserved.

Important Notice: Many factors beyond the control of Donaldson can affect the use and performance of Donaldson products in a particular application, including the conditions under which the product is used. Since these factors are uniquely within the user's knowledge and control, it is essential the user evaluate the products to determine whether the product is fit for the particular purpose and suitable for the user's application. All products, product specifications, availability and data are subject to change without notice, and may vary by region or country. This document has been translated using AI. It based on German mother document.