PROCESS FILTRATION

Filtration Systems

High Flow Skids

MAIN FEATURES & BENEFITS

- Highly customizable in alignment, equipment and installation
- Suitable for flow rates up to 200 m³/h
- Stainless Steel EN 1.4404 for food contact material
- Electropolished surfaces with Ra 0,8 µm
- Hygienic design adheres to stringent sanitary standards
- Choice of filtration options for pre-filtration and removal of chlorine and heavy metals.

PRODUCT DESCRIPTION

The High Flow Filtration Skid is designed to handle flow rates of 200 m³/h, making it an ideal solution for water treatment applications such as pre-RO filtration and process water treatment. With exceptional modularity and customization, the High Flow Skid can be tailored to meet specific process requirements. Whether scaling up capacity, integrating additional filtration stages, or incorporating various control elements, the skid offers a high degree of flexibility to adapt to different operational needs.

For maximum installation versatility, the skid can be mounted in both horizontal and vertical alignments. It features hygienic feet, ensuring compliance with industry standards for clean and sanitary installations. Additionally, the inlet and outlet connections are reversible, allowing seamless integration into existing process lines without extensive modifications.

The High Flow Skid can be equipped with basic manifolds, including a drain system, pressure gauge, and butterfly valve, providing essential functionality for effective operation and maintenance.

These components help streamline filtration processes while ensuring ease of use. For more advanced process monitoring and control, an additional option is available. This configuration includes a flow transmitter, differential pressure transmitter, and a junction box, enabling real-time performance tracking and seamless integration into automated process control systems.

INDUSTRIES

- Bottled Water

- Dairy

- Breweries

- Softdrinks

- Environment

APPLICATIONS

- Pre-RO Water Treatment
- Bottled Water
- Process Water
- Waste and Wastewater
- Chemical removal

MATERIAL COMPLIANCE EU & US

All components meet the EU requirements for direct food contact use in accordance with EC/1935/2004 and subsequent amendments.

All polymer based components used for sealing purposes meet the US requirements for food contact use in accordance with FDA 21 CFR 177.2600

PRODUCT SPECIFICATIONS

General Information	
Max. Pressure Water	10 bar g (145 psi g)
Max. Pressure Steam	1 bar g @ +121 °C (14 psi g @ +250 °F)
Shortterm Temp. Range	+121 °C max. 30 min (+250 °F)
Process Temp. Range	-10 °C / +95 °C (+14 °F / +203 °F)
Ambient Temp. Range	-10 °C / +60 °C (+14 °F / +140 °F)
Material	Housing and piping in EN 1.4404 (AISI 316), Seals made of EPDM and Silicone
Cleaning	CIP; SIP on request

Model	Part Number	No. of Housings	Size of Filter Element [inch]	Housing Volume [L]	Inlet/Outlet Size Clamp DIN32676 [mm]	Recommended Flow Rate* [m³/h]
2x40"	AG1397501	2	40	each 44	DN100	80
2x60"	AG1397601	2	60	each 62		100
3x40"	AG1397701	3	40	each 44	DN150	120
3x60"	AG1397801	3	60	each 62		150
4x40"	AG1397901	4	40	each 44		160
4x60"	AG1398001	4	60	each 62		200

*Varies based on elements, viscosity, etc.

Accessories			
Description	**Part Number**	**Suited for**	**Connection**
Option 1 (green colored)			
Drain DN100	AG1405501	2x40", 2x60"	DN100 DIN32676 Clamp
Drain DN150	AG1405601	3x40", 4x40", 3x60", 4x60"	DIN150 EN1092-1 Flange
Option 2 (red colored)			
Flow/dp Transmitter DN100	AG1381301	2x40", 2x60"	DN100 DIN32676 Clamp
Flow/dp Transmitter DN150	AG1381401	3x40", 4x40", 3x60", 4x60"	DN150 DIN32676 Clamp

DIMENSIONS

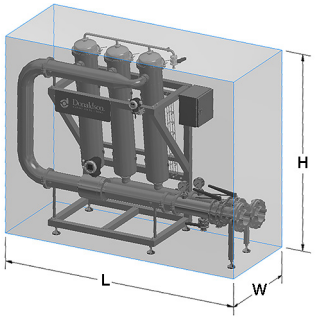

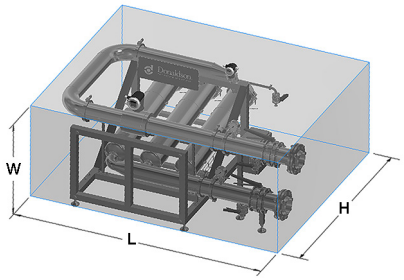

Frame and Housing

Size	L [mm]	W [mm]	H [mm]	Net Weight [kg]	Water Filled Weight [kg]
2x40″	930	780	2060	153	251
2x60″	930	830	2600	195	328
3x40″	1280	780	2060	216	382
3x60″	1280	830	2600	273	493
4x40″	1630	780	2060	246	468
4x60″	1630	830	2600	350	644

with Basic Equipment

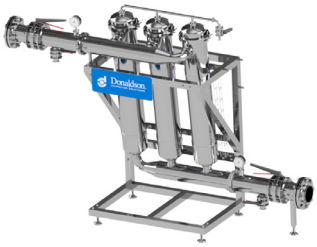

Size	L [mm]	W [mm]	H [mm]	Net Weight [kg]	Water Filled Weight [kg]
2x40"	1262	800	2060	205	310
2x60"	1330	860	2600	247	388
3x40"	1920	840	2060	316	496
3x60"	1920	880	2600	373	607
4x40"	2270	840	2060	346	594
4x60"	2270	880	2600	450	770

with Advanced Monitoring

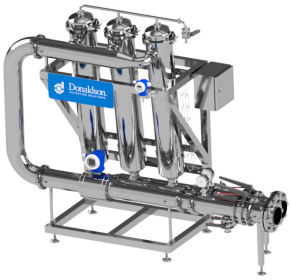

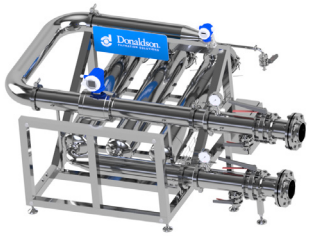

Size	L [mm]	W [mm]	H [mm]	Net Weight [kg]	Water Filled Weight [kg]
2x40"	1750	950	2060	250	372
2x60"	1750	1000	2600	292	453
3x40"	2470	950	2060	378	601
3x60"	2470	1000	2600	435	721
4x40"	2750	950	2060	408	707
4x60"	2750	1000	2600	512	892

Donaldson
FILTRATION SOLUTIONS

donaldson.com/process

Donaldson Filtration Deutschland GmbH
Büssingstraße 1
42781 Haan

Contact us

Important Notice: Many factors beyond the control of Donaldson can affect the use and performance of Donaldson products in a particular application, including the conditions under which the product is used. Since these factors are uniquely within the user's knowledge and control, it is essential the user evaluate the products to determine whether the product is fit for the particular purpose and suitable for the user's application. All products, specifications, availability and data are subject to change without notice, and may vary by region or country.

F119362 ENG (12/25) High Flow Skid©2025 Donaldson Co., Inc. Donaldson and the color blue are marks of Donaldson Company, Inc. All other marks belong to their respective owners.