Digitized Automation for a Changing World

Delta Power Regenerative Unit REG2000 Series

www.deltaww.com

DELTA

Smarter. Greener. Together.

Features

- Compact design with reactor included, easy to wire and easy to install

Traditional solution
AC motor drive (55 kW / 400 V) + Brake Unit + Brake Resistor

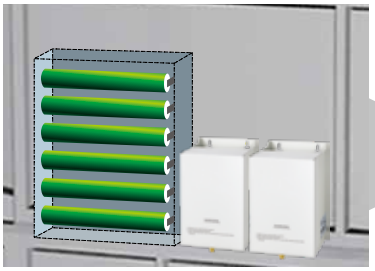

Delta solution
AC motor drive (55 kW / 400 V) + Delta REG2000

- Outstanding energy-saving results with more than 95% power regeneration efficiency
- Lessens traditional brake resistors to reduce unnecessary heat generation

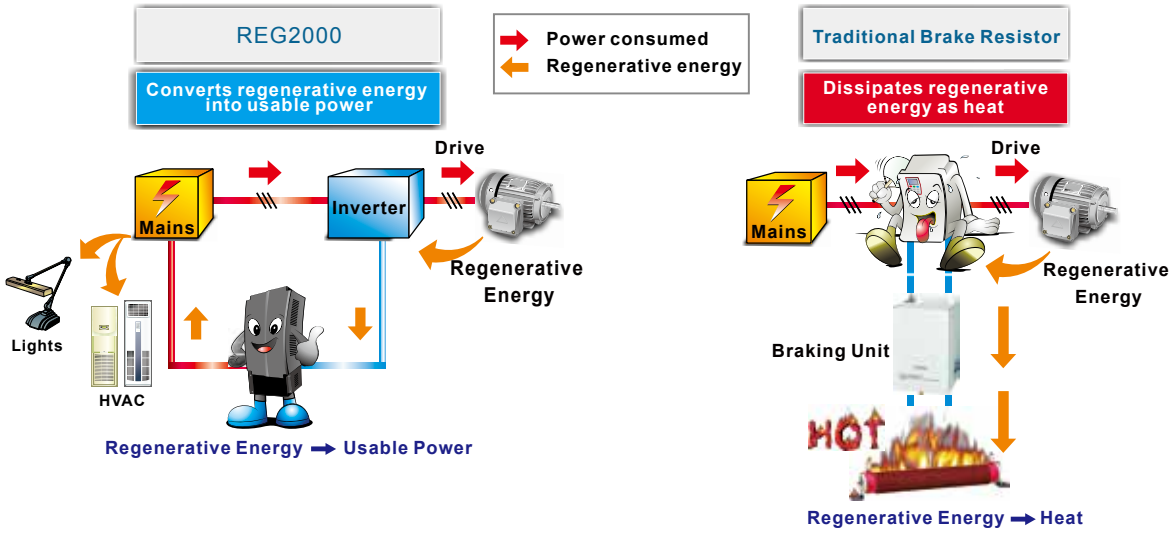

- Improves motor braking capability up to 150% from 125% of braking resistors
- Supports RS-485 (Modbus) communication for real-time monitoring and regenerated energy collection
- High application flexibility, compatible with all kinds of AC motor drives and servo systems in the market
- No need to set parameters for general applications; easy installation to any existing equipment
- Supports 4 parallel connections* for power expansion in various applications

* This should run at 20% derating

Applications

- **Large-inertia load applications:** centrifuge equipment, industrial laundries, heavy duty conveyors, roving machines, gantry machine tools and more
- **4-quadrant load applications:** elevators, cranes and hoists, pumpjacks and more
- **Quick braking applications:** machine tools, bag making machines, auto storage and retrieval systems, press machines and more
- **Long-term energy feedback applications:** printing machines, escalators and more

Applications

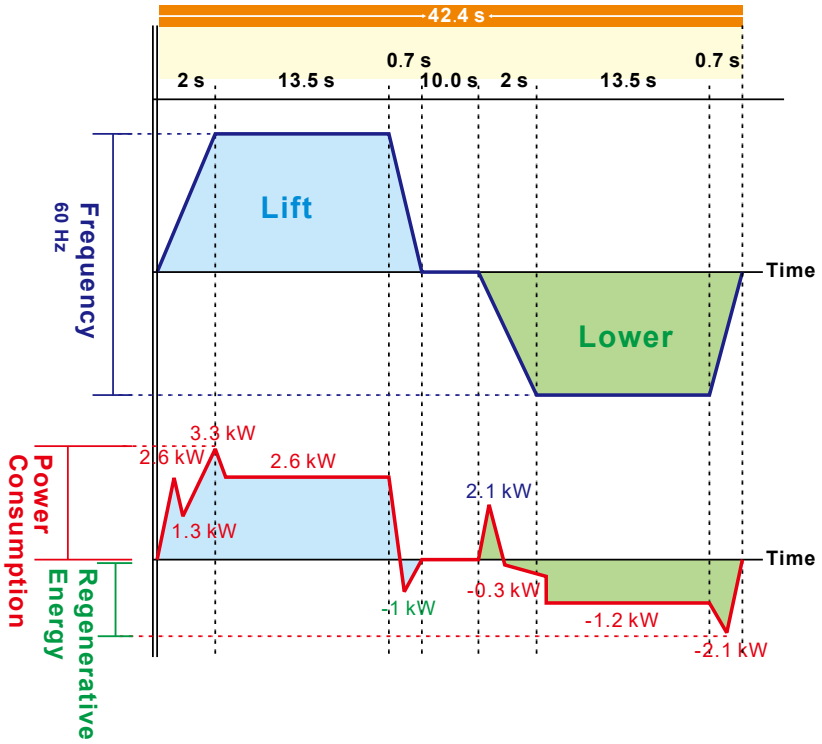

■ Hoist

This hoist system works 12 hours a day and 265 days a year. Each cycle takes 42.4 seconds and the cost for 1 kWh is NTD 3.5.

Hoist system: 5.5 kW motor + REG2000
Hoist capacity: 10 tons
Hoist speed: 3.6 m/min
Loads: 3 tons
Cycle: 5 times

REG2000	+Whr	87.088
	-Whr	-28.89
Brake Resistor	+Whr	86.033
	-Whr	0

– Average savings per cycle : $\frac{28.89}{5}$ = 5.778 Whr

– Operation time per cycle: 42.4 sec

– Operation/day:

$\frac{12\text{ (hr) x 60 (min) x 60 (sec)}}{42.4\text{ (sec)}}$ = 1,019 cycles

Performance using Delta's REG2000:

– Energy savings: $\frac{28}{87}$ x100% = **32%**

– Annual savings:

$\frac{5.778}{1000}$ (kWhr/cycle) x 1,019 (cycle/day) x 265 days x NTD 3.5 = **NTD 5,461** (USD 183)

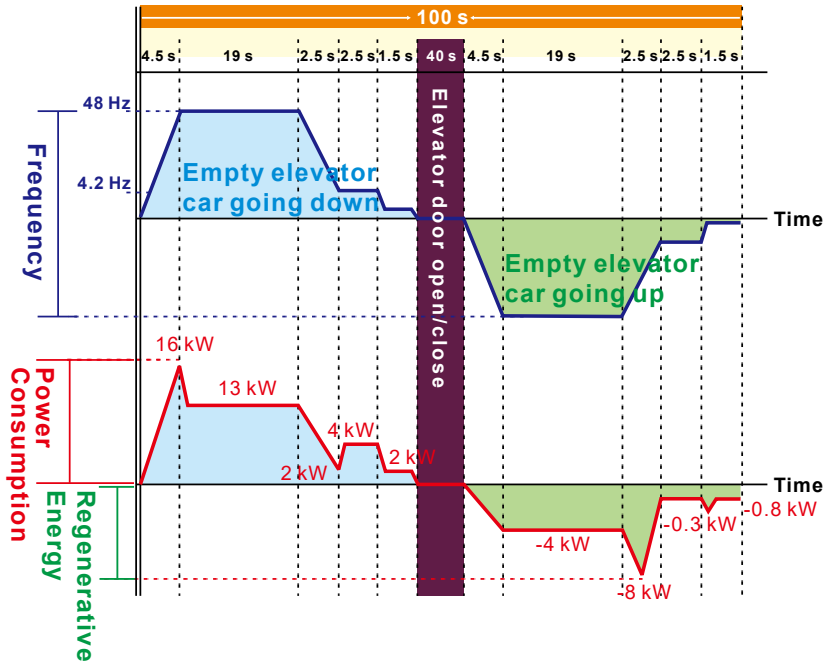

■ Elevator

This elevator system works 12 hours a day and 265 days a year. Each cycle takes 100 seconds and the cost for 1 kwh is NTD 3.5.

Elevator system: 22 kW motor + REG2000
Elevator capacity: 2 tons
Elevator speed: 60 m/min
Height: B1~4F
Loads: empty car
Cycle: 5 times

REG2000	+Whr	360.7
	-Whr	111.1
Brake Resistor	+Whr	354.2
	-Whr	0

– Average savings per cycle : $\frac{111}{5}$ = 22.2 Whr

– Operation time per cycle: 100 sec

– Operation cycle per day:

$\frac{12\text{ (hr) x 60 (min) x 60 (sec)}}{100\text{ (sec)}}$ = 432 cycles

Performance using Delta's REG2000:

– Energy savings: $\frac{111}{361}$ x100% ≒ **31%**

– Annual savings:

$\frac{22.2}{1000}$ (kWhr/cycle) x 432 (cycle/day) x 265 days x NTD 3.5 = **NTD 8,895** (app. USD 280)

Flexible Deployment

Diverse deployments of REG2000 for various field applications, saving installation space and cost

■ One REG2000 for multiple AC motor drives

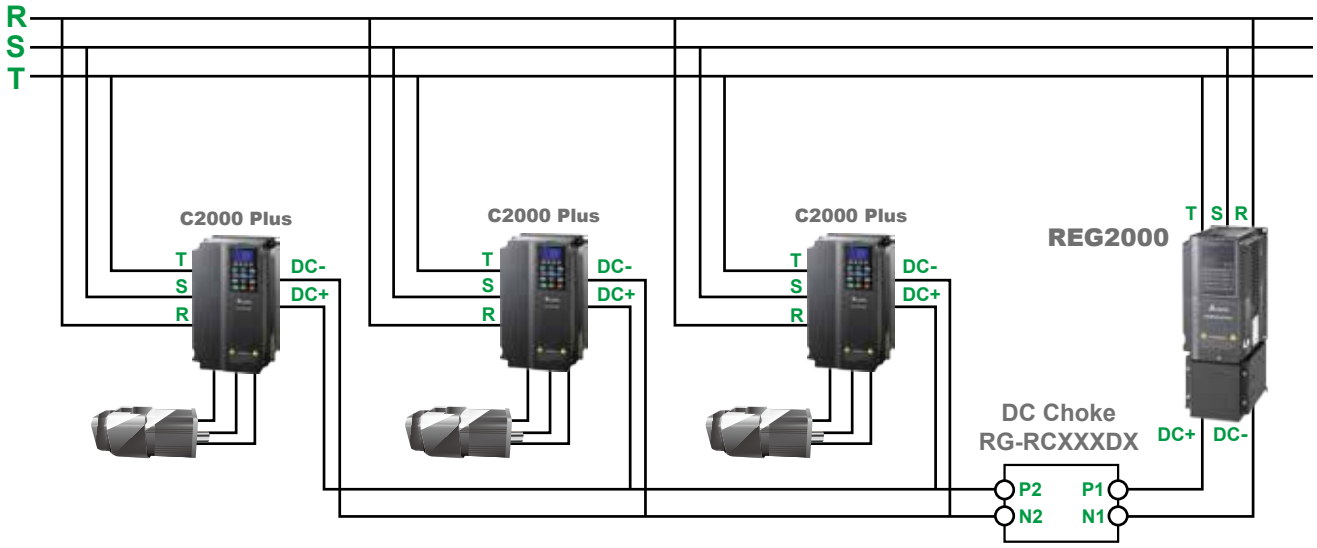

■ Multiple REG2000s for one AC motor drive

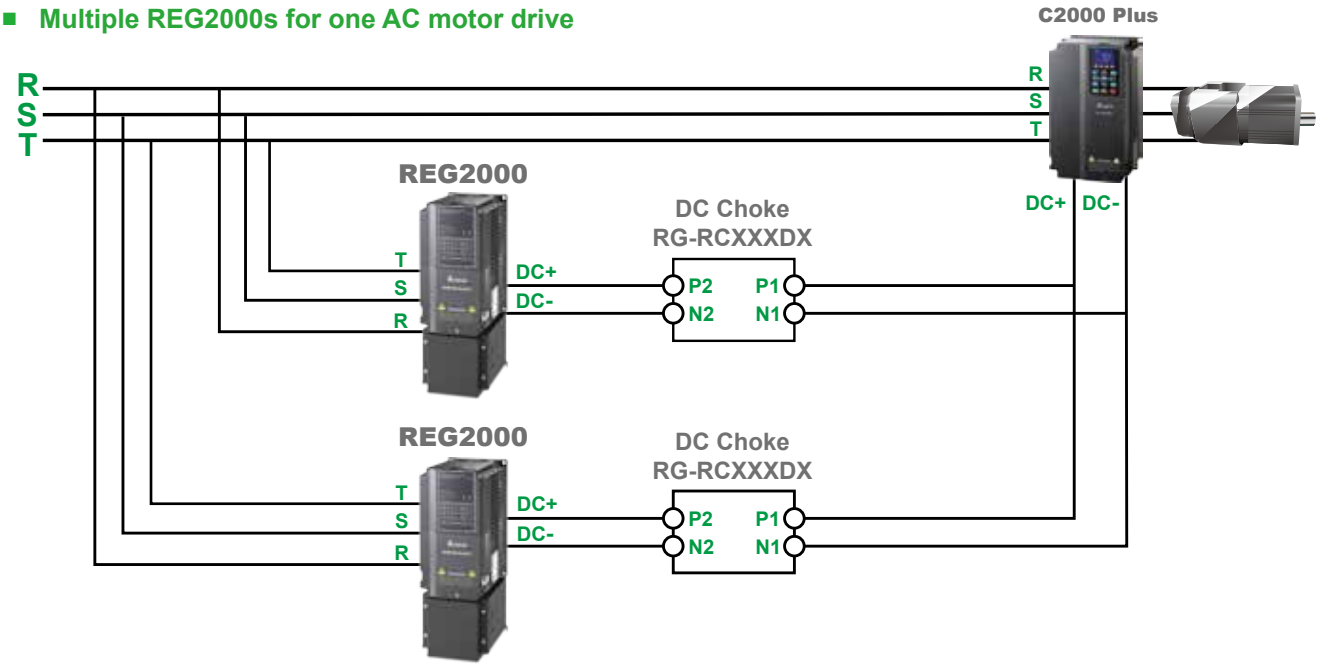

This figure is for demonstration purposes only, please refer to wiring diagrams for wiring details.

Specifications

230 V

	Frame	A		B			C	
	Model number REG_ _ _A23A-21	075	110	150	185	220	300	370
	Power rating (kW)	7.5	11	15	18.5	22	30	37
DC bus	Rated input current (A_{DC})	24.0	39.0	46.0	59.8	73.2	97.6	122
DC bus	Activation range of voltage	270~390 V_{DC} (adjustable setting via Pr.01-08)						
Mains	Rated output current (A_{AC})	20	32	38	49	60	80	100
Mains	Voltage / frequency rating	3-phase AC 200 V~240 V (-15% ~ +10%), 50/60 Hz						
Mains	Operation voltage	170~265 V_{AC}						
Mains	Frequency tolerance	47~63 Hz						
	Net weight	7.5±0.5 Kg		16.5±0.5 Kg			25.5±0.5 Kg	28.0±0.5 Kg

460 V

	Frame	A			B			C		
	Model number REG_ _ _A43A-21	075	110	150	185	220	300	370	450	550
	Power rating (kW)	7.5	11	15	18.5	22	30	37	45	55
DC bus	Rated input current (A_{DC})	12.8	20.7	24.4	30.5	39.0	52.5	59.8	73.0	91.5
DC bus	Activation range of voltage	516~780 V_{DC} (adjustable setting via Pr.01-08)								
Mains	Rated output current (A_{AC})	10.5	17	20	25	32	43	49	60	75
Mains	Voltage / frequency rating	3-phase AC 380 V - 480 V (-15%~+10%), 50/60 Hz								
Mains	Operation voltage	323~528 V_{AC}								
Mains	Frequency tolerance	47~63 Hz								
	Net weight	7.5±0.5 Kg			17.0±0.5 Kg			26.5±0.5 Kg	29.0±0.5 Kg	29.5±0.5 Kg

Common Characteristics

Control Characteristics	Control method	SVPWM
Control Characteristics	Brake torque	80% rated output current when regenerating continuously ; 100% rated output current when regenerating for 1 minute at 25% ED
Control Characteristics	Overload capacity	150% rated output current when regenerating for 10 seconds at 10% ED
Control Characteristics	Generic input signal	5 sets of signal terminals 24 V_{DC} 6 mA
Control Characteristics	Generic output signal	2 sets of signal terminals 48 V_{DC} 50 mA; 1 set of signal terminal for relay output
Control Characteristics	Cooling method	Forced air cooling (Fan cooling)
Environment	Enclosure	IP20 / NEMA 1
Environment	Environment for operation, storage and transportation	If the Power Regeneration Unit is installed at altitude 0~1000 m, follow normal operation restrictions. If it is installed at altitude 1000~3000 m, decrease 2% of rated current or lower 0.5℃ of temperature for every 100 m increase in altitude. Maximum altitude for Corner Grounded is 2000 m.
Environment	Operation temperature	-10~40℃
Environment	Storage temperature	-25~+70℃
Environment	Rated humidity	Blow 90% RH (Non-condense)
Environment	Vibration	[Frame A & B] 2~13.2 Hz, 1.0 mm / 13.2~55 Hz, 0.7~1.5 G / 55~512 Hz, 1.5 G (IEC 60068-2-6) [Frame C] 2~13.2 Hz, 1.0 mm / 13.2~55 Hz, 0.7~1.0 G / 55~512 Hz, 1.0 G (IEC 60068-2-6)
	Certifications	CE, UL, EAC, KC*

Wiring

Applicable to frames A~C

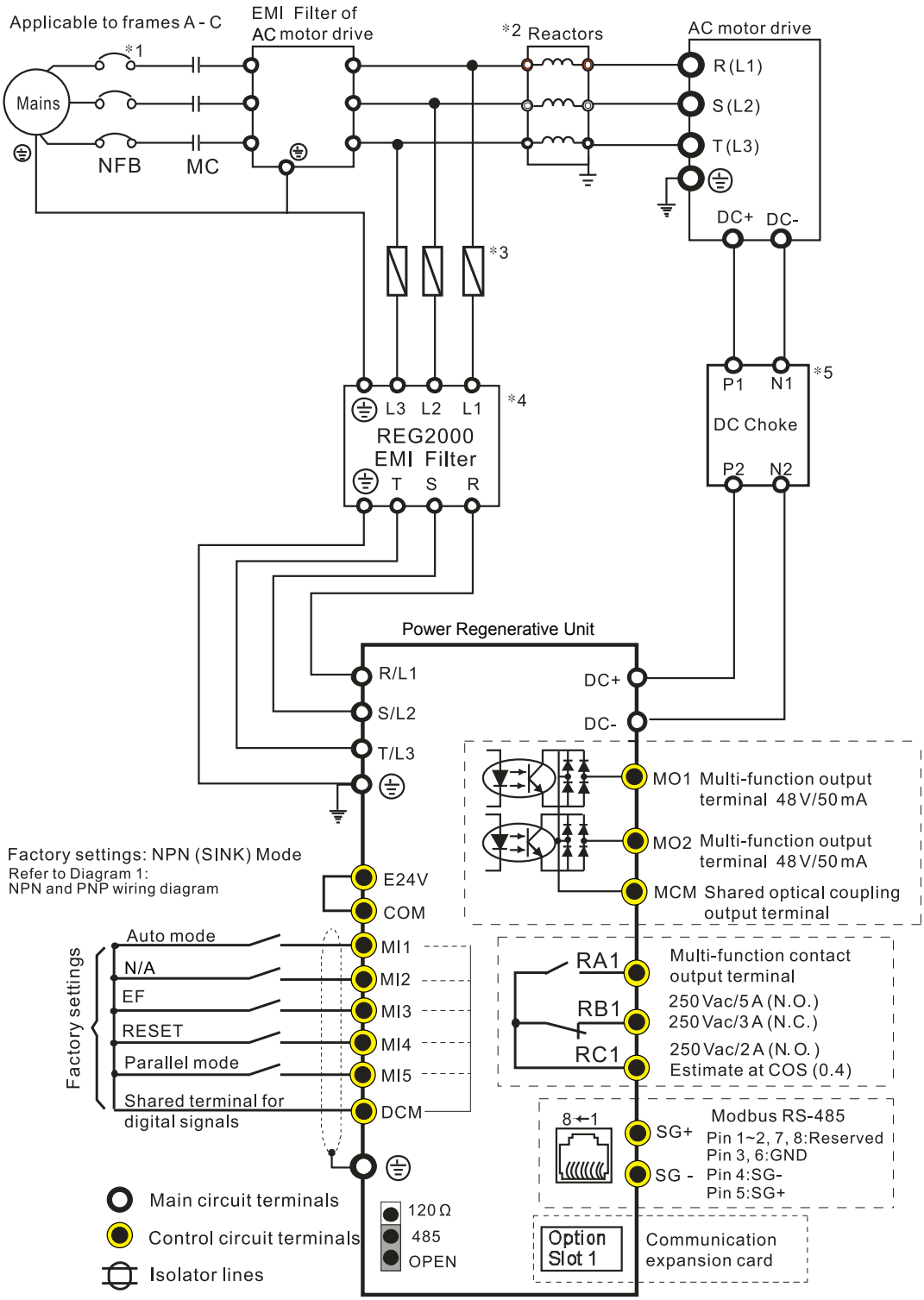

Note:

*1. The NFB can be selected based on the selection guide of the drive.
*2. If a reactor is connected to the drive, install the reactor here (optional).
*3. Please refer to the user manual for selection of fuses.
*4. Please refer to the user manual for selection of a REG2000 EMI filter.
*5. DC choke is included in the package, please install following the instruction shown in the diagram.

Dimensions

Frame A

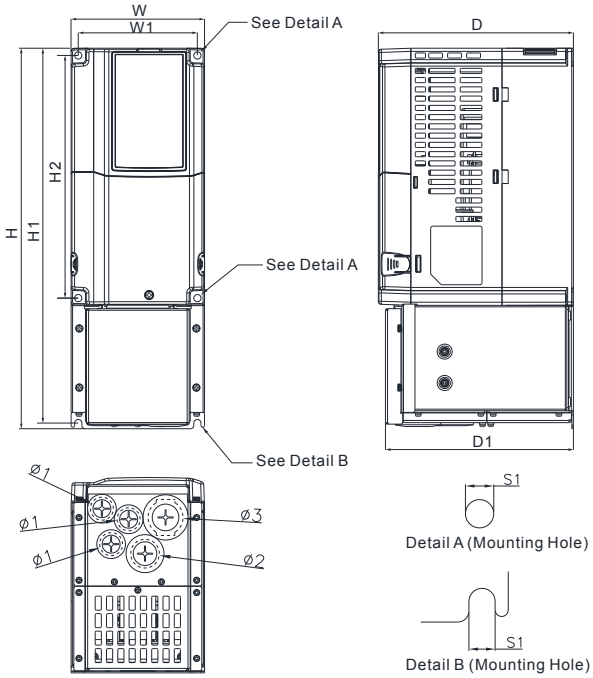

MODEL

REG075A23A-21
REG110A23A-21
REG075A43A-21
REG110A43A-21
REG150A43A-21

Unit : mm[inch]

Frame		W	H	D	W1	H1	H2	D1	S1	Ø1	Ø2	Ø3
A1	mm	130.0	370.0	190.0	116.0	357.5	236.0	183.0	7.0	22.2	28.0	34.0
	inch	5.12	14.56	7.48	4.57	14.07	9.29	7.20	0.28	0.87	1.10	1.34

Frame B

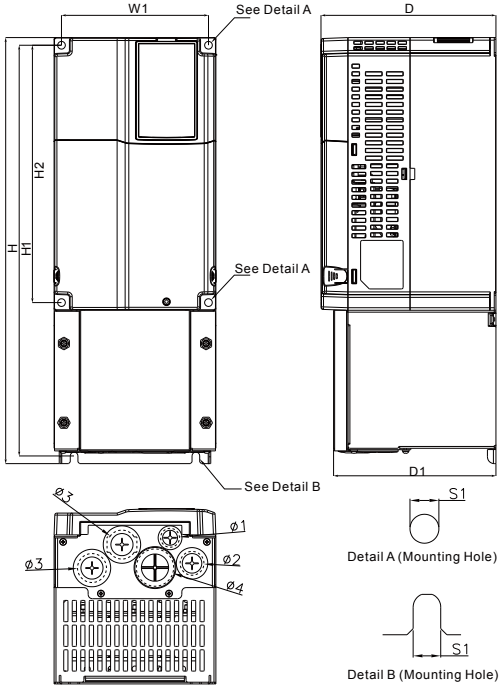

MODEL

REG150A23A-21
REG185A23A-21
REG220A23A-21
REG185A43A-21
REG220A43A-21
REG300A43A-21

Unit : mm[inch]

Frame		W	H	D	W1	H1	H2	D1	S1	Ø1	Ø2	Ø3	Ø4
B1	mm	190.0	500.0	205.0	172.5	482.0	302.0	190.5	9.0	22.2	28.0	34.0	43.8
	inch	7.48	19.68	8.09	6.79	18.98	11.89	7.50	0.35	0.87	1.10	1.34	1.72

Frame C

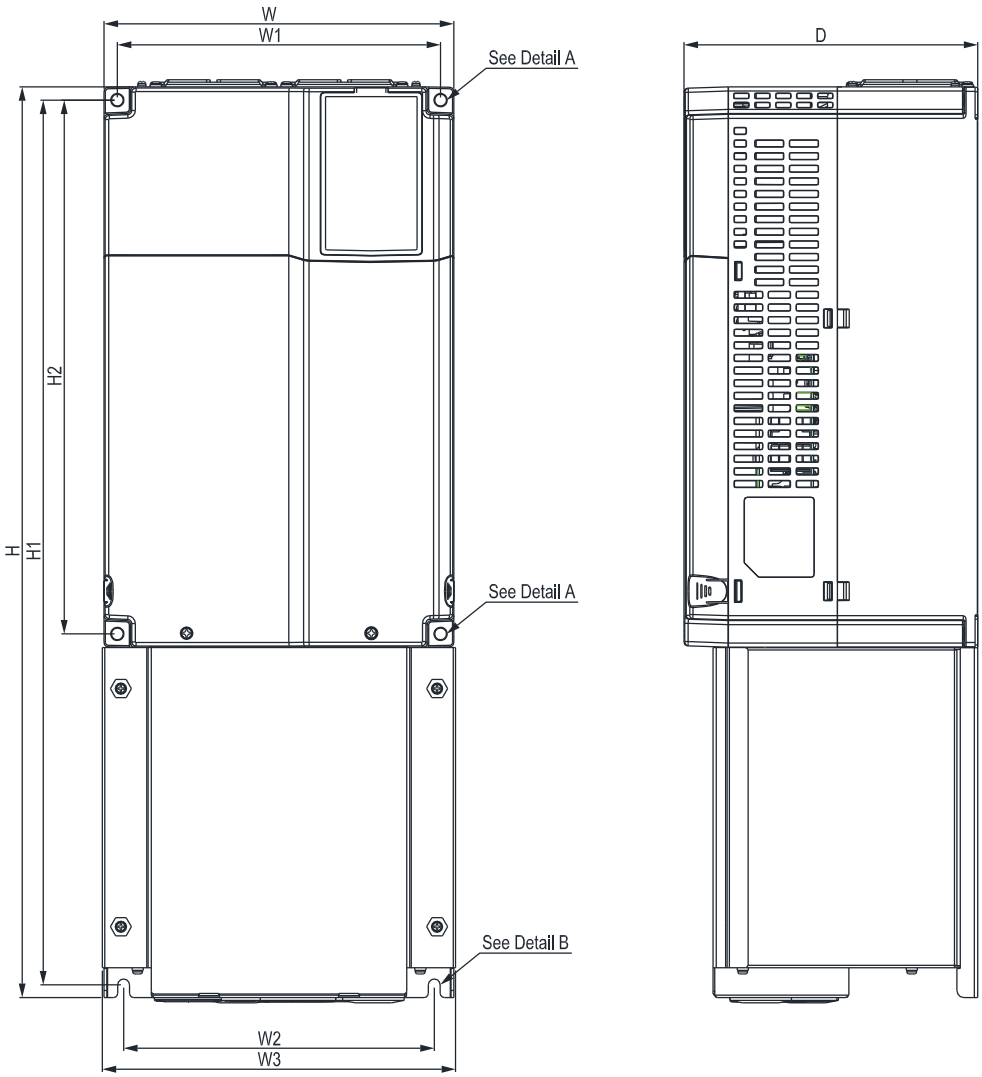

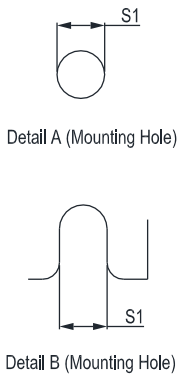

MODEL

REG300A23A-21
REG370A23A-21
REG370A43A-21
REG450A43A-21
REG550A43A-21

Unit : mm [inch]

Frame		W	H	D	W1	W2	W3	H1	H2	S1	Ø1	Ø2	Ø3	Ø4	Ø5
C1	mm	250.0	650.0	210.0	231.0	220.0	252.5	631.5	381.0	8.5	22.2	28.0	34.0	44.0	50.1
	inch	9.84	25.59	8.27	9.09	8.74	9.94	24.86	15.00	0.33	0.87	1.10	1.34	1.73	1.97

Model Name

REG 075 A 43 A 21

Protection Level
21 IP20 NAMA1

Installation Method
A Wall mount

Input Voltage
23 230 V 3-PHASE
43 460 V 3-PHASE

Product Series
A Series

Power Range

0.75	7.5 kW	185	18.5 kW	370	37 kW
110	11 kW	220	22 kW	450	45 kW
150	15 kW	300	30 kW	550	55 kW

Model Name
Power Regenerative Unit

EMI Filter Specifications

230 V	REG EMI Filter	Weight (kg)
REG075A23A-21	RG-EF110A2	3.2±0.5
REG110A23A-21		
REG150A23A-21	RG-EF220A2	4.8±0.5
REG185A23A-21		
REG220A23A-21		
REG300A23A-21	RG-EF370A2	6.0±0.5
REG370A23A-21		

460 V	REG EMI Filter	Weight (kg)
REG075A43A-21	RG-EF150A4	3.2±0.5
REG110A43A-21		
REG150A43A-21		
REG185A43A-21	RG-EF300A4	4.8±0.5
REG220A43A-21		
REG300A43A-21		
REG370A43A-21	RG-EF550A4	6.0±0.5
REG450A43A-21		
REG550A43A-21		

Model	AWG Size		Torque (±10%)
	Max.	Min.	
REG2000 / EMI Filter Frame A			
RG-EF110A2	8 AWG (8.4 mm^2)	8 AWG (8.4 mm^2)	M4 14~16 kg-cm
RG-EF150A4		10 AWG (5.3 mm^2)	
REG2000 / EMI Filter Frame B			
RG-EF220A2	4 AWG (21.2 mm^2)	4 AWG (21.2 mm^2)	M5 30~34 kg-cm
RG-EF300A4		6 AWG (13.3 mm^2)	
REG2000 / EMI Filter Frame C			
RG-EF370A2	1/0 AWG (53.5 mm^2)	1/0 AWG (53.5 mm^2)	M6 60~69 kg-cm
RG-EF550A4		2 AWG (33.6 mm^2)	

※ Use only copper cable with ampacity of 600 V and temperature resistance of 75°C or 90°C.
※ RG-EF110A2 and RG-EF220A2 must use cable with temperature resistance of 90°C.

Dimensions - EMI Filter

Frame A

- RG-EF110A2
- RG-EF150A4

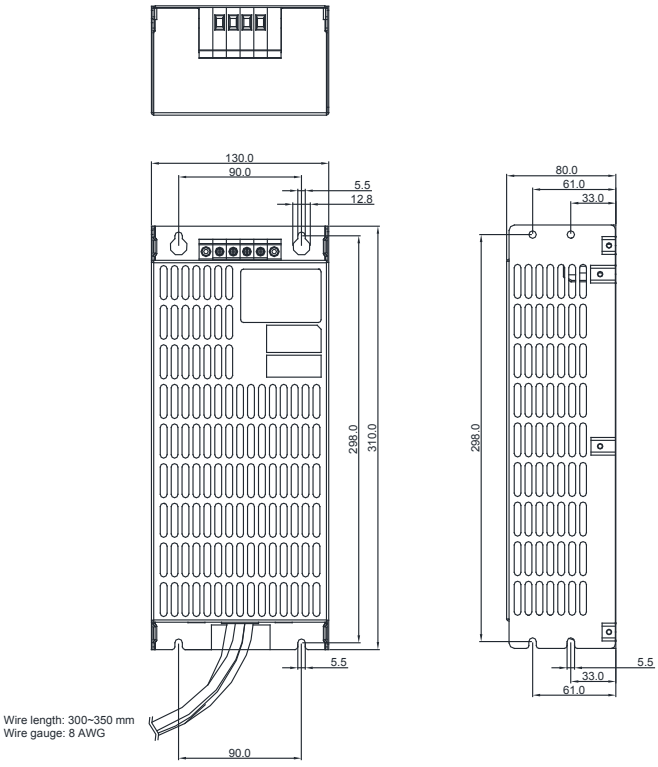

Frame B / C

- RG-EF220A2
- RG-EF370A2
- RG-EF300A4
- RG-EF550A4

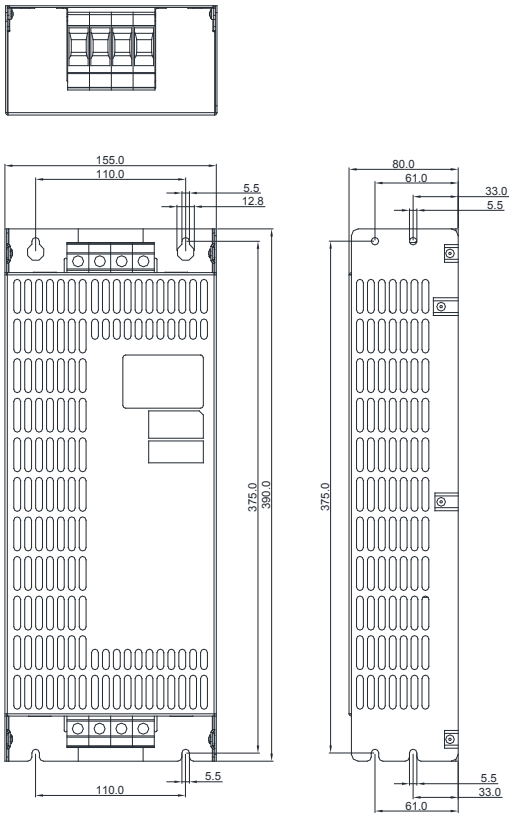

Unit：mm [inch]

※ Requires an additional terminal for 8 AWG cable. Suggested to apply O terminal for wiring according to application requirement.

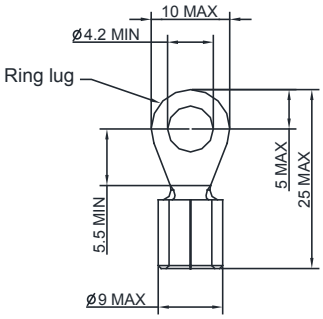

※ For insulation of over 600 V ampacity, apply heat shrink tube on the metal part of terminal to comply with UL standard.

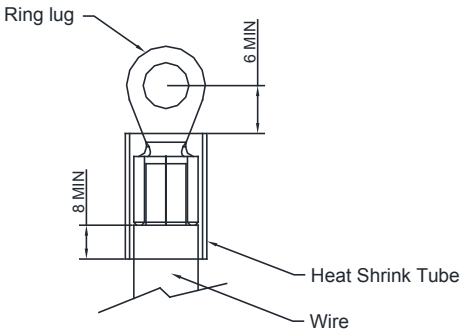

Accessories

KPC-CC01

- Highly illuminated LCD display
- Languages: Traditional Chinese, Simplified Chinese, English
- RJ45 Port

KPC-CE01

- 5-digit 7-segment LED Display
- RJ45 Port

Digital keypad accessories: RJ45 extension leads

Title	Part No.	Length	
		mm	inch
1	UC-CMC003-01A	300	11.8
2	UC-CMC005-01A	500	19.6
3	UC-CMC010-01A	1000	39
4	UC-CMC015-01A	1500	59
5	UC-CMC020-01A	2000	78.7
6	UC-CMC030-01A	3000	118.1
7	UC-CMC050-01A	5000	196.8
8	UC-CMC100-01A	10000	393.7
9	UC-CMC200-01A	20000	787.4

Delta AC Motor Drives for the REG2000

Delta AC Motor Drives:

Delta Servo Drives: ASDA-A2, ASDA-B2, ASDA-A3, ASDA-B3

Smarter. Greener. Together.

Industrial Automation Headquarters

Taiwan: Delta Electronics, Inc.
Taoyuan Technology Center
No.18, Xinglong Rd., Taoyuan District,
Taoyuan City 33068, Taiwan
TEL: +886-3-362-6301 / FAX: +886-3-371-6301

Asia

China: Delta Electronics (Shanghai) Co., Ltd.
No.182 Minyu Rd., Pudong Shanghai, P.R.C.
Post code : 201209
TEL: +86-21-6872-3988 / FAX: +86-21-6872-3996
Customer Service: 400-820-9595

Japan: Delta Electronics (Japan), Inc.
Industrial Automation Sales Department
2-1-14 Shibadaimon, Minato-ku
Tokyo, Japan 105-0012
TEL: +81-3-5733-1155 / FAX: +81-3-5733-1255

Korea: Delta Electronics (Korea), Inc.
1511, 219, Gasan Digital 1-Ro., Geumcheon-gu,
Seoul, 08501 South Korea
TEL: +82-2-515-5305 / FAX: +82-2-515-5302

Singapore: Delta Energy Systems (Singapore) Pte Ltd.
4 Kaki Bukit Avenue 1, #05-04, Singapore 417939
TEL: +65-6747-5155 / FAX: +65-6744-9228

India: Delta Electronics (India) Pvt. Ltd.
Plot No.43, Sector 35, HSIIDC Gurgaon,
PIN 122001, Haryana, India
TEL: +91-124-4874900 / FAX: +91-124-4874945

Thailand: Delta Electronics (Thailand) PCL.
909 Soi 9, Moo 4, Bangpoo Industrial Estate (E.P.Z),
Pattana 1 Rd., T.Phraksa, A.Muang,
Samutprakarn 10280, Thailand
TEL: +66-2709-2800 / FAX: +66-2709-2827

Australia: Delta Electronics (Australia) Pty Ltd.
Unit 20-21/45 Normanby Rd., Notting Hill Vic 3168, Australia
TEL: +61-3-9543-3720

Americas

USA: Delta Electronics (Americas) Ltd.
5101 Davis Drive, Research Triangle Park, NC 27709, U.S.A.
TEL: +1-919-767-3813 / FAX: +1-919-767-3969

Brazil: Delta Electronics Brazil
Rua Itapeva, 26 - 3°, andar Edificio Itapeva,
One - Bela Vista 01332-000 - São Paulo - SP - Brazil
TEL: +55-12-3932-2300 / FAX: +55-12-3932-237

Mexico: Delta Electronics International Mexico S.A. de C.V.
Gustavo Baz No. 309 Edificio E PB 103
Colonia La Loma, CP 54060
Tlalnepantla, Estado de México
TEL: +52-55-3603-9200

EMEA

EMEA Headquarters: Delta Electronics (Netherlands) B.V.
Sales: Sales.IA.EMEA@deltaww.com
Marketing: Marketing.IA.EMEA@deltaww.com
Technical Support: iatechnicalsupport@deltaww.com
Customer Support: Customer-Support@deltaww.com
Service: Service.IA.emea@deltaww.com
TEL: +31(0)40 800 3900

BENELUX: Delta Electronics (Netherlands) B.V.
De Witbogt 20, 5652 AG Eindhoven, The Netherlands
Mail: Sales.IA.Benelux@deltaww.com
TEL: +31(0)40 800 3900

DACH: Delta Electronics (Netherlands) B.V.
Coesterweg 45, D-59494 Soest, Germany
Mail: Sales.IA.DACH@deltaww.com
TEL: +49(0)2921 987 0

France: Delta Electronics (France) S.A.
ZI du bois Challand 2, 15 rue des Pyrénées,
Lisses, 91090 Evry Cedex, France
Mail: Sales.IA.FR@deltaww.com
TEL: +33(0)1 69 77 82 60

Iberia: Delta Electronics Solutions (Spain) S.L.U
Ctra. De Villaverde a Vallecas, 265 1º Dcha Ed.
Hormigueras – P.I. de Vallecas 28031 Madrid
TEL: +34(0)91 223 74 20

Carrer Llacuna 166, 08018 Barcelona, Spain
Mail: Sales.IA.Iberia@deltaww.com

Italy: Delta Electronics (Italy) S.r.l.
Via Meda 2–22060 Novedrate(CO)
Piazza Grazioli 18 00186 Roma Italy
Mail: Sales.IA.Italy@deltaww.com
TEL: +39 039 8900365

Russia: Delta Energy System LLC
Vereyskaya Plaza II, office 112 Vereyskaya str.
17 121357 Moscow Russia
Mail: Sales.IA.RU@deltaww.com
TEL: +7 495 644 3240

Turkey: Delta Greentech Elektronik San. Ltd. Sti. (Turkey)
Şerifali Mah. Hendem Cad. Kule Sok. No:16-A
34775 Ümraniye – İstanbul
Mail: Sales.IA.Turkey@deltaww.com
TEL: + 90 216 499 9910

MEA: Eltek Dubai (Eltek MEA DMCC)
OFFICE 2504, 25th Floor, Saba Tower 1,
Jumeirah Lakes Towers, Dubai, UAE
Mail: Sales.IA.MEA@deltaww.com
TEL: +971(0)4 2690148

*We reserve the right to change the information in this catalogue without prior notice.

DELTA_ IA-PQ_REG2000_C_EN_20210607