SICK.COM

DATA SHEET

WT150-P460

W150
Photoelectric sensors

SICK Sensor Intelligence

Illustration may differ

PHOTOELECTRIC SENSORS

WT150-P460

ORDERING INFORMATION

Type	part no.
WT150-P460	6011050

Further device versions and accessories at www.sick.com/W150

DETAILED TECHNICAL DATA

FEATURES

Functional principle	Photoelectric proximity sensor
Functional principle detail	Background suppression
Dimensions (W x H x D)	10 mm x 28 mm x 18 mm
Housing design (light emission)	Rectangular
Sensing range max.	2 mm ... 100 mm [1]
Focus	Approx. 5°
Type of light	Visible red light
Light source	LED [2]
Angle of dispersion	Approx. 5°
Adjustment	Potentiometer, 5 turns

[1] Object with 90% remission (based on standard white, DIN 5033).

[2] Average service life: 100,000 h at T_u = +25 °C.

MECHANICS/ELECTRONICS

Supply voltage U_B	10 V DC ... 30 V DC [1]
Ripple	± 10 % [2]
Current consumption	20 mA [3]
Switching output	PNP
Switching mode	Light/dark switching
Switching mode selector	Selectable via L/D control cable
Output current $I_{max.}$	≤ 100 mA
Response time	≤ 0.5 ms [4]
Switching frequency	1,000 Hz [5]
Connection type	Male connector M8, 4-pin
Circuit protection	A [6] B [7] C [8] D [9]
Protection class	II
Weight	7 g
Housing material	Plastic, ABS
Optics material	Plastic, PC
Enclosure rating	IP67
Items supplied	BEF-W150-A mounting bracket
Ambient operating temperature	–25 °C ... +55 °C
Ambient temperature, storage	–40 °C ... +75 °C
UL File No.	NRNT2.E128350 & NRNT8.E128350

[1] Limit values.

[2] May not fall below or exceed U_V tolerances.

[3] Without load.

[4] Signal transit time with resistive load.

[5] With light/dark ratio 1:1.

[6] A = V_S connections reverse-polarity protected.

[7] B = inputs and output reverse-polarity protected.

[8] C = interference suppression.

[9] D = outputs overcurrent and short-circuit protected.

SAFETY-RELATED PARAMETERS

$MTTF_D$	1,686 years
DC_{avg}	0 %

CERTIFICATES

EU declaration of conformity	✓
UK declaration of conformity	✓
ACMA declaration of conformity	✓
Moroccan declaration of conformity	✓
China RoHS	✓
China Compulsory Product Certification (CCC) exempt	✓

cRUus certificate	✓
Photobiological safety (DIN EN 62471) certificate	✓

ADJUSTMENTS

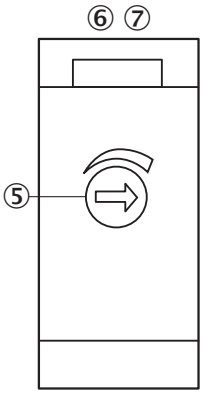

⑤ Sensing range adjustment: potentiometer, 5 turns
⑥ LED indicator green: stability indicator
⑦ LED indicator orange: output active

CONNECTION TYPE

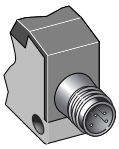

CONNECTION DIAGRAM CD-087

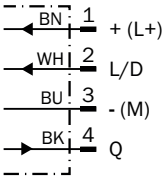

CHARACTERISTIC CURVE

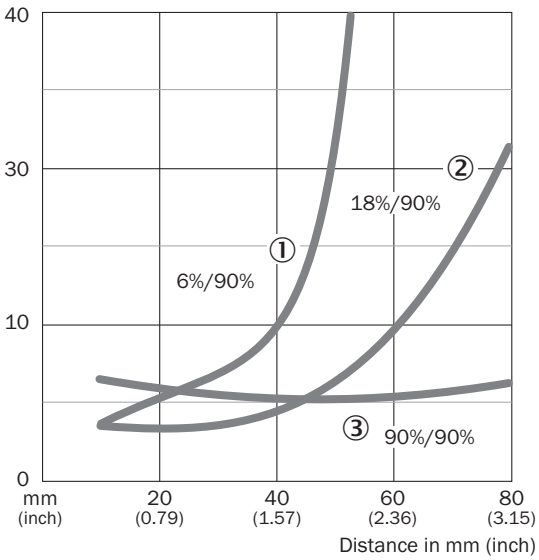

SENSING RANGE DIAGRAM

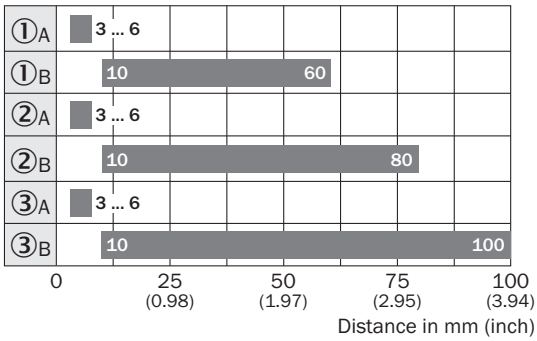

Sensing range

① Sensing range on black [12]/white background
② Sensing range on gray [12]/white background
③ Sensing range on white [12]/white background
A Sensing range control set to MIN
B Sensing range control set to MAX

DIMENSIONAL DRAWING

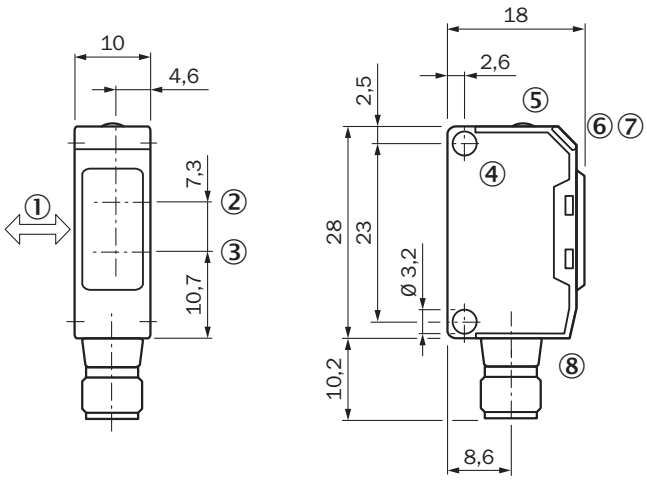

Dimensions in mm (inch)
① Standard direction of the material being detected
② Center of optical axis, receiver
③ Center of optical axis, sender
④ Mounting hole, ø approx. 3.1 mm
⑤ Sensing range adjustment: potentiometer, 5 turns
⑥ LED indicator green: stability indicator
⑦ LED indicator orange: output active
⑧ Connection

Further information as well as suitable accessories, example applications and downloads such as CAD dimensional models, operating instructions and software can be found at www.sick.com/6011050

SICK AG
WALDKIRCH
GERMANY
SICK.COM

SICK AT A GLANCE

SICK is a leading global technology company for intelligent sensors and integrated solutions in industrial automation. Our technologies set benchmarks, making your industrial processes more efficient, safer and more sustainable – both in logistics and manufacturing operations.

SICK combines sensor intelligence with industry expertise and certified consulting services. We provide the ideal foundation for scalable as well as tailor-made automation solutions and create added value along the entire value chain. Our close partnerships with our customers are more than just a promise: Together, we optimize productivity, improve quality, protect health and safety, and help build a sustainable future. All with empathy and trust.

Since 1946, we have been developing innovative technologies with passion and a pioneering spirit. With a global network in around 40 countries, SICK has a global presence and is always close by. The company's headquarters are located in Waldkirch near Freiburg, Germany. Our customers benefit from our understanding of both local and global requirements, which enables us to deliver tailor-made solutions

SICK
Sensor Intelligence