SICK.COM

DATA SHEET

GRL18-P2432

GR18
Photoelectric sensors

SICK Sensor Intelligence

Illustration may differ

PHOTOELECTRIC SENSORS

GRL18-P2432

ORDERING INFORMATION

Type	part no.
GRL18-P2432	1066557

Further device versions and accessories at www.sick.com/GR18

DETAILED TECHNICAL DATA

FEATURES

Functional principle	Photoelectric retro-reflective sensor
Functional principle detail	With minimum distance to reflector (dual lens system)
Dimensions (W x H x D)	18 mm x 18 mm x 73.5 mm
Housing design (light emission)	Cylindrical
Thread diameter (housing)	M18 x 1
Optical axis	Axial
Sensing range max.	0.03 m ... 7.2 m [1]
Sensing range	0.06 m ... 6 m [1]
Type of light	Visible red light
Light source	PinPoint LED [2]
Light spot size (distance)	Ø 175 mm (7 m)
Wave length	650 nm
Adjustment	Potentiometer
Display	
LED green	Operating indicator Static on: power on
LED yellow	Status of received light beam Static on: object not present Static off: object present

[1] Reflector PL80A.

[2] Average service life: 100,000 h at T_U = +25 °C.

MECHANICS/ELECTRONICS

Supply voltage U_B	10 V DC ... 30 V DC [1]
Ripple	< 5 V_{pp} [2]
Current consumption	30 mA
Switching output	PNP
Output function	Complementary
Switching mode	Light/dark switching
Signal voltage PNP HIGH/LOW	V_S - (≤ 3 V) / approx. 0 V
Output current $I_{max.}$	≤ 100 mA [3]
Response time	< 500 µs [4]
Switching frequency	1,000 Hz [5]
Connection type	Male connector M12, 4-pin
Circuit protection	A [6] B [7] D [8]
Protection class	III
Polarisation filter	✓
Housing material	Metal, Nickel-plated brass and ABS
Optics material	Plastic, PMMA
Enclosure rating	IP67
Items supplied	Fastening nuts (2 x)
Electromagnetic compatibility (EMC)	EN 60947-5-2
Ambient operating temperature	–25 °C ... +55 °C [9]
Ambient temperature, storage	–40 °C ... +70 °C
UL File No.	E348498

[1] Limit values. Operated in short-circuit protected network: max. 8 A.

[2] May not fall below or exceed U_v tolerances.

[3] At Uv > 24 V or ambient temperature > 49 °C, IA max. = 50 mA.

[4] Signal transit time with resistive load.

[5] With light/dark ratio 1:1.

[6] A = V_s connections reverse-polarity protected.

[7] B = inputs and output reverse-polarity protected.

[8] D = outputs overcurrent and short-circuit protected.

[9] At U_v <=24V and I_A<50mA.

SAFETY-RELATED PARAMETERS

$MTTF_D$	1,672 years
DC_{avg}	0 %

CERTIFICATES

EU declaration of conformity	✓
UK declaration of conformity	✓
ACMA declaration of conformity	✓
Moroccan declaration of conformity	✓
China RoHS	✓

China Compulsory Product Certification (CCC) exempt	✓
ECOLAB certificate	✓
cULus certificate	✓
Photobiological safety (DIN EN 62471) certificate	✓

ADJUSTMENTS GRL18(S), GRSE18(S), SENSITIVITY SETTING: POTENTIOMETER, 270°

CONNECTION DIAGRAM CD-084

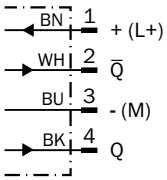

CHARACTERISTIC CURVE GRL18S

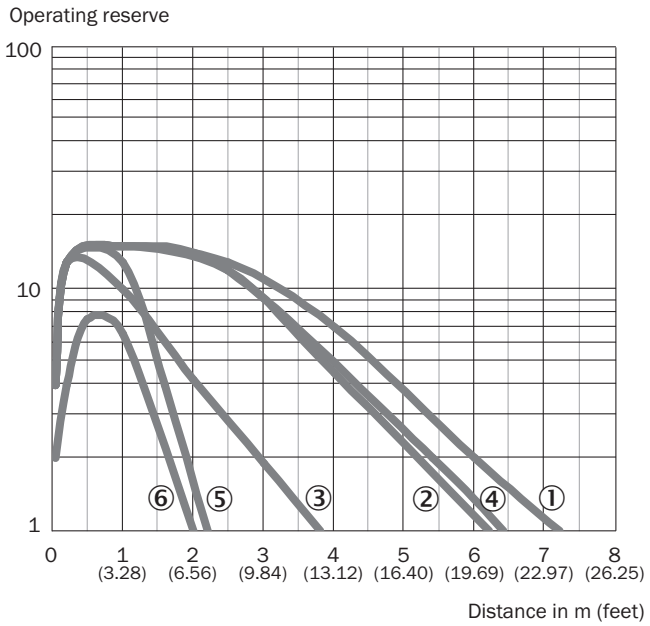

① Reflector PL80A
② Reflector PL40A
③ Reflector PL20A
④ Reflector P250
⑤ Reflector PL22
⑥ Reflective tape REF-Plus 3436

LIGHT SPOT SIZE GRL18S

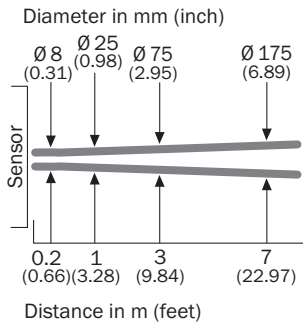

SENSING RANGE DIAGRAM GRL18S

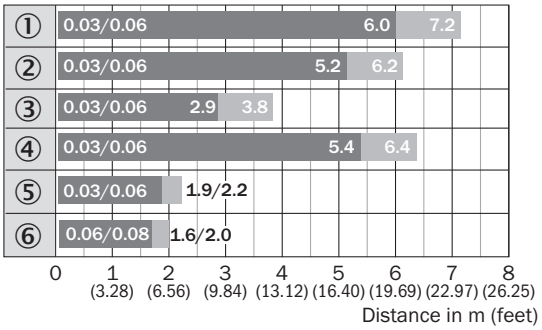

Sensing range Sensing range max.

① Reflector PL80A
② Reflector PL40A
③ Reflector PL20A
④ Reflector P250
⑤ Reflector PL22
⑥ Reflective tape REF-Plus 3436

RESPONSE RANGE GRL18S

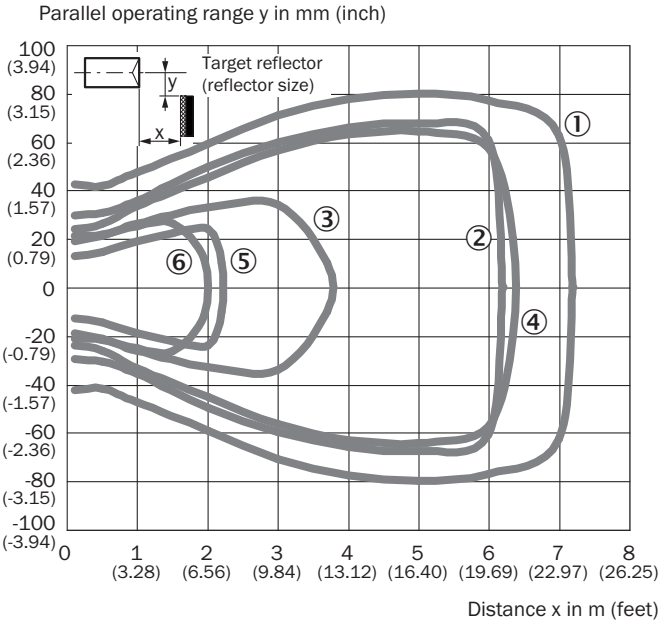

① Reflector PL80A
② Reflector PL40A
③ Reflector PL20A
④ Reflector P250
⑤ Reflector PL22
⑥ Reflective tape REF-Plus 3436

DIMENSIONAL DRAWING GRTE18, GRL18, GRSE18, METAL, CONNECTOR, STRAIGHT

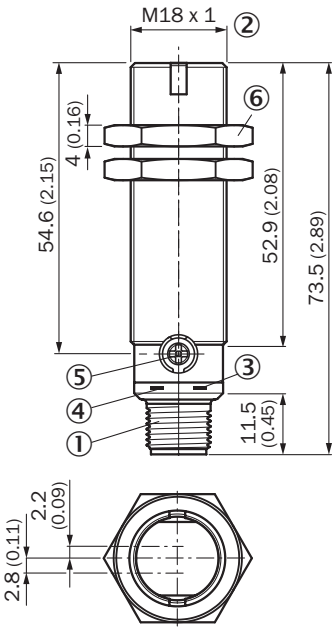

Dimensions in mm (inch)
① male connector M12, 4-pin
② Threaded mounting hole M18 x 1
③ LED indicator yellow
④ LED indicator green
⑤ sensitivity control: potentiometer 270°
⑥ Fastening nuts (2x); width across 24, metal

Further information as well as suitable accessories, example applications and downloads such as CAD dimensional models, operating instructions and software can be found at www.sick.com/1066557

SICK AG
WALDKIRCH
GERMANY
SICK.COM

SICK AT A GLANCE

SICK is a leading global technology company for intelligent sensors and integrated solutions in industrial automation. Our technologies set benchmarks, making your industrial processes more efficient, safer and more sustainable – both in logistics and manufacturing operations.

SICK combines sensor intelligence with industry expertise and certified consulting services. We provide the ideal foundation for scalable as well as tailor-made automation solutions and create added value along the entire value chain. Our close partnerships with our customers are more than just a promise: Together, we optimize productivity, improve quality, protect health and safety, and help build a sustainable future. All with empathy and trust.

Since 1946, we have been developing innovative technologies with passion and a pioneering spirit. With a global network in around 40 countries, SICK has a global presence and is always close by. The company's headquarters are located in Waldkirch near Freiburg, Germany. Our customers benefit from our understanding of both local and global requirements, which enables us to deliver tailor-made solutions

SICK
Sensor Intelligence