EVNL-...-40

- Zone 2, 21, 22
- Replaces traditional discharge lamps exceeding 400W
- Savings on energy costs, maintenance and installation
- Immediate high-intensity activation
- IK10
- 5 years warranty

Ex casing and terminal holder for quick connection

CORTEM® GROUP

EVNL series LED floodlights for zone 2, 21, 22

EVNL-...-40 series LED floodlights are suitable for plants in zone 2 and zone 21,22. The advantage of the EVNL-...-40 floodlights is the implementation of the "Ex nR" method of protection which classifies the equipment as a restricted breathing device. The careful design together with the meticulous choice of materials to seal the lighting fixture limits the entry of flammable gases, vapours or mists during normal operation of the floodlight.
The body, made of aluminium alloy, is equipped with fins that act as a heat sink allowing a fast and effective dispersion of heat generated by the normal operation of the LED plate. Furthermore, the geometric structure of the cooling fins has been designed to minimise the deposits of combustible dust and allow air or water present in the surrounding area to exert a cleaning action on the floodlights, an entry point with an opposing plug allows the in/out connection for connecting multiple lighting bodies onto one single power line.

Sectors for use:

Petroleum refineries | Chemical and petrochemical plants | Anti-light pollution | Offshore plants | Onshore plants | Lighting of perimeter zones | Petroleum loading/ unloading pontoons | 100% produced by Cortem

CERTIFICATION DATA

Classification:	Group II	Group 2D/3G		
Installation: EN 60079.14	zone 2 (Gas)	zone 21, 22 (Dust)		
Execution:	CE 0722 Ex II 2D Ex tb IIIC T... °C Db IP 66			zone 21,22
Certificate:	CE Ex II 3G Ex nR IIC T... °C Gc			zone 2
	ATEX EPTI 20 ATEX 0389X		zone 21,22	
	ATEX EPT 20 ATEX 4087X		zone 2	
	IEC Ex IECEx EUT 20.0025X		For all IEC Ex certification data, download the certificate from www.cortemgroup.com	

Standard:
CENELEC EN 60079-0: 2018, EN 60079-15: 2010, EN 60079-31: 2014 and EUROPEAN DIRECTIVE 2014/34/UE
IEC 60079-0: 2017, IEC 60079-15: 2010, IEC 60079-31: 2013
European Directive 2004/108 Electromagnetic compatibility
European Directive 2012/19/UE, 2002/96/CE, 2003/108/CE WEEE
European Directive 2011/65/UE RoHS

Temperature class: -60°C* +60°C

Protection rating: IP66

EVNL series LED floodlights for zone 2, 21, 22

EXEMPT FROM PHOTOBIOLOGICAL RISK (STANDARD IEC / EN 62471)

ORIGINAL PRODUCT

MECHANICAL CHARACTERISTICS

Body:	Aluminium alloy with low copper content. With cooling fins for high levels of heat dissipation.
Transparent front cover:	High temperature and shock resistant tempered glass
Gasket:	Acid, hydrocarbon and high temperature resistant
Fastening bracket:	Stainless steel
Screws:	Stainless steel
Entry points:	2 ISO M20 entry points fixture complete with a PLG1ILXE7 plug and NAV20SIB cable gland
Coating:	Polyester RAL 7035 (Light grey)
Corrosion Resistance:	The STANDARD of the aluminium alloy used by Cortem has passed the tests required by the Standard EN60068-2-30 (hot-humid cycles) and EN60068-2-11 (salt fog test)

EXPLODED VIEW OF FLOODLIGHT EVNL-...-40

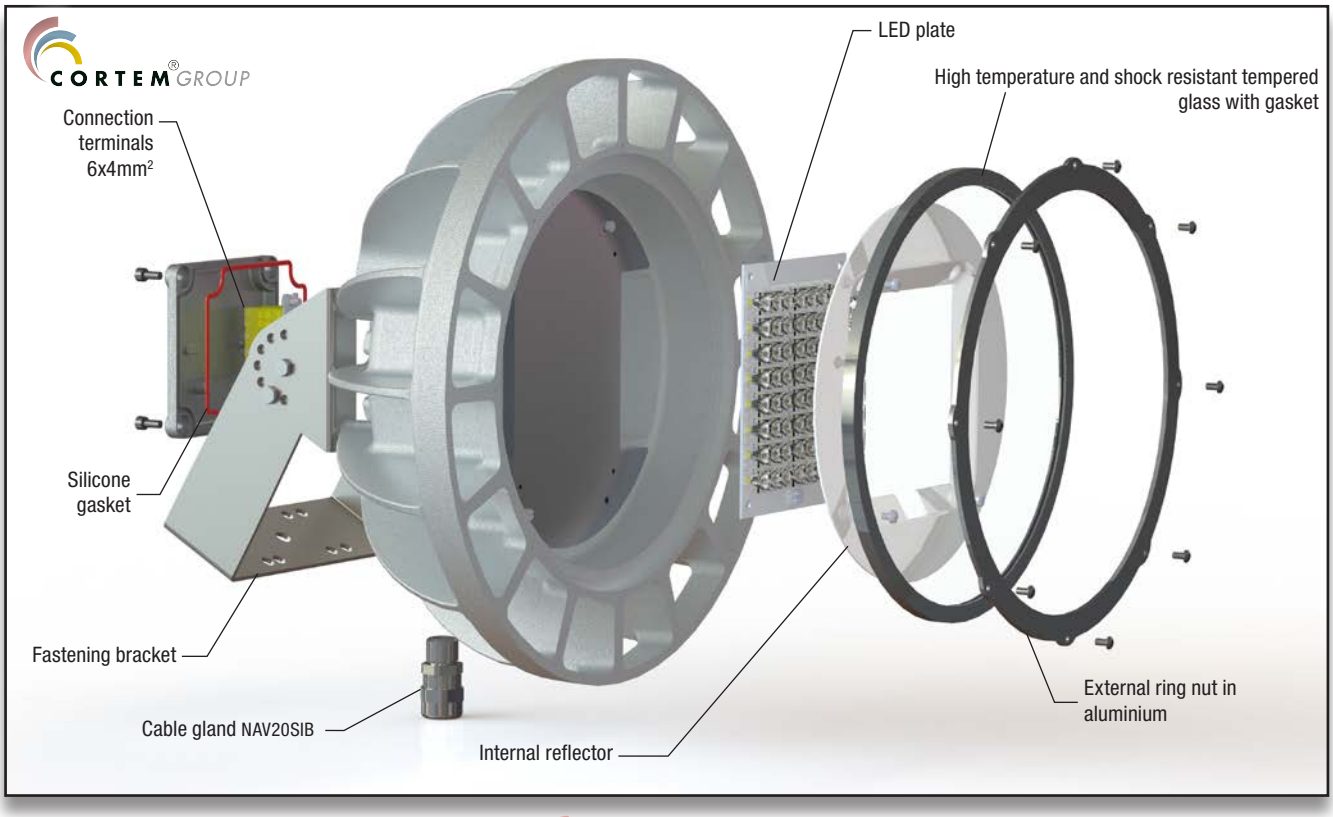

EVNL-.../40 series selection chart

Code	Rated power value	Class / Max surface temp. °C			Lumen	Maximum light intensity	Overall efficiency	Weight kg	mm
		TA=+40°C	TA=+50°C	TA=+60°C					
EVNL-060040-40	40 W	T6 / 85°C	T5 / 100°C	T4 / 135°C	4598 lm	9518 cd	112 lm/W	2,5	215x205x170
EVNL-060050-40	50 W	T5 / 100°C	N/A	N/A	4986 lm	10321 cd	106 lm/W	2,5	215x205x170
EVNL-070050-40	50 W	T4 / 135°C	T4 / 135°C	T4 / 135°C	6489 lm	13432 cd	122 lm/W	3,3	250x235x165
EVNL-070060-40	60 W	T4 / 135°C	T4 / 135°C	T4 / 135°C	7594 lm	15720 cd	120 lm/W	3,3	250x235x165
EVNL-070070-40	70 W	T4 / 135°C	N/A	N/A	8102 lm	16771 cd	113 lm/W	3,3	250x235x165
EVNL-070080-40	80 W	T4 / 135°C	N/A	N/A	9081 lm	18799 cd	114 lm/W	3,3	250x235x165
EVNL-080080-40	80 W	T5 / 100°C	T4 / 135°C	T4 / 135°C	10923 lm	22612 cd	130 lm/W	4,3	290x290x170
EVNL-080090-40	90 W	T4 / 135°C	T4 / 135°C	T4 / 135°C	11775 lm	24374 cd	126 lm/W	4,3	290x290x170
EVNL-080100-40	100 W	T4 / 135°C	N/A	N/A	12509 lm	25896 cd	117 lm/W	4,3	290x290x170
EVNL-080120-40	120 W	T4 / 135°C	N/A	N/A	13719 lm	28400 cd	111 lm/W	4,3	290x290x170
EVNL-100140-40	140 W	T4 / 135°C	T4 / 135°C	T4 / 135°C	15532 lm	32153 cd	108 lm/W	9,2	385x385x250
EVNL-100160-40	160 W	T4 / 135°C	T4 / 135°C	T4 / 135°C	20466 lm	42367 cd	122 lm/W	9,2	385x385x250
EVNL-100180-40	180 W	T4 / 135°C	T4 / 135°C	T4 / 135°C	21378 lm	44255 cd	118 lm/W	9,2	385x385x250
EVNL-100200-40	200 W	T4 / 135°C	N/A	N/A	23828 lm	49327 cd	116 lm/W	9,2	385x385x250
EVNL-100220-40	220 W	T4 / 135°C	N/A	N/A	24542 lm	50803 cd	113 lm/W	9,2	385x385x250

Dimensional drawing

EVNL-060...-40

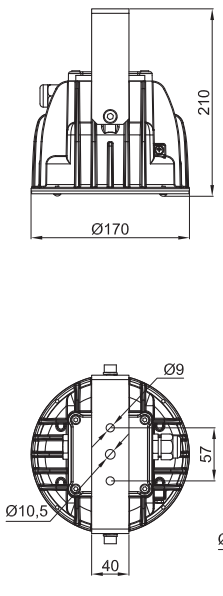

EVNL-070...-40

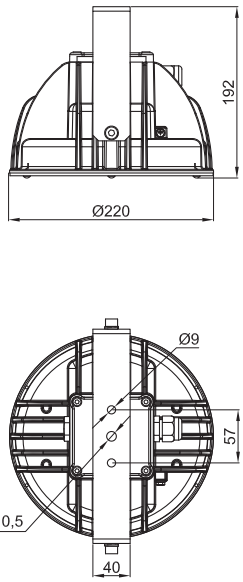

EVNL-080...-40

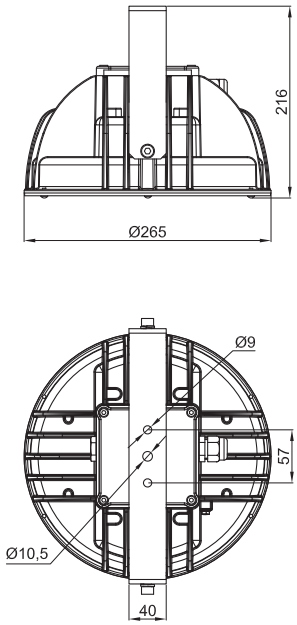

EVNL-100...-40

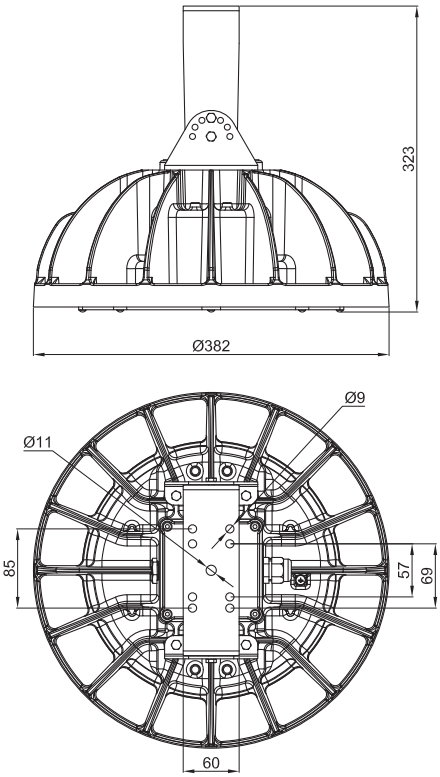

Dimensions in mm

EVNL series LED floodlights for zone 2, 21, 22

Electrical features	EVNL-060..	EVNL-070..	EVNL-080..	EVNL-100..
Power supply:	120-277 Vac	120-277 Vac	120-277 Vac	120-277 Vac
Rated frequency:	50-60 Hz ±5%	50-60 Hz ±5%	50-60 Hz ±5%	50-60 Hz ±5%
Power consumption*:	**..040** 40 W	**..050** 50 W	**..080** 80 W	**..140** 140 W
	..050 50 W	**..060** 60 W	**..090** 90 W	**..160** 160 W
	-	**..070** 70 W	**..100** 100 W	**..180** 180 W
	-	**..080** 80 W	**..120** 120 W	**..200** 200 W
	-	-	-	**..220** 220 W
Connection:	Direct connection to terminal board L, N, Pe. Section 4mm², suitable for loop-in/loop-out			
Power factor:	>0,93	>0,95	>0,97	>0,96
Rated current:	**..030** 140 mA	**..050** 230 mA	**..080** 350 mA	**..140** 640 mA
	..040 180 mA	**..060** 270 mA	**..090** 400 mA	**..160** 710 mA
	..050 220 mA	**..070** 310 mA	**..100** 440 mA	**..180** 800 mA
	-	**..080** 360 mA	**..120** 530 mA	**..220** 970 mA
EMC (electromagnetic compatibility):	EN 55015, EN 61547, IEC 61000-3-2, IEC 61000-3-3, IEC 61000-4-...			
THD (total harmonic distortion):	<10%			
Over-voltage protection:	4 kV	4 kV	4 kV	4 kV
Driver performances:	Over-Voltage protection, Over-Current protection, Short-Circuit protection			
Dimmer (on request):	(0-10 V) or PWM or resistor	(0-10 V) or PWM or resistor	(0-10 V) or PWM or resistor	(0-10 V) or PWM or resistor
Photometric features				
LED Multichip:	High power LED	High power LED	High power LED	High power LED
Viewing angle:	40°	40°	40°	40°
Colour temperature:	5700 K	5700 K	5700 K	5700 K
CRI:	>70	>70	>70	>70
Instant Restrike:	YES	YES	YES	YES
L90:	> 145000 h	> 145000 h	> 145000 h	> 145000 h

* *Test at 230Vac*

ACCESSORIES AVAILABLE / SPECIAL REQUESTS

CRI values higher
Dimmer
Different colour temperature
U bolt for pole mounting
Eyebolt
Cover with direct connection for pole
Additional NAV20SIB cable gland for unarmoured cable

EVNL series LED floodlights for zone 2, 21, 22

ILLUSTRATION	DESCRIPTION	MODEL	CHARACTERISTICS	CODE	KEY
	Suspended eye bolt	Ø interno 20	Material: galvanized steel	**G0F-8**	ACCESSORY, SPARE PART
	U-bolt for pole assembly	per pali Ø1 1/2"	Material: stainless steel AISI 316L	**UBD5S**	ACCESSORY, SPARE PART
	Fastening bracket	EVNL-060...-40	Material: stainless steel AISI 316L	**G-764IN**	SPARE PART
		EVNL-070...-40		**G-765IN**	
		EVNL-080...-40		**G-766IN**	
		EVNL-100...-40		**G-827**	
	Cable gland	ISO M20	std. range cable 6,3÷11,6	**NAV20SIB**	SPARE PART
	Electronic power unit	EVNL-060030-40	120-277 Vac	**LEDDEVL060/2**	SPARE PART
		EVNL-060040-40		**LEDDEVL060/2/1**	
		EVNL-060050-40		**LEDDEVL060/2**	
		EVNL-070050-40	120-277 Vac	**LEDDEVL070/1**	
		EVNL-070060-40		**LEDDEVL070/1/2**	
		EVNL-070070-40		**LEDDEVL070/1/3**	
		EVNL-070080-40		**LEDDEVL080/4/1**	
		EVNL-080080-40	120-277 Vac	**LEDDEVL080/4/2**	
		EVNL-080090-40		**LEDDEVL080/4/3**	
		EVNL-080100-40		**LEDDEVL080/4/4**	
		EVNL-080120-40		**LEDDEVL080/5/2**	
		EVNL-100140-40	120-277 Vac	**LEDDEVL100/1/1**	
		EVNL-100160-40		**LEDDEVL100/1/5**	
		EVNL-100180-40		**LEDDEVL100/1/2**	
		EVNL-100200-40		**LEDDEVL100/1/3**	
		EVNL-100220-40		**LEDDEVL100/1/4**	
	Glass + gasket	EVNL-060...-40	Tempered front glass and black gasket	**G-831 + G-944**	SPARE PART
		EVNL-070...-40		**G-830 + G70-955**	
		EVNL-080...-40		**G-829 + G80-955**	
		EVNL-100...-40		**G-852 + G100-955**	

Stanchion mounting with fixed orientation at 25°

Direct connection to terminal board L, N, Pe.
Posible section 1.5mm² for loop-in/loop-out.
Input of 3 single cables up to 4mm², input-output with 6 single cables up to 1.5mm²
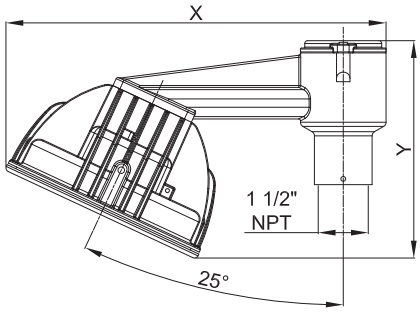
Code	X	Y	Peso kg	mm
EVNL-060...-40-IX	372	215	3,5	372x170x215
EVNL-070...-40-IX	395	226	4,1	372x327x226
EVNL-080...-40-IX	419	242	5,2	351x351x242
EVNL-100...-40-IX	478	280	9,9	412x412x280