EVML

- Zone 1, 2, 21, 22
- Excellent heat dissipation
- Saves in energy and high efficiency
- Suitable for low temperature
- Easy to install
- Small size

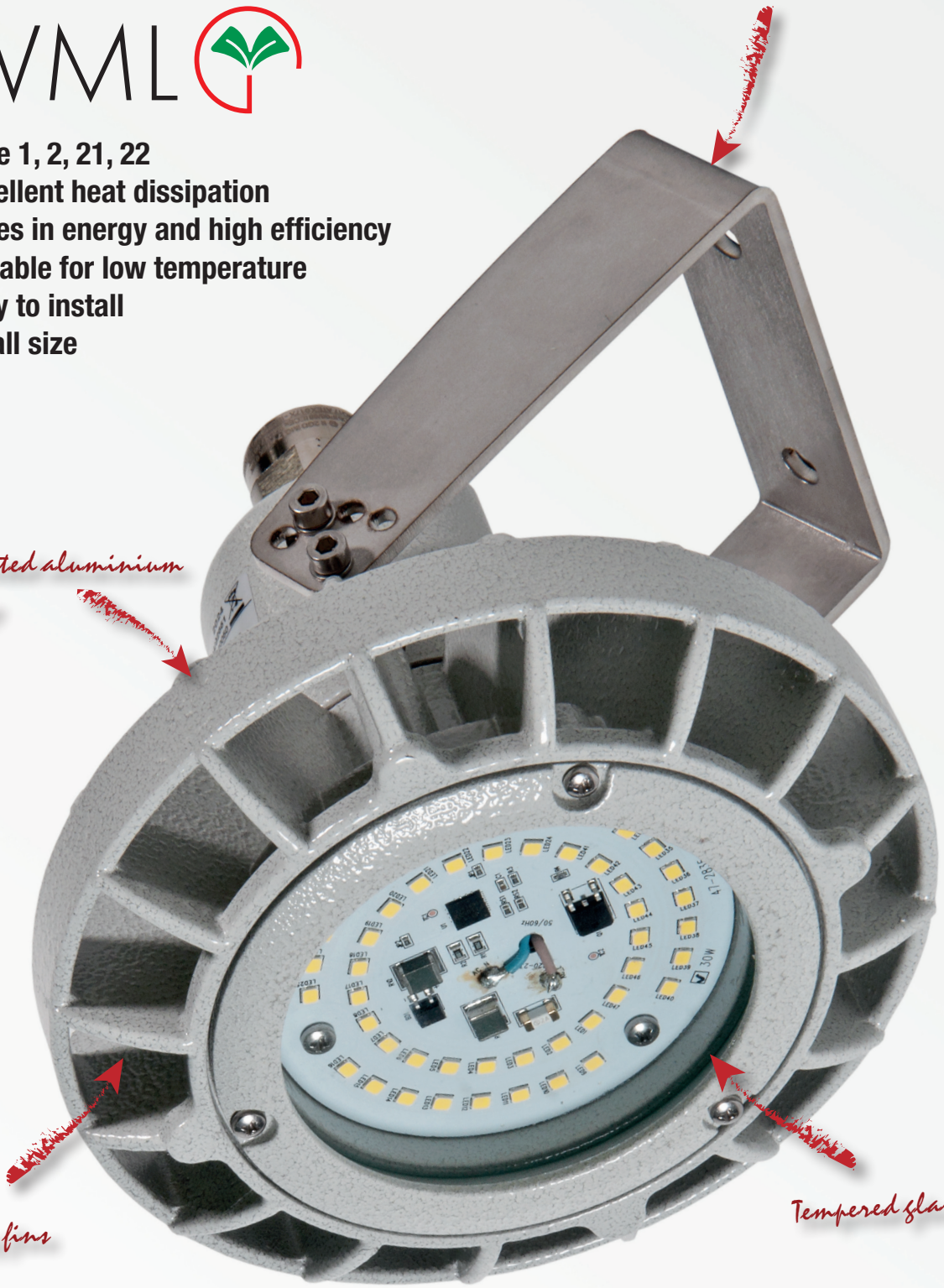

LED resin-bonded electronic board

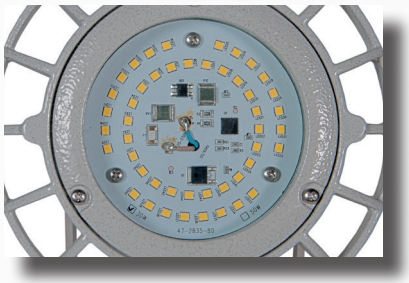

Orientable bracket detail

Lighting fixture with round windows detail

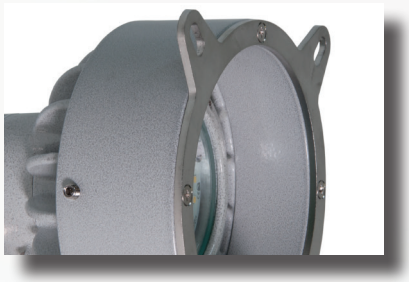

CORTEM GROUP®

EVML Low Bay LED lighting fixture

EVML lighting fixtures have been designed to offer a Low Bay lighting fixture that could replace incandescent equivalents with lower costs. They are suitable for the illumination of areas in which it's necessary to limit the obstruction such as tunnels, passages, corridors, stairways and command and control cabins (code EVML-ME-060...). They can also be used to illuminate and monitor hazardous materials contained inside tanks and cisterns thanks to a bracket for the coupling with the porthole flange (code EVML-ME-050...-O..). The model with the side entry meets, at last, some specific installation needs, reducing the overall dimensions (code EVML-ME-060...L).
The Low Bay LED lighting fixtures has been specifically designed to meet the technical requirements of LEDs. In effect, the body fins act as a heat dissipater for the LED plate meaning that more powerful lighting can be installed without causing any deterioration of the LEDs. The universal steel mounting bracket complies with all application requirements and it allows the directionality of the light and an easy installation at low heights in all those areas defined as dangerous for the presence of explosive gas and dust as Zone 1, 2, 21, 22. The protective flat glass is resistant to impact and high temperatures and ensures non polluting illumination to the surrounding environment.

Application sectors:

Oil refineries | Chemical and petrochemical plants | Anti light pollution | Offshore plants | Onshore plants | Perimeter lighting | Oil loading/ unloading jetties | Stairs Handrails

CERTIFICATION DATA

Classification:	Group II	Category 2GD		
Installation: EN 60079.14	zone 1 - zone 2 (Gas)	zone 21 - zone 22 (Dust)		
Marking:	CE 0722 Ex II 2GD Ex eb mb IIC T.. Gb - Ex tb IIIC T..°C Db IP66			
Certification:	ATEX CML 19 ATEX 3019X			
	IEC Ex IECEx CML 19.0003X	All IEC Ex and INMETRO certification data can be downloaded at www.cortemgroup.com		
	INMETRO AVAILABLE			
Standards:	CENELEC EN 60079-0: 2018, EN 60079-7: 2015-18, EN 60079-18: 2015-17, EN 60079-31: 2024 and EUROPEAN DIRECTIVE 2014/34/UE IEC 60079-0: 2017, IEC 60079-7: 2017, IEC 60079-18: 2014-17, IEC 60079-31: 2022 European Directive 2004/108 Electromagnetic compatibility European Directive 2012/19/UE, 2002/96/CE, 2003/108/CE WEEE European Directive 2011/65/UE RoHS			
Class temperature:	See selection table EVML			
Ambient temperature:	-60°C +40°C	-60°C +50°C	-60°C +60°C	
Degree of protection:	IP66			

EVML Low Bay LED lighting fixture

EVML-ME-060..

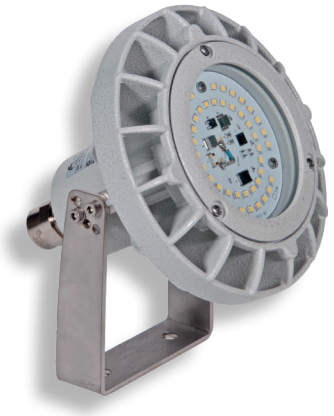

EVML-ME-060..L..

EVML-ME-050..O..

ORIGINAL PRODUCT

MECHANICAL FEATURES

Body:	Low copper content aluminium alloy fitted with cooling fins for better heat dissipation
Glass face:	Shock and temperature resistant tempered glass
Gaskets:	Acid, hydrocarbon and high temperature resistant silicone
Supporting brackets:	Stainless steel AISI 316L
Bolts and screws:	Stainless steel
Entries:	1 x ISO M16 entries. Fixture supplied with NAV16IB cable gland
Coating:	Polyester coating Ral 7035 (Light grey)
Corrosion Resistance:	The STANDARD of the aluminium alloy used by Cortem has passed the tests required by standards EN60068-2-30 (hot/humid cycles) and EN60068-2-11 (salt mist tests)

EXPLODED DIAGRAM OF EVML-ME-060.. LIGHTING FIXTURE

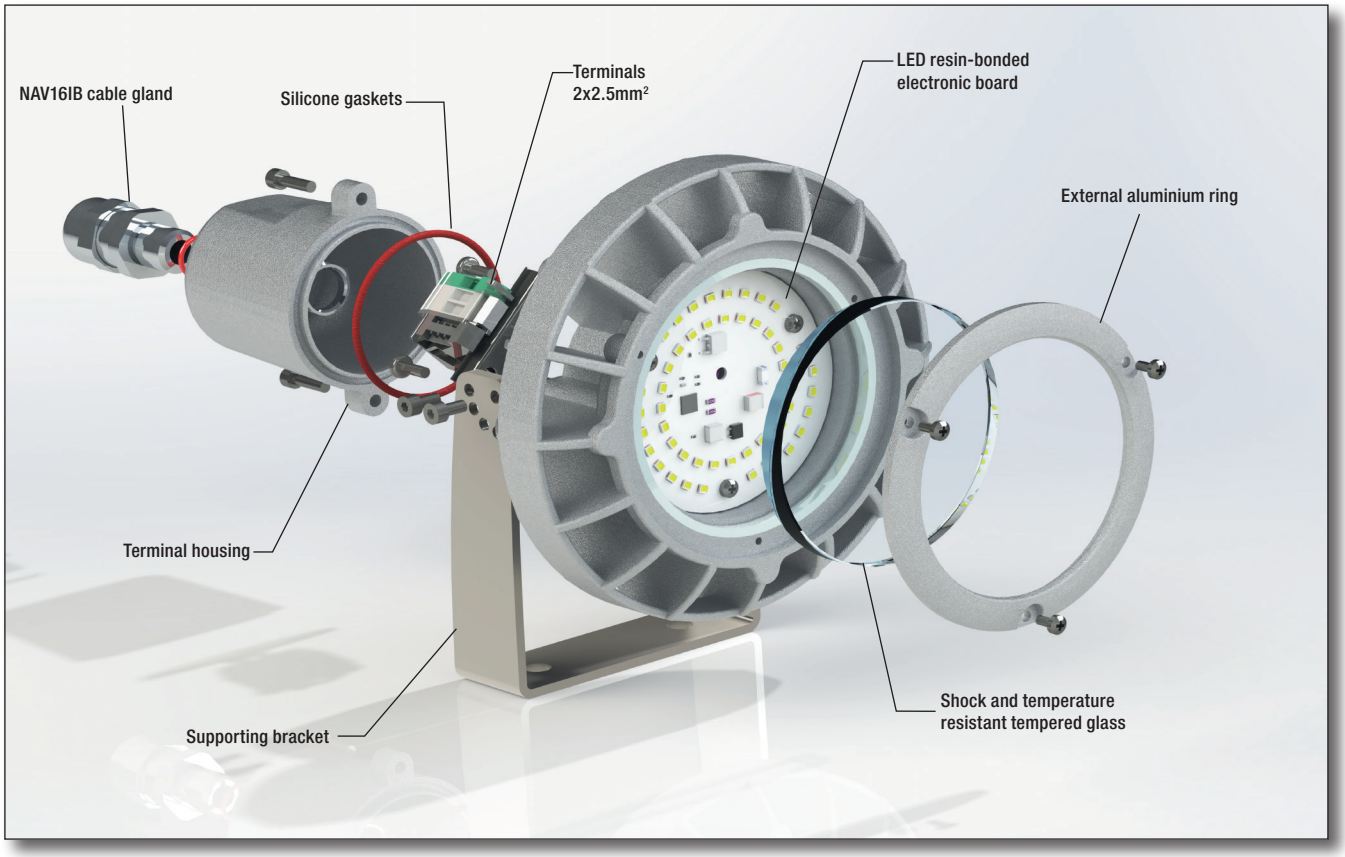

EVML-ME-060.. series selection chart

Code	Watt	Supply voltage	Class temperature			Weight kg	mm
			Ta <+40°C	Ta <+50°C	Ta <+60°C		
EVML-ME-060015	15 W	230 Vac	T4/95°C	T4/105°C	T4/115°C	1,2	180x170x170
EVML-ME-060015-12	15 W	12 Vac/dc	T6/66°C	T6/76°C	T5/86°C	1,2	180x170x170
EVML-ME-060015-24D	15 W	24 Vdc	T6/66°C	T6/76°C	T5/86°C	1,2	180x170x170
EVML-ME-060015-24A	15 W	24 Vac	T6/64°C	T6/74°C	T5/84°C	1,2	180x170x170
EVML-ME-060015-48D	15 W	48 Vdc	T5/81°C	T5/91°C	T4/101°C	1,2	180x170x170
EVML-ME-060015-48A	15 W	48 Vac	T6/77°C	T5/87°C	T4/97°C	1,2	180x170x170
EVML-ME-060015-110	15 W	110 Vac/dc	T6/64°C	T6/74°C	T5/84°C	1,2	180x170x170
EVML-ME-060030	30 W	230 Vac	T5/91°C	T4/101°C	T4/111°C	1,2	180x170x170
EVML-ME-060050	50 W	230 Vac	T5/91°C	T4/101°C	T4/111°C	1,2	180x170x170

DIMENSIONAL DRAWINGS

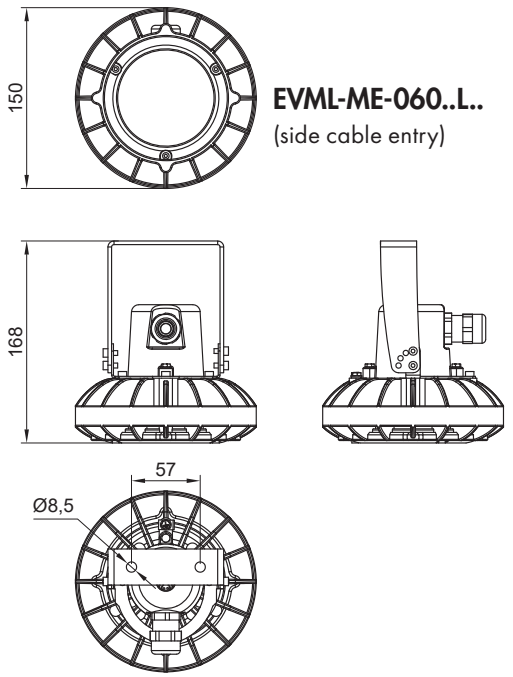

EVML-ME-060..L..
(side cable entry)

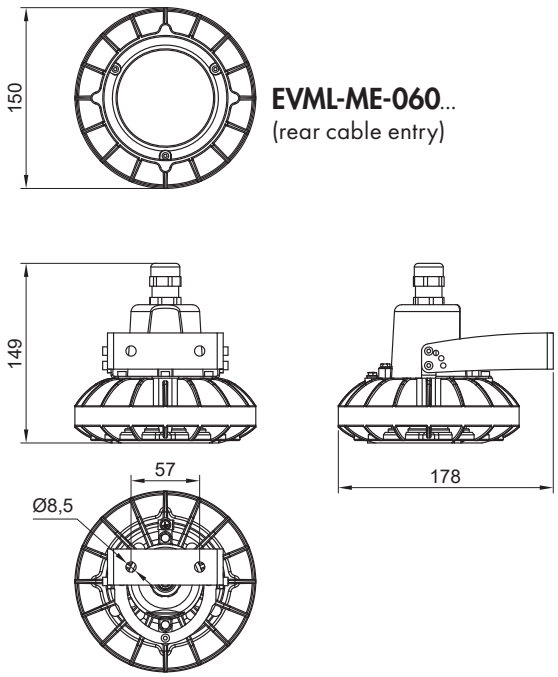

EVML-ME-060...
(rear cable entry)

EVML Low Bay LED lighting fixture

Electrical features	EVML-ME-060015 EVML-ME-050015..	EVML-ME-060030	EVML-ME-060050
Power supply:	230 Vac	230 Vac	230 Vac
Rated frequency:	50-60 Hz	50-60 Hz	50-60 Hz
Rated power:	15 W	30 W	50 W
Connection:	Direct connection to terminal board L, N, Pe. Section 2,5mm^2		
Power factor:	>0,95	>0,95	>0,95
Rated current:	0,07 A	0,13 A	0,23 A
EMC (electromagnetic compatibility):	EN 55015, EN 61547, IEC 61000-3-2, IEC 61000-3-3, IEC 61000-4-...		
THD (total harmonic distortion):	<25%	<25%	<25%
Over-voltage protection:	0,5 kV	1 kV	1 kV
Photometric features			
LED Multichip:	Mid power	Mid power	Mid power
Viewing angle:	120°	120°	120°
Colour temperature:	5000 K	5000 K	5000 K
CRI:	80	80	80
Instant Restrike:	YES	YES	YES
L70:	> 60.000 hours		
Lumen:	**1847 lm**	**2913 lm**	**4023 lm**
Maximum light intensity:	**749 cd**	**1234 cd**	**1705 cd**
Overall efficiency:	**124 lm/W**	**99 lm/W**	**78 lm/W**

ORDER CODE LOGIC

EVML-ME- ☐ ☐ ☐ ☐

EVML-ME- Fixed code

050 Dimensions for tank/vessel inspection, obstruction light and portable see p. A.25, p. A.26 e p. A.27
060 Dimensions for 15W, 30W, 50W and low voltage

Lighting fixture power
015 for 15W
030 for 30W (only 230Vac)
050 for 50W (only 230Vac)

Rated voltage
n.a. for 230 Vac
-110 110Vac/dc
-12 12Vac/dc
-24D 24Vdc
-24A 24Vac
-48D 48Vdc
-48A 48Vac
Only for 15W models

n.a. rear cable entry
L side cable entry

EVML LOW VOLTAGE

EVML-ME-060015...

Electrical features	...-12	...-24D	...-24A	...-48D	...-48A	...-110
Power supply:	12 Vac/dc	24 Vdc	24 Vac	48 Vdc	48 Vac	110Vac/dc
Rated frequency:	50-60 /0 Hz	0 Hz	50-60 Hz	0 Hz	50-60 Hz	50-60 Hz
Rated power:	15 W	15 W	15 W	15 W	15 W	12 W
Connection:	Direct connection to terminal board L, N, Pe. Section 2,5 mm^2					
Power factor:	>0,95	-	>0,95	-	>0,95	>0,96
Rated current:	1,47 A	630 mA	540 mA	307 mA	318 mA	100 mA
EMC (electromagnetic compatibility):	EN 55015, EN 61547, IEC 61000-3-2, IEC 61000-3-3, IEC 61000-4-...					
THD (total harmonic distortion):	<25%					
Over-voltage protection:	0,5 kV	0,5 kV	0,5 kV	0,5 kV	0,5 kV	0,5 kV
Photometric features						
LED Multichip:	Mid power	Mid power	Mid power	Mid power	Mid power	Mid power
Viewing angle:	120°	120°	120°	120°	120°	120°
Colour temperature:	5000 K	5000 K	5000 K	5000 K	5000 K	5000 K
CRI:	80	80	80	80	80	80
Instant Restrike:	YES	YES	YES	YES	YES	SI
Lumen:	**1365 lm (dc)**	**1458 lm**	**1092 lm**	**1361 lm**	**1256 lm**	**720 lm**
Maximum light intensity:	**565 cd (dc)**	**371 cd**	**368 cd**	**569 cd**	**373 cd**	**287 cd**
Overall efficiency:	**88 lm/W (dc)**	**97 lm/W**	**91 lm/W**	**96 lm/W**	**90 lm/W**	**60 lm/W**

ACCESSORIES AVAILABLE / SPECIAL REQUESTS

U bolt for pole mounting
Different colour temperature (code EVML-060....**-..K**)

EVML-ME-050015-..-O.. TANK/VESSEL INSPECTION LIGHTING FIXTURES

Code	Kmax	Kmin	ØAS	D	Ød	Round window acc. DIN28120
EVML-ME-050015-...-O10 ①	169	155	7	186	135	100
EVML-ME-050015-...-O12 ②	194	180	7	211	160	125
EVML-ME-050015-...-O15 ③	222	208	9	243	185	150
EVML-ME-050015-...-O20 ④	282	258	9	303	235	200

-...:	**No number**	For 230 Vac	**24A**	For 24 Vac
	110	For 110 Vac/dc	**48D**	For 48 Vdc
	12	For 12 Vac/dc	**48A**	For 48 Vac
	24D	For 24 Vdc		

DIMENSIONAL DRAWING

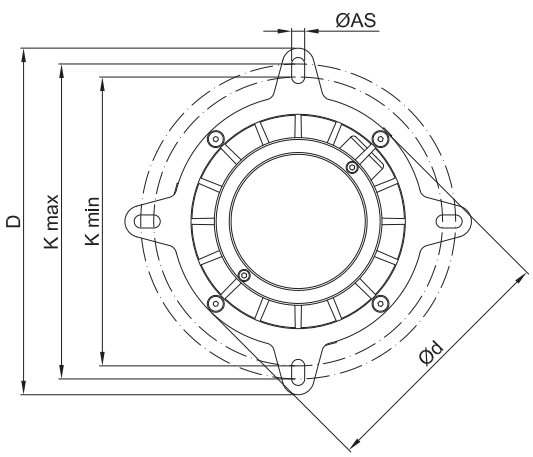

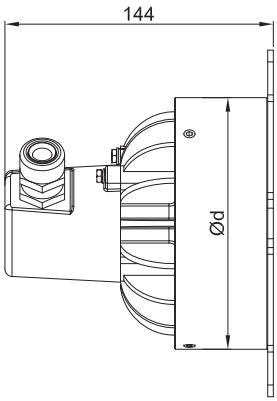

Application example made with EVML-ME-050015-O12 LED lighting fixtures with round windows

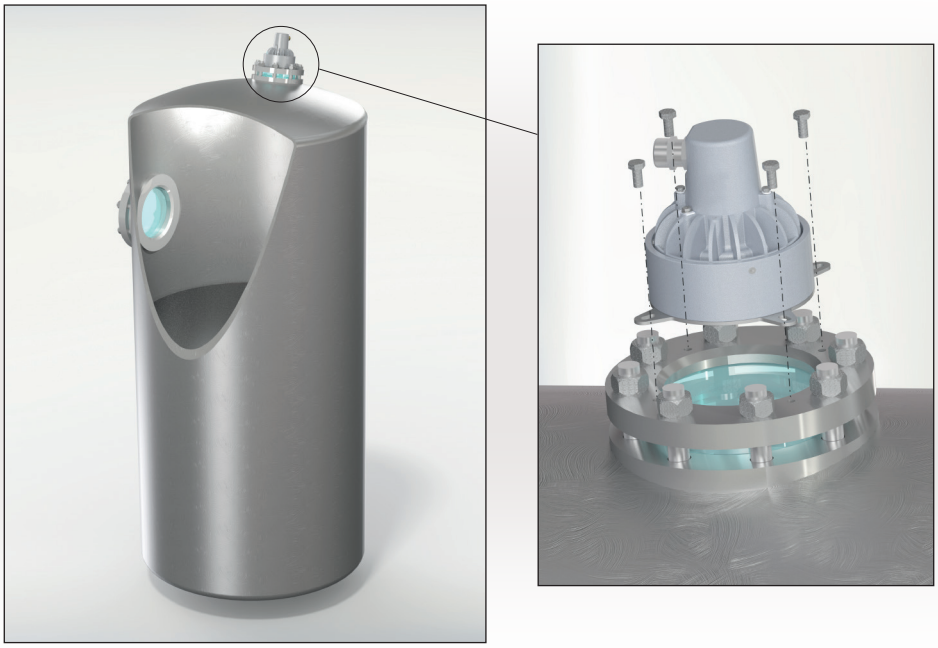

Obstruction lighting EVML-ME-050015-...-G...

EVML-ME-050015-..-G.. are the new lighting fixtures which feature a LED plate and a globe of different colours: blue, red, green, amber or clear. They can be installed in locations where obstacles, dangers are needed to be signalled and for any visual communication. They replace acoustic signals in places where they are not applicable.

Code	Colour
EVML-ME-050015-...-GG	Amber
EVML-ME-050015-...-GR	Red
EVML-ME-050015-...-GV	Green
EVML-ME-050015-...-GB	Blue
EVML-ME-050015-...-GI	Clear

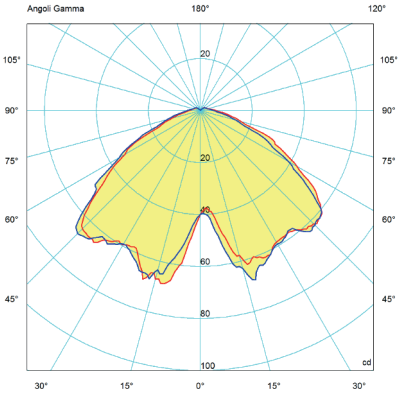

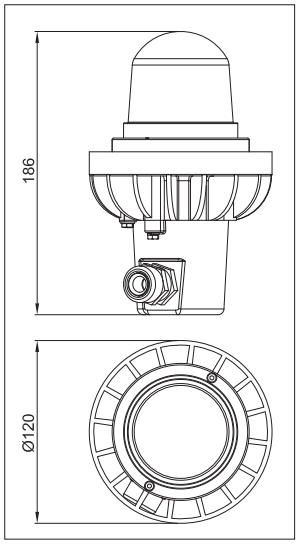

-...:	**No number**	For 230 Vac	**24A**	For 24 Vac
	110	For 110 Vac/dc	**48D**	For 48 Vdc
	12	For 12 Vac/dc	**48A**	For 48 Vac
	24D	For 24 Vdc		

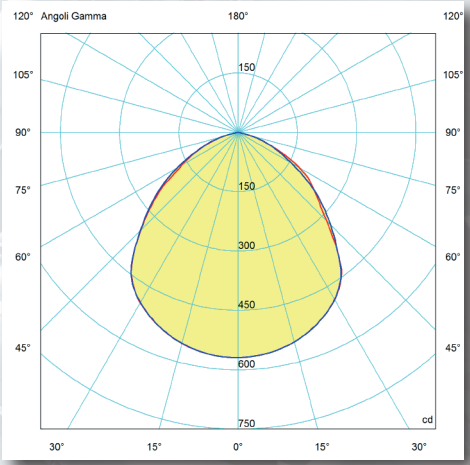

EVML-ME-060015-48D
Luminous flux: 1361 lm

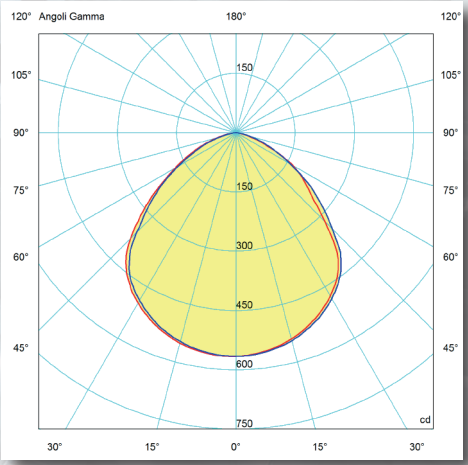

EVML-ME-060015-12
Luminous flux: 1365 lm

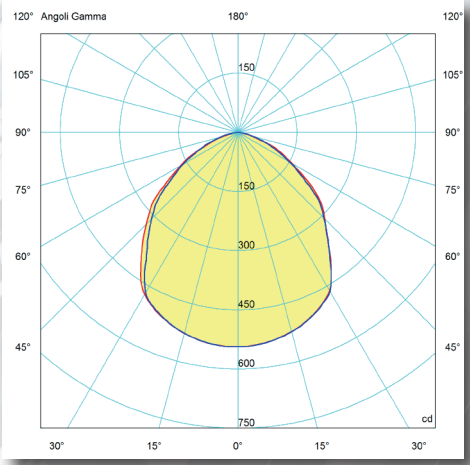

EVML-ME-060030
Luminous flux: 2913 lm

EVML-ME-060030 illumination on the floor expressed in lux in a room 5m x 5m with the lighting fixtures centrally placed at **2,5m** in height

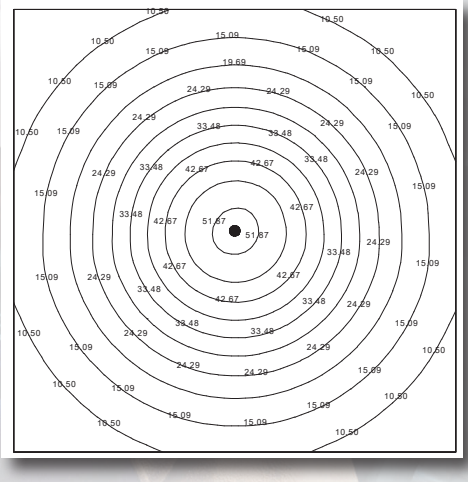

On Cortem Group web site you can download .LDT and .IES lighting data files for the design and simulation of lighting levels in 2D and 3D, rendering and ray tracing.

= plane 90270
= plane 0180

EVML-ME-050015P hand-held lighting fixture

The LED EVML-ME-050015P hand-held lighting fixture, powered with cable, has been designed to be used mainly in inspection and maintenance activities on industrial plants, in tanks and in all those places where there is a potentially dangerous atmosphere formed by gas and dust. The EVML-ME-050015P series hand-held lighting fixture is characterized by a non-slip handle and a high degree of body strength combined with excellent light performance. A further peculiarity of this hand-held lighting fixture is the possibility of being powered with different voltages at 12, 24, 48, 110 Vac/dc and 230 Vac for a wider use.

Classification: 2014/34/UE	Group II	Category 2GD
Installazion: EN 60079.14	zone 1 - zone 2 (Gas)	zone 21 - zone 22 (Dust)
Execution:	CE 0722 Ex II 2GD Ex eb mb IIC T.. Gb Ex tb IIIC T..°C Db IP66	
Certificate:	ATEX CML 19 ATEX 3019X	
	IEC Ex IECEx CML 19.0003X	For all IEC Ex, INMETRO certification data, download the certificate from www.cortemgroup.com
	INMETRO AVAILABLE	
Standard:	CENELEC EN 60079-0: 2018, EN 60079-7: 2015-18, EN 60079-18: 2015-17, EN 60079-31: 2024 and EUROPEAN DIRECTIVE 2014/34/UE IEC 60079-0: 2017, IEC 60079-7: 2017, IEC 60079-18: 2014-17, IEC 60079-31: 2022 European Directive 2004/108 Electromagnetic compatibility European Directive 2012/19/UE, 2002/96/CE, 2003/108/CE WEEE European Directive 2011/65/UE RoHS	
Temp. class:	See "selection table"	
Ambient temp.:	-60°C +40°C (+50°C +60°C)	
Protection rating:	IP66	

FEATURES

- Low copper content aluminium alloy fitted with cooling fins for better heat dissipation.
- Polyester coating Ral 7035.
- Shock and temperature resistant tempered glass.
- Non-slip black handle.
- High corrosion resistance.
- Suitable for offshore / onshore environments.
- Easy connection.
- Cable gland for non-armored cable NAV20IB, cable range 6.5 ÷ 14.

ACCESSORIES AVAILABLE / SPECIAL REQUESTS

5 meters long cable and SPY series plug (example code EVML-ME-050015-24DP**T**)

Hook for hand-held lighting fixture (code G-1061)

EVML-ME-050015P lighting fixture selection chart

Code	Watt	Supply voltage	Temperature class			Weight kg	mm
			Ta <+40°C	Ta <+50°C	Ta <+60°C		
EVML-ME-050015P	15 W	220-240 Vac	T5/95°C	T4/105°C	T4/115°C	1.4	
EVML-ME-050015-110P	15 W	110 Vac/dc	T6/64°C	T6/74°C	T5/84°C	1.4	
EVML-ME-050015-12P	15 W	12 Vac/dc	T6/66°C	T6/76°C	T5/86°C	1.4	
EVML-ME-050015-24DP	15 W	24 Vdc	T6/66°C	T6/76°C	T5/86°C	1.4	
EVML-ME-050015-24AP	15 W	24 Vac	T6/64°C	T6/74°C	T5/84°C	1.4	
EVML-ME-050015-48DP	15 W	48 Vdc	T5/81°C	T5/91°C	T4/101°C	1.4	
EVML-ME-050015-48AP	15 W	48 Vac	T6/77°C	T5/87°C	T4/97°C	1.4	

DIMENSIONAL DRAWING

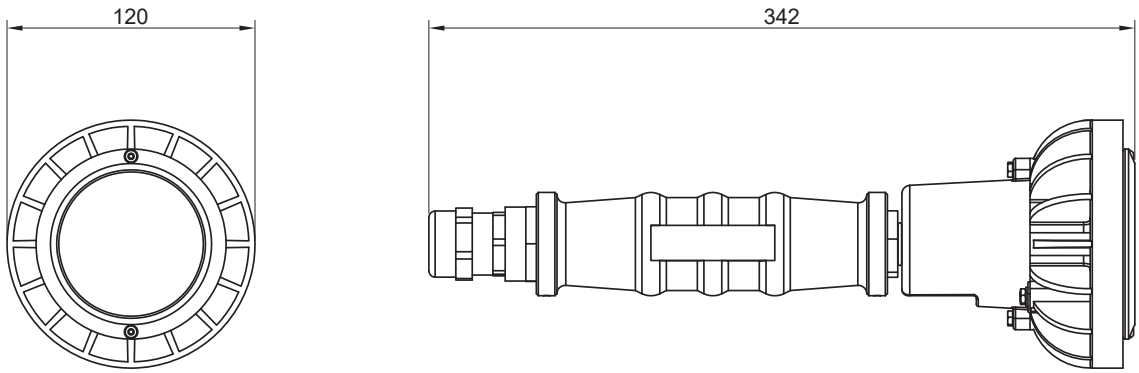

EXPLODED DIAGRAM OF EVML-ME-050015P

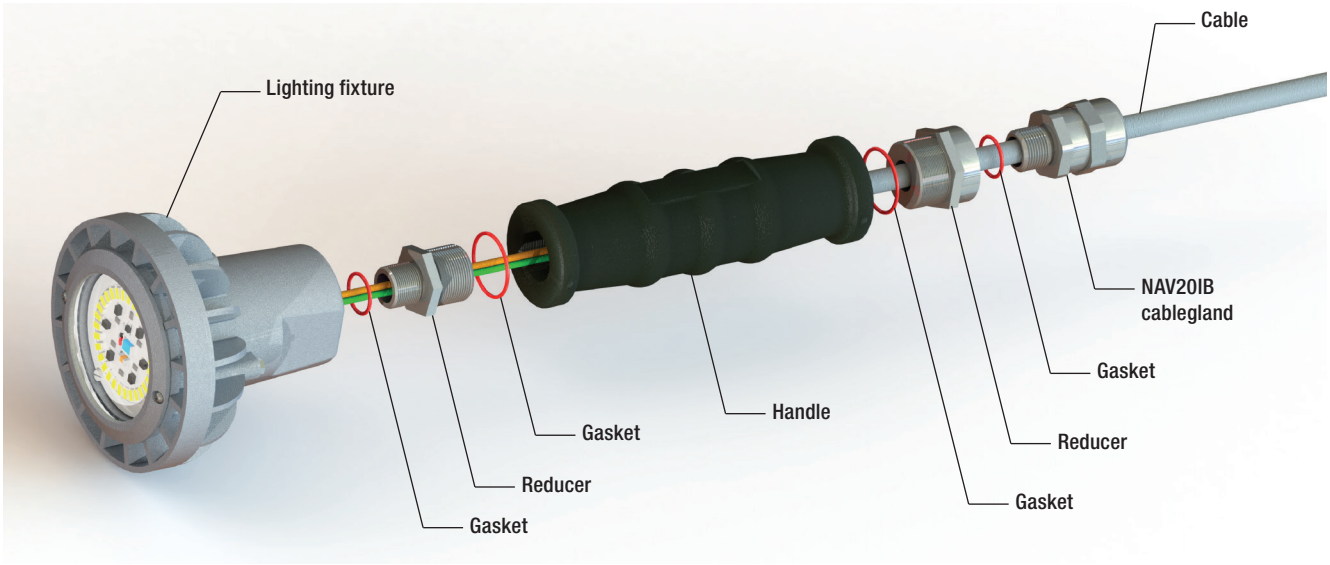

MSU Signalling lightings

The MSU series signalling lighting equipment is designed to be used in hazardous areas as indicator of dangers and for any communication need, replacing also acoustic signals. It is a multi-unit device formed by a metal sheet base, fixable on walls, poles, etc., by EVML-ME-050015...G signalling lighting equipment and by an 'Ex e' aluminum junction box SA series. The EVML-ME-050015...G signalling lighting equipment are available with a LED and globe of different colours: blue, red, green, amber and clear.

FEATURES

- Pre-wired ready to use multi-signalling unit
- Corrosion resistant
- Coating RAL7035
- Suitable for offshore / onshore & harsh environments
- 'Ex e' termination area
- Quick and easy to terminate
- Cablegland NAV25IB, range cable 11 ÷ 20
- High ingress protection IP66
- Extreme temperature range -40°C...+60°C
- Light enhancing lens, 5 colour options
- Up to 5 beacon positions
- Power supply: 230 Vac
- Rated frequency: 50-60 Hz
- Lumen (single signal lamps): 1032 lm
- Max. light intensity (single signal lamps): 385 cd

ACCESSORIES AVAILABLE / SPECIAL REQUESTS

Different rated voltages

Different combination upon requests

Code	Type Lamp	Device	Watt
MSU-2RV	LED	2-way	19 W
MSU-3RGV	LED	3-way	19 W
MSU-4RGBV	LED	4 -way	19 W
MSU-5RGBVI	LED	5-way	19 W

DIMENSIONAL DRAWINGS

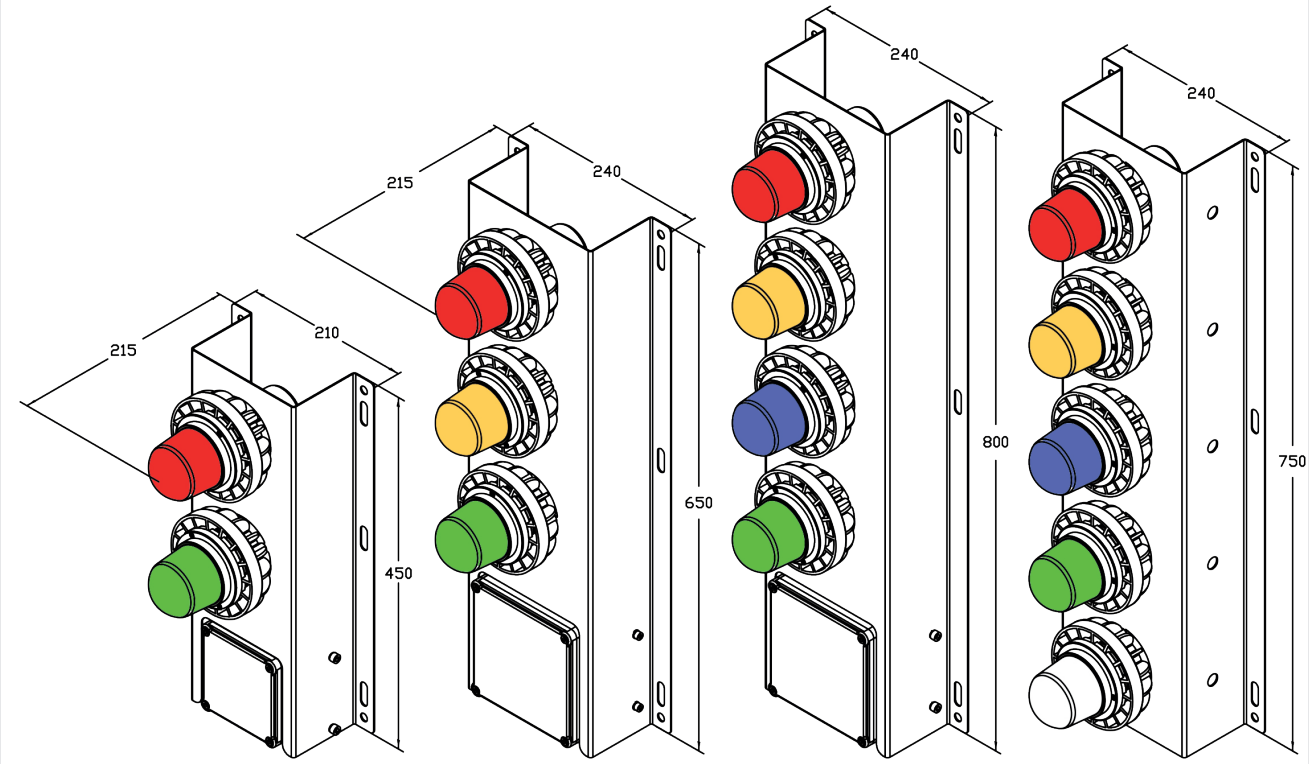

MSU-2RV
Red
Green

MSU-3RGV
Red
Ambrer
Green

MSU-4RGBV
Red
Amber
Blue
Green

MSU-5RGBVI
Red
Amber
Blue
Green
Colorless

ELECTRICAL CONNECTION

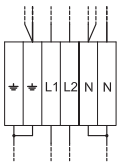

MSU-2RV

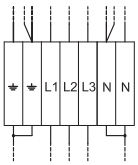

MSU-3RGV

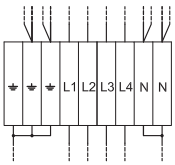

MSU-4RGBV

Wiring inside the junction box

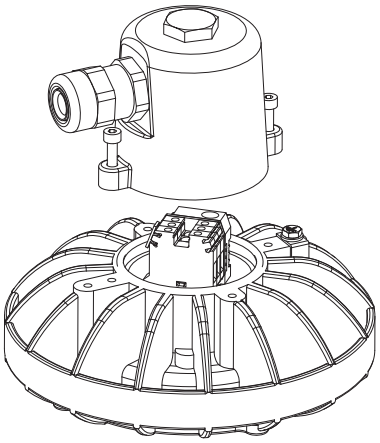

MSU-5RGBVI
Electrical connection directly to the entrance of the lighting fixtures