EV

- Optimal performance at high (+60°C) and low temperatures (-50°C)
- Easy to install, low maintenance costs
- Zone 1, 2, 21, 22

CORTEM GROUP®

EV series Lighting fixtures for traditional and LED lamps

EV series lighting fixtures have been specially designed for use in the petrochemical and oil refining industries as they combine beauty and functionality along with high performance and simplicity in complete compliance with the technological requirements of the "Ex sector". The low copper content aluminium alloy, shockproof borosilicate glass and electro-polished stainless steel components make these lighting fixtures ideal for use in environments with corrosive atmospheric agents, salts and industrial pollution. Mechanical characteristics such as ceramic lamp holders with high heat resistance and insulating properties and acid-proof neoprene gaskets guarantee a long working life with little maintenance. Scheduled maintenance work involves simply cleaning the glass that, thanks to its IP66 protection, can be safely cleaned with a wet cloth. As specified in the appropriate installation standard (EN/IEC 60079-14), the entry to the fixture must be only through an Ex "barrier" cable gland (sealed) or, in the case of a conduit system, with an EYS, EZS sealing fittings.

Application sectors

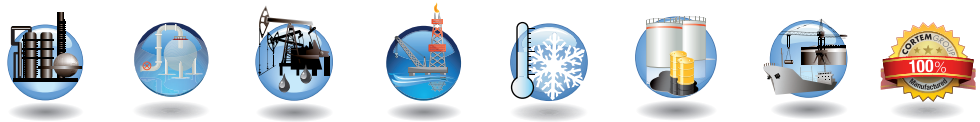

Oil refineries | Chemical and petrochemical plants | Onshore plants | Offshore plants | Low temperatures | Fuel depots | Oil loading/ unloading jetties | 100% Cortem product

CERTIFICATION DATA

Classification:	Group II	Category 2GD		
Installation:	Zone 1 - Zone 2 (Gas)	Zone 21 - Zone 22 (Dust)		
Marking:	CE 0722 Ex II 2GD Ex d IIC T.. Gb - Ex tb IIIC T..°C Db IP66			
Certification:	ATEX CESI 12 ATEX 006			
	IEC Ex CES 07.0004	All IEC Ex and TR CU certification data can be downloaded at www.cortemgroup.com		
	TR CU AVAILABLE			
Standards:	CENELEC EN 60079-0: 2012, EN 60079-1: 2007, EN 60079-31: 2009 and EUROPEAN DIRECTIVE 2014/34/UE IEC 60079-0: 2011, IEC 60079-1: 2007, IEC 60079-31: 2008 European Directive 2004/108 Electromagnetic compatibility European Directive 2012/19/UE, 2002/96/CE, 2003/108/CE WEEE European Directive 2011/65/UE RoHS			
Class temperature:	See the selection table			
Ambient temperature:	-20°C +60°C			
Degree of protection:	IP66			

EV series Lighting fixtures for traditional and LED lamps

ORIGINAL PRODUCT

MECHANICAL FEATURES

Body:	Low copper content aluminium alloy
Globe:	Shock and temperature resistant borosilicate glass with aluminium shade ring
Gaskets:	Silicone acid/hydrocarbon resistant
Guard:	Electro-polished stainless steel. Can also be supplied on request without a guard as the lighting fixture has passed the glass breakage test (4 Joule EN60079-0 / IEC60079-0)
Mounting:	See "EV series dimensional drawings"
Bolts and screws:	Stainless steel
Entries:	3/4" NPT threads
Coating:	Polyester coating Ral 7035 (Light grey)
Corrosion Resistance:	The STANDARD of the aluminium alloy used by Cortem has passed the tests required by standards EN60068-2-30 (hot/humid cycles) and EN60068-2-11 (salt mist tests)

ELECTRICAL FEATURES

Lamp holder:	E27 or E40 ceramic
Rated voltage:	230 V AC
Rated frequency:	50/60 Hz
Connection:	Direct connection to lamp holder L, N. Section 4mm^2

ACCESSORIES AVAILABLE / SPECIAL REQUESTS

LED lamps
External reflector
Cable gland: NAV2NB for armoured cable or NAVB2NB for non-armoured cable
Warning signs: G-0513
GAS UNI ISO 7/1 thread
Different rated voltages

EVA series selection chart Pendant mounting

Code	Dimensions mm A	Dimensions mm B	Lamp type	Lamp holder	Watt	Class Ta=+60°C	Max surface temperature °C	Weight kg	mm
EVA-5050	261	150	AL	E 27	70	T4	123	2,0	160x150x330
EVA-5050	261	150	AL	E 27	105	T3	154	2,0	160x150x330
EVA-5050	261	150	AL	E 27	140	T3	154	2,0	160x150x330
EVA-5050	261	150	ELS	E 27	15	T6	84	2,0	160x150x330
EVA-5050	261	150	LED	E 27	8	T6	74	2,0	160x150x330
EVA-5060	323	170	EL	E 27	23	T5	86	2,7	190x170x390
EVA-5060	323	170	ELS	E 27	23	T5	86	2,7	190x170x390
EVA-5060	323	170	LED	E 27	12	T6	74	2,7	190x170x390

EVA Pendant mounting

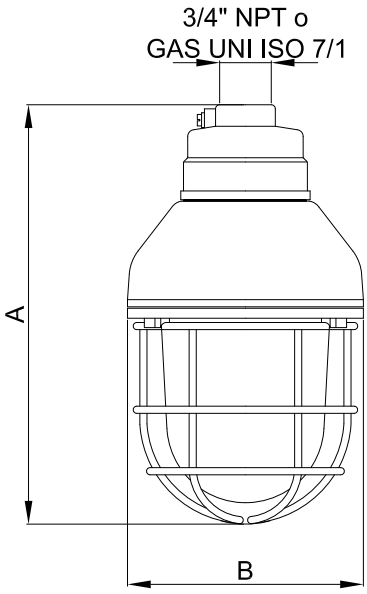

Key

EL = Linear tubes (FBT)
AL = Halogen (HSGSA)
ELS = Spiral tubes (FB)
LED = With LED (DB)

Dimensions in mm

EVGC series selection chart Pendant mounting with eyebolt

Code	Dimension mm A	Dimension mm B	Lamp type	Lamp holder	Watt	Class Ta=+60°C	Max surface temperature °C	Weight kg	mm
EVGC-5050	296	150	AL	E 27	70	T4	123	2,1	160x150x330
EVGC-5050	296	150	AL	E 27	105	T3	154	2,1	160x150x330
EVGC-5050	296	150	AL	E 27	140	T3	154	2,1	160x150x330
EVGC-5050	296	150	ELS	E 27	15	T6	84	2,1	160x150x330
EVGC-5050	296	150	LED	E 27	8	T6	74	2,1	160x150x330
EVGC-5060	358	170	EL	E 27	23	T5	86	2,8	190x170x390
EVGC-5060	358	170	ELS	E 27	23	T5	86	2,8	190x170x390
EVGC-5060	358	170	LED	E 27	12	T6	74	2,8	190x170x390

EVGC Pendant mounting with eyebolt

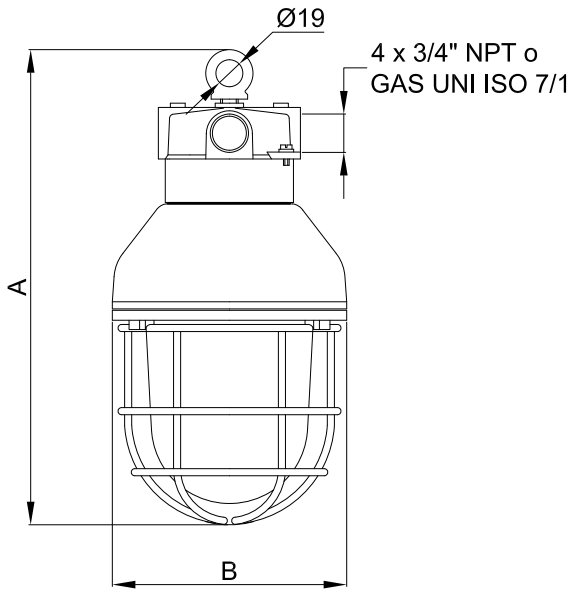

Key

EL = Linear tubes (FBT)
AL = Halogen (HSGSA)
ELS = Spiral tubes (FB)
LED = With LED (DB)

Dimensions in mm

EVIX series selection chart Wall mounting

Coce	Dimensioi mm			Lamp type	Lamp holder	Watt	Class Ta=+60°C	Max surface temperature °C	Weight kg	mm
	A	B	C							
EVIX-5050	285	150	310	AL	E 27	70	T4	123	2,9	190x170x390
EVIX-5050	285	150	310	AL	E 27	105	T3	154	2,9	190x170x390
EVIX-5050	285	150	310	AL	E 27	140	T3	154	2,9	190x170x390
EVIX-5050	285	150	310	ELS	E 27	15	T6	84	2,9	190x170x390
EVIX-5050	285	150	310	LED	E 27	8	T6	74	2,9	190x170x390
EVIX-5060	339	170	344	EL	E 27	23	T5	86	3,7	260x210x490
EVIX-5060	339	170	344	ELS	E 27	23	T5	86	3,7	260x210x490
EVIX-5060	339	170	344	LED	E 27	12	T6	74	3,7	260x210x490

EVIX Wall mounting with 30° bracket

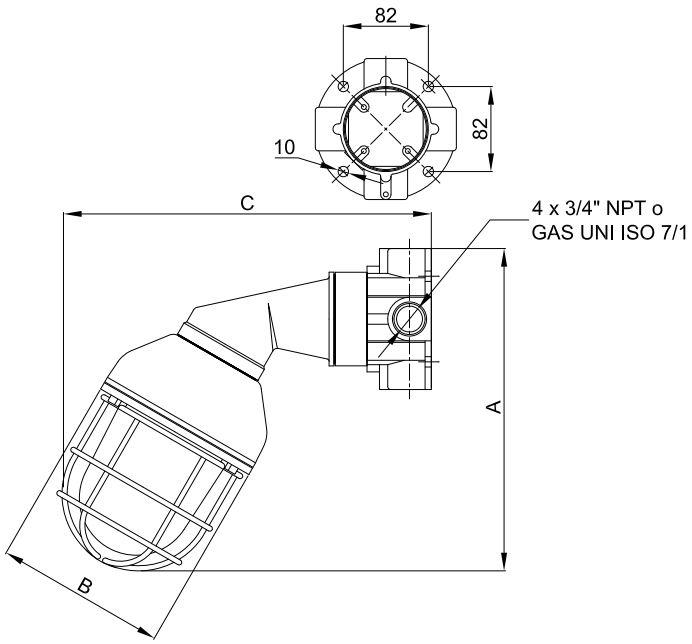

Key

EL = Linear tubes (FBT)
AL = Halogen (HSGSA)
ELS = Spiral tubes (FB)
LED = With LED (DB)

Dimensions in mm

EVX series selection chart Ceiling mounting

Code	Dimension mm A	Dimension mm B	Lamp type	Lamp holder	Watt	Class Ta=+60°C	Max surface temperature °C	Weight kg	mm
EVX-5050	260	150	AL	E 27	70	T4	123	2,4	160x150x330
EVX-5050	260	150	AL	E 27	105	T3	154	2,4	160x150x330
EVX-5050	260	150	AL	E 27	140	T3	154	2,4	160x150x330
EVX-5050	260	150	ELS	E 27	15	T6	84	2,4	160x150x330
EVX-5050	260	150	LED	E 27	8	T6	74	2,4	160x150x330
EVX-5060	322	170	EL	E 27	23	T5	86	3,2	190x170x390
EVX-5060	322	170	ELS	E 27	23	T5	86	3,2	190x170x390
EVX-5060	322	170	LED	E 27	12	T6	74	3,2	190x170x390

EVX Ceiling mounting

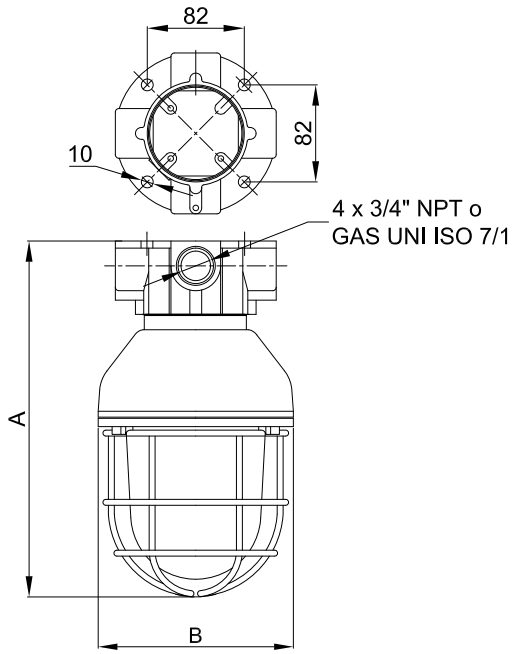

Dimensions in mm

Key

EL = Linear tubes (FBT)
AL = Halogen (HSGSA)
ELS = Spiral tubes (FB)
LED = With LED (DB)

DON'T FORGET TO ORDER THE ACCESSORIES

e.g. Type of lighting fixture EVX-5060 + Lamp LAMPLED12W + Dome reflector G60-427D + other... see key

EV... series Accessories and spare parts available on request

ILLUSTRATION	DESCRIPTION	MODEL	FEATURES	CODE	KEY
	LED lamp	E27	8 W (DB8W)	**LAMPLED8W**	
		E27	12 W (DB12W)	**LAMPLED12W**	
	Warning signs on request on the frame	50	Materials: Translucent film on plexiglass and aluminium frame	**G-0513**	
		60		**G-0513/1**	
	Emergency Exit	G-0513 G-0513/1	Materials: Translucent film	**U-420/P**	
	Emergency Exit on the right			**U-420/P1**	
	Emergency Exit on the left			**U-420/P2**	
	Emergency Exit upward			**U-420/P3**	
	Emergency Exit downward			**U-420/P4**	

EV... series Accessories and spare parts available on request

ILLUSTRATION	DESCRIPTION	MODEL	FEATURES	CODE	KEY
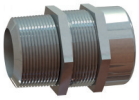	Cable gland		For models and codes, visit www.cortemgroup.com	**NAV2NB** **NAVB2NB**	ACCESSORY SPARE PART
	Reflector	50	White painted aluminium Stainless steel	**G50-427** **G50-427IN**	ACCESSORY SPARE PART
		60	White painted aluminium Stainless steel	**G60-427** **G60-427IN**	
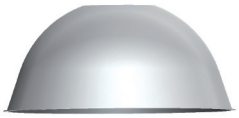	Dome reflector	50	Contact our Sales Office for availability		ACCESSORY SPARE PART
		60	White painted aluminium	**G60-427D**	
	30° inclined dome reflector	50	Contact our Sales Office for availability		ACCESSORY SPARE PART
		60	White painted aluminium	**G60-427DI**	
	Ceramic lamp holder	E27	250V 4A	**PORT E-27**	SPARE PART
		E40	750V 16A	**PORT E-40**	
	Protective guard	50	Material: Electro-polished stainless steel	**G50-0417**	SPARE PART
		60		**G60-0417**	

EV... series Accessories and spare parts available on request

ILLUSTRATION	DESCRIPTION	MODEL	FEATURES	CODE	KEY
	O-ring	Globo 50	Material: silicone	OR-4512SH70S	SPARE PART
		Globo 60		K15-131S	
	Globe with shade ring	50	Borosilicate glass globe Threaded aluminium shade ring	G50-0440CM	SPARE PART
		60		G60-0440CM	
	Pendant eyebolt		Material: Galvanised steel	GOF-8	SPARE PART
	Pendant mounting EVA	50	1 x 3/4" Entry	G-0213	SPARE PART
		60			
	Pendant mounting with eyebolt EVGC	50	4 x 3/4" Entries	G-0216	SPARE PART
		60			
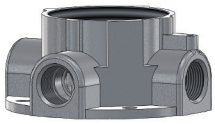	Ceiling mounting EVX	50	4 x 3/4" Entries	G-0214	SPARE PART
		60			
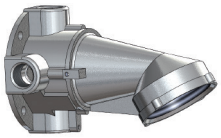	Wall mounting with bracket EVIX	50	4 x 3/4" Entries	G-0215	SPARE PART
		60			

Example of pole mounting

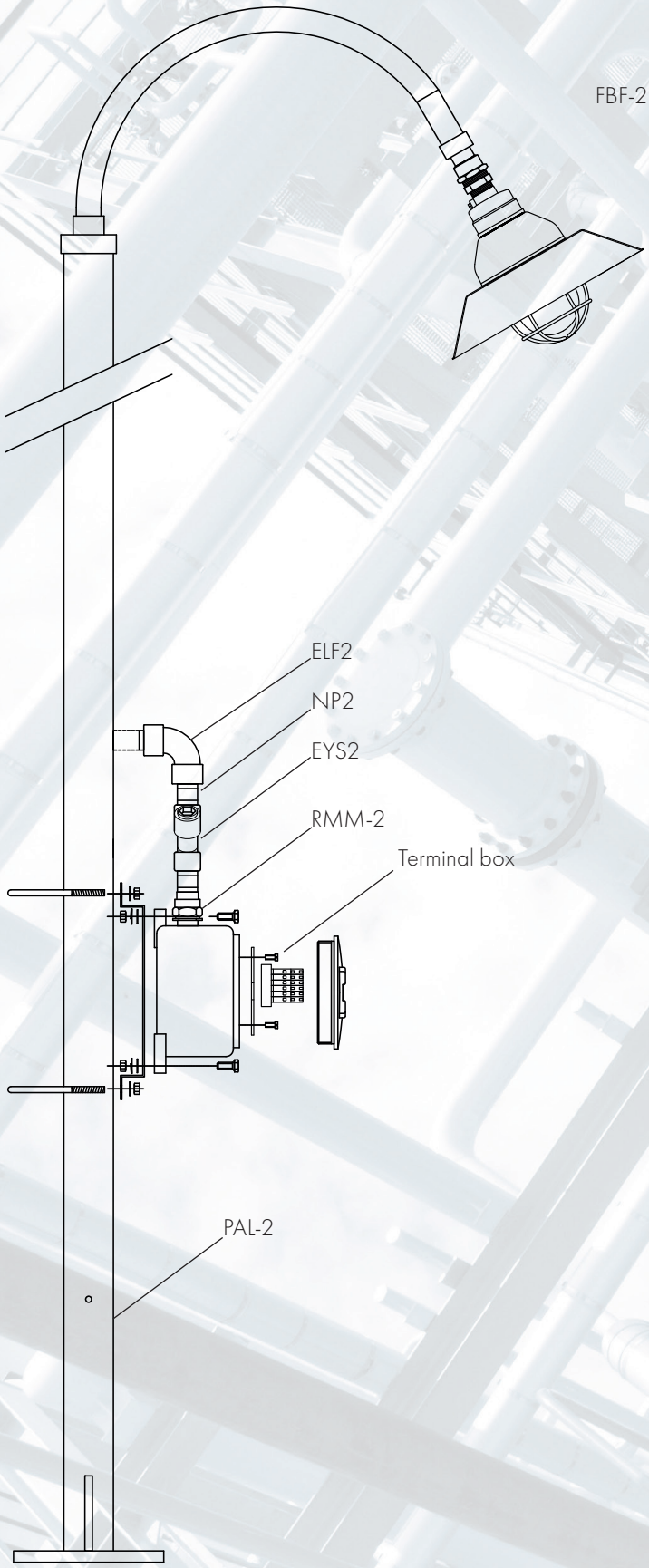

Example of ceiling mounting

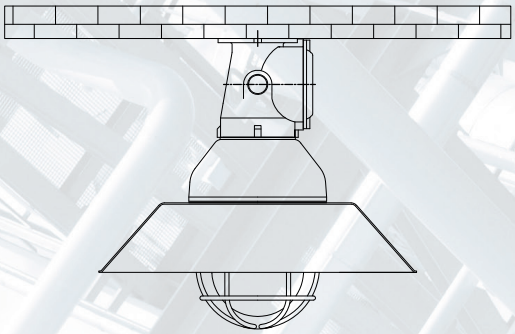

Example of wall mounting

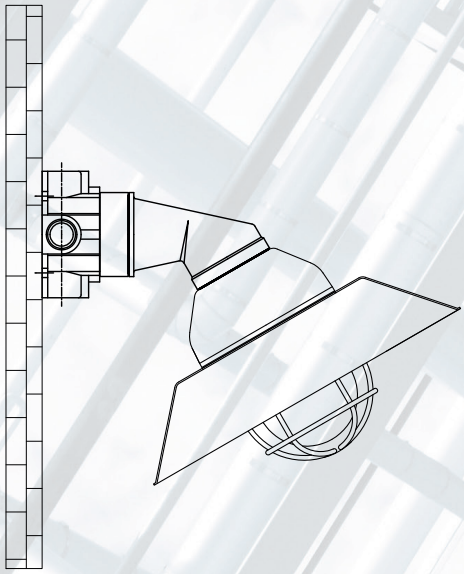

Photometric diagram

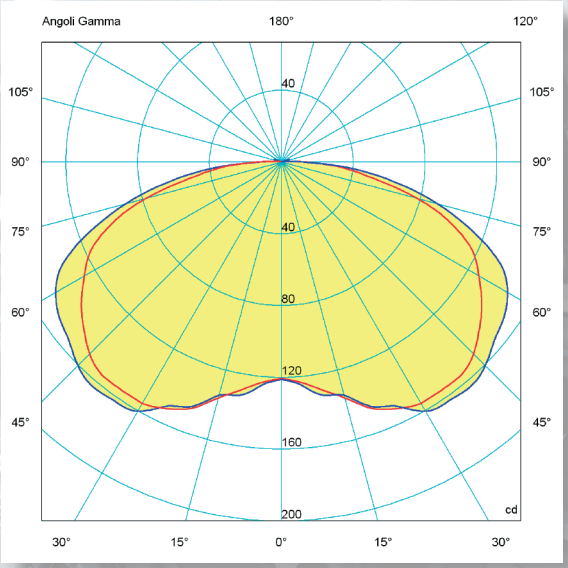

EVE..5060 23W EL

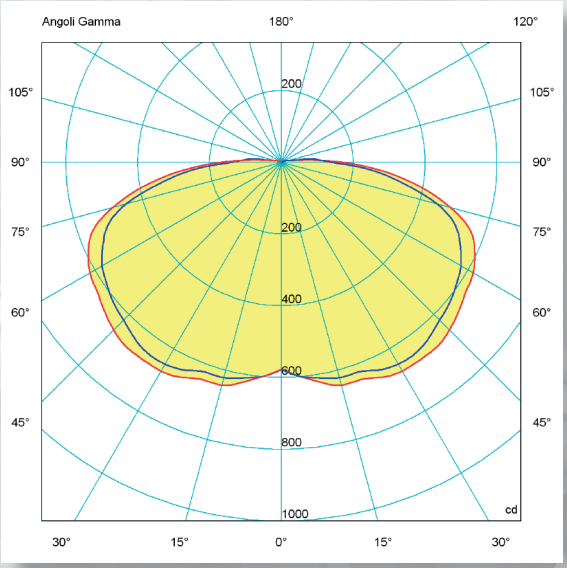

EVE..5060 23W EL

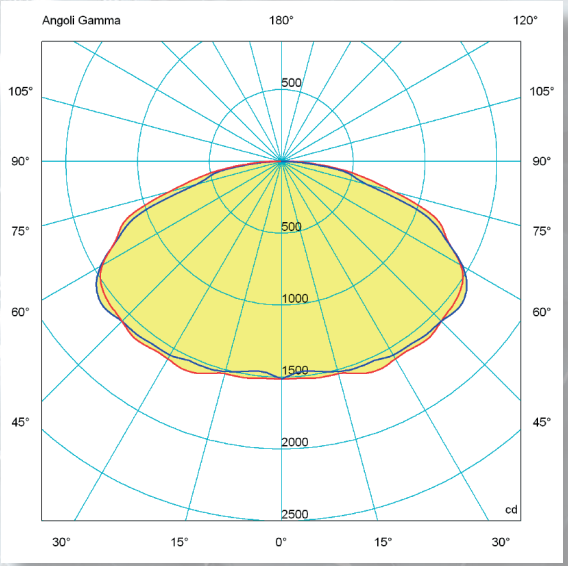

EVE..5060 23W EL

On Cortem Group web site you can download .LDT and .IES lighting data files for the design and simulation of lighting levels in 2D and 3D, rendering and ray tracing.

= plane 90270

= plane 0180