EJBC

- Zone 1, 2, 21, 22
- Group IIC
- Aluminium junction boxes
- IP 66 / 67

PATENTED

Patent Pending

Multi-step joint on body and cover

External earth screw in body

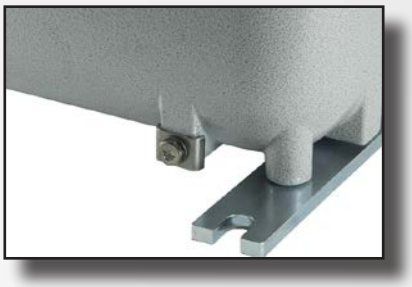

Internal earth screw in body

EJBC-... series Aluminium junction boxes gas group IIC

The EJBC series junction boxes have been carefully designed to allow their installation in areas with danger of explosion and/or fire due to the presence of all Gases of Group IIA - IIB - IIC classified as Zone 1, 2, 21, 22. The peculiar multi-step joint, obtained thanks to the high quality and precision of the machining, has allowed, in fact, the extension of the protection of gases to Group IIC [Acetylene (C_2H_2), Carbon disulphide, Hydrogen (H_2)]. The quality of this product is recognized and valued the world over for its specific aluminium alloy and the mechanical property of its finishes. The EJBC series is mostly used as a box to carry terminals and busbars, fuse carriers, transformers, reactors and barriers, though it is also used to produce control and signalling boards, light and power boards and surge arresters, and motor starter boxes with various configurations, which are custom made to the requirements of our customers worldwide.

Cortem Group labels its products with a non-removable adhesive label featuring a hologram and an alphanumerical univocal code, as a safety measure against the illegal sale of fakes so that all the products are guaranteed as original. Non-compliance with the International standards entails serious risks for the environment, especially for those working daily on the plants.

Application sectors:

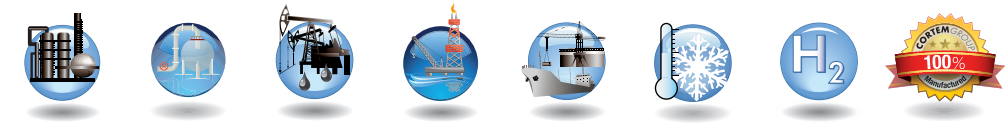

Oil refineries | Chemical and petrochemical plants | Onshore plants | Offshore plants | Oil loading/ offloading wharfs | Low temperatures | Presence of hydrogen | 100% Cortem product

CERTIFICATION DATA FOR EMPTY ENCLOSURES

Classification:	Group II	Category 2GD		
Installation: EN 60079.14	zone 1 - zone 2 (Gas)	zone 21 - zone 22 (Dust)		
Marking:	CE 0722 Ex II 2GD Ex db IIC T... Gb Ex tb IIIC T...°C Db IP66/67			
Certification:	ATEX EPT 20 ATEX 4074 U			
	IEC Ex IECEx EUT 20.0023U	All IEC Ex certification data can be downloaded from www.cortemgroup.com		
Standards:	CENELEC EN-IEC 60079-0:2018, EN 60079-1:2014, EN 60079-31:2014 and EUROPEAN DIRECTIVE 2014/34/UE IEC 60079-0:2017, IEC 60079-1:2014, IEC 60079-31:2013			
Ambient Temp.:	-60°C +150°C	For enclosures without operators, accessories, windows		
	-60°C +100°C	For enclosures without operators, accessories		
	-60°C +60°C	For all other versions		
	-40°C...	For junction box with window on the cover		
Degree of protection:	IP66/67	For enclosures without control and signalling devices		
	IP66	For enclosures with Cortem M-0...-series control and signalling devices		

CERTIFICATION DATA OF ENCLOSURES FOR CONTROL, MONITORING, SIGNALLING UNITS AND INTERFACE UNIT

Classification:	Group II	Category 2GD		
Installation: EN 60079.14	zone 1 - zone 2 (Gas)	zone 21 - zone 22 (Dust)		
Marking:	CE 0722 Ex II 2GD Ex db IIC T6...T4 Gb Ex tb IIIC T85°C...T135°C Db			
	CE 0722 Ex II 2GD Ex db [ia Ga] IIC T5/T6 Gb Ex tb [ia Da] IIIC T85°C/T100°C Db IP66/67			
Certification:	ATEX EPT 20 ATEX 4075 X			
	IEC Ex IECEx EUT 20.0024X	All IEC Ex certification data can be downloaded from www.cortemgroup.com		
Standards:	CENELEC EN-IEC 60079-0: 2018, EN 60079-1: 2014, EN 60079-11: 2012, EN 60079-31: 2014 and EUROPEAN DIRECTIVE 2014/34/UE IEC 60079-0: 2011, IEC 60079-1: 2014, IEC 60079-11: 2019, IEC 60079-31: 2013			
Ambient Temp.:	-60°C +40°C	With temperature class T6 and maximum surface temperature T85°C.		
	-60°C +55°C	With temperature class T5 and maximum surface temperature T100°C.		
	-40°C (+40°C +55°C)	For junction box with window on the cover		
Degree of protection:	IP66/67			

SELECTION CHART FOR ENCLOSURES

Code	Outside dimensions			Internal dimensions			Mounting			Mounting with brackets			Weight
	A	B	C	L	M	I	d	e	f	D	E	F	kg
EJBC-45	567	387	298	490	305	229	360	236	M10	360	356	11	38,9
EJBC-45B	567	387	248	490	305	179	360	236	M10	360	356	11	35,3
EJBC-5	632	432	341	560	360	275	350	550	M10	550	430	11	51
EJBC-5B	632	432	271	560	360	205	350	550	M10	550	430	11	43,4

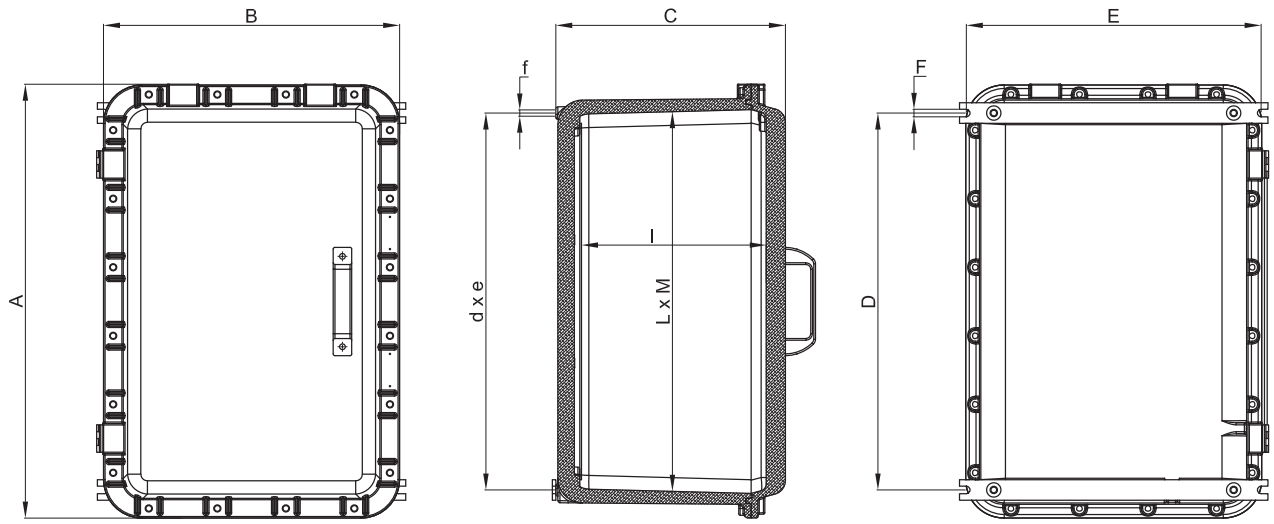

MECHANICAL FEATURES

Body and lid:	Low copper content aluminium alloy
Hinges:	Stainless steel
Lid handle:	Made of black painted plastic
Gasket:	Silicone, located between body and lid
Certification label:	Adhesive label located inside on empty enclosures; aluminium label riveted onto lid on other versions
Bolts and screws:	Stainless steel
Earth screws:	M6 stainless steel. On inside and outside of body and on lid complete with anti-rotation brackets
Mounting brackets:	Electrogalvanized steel
Coating:	Polyester coating RAL 7035 (Light grey)
Corrosion Resistance:	The STANDARD of the aluminium alloy used by Cortem has passed the tests required by standards EN 60068-2-30 (hot/humid cycles) and EN 60068-2-11 (salt mist tests)

ACCESSORIES AVAILABLE ON REQUEST/ SPECIAL REQUESTS

Internal anti-condensation coating RAL 2004 (pure orange)
External polyester coating in different colour (specify the RAL number)
Breather valve Code ECD-210S
Drain valve Code ECD-210S
Round or rectangular windows on lid (see section Enclosures with windows for inspection and reading instruments)
Internal mounting plate: 2.5mm-thick aluminium (code BFE-...). See accessories section
2.5mm-thick electrogalvanized steel (code BFE-...AC).

Thread options:
- NPT threads ANSI B1.20.1
- GAS UNI ISO 7-1 thread
- Metric threads ISO 261/965

Junction box in stainless steel AISI 316L (contact our Sales Office for availability)

Cortem manufactures any type of custom-made products according to customer specifications and in compliance with the certification data.

EJBC-... series Body drilling data

THREAD COMPARISON CHART									
ISO 7-1	1/2"	3/4"	1"	1 1/4"	1 1/2"	2"	2 1/2"	3"	4"
ANSI B.20.1 NPT	1/2"	3/4"	1"	1 1/4"	1 1/2"	2"	(*)	(*)	(*)
ISO 261/965	20x1.5	25x1.5	32x1.5	40x1.5	50x1.5	63x1.5	75x1.5	90x1,5	100x1,5
D Thread diameter	**1**	**2**	**3**	**4**	**5**	**6**	**7**	**8**	**10**

As required by the current standard, holes can be drilled by Cortem or by authorized partners who hold a production notification in accordance with ATEX Directive .

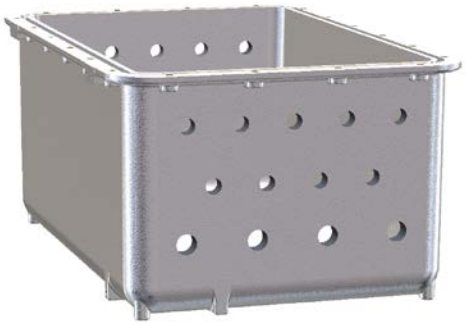

TYPE OF ENCLOSURE	HOLE DRILLING IN BODY																			
	Sides A and C										Sides B and D									
	Drilling area mm	MAXIMUM QUANTITY PER HOLE TYPE									Drilling area mm	MAXIMUM QUANTITY PER HOLE TYPE								
		1	2	3	4	5	6	7	8	10		1	2	3	4	5	6	7	8	10
EJBC-45	277x190	24	18	12	12	9	6	3	3	2	448x190	36	30	21	18	17	10	8	5	3
EJBC-45B	277x135	18	14	8	8	6	3	2	2	2	448x135	27	23	14	12	10	5	4	3	3
EJBC-5	320x230	30	28	20	12	11	9	6	4	3	520x230	50	45	32	21	18	15	10	8	5
EJBC-5B	320x160	24	18	15	8	8	6	3	2	2	520x160	40	27	24	14	12	12	5	4	3

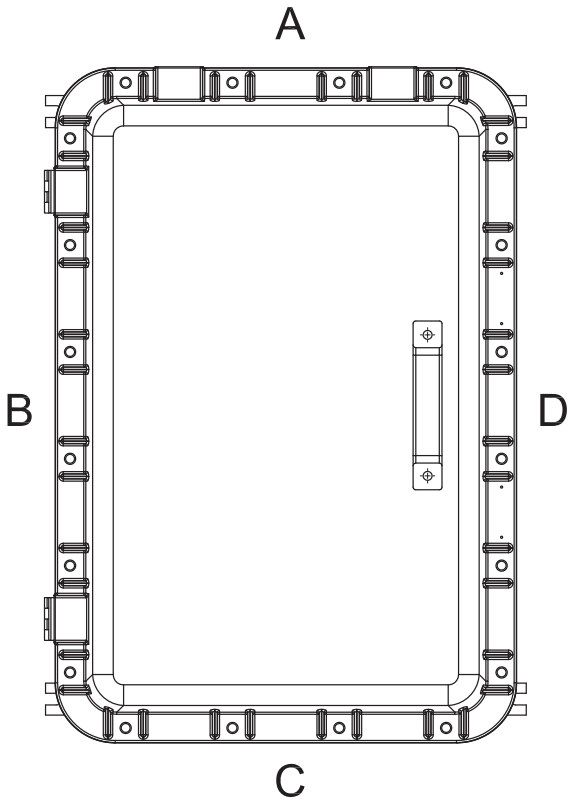

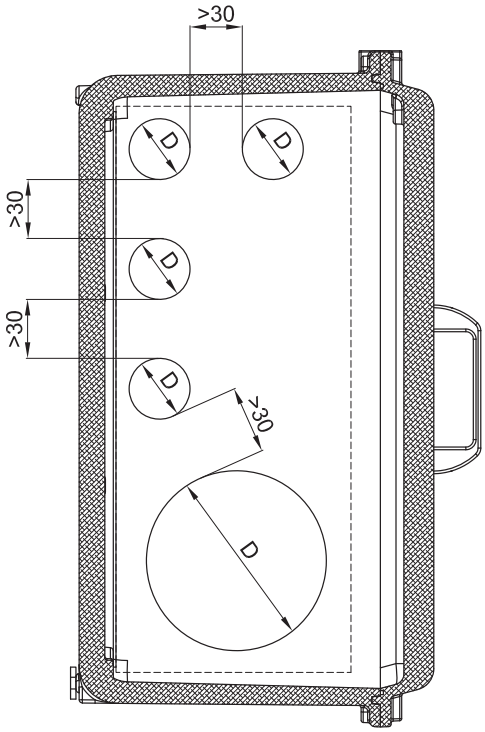

CORTEM® GROUP

THREAD COMPARISON CHART								
D1	ISO 228	G 3/8"	G 1/2"	G 3/4"	-	-	-	-
	ISO 261/965	M16x1.5	M20x1.5	M25x1.5	M32x1.5	M35x1.5	M40x1.5	M42x1.5

TYPE OF ENCLOSURE	HOLE DRILLING IN LID
	Max. n°. of holes allowed for solid lids
EJBC-45	28
EJBC-5	40

Notes:

- The standard featured is for illustrative purposes only since it has been designed exclusively for M42 holes.
- Standard holes refer to mounting of Cortem control and signalling devices.
- 3/8" Ø holes for Cortem std. side-mounted handles centre-to-centre distance >70mm.
- 1/2" Ø holes for Cortem std. heavy-duty series side-mounted handles centre-to-centre distance >120mm.

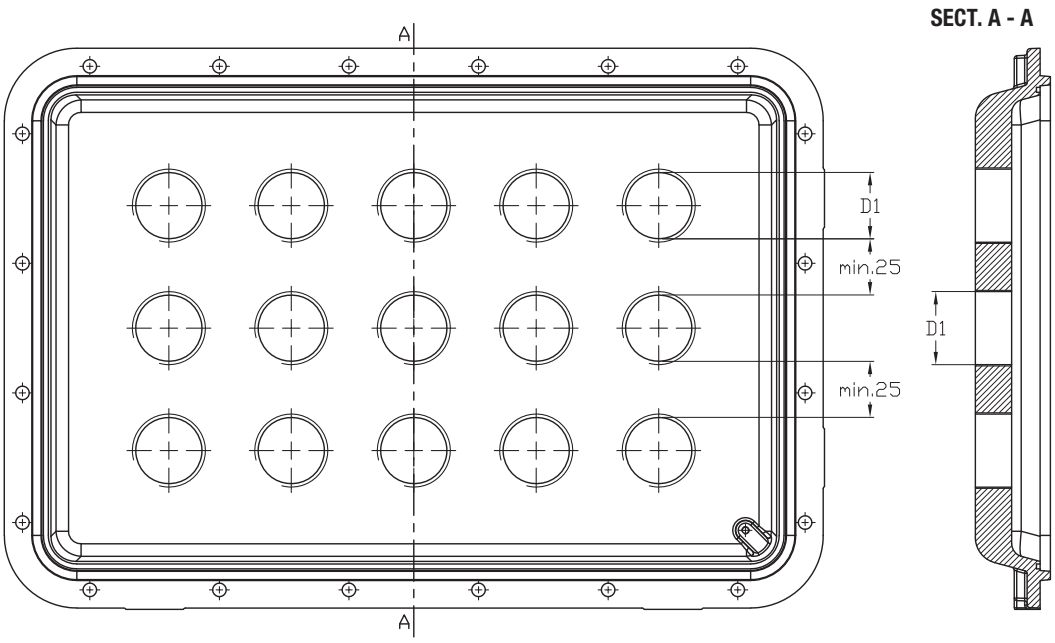

EJBC-... series Features of junction boxes with terminals

These enclosures are customized based on size, on the number of terminals or cables they are due to accommodate, or taking into account the number of cable entries and cabling requirements inside a system. Hence we can produce tailor-made solutions as long as you provide us with the appropriate parameters required at the quote request stage, such as the number of cable glands, unions or sealing fittings to be installed, so that we can determine the most suitable size of enclosure. All terminals can be fitted with your requested accessories and mounted on special rails that are fastened to the enclosure's internal mounting frames. Terminal strips can be arranged in various ways, as specified by the customer and always within the limits allowed by the certificate. The options are vertical, horizontal, in a number of rows, or on different levels using suitable spacers.

ELECTRICAL FEATURES

Rated voltage: 24 / 800 V
Rated frequency: 50 / 60 Hz

Modular terminals
Terminal cross-sectional area: 2.5; 4; 6; 10; 25; 35; 70; 95; 120; 185; 240; 300 [mm^2]
Rated current: 12.5 - 452 [A]
Max. current density: 1.5 - 7 [A/mm^2]

Multi-pole terminals
Terminal cross-sectional area: 3x16; 4x16; 3x25; 4x25; 3x40; 3x40; 4x40; 3x70; 4x125; 4x125; 3x200; 4x200; 3x315 [mm^2]
Rated current: 48 - 252 [A]
Max. current density: 0.8 - 3 [A/mm^2]

Busbars:

Dimensions of busbars:	20x5;	30x5;	40x5;	50x5;	60x5;	80x5;	100x4;	80x8;	100x5 [mm^2]
Rated current:	240	350	480	600	690	800	800	1000	1000 [A]

ATEX - IECEx label for terminal enclosures

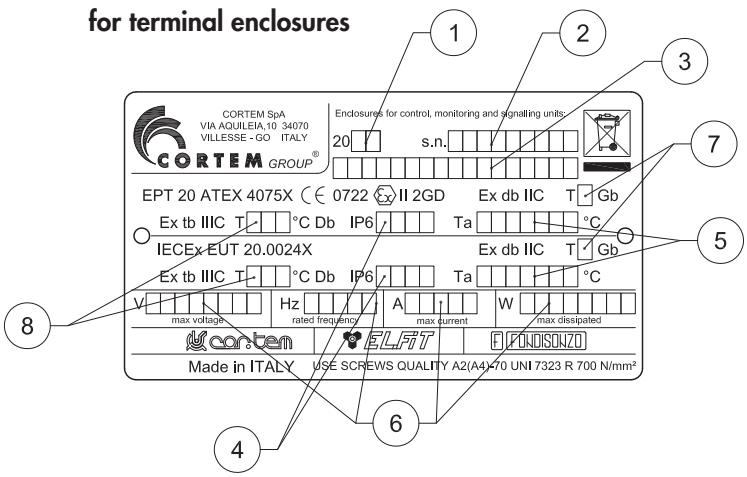

Data filled in:
1. year of manufacture
2. serial number
3. product code
4. degree of protection
5. ambient temperature
6. electrical specs per certificate
7. temperature class
8. maximum surface temperature

Examples of terminal strips with minimum installation distances

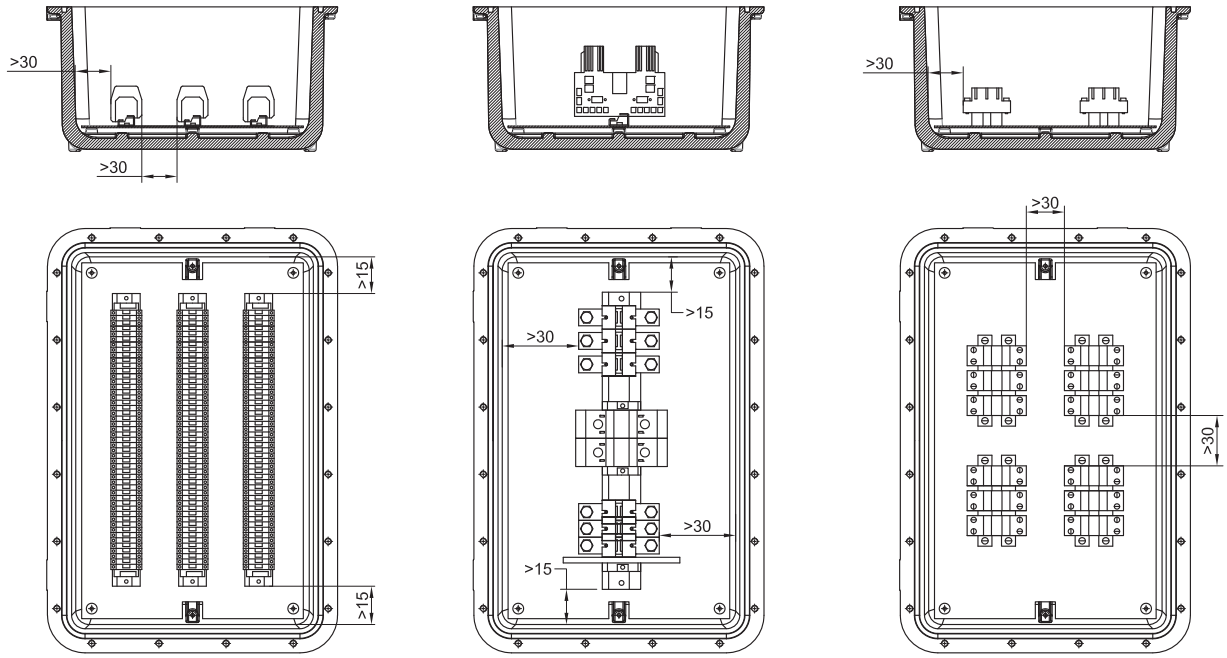

TYPE OF ENCLOSURE	MAXIMUM NUMBER OF TERMINALS HOUSED									
	TERMINAL CROSS-SECTIONAL AREA									
	2.5	4	6	10	16	35	70	120	185	240
EJBC-45	3x70	3x65	3x50	3x35	3x25	2x20	20	10	8	8
EJBC-45B	3x70	3x65	3x50	3x35	3x25	2x20	20	10	8	8
EJBC-5	3x80	3x70	3x60	3x50	3x40	2x28	22	10	10	8
EJBC-5B	3x80	3x70	3x60	3x50	3x40	2x28	22	10	10	8

Eg. 2x28= 2 rows of 28 terminals (total 56 terminals). The maximum number of standard terminals refers to CABUR terminals

Features of junction boxes for control, monitoring and signalling units

Control, monitoring and signalling units are used to produce control boards that, when positioned near the electrical equipment being controlled, enable the electrical system to operate correctly and guarantee the safety of personnel when maintenance is being performed on the system. Because they are fitted with a Manual/Automatic selector, they allow operators to select the appropriate conditions to enable work to be performed entirely safely. They offer protection and control for electrical equipment and control circuits located in explosion hazard areas and in particularly aggressive environments. They are used to hold electrical equipment, such as switches, indicators, contactors, transformers, analogue and digital components, etc.... with the option of external control by using lid-mounted Cortem control and signalling devices, such as control levers, pushbuttons, indicator lights, etc.... Cortem designs, develops and supplies full cabling for one or more enclosures tailored to your specific requirements, producing panel boards - including even extremely complex solutions - and providing a full inspection and testing service on request.

ELECTRICAL FEATURES

Rated voltage: 24 / 1000 Vac 12 / 250 Vdc
Max. current on contacts and fuses: 650 A
Rated frequency: 50 / 60Hz
Max. wattage for lamps: 5 W (for Ta +40°C) /3 W (for Ta +55°C)

Electrical characteristics valid for size EJBC-45, EJBC-5 (T5 100°C).
Rated voltage: up to 750 Vcc
Max. current: up to 630 A

Features of equipment that can be installed in enclosures to produce control and monitoring units.
Table of electrical features of components that can be installed in enclosures to produce control, monitoring and signalling units.
(The values refer to the catalogs of the leading manufacturers of electrical/electronic components available on the market)

COMPONENT TYPE	Max. V (Volts)	Max. I (Amperes)	Max. power (Watts)
Analogue and digital instruments	660	5	10
Electronic inverters/reactors	400	-	10
PLCs Multiplexers and amplifiers	240	-	80
Testing and measuring devices	240	-	100
Circuit breakers	660	650	-
Fuses	660	400	-
Relays	500	10	12
Electronic control devices	660	-	100
Contactors	660	650	30
Timers	240	10	5
Twilight relays	240	-	2
Capacitors	660	-	-
Transformers	660	-	200
Resistors	240	-	300
Terminals	660	-	-
Reactors	277	7.5	40

Minimum air gap between components

Component voltage (V ac)	Min. air gap (mm)
60 - 250	6
250 - 380	8
380 - 500	10
500 - 660	12
660 - 1000	20
Component voltage (V dc)	**Min. air gap (mm)**
12 - 250	6

Identification and description of special equipment that can be installed inside.

Enclosures with batteries

Option of installing low-capacity batteries ≤1.5Ah, for powering small electronic devices or backup memories.
Whatever the case, the minimum distance of 20mm between the components installed and the inside walls of the enclosure must be met.

Enclosures with inverters

EJBC-45, EJBC-5 series enclosures, depending on the maximum ambient temperature (+40°C or + 55°C), can be fitted with inverters (ABB ACS550 or similar types) provided maximum power dissipation falls within the permitted range (see table).

Enclosure type	Maximum inverter power for Ta +40°C	Maximum inverter power for Ta +55°C	Maximum inverter power	Cooling fan flow rate
EJBC-45	2.2 kW	1.5 kW	73 W	44 m^3/h
EJBC-5	5.5 kW	4.0 kW	172 W	44 m^3/h

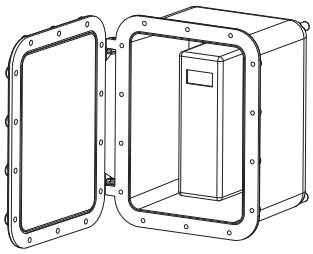

Enclosures with surge arresters

Option of installing PRD or similar types of surge arresters, with a maximum protection limit of 65kA; whatever the case, the minimum distance of 20 mm between the arrester and the inside walls of the enclosure must be met.

Enclosures with fibre-optic cables

The enclosures have provision for feeding multiple (not single) fibre-optic cables in and out. The permitted optical power and radiation limits for optical cables are:
- 35mW and 5mW/m^2 for T4 temperature class
- 15mW and 5mW/m^2 for T6 temperature class

Enclosures with power transformer

Option of installing single-phase transformers provided maximum power is within the limits allowed by the certificate.

Enclosures with radio-frequency sources

Option of installing components with radio-frequency sources in the 9kHz to 60GHz range that can be used for continuous and pulsed transmission of signals. Antennas can be installed inside or outside the enclosure and must:
- comply with one of the protection types indicated in standard EN-IEC 60079-0.
- be installed outside the hazardous area.

For more information, refer to certificate EPT 20 ATEX 4075 X / IECEx EUT 20.0024X.

Table with maximum power dissipation values for EJBC series enclosures.

The temperature classes and maximum surface temperatures of control and monitoring unit enclosures depend on the size of the enclosure, ambient temperature and power dissipation inside the enclosure.

Enclosure type	Maximum power dissipation (Watts) with ambient temperature of **+40°C (+55°C)**			
	T6 class without indicator lights. Only indicator LEDs are allowed.	T5 class with indicator lights and/or LEDs	T5 class without indicator lights. Only indicator LEDs are allowed.	T4 class without indicator lights and/or LEDs
EJBC-45	140W (105W)	140W (105W)	240W (180W)	480W (360W)
EJBC-45B	120W (90W)	120W (90W)	210W (160W)	430W (320W)
EJBC-5	210W (160W)	210W (160W)	315W (235W)	600W (450W)
EJBC-5B	170W (130W)	170W (130W)	250W (190W)	480W (360W)

ELECTRICAL FEATURES

Rated voltage:	24 / 1000 Vac	12 / 250 Vdc
Max. current on contacts and fuses:	400 A	
Rated frequency:	50 / 60Hz	
Max. wattage for lamps:	5 W (for Ta +40°C) 3 W (for Ta +55°C)	

GENERAL INSTALLATION INFORMATION

The maximum power dissipation inside the enclosure depends on the maximum current on contacts and fuses, the size of the enclosure, the temperature class (or maximum surface temperature for 2GD category) and ambient temperature, as specified in the maximum power dissipation tables (see previous page).
The maximum power dissipation must not exceed the values given in the table when non-'Ex i' components and 'Ex i' components (with 1.1W maximum power dissipation) are installed together.
The maximum power dissipation possible inside the enclosure will also depend on the maximum power dissipation of terminals, contacts and cables; whatever the case, the current density value allowed in the enclosure is prescribed by EN 60439-1, IEC 60439-1.

Details of barrier mounting inside enclosures

The "omega" rail, in accordance with EN 60079-11, is suitable for mounting barriers inside 'Ex d' enclosures.
Barriers are mounted (according to the manufacturer's directions) 7.5 mm away from the base of the enclosure and are secured to the DIN rail with 2 earth terminals (nominal cross-sectional area 6-10 mm) and 2 standard terminals for omega rails (EN 60079-11).
Up to how many barriers can be installed in the enclosures will depend on the properties of the barriers in question; in addition, the maximum number of barriers must not exceed the limit allowed by the certificate in any case.

Associated equipment can also be mounted on a DIN rail; when it is mounted on the enclosure's internal mounting plate, reference must be made to the minimum prescribed distances. Whether mounted on a rail or mounting plate, associated equipment must meet the following requirements:

Separators

When separators are used, they must be appropriately sized; their thickness and fastening inside the enclosure must be suitably determined and separators must allow air to circulate inside the enclosure.

Incoming cables

Incoming cables for 'Ex i' circuits must be suitably labelled or the area around the entry must be coloured blue RAL 5015. 'Ex i' entries must be clearly identified

Installation of 'Ex i' and non-'Ex i' components inside the enclosure.

Ex d IIC certified enclosures complete with accessories can contain only Ex ia IIC associated equipment; in this case, the resulting version becomes Ex d [ia] IIC.

Connection of internal cables

Cables are connected inside the enclosure to the barriers in accordance with EN 60079-11, with one side for connecting 'Ex i' cables and the opposite side for connecting non-'Ex i' cables.
Connection in 'Ex i' circuits must be made using insulated cables only; there must be no connections to non-'Ex i' circuits and no more than one cable can be connected to a single terminal. 'Ex i' cables cannot be grouped together with non-'Ex i' cables; in addition, 'Ex i' cables and non-'Ex i' cables must be kept separated. The minimum distance between the 2 types of cables must be 8 mm. The minimum insulation level for non-'Ex i' cables must be greater than 1.5 kV; the minimum insulation level for 'Ex i' cables must be greater than 0.5 kV.

Internal connections

When routing cables belonging to 'Ex i' circuits, the cables must be identified in one of the following ways:

- cables must have blue insulation (as long as there are no other cables inside the enclosure with this colour).
- 'Ex i' cables must be kept separate from non-'Ex i' cables with blue cable raceways.
- 'Ex i' cables must be grouped together, using a tie, for example, and the area identified with a blue label.

  Warning 'Ex i' circuits

- cables for power circuits must have a cross-sectional area of at least 1.5 mm^2.
- 'Ex i' circuits must be kept at a distance of 50 mm from non-'Ex i' circuits.
- the earth connection must meet European standard EN 60079-14.

The number of items of equipment mounted inside the enclosures and their layout will vary based on the following:

- in accordance with EN 60079-1 and IEC 60079-1, the equipment contained inside the enclosure can be arranged in any way provided that at least 40% of the surface area of each section is left free.
- equipment must be set at a suitable distance to accommodate cable wiring.

Maximum dimensions of 'Ex ia' equipment that can be installed inside enclosures.

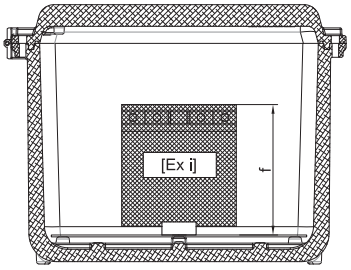

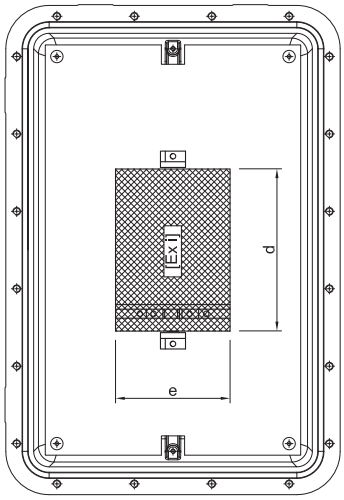

	d	e	f
EJBC-45	410	225	170
EJBC-45B	410	225	120
EJBC-5	480	280	220
EJBC-5B	480	280	150

Examples of installation of associated equipment - minimum distances.

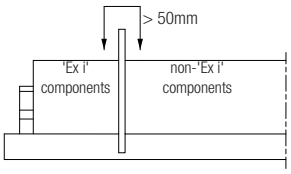

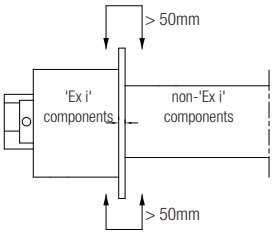

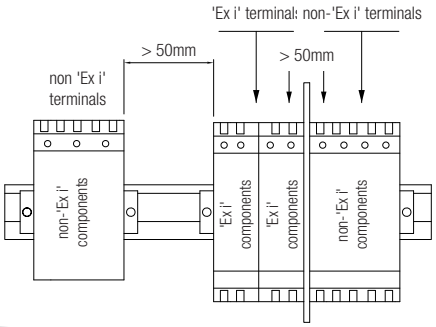

Example of interface unit (with associated equipment) complete with separator

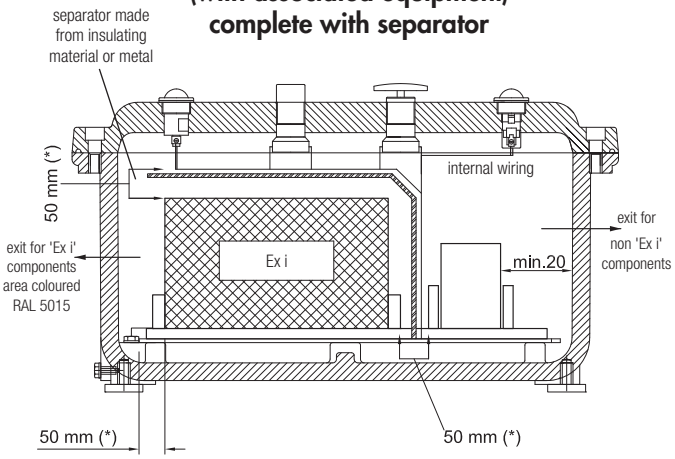

Example of interface unit without separator

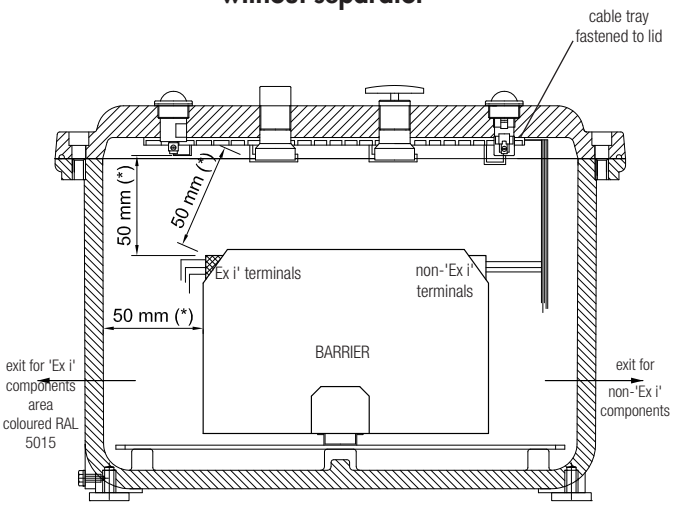

NOTES

(*) 50 mm is the minimum safe distance between 'Ex i' components and non-'Ex i' components (and/or conducting parts).

- The active and passive barriers that can be installed in the enclosures must have their own ATEX certificate.
- The maximum voltage entering barriers on non-'Ex i' circuits must be less than 250 V.

EJBC-... series Aluminium junction boxes gas group IIC

EJBC series junction boxes are used as enclosures for electrical equipment that requires a visual interface with the outside. Voltmeters, ammeters and other analogue and digital measuring instruments are typical examples of installations that require a window for taking direct readings. These enclosures are also used to house monitoring instruments such as infra-red photoelectric cells and twilight sensors that provide pulses for control and signalling equipment (opening/closing, alarms, etc....). Our technical department will decide what size enclosures to use based on your requirements and determine the internal layout so that all the dimensional and electrical parameters prescribed by the certificate are met. We can install equipment to your specifications within the technical limits allowed by the certificate and based on our standard control and signalling devices.

K-0253
Ø 90

K-0254
Ø 140

K-0255
Ø 180

DIMENSIONAL DRAWING OF ENCLOSURES WITH ROUND VIEWING WINDOWS

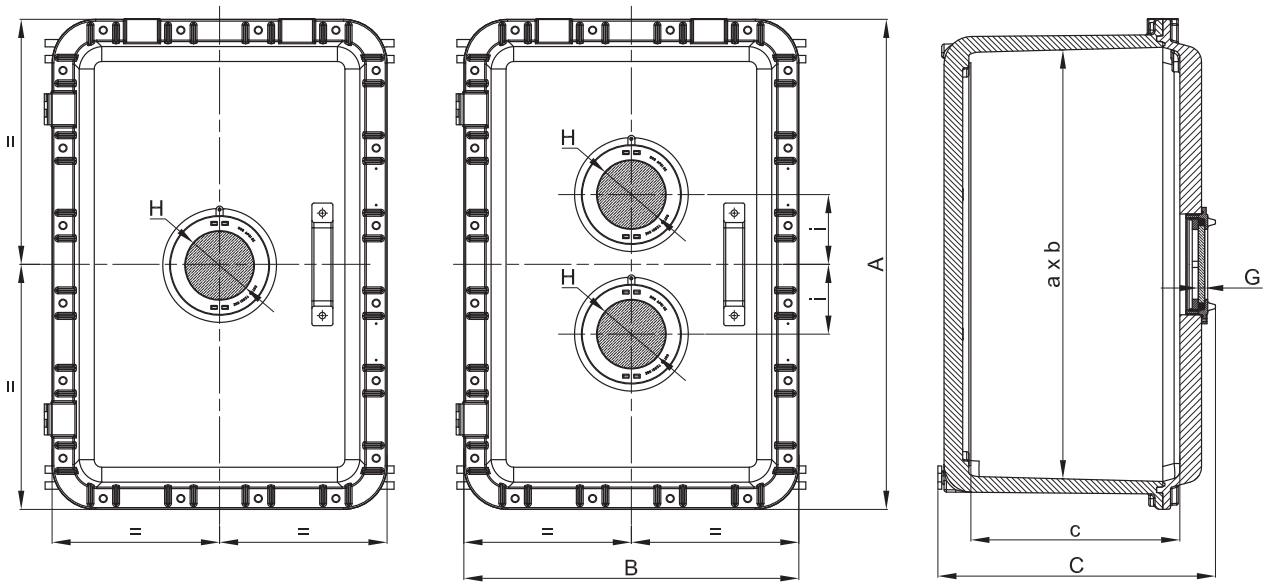

WINDOW DETAIL (cross-section)

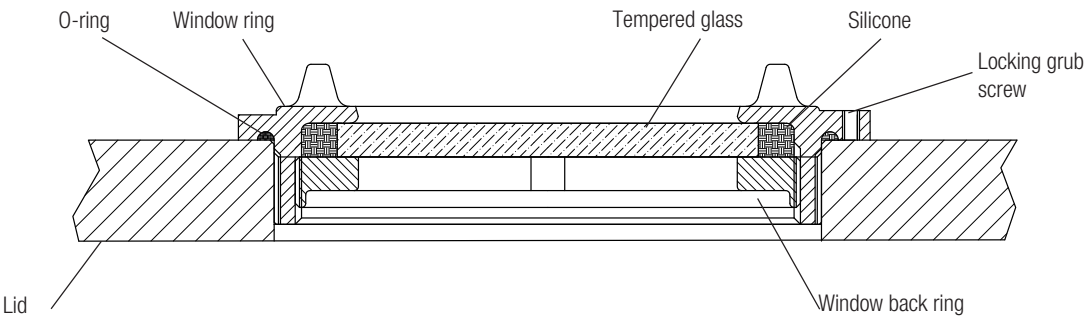

Code	Outside dimensions			Inside dimensions			N° of windows	Size of windows		
	A	B	C	a	b	c		H	G	i
EJBC-45/2W0	560	380	298	490	305	229	2	90	10	90
EJBC-45B/2W0	560	380	253	490	305	179	2	90	10	90
EJBC-45/1W2	560	380	298	490	305	229	1	140	12	-
EJBC-45B/1W2	560	380	253	490	305	179	1	140	12	-
EJBC-5/2W0	632	432	341	560	360	275	2	90	10	140
EJBC-5B/2W0	632	432	271	560	360	205	2	90	10	140
EJBC-5/1W2	632	432	341	560	360	275	1	140	12	-
EJBC-5B/1W2	632	432	271	560	360	205	1	140	12	-
EJBC-5/1W3	632	432	341	560	360	275	1	180	15	-
EJBC-5B/1W3	632	432	271	560	360	205	1	180	15	-

We can provide standard windows to meet your requirements for the various enclosure types for such purposes as viewing analogue or digital instruments, indicators of various kinds.

DIMENSIONAL DRAWING OF ENCLOSURES WITH RECTANGULAR WINDOWS (tempered glass).

Position of standard window in centre.
Non-standard window positions or dimensions on request.

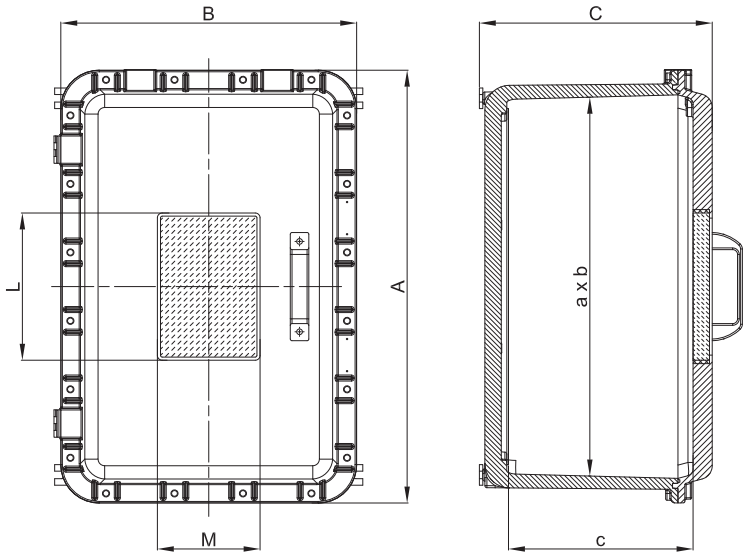

Code	Outside dimensions			Internal dimensions			Window size	
	A	B	C	a	b	c	M	L
EJBC-45/3020	560	380	298	490	305	229	200	300
EJBC-45B/3020	560	380	248	490	305	184	200	300
EJBC-5/3020	632	432	341	560	360	271	200	300
EJBC-5B/3020	632	432	271	560	360	201	200	300

ILLUSTRATION	DESCRIPTION	MODEL	FEATURES	CODE	KEY
	Internal mounting plates	EJBC-45/45B	Thickness 2.5mm Aluminium (BFE-...) Galvanized steel (BFE-...AC) Stainless steel (BFE-...SS)	**BFE-45**	ACCESSORY SPARE PART
		EJBC-5/5B		**BFE-5**	
	Breather and drain valve	Thread diameter ISO 7-R 3/8"	Material: stainless steel	**ECD-210S**	ACCESSORY SPARE PART
	Cable glands and unions		For models and codes, visit www.cortemgroup.com		ACCESSORY SPARE PART
	Sealed bushings		For models and codes, visit www.cortemgroup.com		ACCESSORY SPARE PART
	Lid-mounted control and signalling devices		For control and signalling device models and codes, see control and monitoring device chapter	**M-0...**	ACCESSORY SPARE PART
	N°2 hinges per enclosure	EJBC-...	Material: stainless steel	**218-9301**	SPARE PART
	Mounting brackets	EJBC-45/45B	Material: acero galvanizado	**K45-237**	SPARE PART
		EJBC-5/5B		**K5-237**	
	O-ring between body and lid	EJBC-45/45B	Material: red-coloured silicone	**K45-131/1S**	SPARE PART
		EJBC-5/5B		**K5-131/1S**	

Dimensional drawings of internal mounting plates and mounting brackets

Enclosures	Internal mounting plates				
	A	B	a	b	Code
EJBC-45 /45B	460	280	440	260	BFE-45
EJBC-5 /5B	530	330	500	300	BFE-5

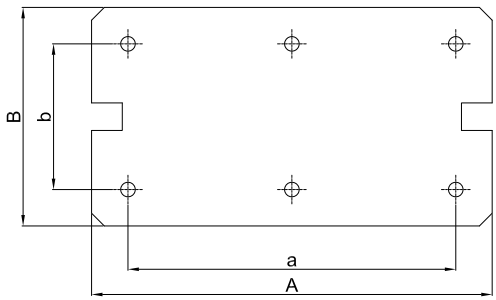
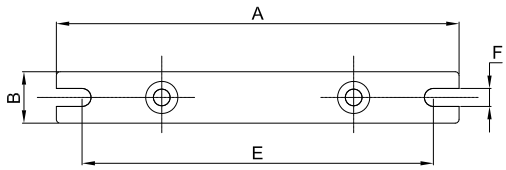
Enclosures	Mounting brackets				
	A	B	E	F	Code
EJBC-45 /45B	376	30	356	11	K45-237
EJBC-5 /5B	450	30	430	11	K5-237