computer C6 Wi-Fi

Computer C6 Wi-Fi, Power factor regulator

Code: R14831.

> Alarm relay: Yes
> Measurement Range (V): 400
> Power supply (Vac): 400 Vac
> Nr steps: 6
> Input current: ... / 5A
> Switching unit: Contactor

Description

The **Computer C Wi-Fi** series of regulators is designed for simple and effective regulation. Its high-contrast display can show up to 27 electrical parameters.
Its features are key to having a robust and reliable system, as well as to obtaining the necessary warnings and alarms for its proper monitoring and control:

- Up to 12 fully configurable alarms.
- Plug & Play.
- For easier preventive maintenance

Application

The **Computer C Wi-Fi** is the ideal regulator to compensate balanced installations, where ease of programming, robustness, precision, and maximum compensation control are required.
Its simple and intuitive programming system facilitates user installation and maintenance.

Creation date: 21/10/2026 - CIRCUTOR, SAU reserves the right to make technical changes or modify the content/images of this document without prior notice, in order to improve its reliability, functionality, design or for other reasons.
It accepts no liability for any errors, inaccuracies or possible lack of information in this document.

computer C6 Wi-Fi

Fast power factor regulator

Code: R14831.

Specifications

AC power supply

Installation category	CAT III 300 V
Consumption	13 VA
Frequency	50 ... 60 Hz
Nominal voltage	400 V ~ (±10 %)

Mechanical characteristics

Size (mm) width x height x depth	144 x 144 x 54.85 (mm)
Envelope	Plastic V0 self-extinguishing
Fastening	Panel
Weight (kg)	0,43

Environmental characteristics

Protection class	IP 30 / Front Panel: IP 40 IK 08
Relative humidity (without condensation)	5 ... 95 %
Storage temperature	-20 ... +70 °C
Working temperature	-20 ... +60 °C

Current measurement circuit

Nominal current (In)	... / 5 A
Phase current measuring range	0.05 ... 5A
Permanent overload	+ 20%
Connection	Connect preferably to phase L1

Standards

Electrical safety, Maximum height (m)	2000
Electrical safety, Contamination level/class	Pollution resistance 2
Standards	IEC 61010, IEC 61000-2-30, IEC 61000-6-4, IEC 61000-6-2

Electrical safety

Insulation	Double-insulated electric shock protection class II (IEC 61010-1)

User interface

Resolution of the display	3 digits
Keyboard	3 keys

Digital relay outputs

Quantity	6 + 1 (Alarm)
Maximum current	1 A~

Creation date: 21/10/2026 - CIRCUTOR, SAU reserves the right to make technical changes or modify the content/images of this document without prior notice, in order to improve its reliability, functionality, design or for other reasons.
It accepts no liability for any errors, inaccuracies or possible lack of information in this document.

computer C6 Wi-Fi

Fast power factor regulator

Code: R14831.

Maximum open contact voltage	250 V~
Electrical life (at maximum load)	$1x10^5$ cycles
Mechanical life	$1x10^7$ cycles
Maximum switching capacity	250 W

Measurement accuracy

Phase angle φ	2 % ± 1 digit
Phase current measurement	1%
Phase voltage measurement	1%

computer C Wi-Fi
Power factor controller with communications

CODE	TYPE	Switching unit	Nr steps	Input current
R14831.	computer C6 Wi-Fi	Contactor	6	... / 5A
R148310020000	computer C6 Wi-Fi	Contactor	6	... / 5A
R14842.	computer C12 Wi-Fi	Contactor	12	... / 5A
R148420020000	computer C12 Wi-Fi	Contactor	12	... / 5A

Compatible with Anti Reactive Surveillance System - VAR. Programming via the MyConfig app.

Creation date: 21/10/2026 - CIRCUTOR, SAU reserves the right to make technical changes or modify the content/images of this document without prior notice, in order to improve its reliability, functionality, design or for other reasons.
It accepts no liability for any errors, inaccuracies or possible lack of information in this document.

computer C6 Wi-Fi

Fast power factor regulator

Code: R14831.

Dimensions

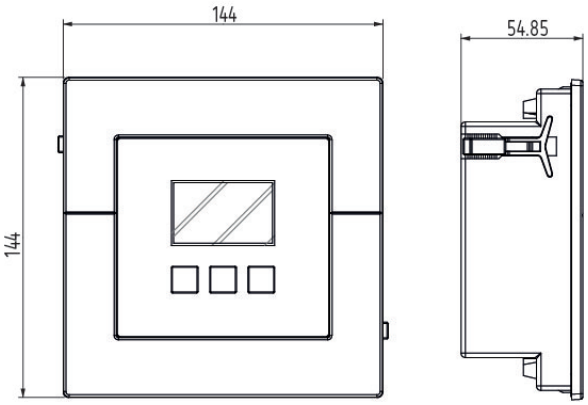

Connections

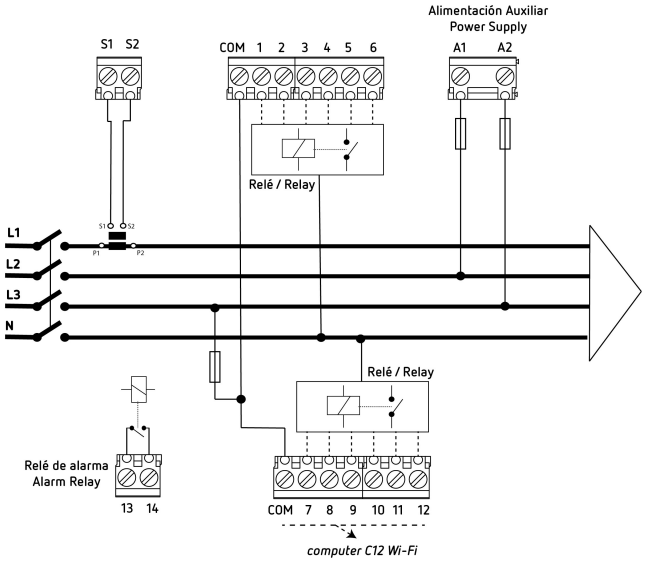

Creation date: 21/10/2026 - CIRCUTOR, SAU reserves the right to make technical changes or modify the content/images of this document without prior notice, in order to improve its reliability, functionality, design or for other reasons.
It accepts no liability for any errors, inaccuracies or possible lack of information in this document.