Balancing valve with flow meter

132 series

CALEFFI

01149/17 GB

replaces dp 01149/08 GB

Function

The balancing valve is a hydraulic device that accurately regulates the flow rate of heating medium supplied to system terminals
The correct balancing of hydraulic systems is essential to guarantee the system operation according to its design specifications, high thermal comfort and low energy consumption.
This particular series of valves is equipped with a flow meter for a direct reading of the regulated flow rate. The flow meter is housed in a by-pass circuit on the valve body and can be shut off during normal functioning, allowing fast and easy balancing of circuits without the need for differential pressure gauges.
The balancing valve (in the threaded version) is equipped with a hot pre-formed shell insulation to ensure a perfect thermal performance in case of use both with hot and chilled water.
PATENT PENDING.

Only for threaded version

Product range

132 series	Balancing valve with flow meter, threaded version	sizes 1/2", 3/4", 1", 1 1/4", 1 1/2" and 2"
132 series	Balancing valve with flow meter, flanged version	sizes DN 65, DN 80 and DN 100

Technical specifications

series	132 threaded	132 flanged
Materials		
Body:	brass EN 12165 CW617N	cast iron GJL 250 EN 1651
Ball	brass EN 12164 CW614N	brass EN 12164 CW614N, chrome plated
Ball control stem:	brass EN 12164 CW614N, chrome plated	brass EN 12164 CW614N
Ball seal seat:	PTFE	PTFE
Control stem guide:	PSU	
Seals:	EPDM	EPDM
Flow meter		
Body:	brass EN 12165 CW617N	brass EN 12165 CW617N
Headwork:	brass EN 12164 CW614N	brass EN 12164 CW614N
Obturator stem:	brass EN 12164 CW614N, chrome plated	brass EN 12164 CW614N, chrome plated
Springs:	stainless steel EN 10270-3 (AISI 302)	stainless steel EN 10270-3 (AISI 302)
Seals:	EPDM	EPDM
Flow meter float:	PSU	PSU
Indicator cover:	PSU	PSU
Performance		
Medium:	water, glycol solutions	water, glycol solutions
Max. percentage of glycol:	50%	50%
Max. working pressure:	10 bar	10 bar
Working temperature range:	-10–110°C	-10–110°C
Flow rate scale unit of measurement	l/min	l/min
Accuracy:	±10%	±10%
Control stem angle of rotation:	90°	90°
Operating wrench:	1/2"–1 1/4": 9 mm 1 1/2" and 2": 12 mm	with knob
Connections:	threaded 1/2"–2" F (ISO 228-1)	flanged DN 65, DN 80, DN 100
Insulation		
Material:	closed cell expanded PE-X	
Thickness:	10 mm	
Density:	- inner part: 30 kg/m³ - outer part: 50 kg/m³	
Thermal conductivity (DIN 52612):	- at 0°C: 0,038 W/(m•K) - at 40°C: 0,045 W/(m•K)	
Coefficient of resistance to water vapour (DIN 52615):	> 1.300	
Working temperature range:	0–100°C	
Reaction to fire (DIN 4102):	class B2	
Certification	DHW	–

Dimensions

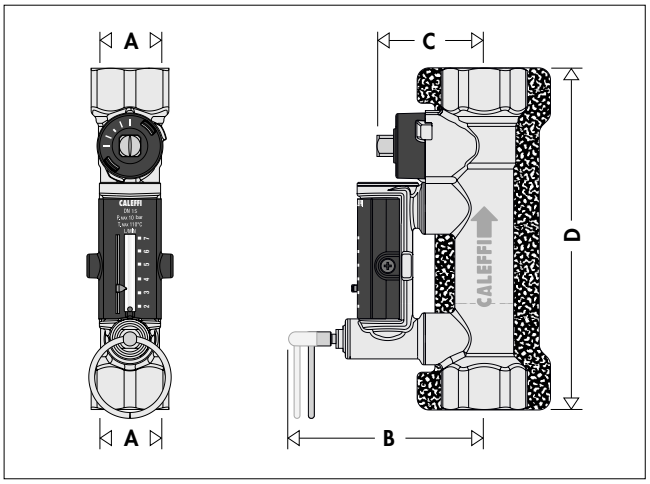

Code	A	B	C	D	Mass (kg)
132402	1/2"	83,5	45,5	145	0,80
132512	3/4"	83,5	45,5	145	0,74
132522	3/4"	83,5	45,5	145	0,74
132602	1"	85	47	158	0,96
132702	1 1/4"	88	50	163,5	1,19
132802	1 1/2"	91	56,5	171	1,47
132902	2"	96,5	62	177	2,00

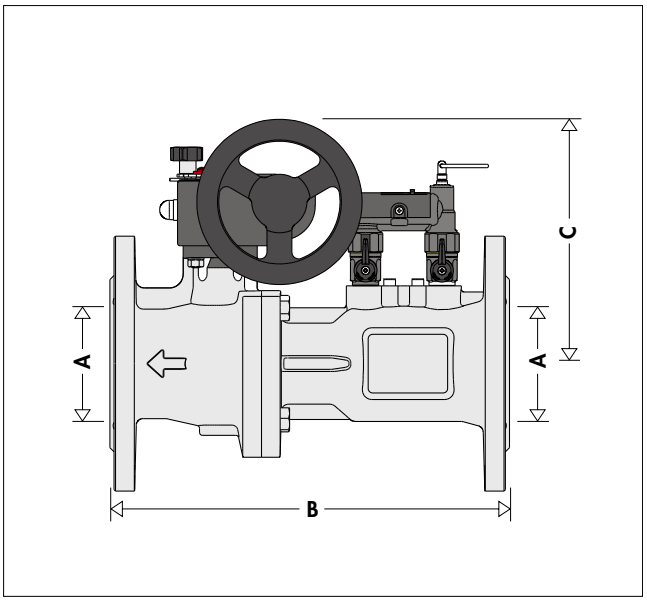

Code	A	B	C	Mass (kg)
132060	DN 65	290	177	14,6
132080	DN 80	310	185	17,8
132100	DN 100	350	201	24,4

Advantages of balanced circuits

Balanced circuits have the following principal benefits:

1. The terminals of the system operate correctly in heating, cooling and dehumidification without wastage and provide better comfort.
2. The pumps run in their zone of highest efficiency, thus reducing the risk of overheating and excessive wear.
3. Too high medium speeds, which can result in noise and abrasion, are avoided.
4. The differential pressures acting on the regulation valves are limited in value, thus preventing faulty operation.

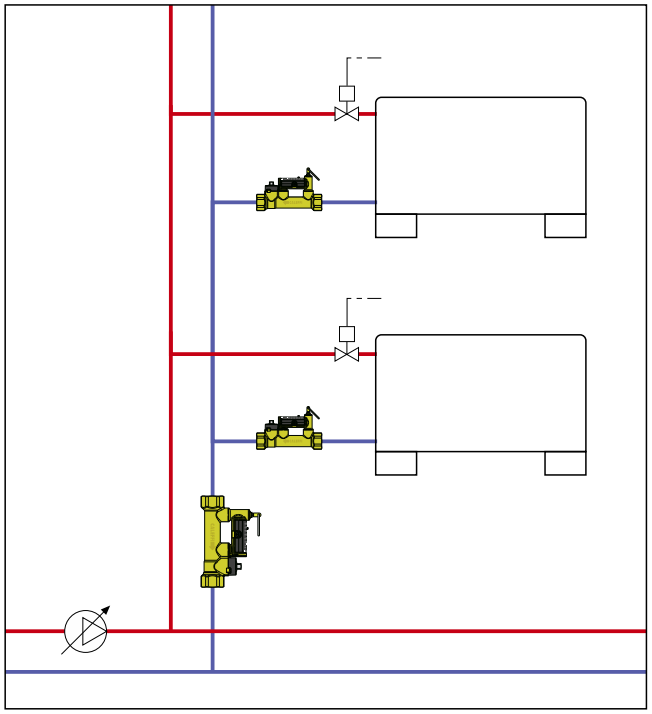

Operating principle

The balancing valve is a hydraulic device that makes it possible to regulate the medium flow rate passing through it.
The regulating action is performed by a ball obturator (1), operated by a control stem (2). The flow rate is controlled by means of a flow meter (3) housed in a by-pass circuit, on the valve body, that can be shut off during normal functioning. The flow rate value is indicated by a metal sphere (4), sliding within a transparent guide (5), marked alongside by a graduated scale (6).

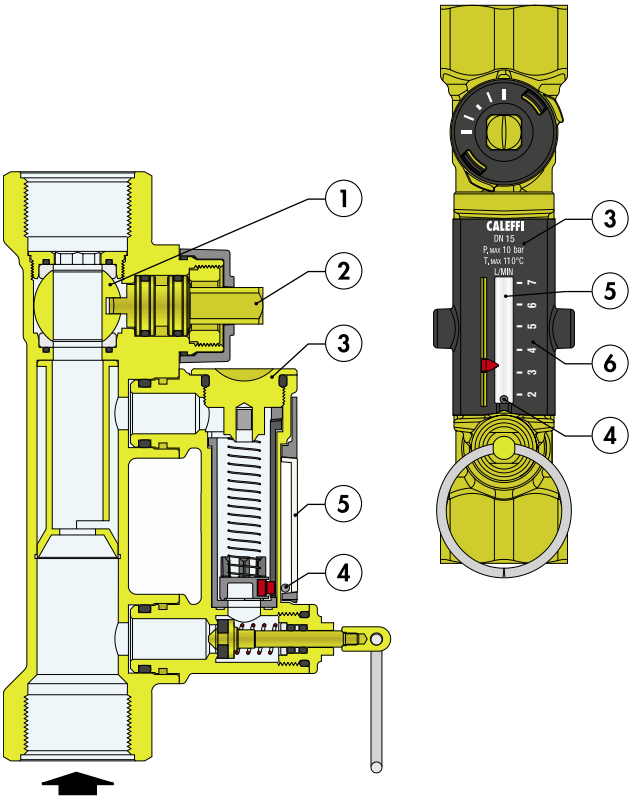

Construction details

Flow meter for flow rate measurement

The flow rate measurement is provided directly by a flow meter, housed in a by-pass circuit on the valve body, which can be automatically excluded during normal function.

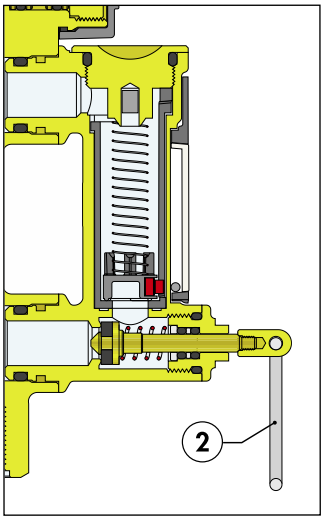

The use of a flow meter greatly simplifies the process of system balancing, since the flow rate can be measured and controlled at any time and there is no need for differential pressure gauges or reference charts.

Furthermore, this means it is no longer necessary to calculate valve presetting at the system design stage.
The benefits of this solution translate into significant time and cost savings, given that the calibration of conventional balancing devices, performed by qualified technicians, is a complex and expensive procedure.

Flow meter obturator

The obturator (1) opens and shuts the circuit between the flow meter and the valve. The obturator can be easily opened by pulling the ring (2), and is closed automatically, after completion of the procedure, by theinternal spring (3). The spring and the EPDM seal (4) guarantee over time a perfect circuit closure during normal functioning
The operating ring (2) is made of a material with low thermal conductivity to avoid burns if the flow meter is opened while hot medium is passing through the valve.

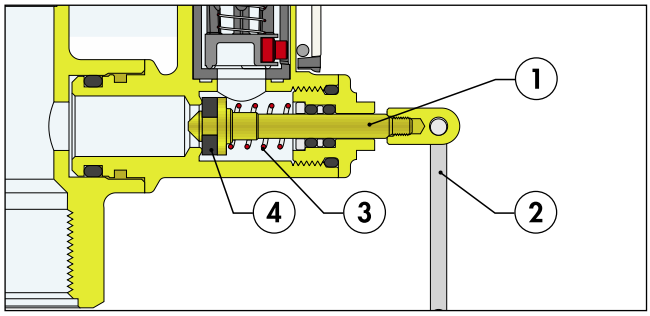

Ball/magnet indicator

The ball (8) that indicates the flow rate value is not in direct contact with the thermal medium passing through the flow meter.
Thanks to an effective and innovative measuring system, the ball slides up and down in a cylinder (5) that is actually separate from the body of the flow meter. The ball is moved by a magnet (7) fixed to a float (6). This means that the flow rate indication system remains perfectly clean and provides reliable readings over time.

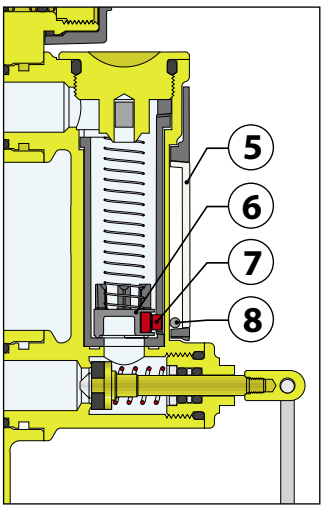

Complete closing and opening of the valve

The valve can be fully closed or fully open. On the threaded version, a slot on the obturator stem indicates the status of the valve.
When the control stem is turned clockwise 90° to the end stop and the slot is perpendicular to the valve axis, this indicates that the valve is fully closed (A); when the stem is turned 90° anti-clockwise to the end stop and the slot is parallel with the valve axis, this indicates that the valve is fully open (B).

Fully closed

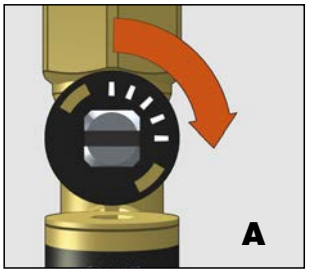

Fully open

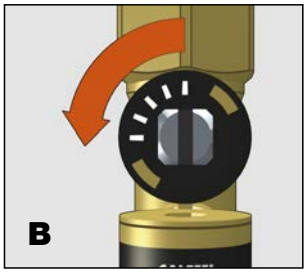

In the flanged version, the complete opening and closing of the valve is accomplished with the knob provided, as in the figure. It is possible to lock the adjustment position by screwing the knob provided all the way down.

Fully closed

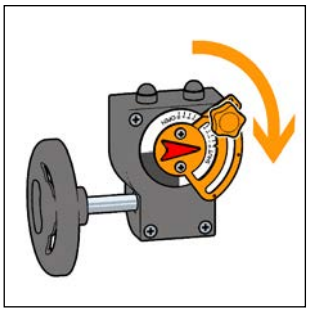

Fully open

Insulation

The 132 series balancing valve, threaded version, is supplied complete with hot pre-formed insulation. This system ensures not only perfect thermal insulation, but also the tightness required to prevent water vapour entering the device from the ambient. For this reason, this type of insulation may also be used in chilled water circuits as it prevents condensation from forming on the surface of the valve body.

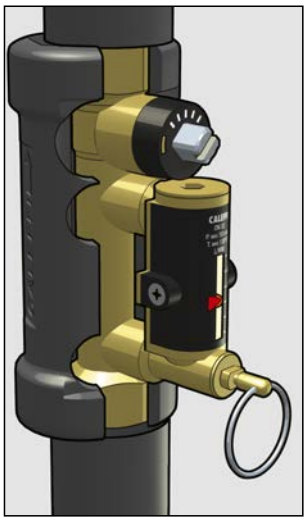

Hydraulic characteristics

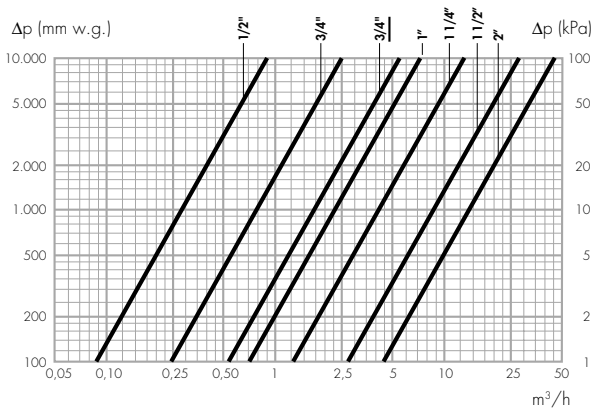

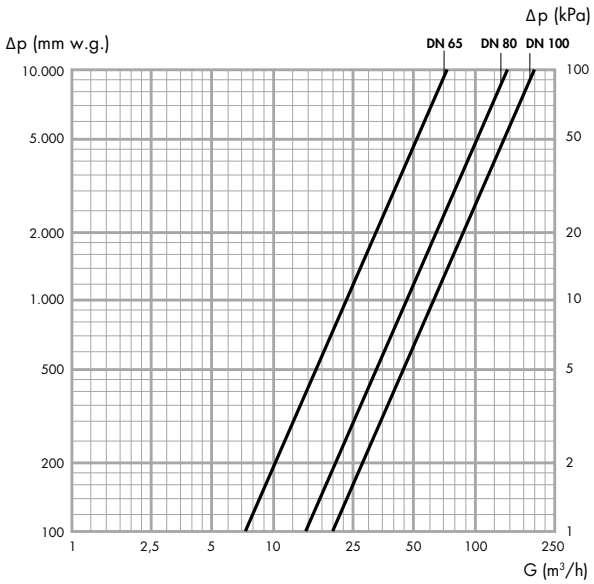

Code	132402	132512	132522	132602	132702	132802	132902
DN	15	20	25	1/2"	30	40	50
Size	1/2"	3/4"	3/4"	1"	1 1/4"	1 1/2"	2"
Flow rates (l/min)	2–7	5–13	7–28	10–40	20–70	30–120	50–200
Kv (m³/h)	0,9	2,5	5,4	7,2	13,1	27,8	46,4

Kv valves fully open

Part number	132060	132080	132100
Size	DN 65	DN 80	DN 100
Flow rates (m³/h)	6–24	8–32	12–48
Position	Kv (m³/h)		
1	0	0,8	1,1
2	1	3,6	3,8
3	2,6	10,7	11,8
4	6,6	18,1	22,4
5	10,7	30,3	37
6	16,3	44,8	58,4
7	27,3	65,2	77
8	37,6	91,6	108,7
9	60,5	118,5	151,3
10 (Kvs)	75,4	141,4	209

Correction for liquids with different densities

For mediums with viscosity ≤3°E, for example water and glycol mixtures, having a density different from that of water at 20°C (ρ = 1 kg/dm³) to which the diagram refers, it results that:

the head loss (for sizing the pump) is determined by: $\Delta p_{real} = \Delta p_{reference} \times \rho_{f.with\ glycol}$;

- the variation in flow rate measurement remains within the specified precision range (±10%) for glycol percentages of up to 50%.

Installation

Install the balancing valve in such a way to ensure free access to the flow meter obturator, control stem and flow rate indicator

We recommend to install straight sections of pipe as shown in the illustration below to ensure accurate flow measurement

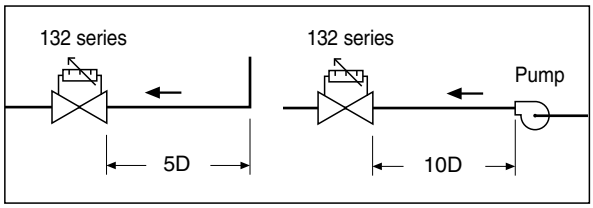

The valve can be installed in any position by respecting the flow direction shown on the valve body The valve can be installed either horizontally or vertically.

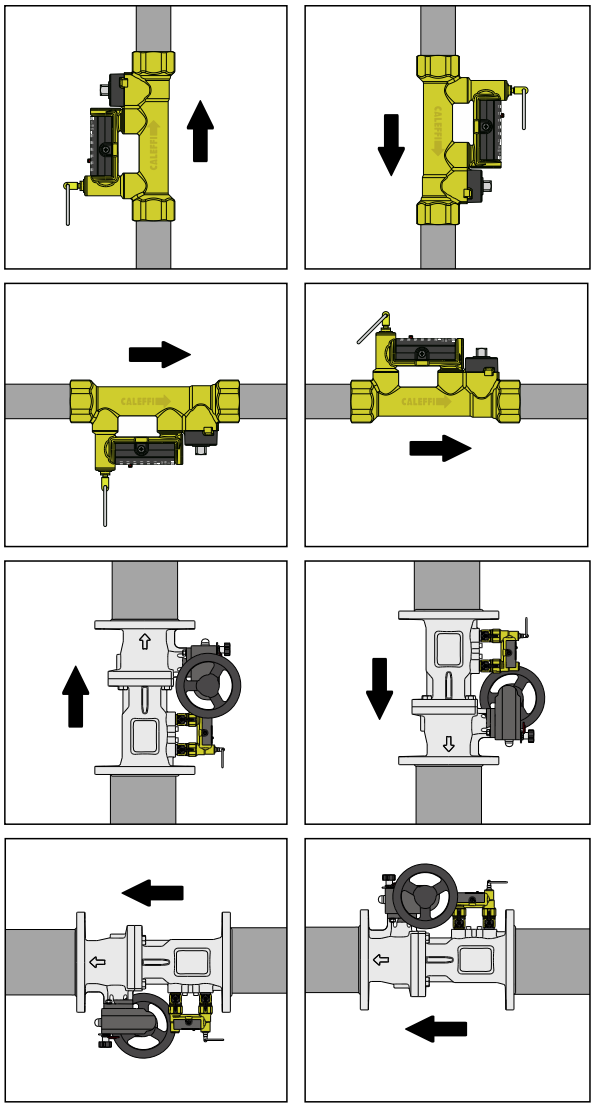

Flow rate regulation, threaded version

The flow rate is adjusted by carrying out the following operations:

A. With the aid of the indicator (1), mark the reference flow rate at which the valve has to be set.
B. Use the ring (2) to open the obturator that shuts off the flow of medium in the flow meter (3) under normal operating conditions.

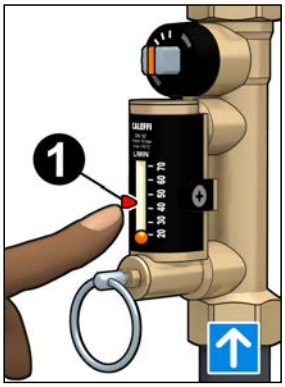

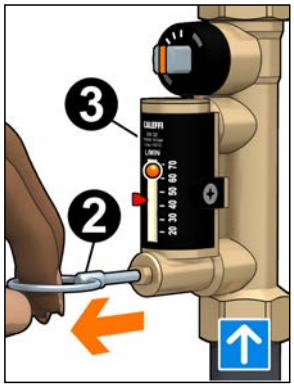

C. Keeping the obturator open, use a wrench on the valve's control stem (4) to adjust the flow rate. The flow rate is indicated by a metal ball (5) running inside a transparent guide (6) along a graduated scale in l/min.

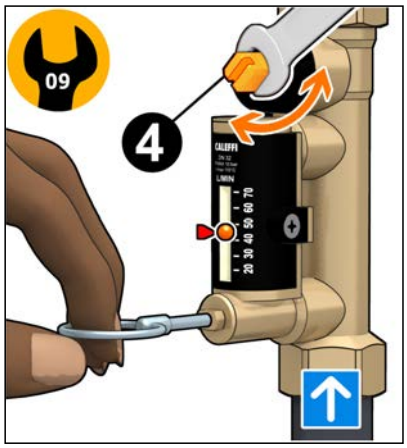

D. When the balancing operation is ended, release the ring of the flow meter obturator which, thanks to an internal spring, will automatically go back into the closed position.

Flow rate regulation, flanged version

The flow rate is adjusted by carrying out the following operations:

A. With the aid of the indicator (1), mark the reference flow rate at which the valve has to be set.
B. Open the ball shut-off valves (2), turning them anticlockwise. Pull the ring that acts on the obturator (3), allowing the passage of medium in the flow meter (4).

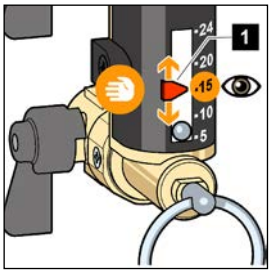

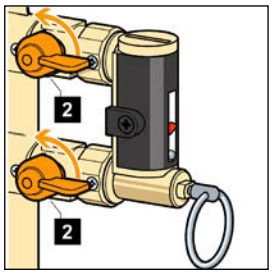

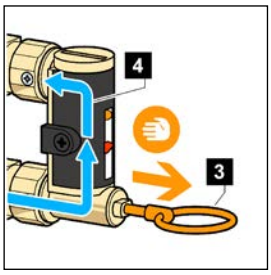

C. Still pulling the ring, turn the knob provided (5) to adjust the flow rate. It is indicated by a metal ball (6) that runs inside a transparent guide (7) marked by a graduated scale in m^3/hour alongside it. If it is necessary to lock the setting position, use the knob on the indicator, tightening it fully.

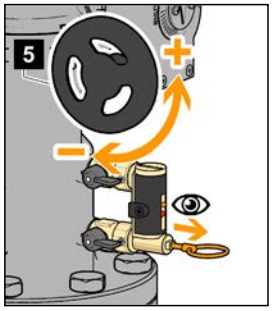

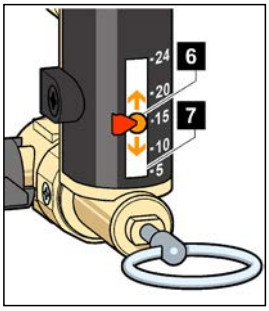

When the balancing operation is ended, release the ring (3) of the flow meter obturator which, thanks to an internal spring, will automatically go back into the closed position. Close the ball shut-off valves (2).

E. On completing the adjustment, the indicator (1) can be used to keep the setting in the memory, in case checks need to be made over time.

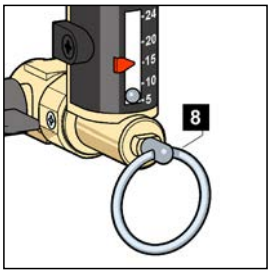

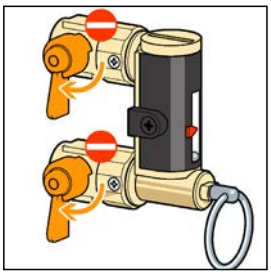

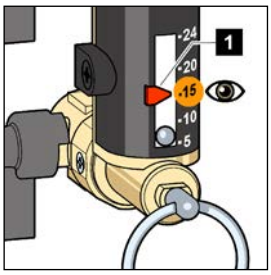

Application diagrams

The balancing valve with the flow meter should preferably be installed on the circuit return pipe.

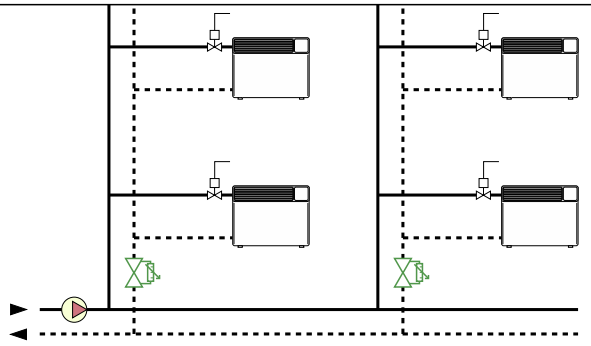

To adjust the flow rate to each riser

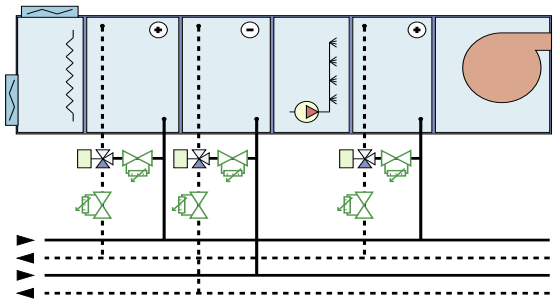

To balance circuits serving air conditioning units

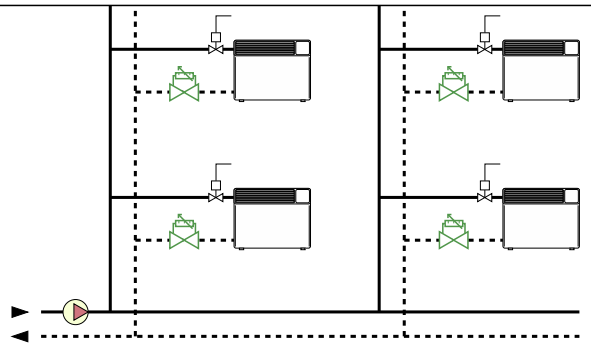

To adjust the flow rate to each terminal

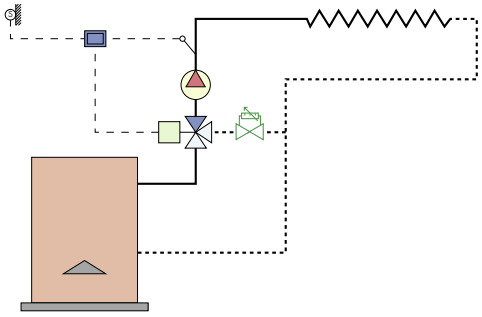

To balance the by-pass line of outside compensated temperature regulation circuits

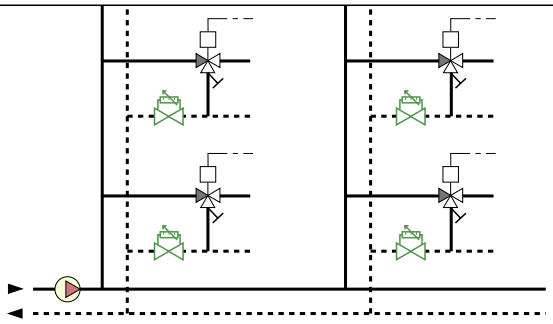

To balance zone branches in circuits with three-way valves

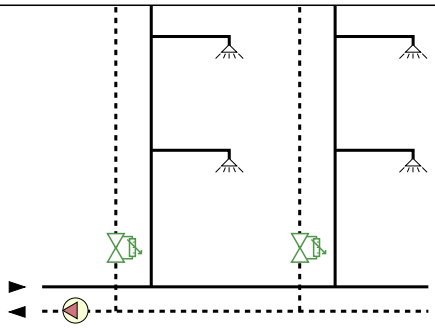

To balance sanitary water distribution circuits

SPECIFICATION SUMMARY

132 series

Balancing valve with flow meter. Threaded connections 1/2" (from 1/2" to 2") F x F (ISO 228-1). Brass body. Brass ball. Brass ball control stem, chrome plated. PTFE ball seal seat. PSU control stem guide. Brass flow meter body and headwork. Brass flow meter obturator control stem, chrome plated. Stainless steel flow meter springs (AISI 302). PSU flow meter float and indicator cover. EPDM seals. With pre-formed shell insulation in expanded closed cell PE-X. Medium water and glycol solutions. Maximum percentage of glycol 50%. Maximum working pressure 10 bar. Working temperature range -10–110°C. Flow rate scale unit of measurement in l/min. Accuracy ±10%. Control stem angle of rotation 90°.

132 series flanged version

Balancing valve with flow meter. Flanged DN 65 connections (from DN65 to DN 100). Cast iron body. Brass ball. Brass ball control stem, chrome plated. PTFE ball seal seat. PSU control stem guide. Brass flow meter body and headwork. Brass flow meter obturator control stem, chrome plated. Stainless steel flow meter springs (AISI 302). PSU flow meter float and indicator cover. EPDM seals. Medium water and glycol solutions. Maximum percentage of glycol 50%. Maximum working pressure 10 bar. Working temperature range -10–110°C. Flow rate scale unit of measurement in m^3/h. Accuracy ±10%. Adjustment system angle of rotation 90°.

We reserve the right to make changes and improvements to the products and related data in this publication, at any time and without prior notice.

CALEFFI Hydronic Solutions

Caleffi S.p.A.
S.R. 229 no. 25 · 28010 Fontaneto d'Agogna (Novara) · Italy
Tel. +39 0322 8491 · Fax +39 0322 863723
info@caleffi.com · www.caleffi.com
© Copyright 2017 Caleffi