BROOKS® INSTRUMENT

Beyond Measure

Sho-Rate™ Models 1250 & 1255

Engineered for accuracy, repeatability, and seamless panel installation.

Sho-Rate™ Models 1250 and 1255 are precision-engineered low-flow glass tube variable area flowmeters designed for reliable measurement of both liquids and gases in laboratory, industrial, and OEM applications. Available in compact 65 mm or extended 150 mm scale lengths, these meters provide direct, accurate readings at reference conditions and are engineered for easy integration into panels and systems. With a selection of stainless steel or Aluminum end blocks, inlet or outlet valve options, and Buna or Viton O-rings the 1250 and 1255 deliver the versatility and dependable performance engineers need for low-flow measurement applications.

Features	Benefits
Ideal for Panel-Mount	Rotating lens provides a 180° magnified view for clear, precise readings, reducing operator error
Versatile Measurement Options	Standard direct-read or millimeter scales for air, nitrogen, and water at reference conditions. Additional scales available for oxygen, CO_2, helium, argon, and other gases.
Flexible Configurations	Choose from aluminum or stainless steel fittings and valves, with Buna-N or Viton® seals to meet diverse process requirements
Accurate, Repeatable Performance	Accuracy up to ±3–5% of full scale with repeatability of 0.25% ensures consistent, reliable flow measurement
Quick Maintenance	EZ-CHANGE™ design enables fast interchangeability of tube assemblies, minimizing downtime during service or reconfiguration
Durability in Demanding Environments	Built with borosilicate glass and available stainless steel or aluminum end blocks, ensuring long service life in laboratory or light industrial settings

Product Specifications

	1250	1255
Performance		
Accuracy	±5% F.S. at reference conditions[1] (for listed gases)	±3% F.S. at reference conditions[1] (for listed gases)
Repeatability	0.25% F.S.	
Pressure / Temperature	200 psig (33°F - 250°F) / 13.8 bar (1°C - 121°C)	
Materials of Construction	Borosilicate Glass, Aluminum, 316 Stainless Steel, Clear Polycarbonate, Teflon®	
End Block Options	Stainless Steel and Aluminum	
Packing Material	Viton® fluoroelastomers, Buna	
Float Materials	Glass, Sapphire, Stainless Steel, Carboloy®, Tantalum	
Connection Materials	Stainless Steel and Aluminum	
Connection Options	1/8" NPT (w/locknuts) - Aluminum and Stainless Steel 1/4" NPT (w/locknuts) - Stainless Steel only	
Valve Options	Cartridge Valve	
Valve Materials	Stainless Steel and Brass	

[1] Reference conditions: 70°F (21.1°C) / 14.7 psia (1 BarA)

Capacity Table: Model 1250

Model 1250 - Air						
Tube No.	Float	Float Diameter	ml/mim	LPM	CCM	SCFH
D6011	G	1/8"	---	---	2 - 50	---
D6023	ST	1/8"	---	---	10 - 300	---
D6032	S	1/8"	---	---	25 - 550	0.1 - 1.2
D6042	S	1/8"	---	0.1 - 1	120 - 1,200	---
D6051	G	3/16"	---	0.1 - 2.5	---	0.25 - 5.5
D6053	ST	3/16"	---	0.2 - 5	---	---
D6073	ST	1/4"	---	0.2 - 11.4	---	2.5 - 25
D6092	S	1/4"	---	1 - 20	---	---
D6093	ST	1/4"	---	1 - 30	---	4 - 60
D6104	C	1/4"	---	2 - 60	---	---
D6013	ST	1/8"	---	---	0 - 150	---
D6021	G	1/8"	---	---	5 - 100	---
D6083	ST	1/4"	---	---	---	4 - 40
D6052	S	3/16"	---	---	0 - 5000	---

Model 1250 - Nitrogen						
Tube No.	Float	Float Diameter	ml/mim	LPM	CCM	SCFH
D6021	G	1/8"	4 - 100	---	---	---
D6032	S	1/8"	20 - 560	---	---	0.1 - 1.2
D6051	G	3/16"	---	---	---	0.5 - 5
D6053	ST	3/16"	---	---	---	0.4 - 10
D6063	ST	3/16"	---	---	---	0.5 - 16
D6081	G	1/4"	---	---	---	2 - 20
D6104	C	1/4"	---	---	---	13 - 130
D6013	ST	1/8"	---	---	15 - 150	---
D6053	ST	3/16"	---	---	500 - 5,000	---
D6081	G	1/4"	---	1 - 10	---	---

Model 1250 - Water						
Tube No.	Float	Float Diameter	ml/mim	CCM	GPM	GPH
D6053	ST	3/16"	4 - 140	4 - 140	---	---
D6073	ST	1/4"	---	---	---	0.2 - 5
D6093	ST	1/4"	---	---	---	0.5 - 14
D6101	G	1/4"	---	25 - 575	---	---
D6105	T	1/4"	---	50 - 2000	---	---
D6105	T	1/4"	---	---	.02 - 0.5	---

Model 1250 - Oxygen						
Tube No.	Float	Float Diameter	ml/mim	LPM	CCM	SCFH
D6105	S	3/16"	---	0.3 - 3	---	---

Model 1250 - Hydrogen						
Tube No.	Float	Float Diameter	ml/mim	LPM	CCM	SCFH
D6011	G	1/8"	---	---	5 - 115	---
D6052	S	3/16"	---	1 - 10	---	---

Model 1250 - Argon						
Tube No.	Float	Float Diameter	ml/mim	LPM	CCM	SCFH
D6051	G	3/16"	---	0 - 2	---	---

Model 1250 - Carbon Dioxide						
Tube No.	Float	Float Diameter	ml/mim	LPM	CCM	SCFH
D6042	S	1/8"	---	---	100 - 1,000	---

Float Material Key
(G) Glass
(S) Sapphire
(ST) Stainless Steel
(C) Carboloy
(T) Tantalum

Capacity Table: Model 1255

Model 1255 - Air						
Tube No.	Float	Float Diameter	ml/mim	LPM	CCM	SCFH
D1022	S	1/8"	---	---	4 - 160	---
D1032	ST	1/8"	---	---	---	.05 - 1.15
D1033	ST	1/8"	---	---	30 - 850	---
D1043	ST	1/8"	---	0.06 - 1.7	---	---
D1052	S	3/16"	---	0.05 - 3	---	0.1 - 6
D1082	S	1/4"	---	1 - 30	---	---
D1084	C	1/4"	---	1 - 50	---	---
D1021	G	1/8"	2 - 100	---	2 - 100	---
D1032	S	1/8"	---	---	20 - 550	---
D1053	ST	3/16"	---	---	100 - 4,500	---
D1063	ST	3/16"	---	0.1 - 6.6	---	---
D1085	T	1/4"	---	---	2,000 - 66,000	---

Model 1255 - Nitrogen						
Tube No.	Float	Float Diameter	ml/mim	LPM	CCM	SCFH
D1021	G	1/8"	---	---	2 - 100	---
D1041	G	1/8"	20 - 900	---	---	---
D1071	G	1/4"	---	0.1 - 9	---	0.5 - 20
D1081	G	1/4"	---	---	---	---

Model 1255 - Water						
Tube No.	Float	Float Diameter	ml/mim	LPM	CCM	GPM
D1053	ST	3/16"	---	---	2 - 130	---
D1083	ST	1/4"	---	0.1 - 1.3	---	---

Model 1255 - Oxygen						
Tube No.	Float	Float Diameter	ml/mim	LPM	CCM	SCFH
D1054	C	3/16"	---	0.2 - 5	---	---
D1072	S	1/4"	---	---	---	2 - 24

Float Material Key
(G) Glass
(S) Sapphire
(ST) Stainless Steel
(C) Carboloy
(T) Tantalum

Capacity Table: Model 1250

Millimeter				
Tube No.	Float	Float Diameter	Air (CCM)	Water (CCM)
R6011	G	1/8"	50	---
R6012	S	1/8"	75	---
R6013	ST	1/8"	153	---
R6014	C	1/8"	278	---
R6021	G	1/8"	103	---
R6022	S	1/8"	160	---
R6023	ST	1/8"	298	---
R6024	C	1/8"	498	---
R6031	G	1/8"	400	---
R6032	S	1/8"	550	---
R6033	ST	1/8"	855	21.4
R6034	C	1/8"	1275	35.4
R6041	G	1/8"	900	18.2
R6042	S	1/8"	1200	29.6
R6043	ST	1/8"	1800	50.1
R6044	C	1/8"	2620	76.1
R6051	G	3/16"	2580	55
R6052	S	3/16"	3350	85
R6053	ST	3/16"	5030	140
R6054	C	3/16"	7270	215
R6061	G	3/16"	3840	90
R6062	S	3/16"	5080	130
R6063	ST	3/16"	7510	220
R6064	C	3/16"	10700	325
R6071	G	1/4"	6000	130
R6072	S	1/4"	7790	200
R6073	ST	1/4"	11450	335
R6081	G	1/4"	10100	235
R6082	S	1/4"	12980	350
R6083	ST	1/4"	18960	560
R6091	G	1/4"	15750	375
R6092	S	1/4"	20170	545
R6093	ST	1/4"	29400	880
R6101	G	1/4"	23640	570
R6102	S	1/4"	30090	825
R6103	ST	1/4"	43340	1330
R6105	T	1/4"	65850	2055

Float Material Key
(G) Glass
(S) Sapphire
(ST) Stainless Steel
(C) Carboloy
(T) Tantalum

Capacity Table: Model 1255

Millimeter				
Tube No.	Float	Float Diameter	Air (CCM)	Water (CCM)
R1011	G	1/8"	50	---
R1012	S	1/8"	80	---
R1013	ST	1/8"	152	---
R1014	C	1/8"	275	---
R1021	G	1/8"	103	---
R1022	S	1/8"	160	---
R1023	ST	1/8"	293	---
R1024	C	1/8"	497	---
R1031	G	1/8"	400	---
R1032	S	1/8"	555	---
R1033	ST	1/8"	870	22.2
R1034	C	1/8"	1300	36.2
R1041	G	1/8"	855	18
R1042	S	1/8"	1135	27.6
R1043	ST	1/8"	1710	47.5
R1044	C	1/8"	2465	73.2
R1051	G	3/16"	2290	50
R1052	S	3/16"	3980	75
R1053	ST	3/16"	4480	125
R1054	C	3/16"	6475	190
R1061	G	3/16"	3425	75
R1062	S	3/16"	4465	115
R1063	ST	3/16"	6600	190
R1064	C	3/16"	9470	285
R1071	G	1/4"	9180	215
R1072	S	1/4"	11990	315
R1073	ST	1/4"	17810	515
R1081	G	1/4"	23740	565
R1082	S	1/4"	30270	830
R1083	ST	1/4"	44050	1335
R6085	T	1/4"	66370	2080

Product Dimensions

Model 1250 Sho-Rate

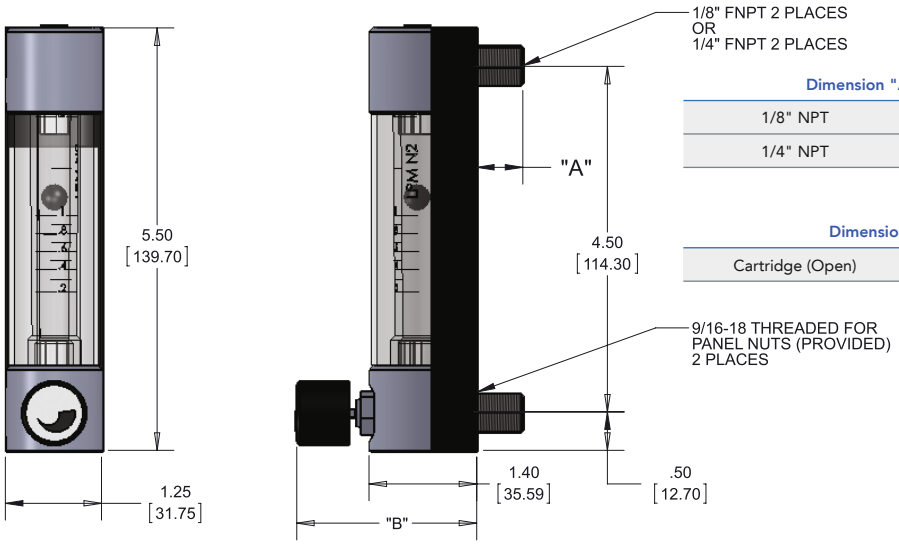

Dimension "A" Connection

1/8" NPT	0.575"
1/4" NPT	0.575"

Dimension "B" Valve

Cartridge (Open)	2.34"

Model 1255 Sho-Rate

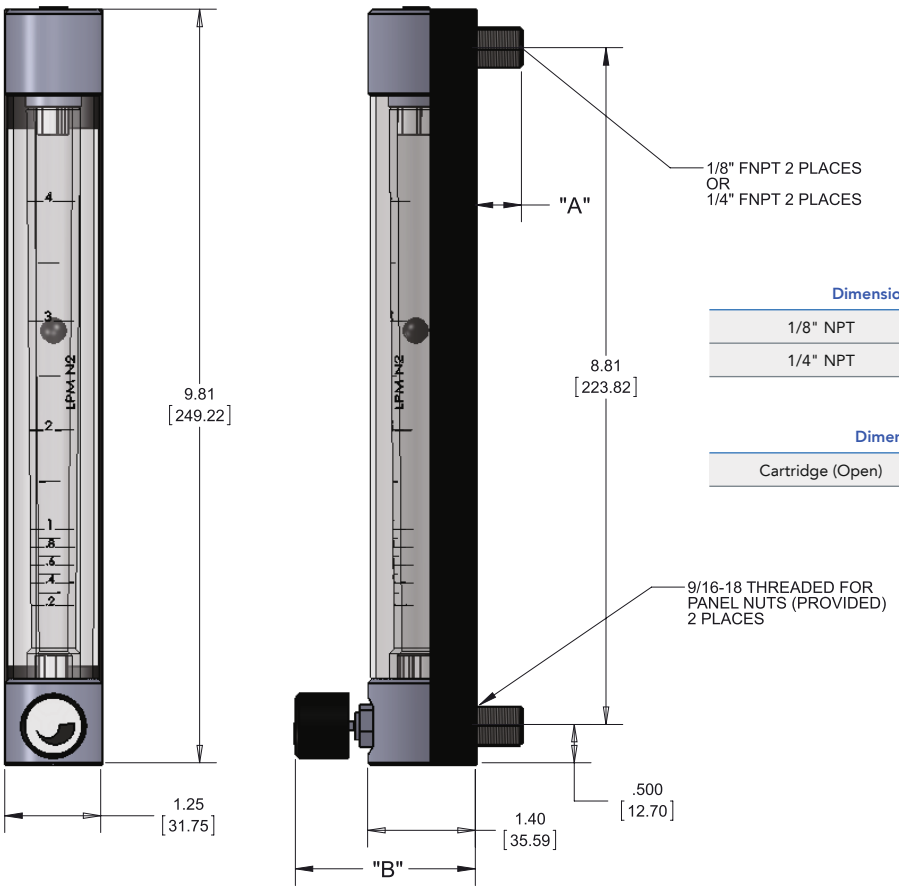

Dimension "A" Connection

1/8" NPT	0.575"
1/4" NPT	0.575"

Dimension "B" Valve

Cartridge (Open)	2.34"

Model Code

Code Description	Code Option	Option Description
I. Base Model Code	1250A	65mm Tube Flowmeter
	1255A	150mm Tube Flowmeter
II. Tube Number	XXXXX	See Capacity Tables for appropriate Tube Number
III. Gas or Liquid	A	Air
	C	Carbon Dioxide
	M	Millimeter with standard data tables
	N	Nitrogen
	O	Oxygen
	R	Argon
	W	Water
	Y	Hydrogen
IV. Unit of Measure	C	CCM
	F	SCFH
	G	GPH
	L	LPM
	M	ml/min
	P	GPM
	R	Millimeter
V. End Blocks Material (Wetted)	A	1/8" FNPT Aluminum
	S	1/8" FNPT Stainless Steel
	Q	1/4" FNPT Stainless Steel
VI. Valve Designation	N	No Valve
	V[2]	Standard Inlet Valve
	O[2]	Outlet Valve (Vacuum or water service only)
VII. O-ring Material Used in Valve	B	Buna - Aluminum only
	V	Viton - Stainless Steel only

[2] Valve material is determined by End Blocks Material selection (Brass valve with Aluminum End Blocks and Stainless Steel valve with Stainless Steel End Blocks).

*For low-flow glass tube meters with additional configuration options including alarms, flow controllers, customized reference conditions, and more please refer to the Shorate 135X product line

Sample Model Code

I	II	III	IV	V	VI	VII
1250A	D6011	A	C	S	V	V

Service and Support

Brooks is committed to assuring all of our customers receive the optimal solution for their application, along with outstanding service and support to back it up. We operate first class repair facilities located around the world to provide rapid response and support. Each location utilizes primary standard calibration equipment to ensure accuracy and reliability for repairs and recalibration and is certified by our local Weights and Measures Authorities and traceable to the relevant International Standards.

Visit www.BrooksInstrument.com to locate the service location nearest to you.

START-UP SERVICE AND IN-SITU CALIBRATION

Brooks Instrument can provide start-up service prior to operation when required. For some process applications, where ISO-9001 Quality Certification is important, it is mandatory to verify and/or (re)calibrate the products periodically. In many cases this service can be provided under in-situ conditions, and the results will be traceable to the relevant international quality standards.

SEMINARS AND TRAINING

Brooks Instrument can provide customer seminars and dedicated training to engineers, end users, and maintenance persons. Please contact your nearest sales representative for more details. Due to Brooks Instrument's commitment to continuous improvement of our products, all specifications are subject to change without notice.

ISO 9001 QUALITY SYSTEM

TRADEMARKS
Brooks ..... Brooks Instrument, LLC
All other trademarks are the property of their respective owners.

Data-Sheet-1250-55-Series-EN/2026-09

Global Headquarters
Brooks Instrument
407 West Vine Street
Hatfield, PA
19440-0903 USA

Toll-Free (USA): 888-554-FLOW
T: 215-362-3500
BrooksAM@BrooksInstrument.com

A list of all Brooks Instrument locations and contact details can be found at www.BrooksInstrument.com

©Copyright 2026 Brooks Instrument, LLC All rights reserved. Printed in U.S.A.

BROOKS® INSTRUMENT
Beyond Measure