BROOKS® INSTRUMENT

Beyond Measure

MT3750C Series

Metal Tube Variable Area Flowmeters for Low Flow Rates in Harsh Environments

When you need durable, reliable, low flow fluid measurement in high-pressure, high-temperature or hazardous settings, MT3750C Series metal tube variable area flowmeters are the solution. Constructed from high-strength steel, MT3750C Series flowmeters feature a compact design with multiple threaded connection options making them easy to install and integrate into existing plants, as well as a cost-effective replacement for glass tube flowmeters. Certified explosion proof, MT3750C Series flowmeters are ideal for a variety of low flow gas and liquid applications. Optional needle valves, transmitters and inductive alarms are available for more advanced flow measurement and control.

Features	Benefits
Wetted Parts Made from Stainless Steel or Monel®	Compatible for a wide range of fluids (liquids or gases)
Ranges Up to 100 l/h or 26 GPH	Capable of measuring (very) low flows accurately
High Pressure and Temperature Ratings	Designed to work safely in harsh environments
Compact Size	Enables easier installation into tight spaces
Local Reading, Integral Control Valve	Optional needle valve, transmitter or alarms provide added levels of measurement and control
Certified Explosion Proof, Intrinsically Safe	ATEX, CSA, and IECEx Approved

Product Specifications

Specifications	
Measuring Range	See Capacities Table 2
Rangeability	10:1 (most sizes)
Metering Tube	316L (stainless steel) Monel K-500
End Fittings	316L (stainless steel) Monel K-500
Accuracy	5%, 3%, VDI/VDE class 4, 2.5
Repeatability	1% Full Scale
Scale	Silver increments with black background - Aluminum Material (52 mm long), single or dual
Connections	1/4" to 3/4"NPT Female 1/4", 6 mm tube compression
Floats	316L stainless steel Titanium Gr. II
O-Rings	Viton® fluoroelastomers PTFE Teflon®, Buna-N, Kalrez® 4079 perfluoroelastomers, Ethylene Propylene
Protection Category	(Indicator only) IP66/67/NEMA 4X, (Alarms) IP65/NEMA 4X, (Transmitter) IP66/67/NEMA 4X
Indicator Housing & Cover	Die cast Aluminum (Alloy 380), epoxy paint, glass window
Maximum Fluid Temperature	204°C/400°F (Refer to tables on Page 3)
Maximum Fluid Pressure	1500 PSIG (100 Bar) 4000 PSIG (276 Bar) (No valve, 1/4" NPT only)
Meter Dimensions	Refer to Figures on Pages 4, 5 and 6
Model Code	Refer to Pages 10, 11 & 12
Pressure Equipment Directive (PED) 2014/68/EU	Flowmeter complies under Sound Engineering Practices (SEP)
RoHS	Products conform to the European Restriction of Hazardous Substances (RoHS) Directive 2011/65/EU
Inductive Alarm Switches	1 or 2 inductive switches
Reed Switches	1 or 2 switches
Transmitter	4-20 mA output
Agency Approvals	Refer to Tables 6-9
Optional Equipment	Cartridge or NRSTM valves Integrally mounted flow controllers

Table 2 MT3750C Capacities

Meter Size	Flow Range					Viscosity Limit[3]	Pressure Drop	
	Water		Air[1,2]					
	gph	l/h	ln/h	scfh	m^3n/h	CP	mBar	Inches WC
A	---	---	2.4 - 15	0.09 - 0.56	---	5	12	4.8
0	0.025 - 0.25	0.096 - 0.96	4.3 - 43	0.16 - 1.6	---	5	12	4.8
1	0.034 - 0.34	0.13 - 1.3	5.6 - 56	0.21 - 2.1	---	10	12	4.8
2	0.096 - 0.96	0.36 - 3.6	13.0 - 120	0.5 - 4.9	---	20	12	4.8
3	0.29 - 2.8	1.0 - 10	---	1.2 - 12	0.033 - 0.33	35	12	4.8
4	0.55 - 5.5	2.1 - 21	---	2.5 - 23	0.063 - 0.62	70	32	12.8
5	1.1 - 11	4.2 - 42	---	5.4 - 53	0.15 - 1.3	100	38	15.3
6	2.8 - 26	11 - 100	---	12 - 110	0.31 - 3.1	130	44	17.7

Notes:
1. Air flows in scfh converted to 70°F and 14.7 psia when the meter is operated at 70°F and 14.7 psia.
2. Air flows in m^3n/h (converted to normal conditions: 0° and 1.013 bar abs) when the meter is operated at 1.013 bar abs and 20°C.
3. When the viscosity of the fluid exceeds the viscosity immunity ceiling (VIC), a calculated correction is applied to account for the difference between factory calibration fluid and process fluid.
4. Capacities shown are based on 316L Stainless Steel float material for meter sizes 1 through 6. Size 0 capacity shown is based on Titanium float material. Titanium float material available for all sizes. Consult factory for flow ranges.

Table 3 MT3750C Pressure Ratings in PSIG (BarG)

Meter Type	Pressure Rating -58°F to 400°F / -50°C to 204°C
Standard Meter	1500 (100)
High Pressure Meter	4000 (276)

Table 4 MT3750C Fluid Temperature at Ambient Temperature

		Max. Fluid Temperature per Option					
Max. Ambient Temperature		Indicator		Alarm		Transmitter	
°F	°C	°F	°C	°F	°C	°F	°C
-58	-50	-58 to 400	-50 to 204	N/A	N/A	N/A	N/A
-20	-29	400	204	-20 to 250	-29 to 120	-20 to 180	-29 to 82
104	40	400	204	250	120	180	82
110	43	390	199	250	120	175	79
120	49	380	193	250	120	170	76
130	54	370	187	250	120	165	74
140	60	360	182	240	115	155	68
150	65	350	176	235	112	150	65
160	71	340	171	N/A			
170	77	330	166				
180	82	320	160				
190	88	310	154				
200	93	300	149				
210	99	290	143				
220	104	280	138				
230	110	270	132				
240	116	260	127				
250	121	250	121				
260	127	240	116				
266	130	230	110				

1. Ambient temperature is limited to 150˚F (65˚C) maximum for painted indicator housing
2. No Paint Housing option must be used when ambient temperature > 150˚F (65˚C)

Table 5 MT3750C Temperature Ratings for Elastomer Materials

	Minimum Temperature		Maximum Temperature	
Elastomer Materials	°F	°C	°F	°C
Kalrez 4079	-58	-50	400	204
Viton A	5	-15	400	204
Teflon PTFE	-58	-50	400	204
Buna	-22	-30	250	120
Ethylene Propylene	-58	-50	250	120

Table 6 Product Approvals - MT3750C (Reference Tables 7, 8 & 9 for Certifications with Transmitter, Reed Switch Alarm and Inductive Alarm)

Declarations	Mark	Meter Options				Standards/Directives/Marking	Declaration/Certificate
		Mechanical	Transmitter	Inductive Switch Alarm	Reed Switch Alarm		
EU Declaration of Conformity	CE		✓	✓		EMC Directive (2014/30/EU)	Declaration
		✓	✓	✓	✓	RoHS Directive (2011/65/EU)	Declaration
		✓	✓	✓	✓	Pressure Equipment Directive (2014/68/EU)	Declaration - SEP
CRN		✓	✓	✓	✓	ASME B31.1 & ASME B31.3	CRN
IP66/67 & NEMA 4X		✓				IEC 60529 & NEMA 250-2014	Declaration
IP66/67			✓			IEC 60529	DEKRA Certificate/UL
IP65				✓		IEC 60529	DEKRA Certificate
Type 4X			✓	✓	✓	CSA	CSA/UL Certificate
Explosion Safety "Constructional Safety (c)"	ATEX Ex	✓				II2G Ex h IIC T6...T3 Gb II2D Ex h IIIC T200°C Db	MBID 022
						Special conditions for safe use: Enclosure contains glass & painted aluminum parts. If it is mounted in an area where the use of category 2G or 2D apparatus is required, it must be installed such that ignition source due to propagating brush discharge sparks are excluded. The actual maximum surface temperature of the equipment depends not on the equipment itself, but on operating conditions of the process fluid/gas flowing through the equipment. The equipment by itself does not generate heat. Due to this reason the temperature class is marked as a range. The maximum permitted ambient and process temperature limits can be found in the operating instructions. At start up especially for gas applications, ensure that the pressure is gradually increased through the piping system. A sudden pressure spike situation may result in a fast movement of the float within the VA flowmeter & the float may hit hard against the float stop. Supply grounding connection by the process connections or earthing terminal.	

MT3750C - Threaded Connections with Indicator Only

MT3750 Standard Connection

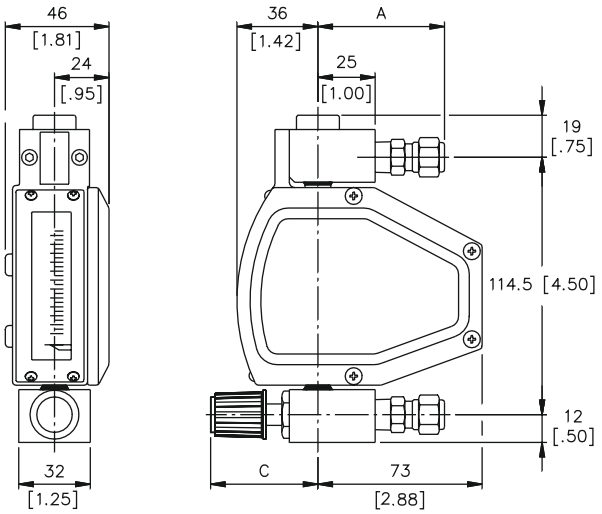

MT3750 with 8800 Series

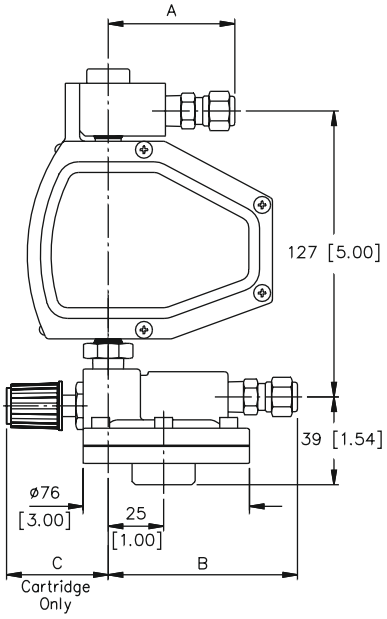

MT3750 with 8900 Series

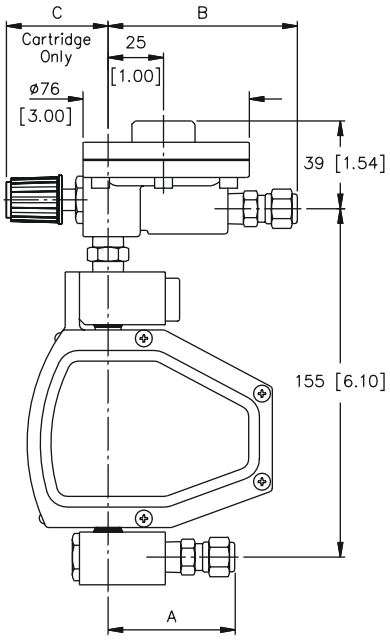

MM
[INCH]

Dimension	1/4" NPT-F	1/4" RC-F	1/4" TB CPR.	6mm TB CPR.	1/2" NPT-F	3/4" NPT-F	Dim. C Valve Open	
Dimension A	25 [1.00]	52 [2.05]	56 [2.20]	56 [2.20]	71 [2.79]	73 [2.87]	Cartridge II	46 [1.81]
Dimension B	53 [2.09]	80 [3.15]	84 [3.30]	84 [3.30]	99 [3.89]	101 [3.97]	N.R.S.	59 [2.32]

*Flow controller bracket not shown. Contact Brooks Instrument for drawing of flow controller with bracket.

MT3750C - Threaded Connections with Transmitter or Inductive Alarm

MT3750 Standard Connection

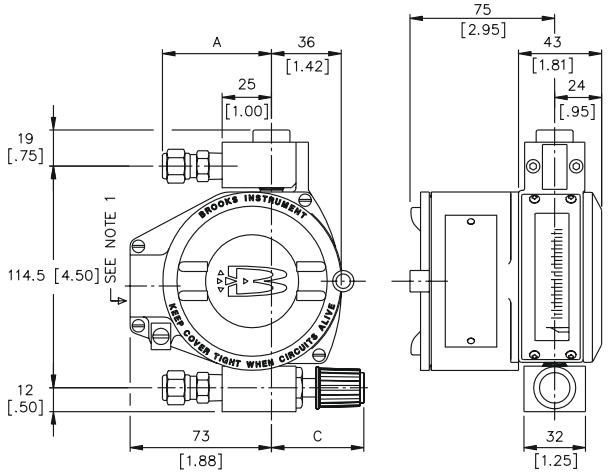

NOTE 1:
CONDUIT CONNECTION M20x1,5 ISO
OR ½"NPT F

MT3750 with 8800 Series

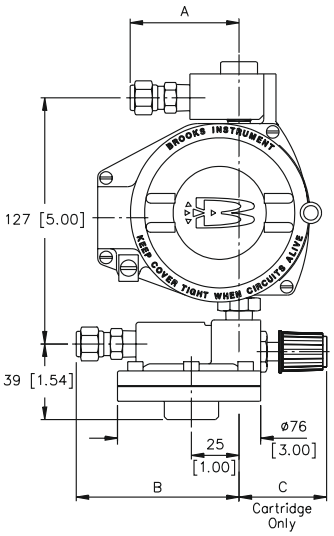

MT3750 with 8900 Series

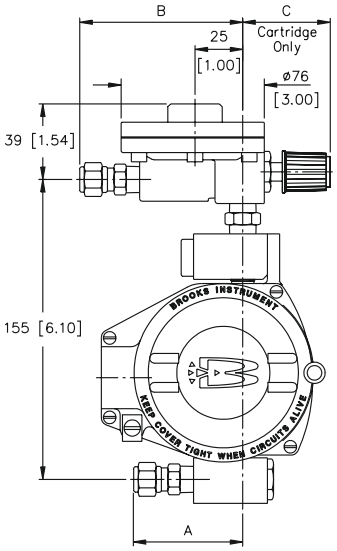

MM
[INCH]

Dimension	1/4" NPT-F	1/4" RC-F	1/4" TB CPR.	6mm TB CPR.	1/2" NPT-F	3/4" NPT-F	Dim. C Valve Open		Dimension D	
Dimension A	25 [1.00]	52 [2.05]	56 [2.20]	56 [2.20]	71 [2.79]	73 [2.87]	Cartridge II	46 [1.81]	8800 Series	125 [4.92]
Dimension B	53 [2.09]	80 [3.15]	84 [3.30]	84 [3.30]	99 [3.89]	101 [3.97]	N.R.S.	59 [2.32]	8900 Series	150 [5.90]

*Flow controller bracket not shown. Contact Brooks Instrument for drawing of flow controller with bracket.

MT3750C - Threaded Connections with Reed Switch Alarm

MT3750 Standard Connection

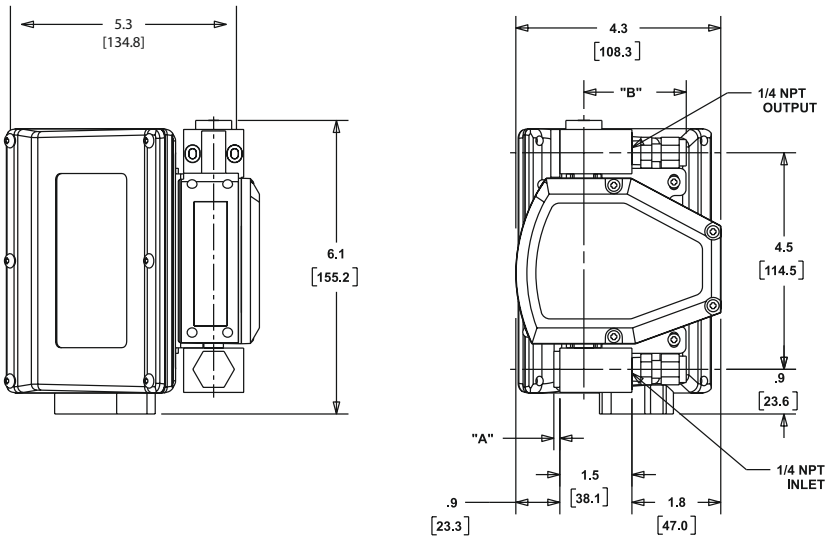

MT3750 with 8800 Series

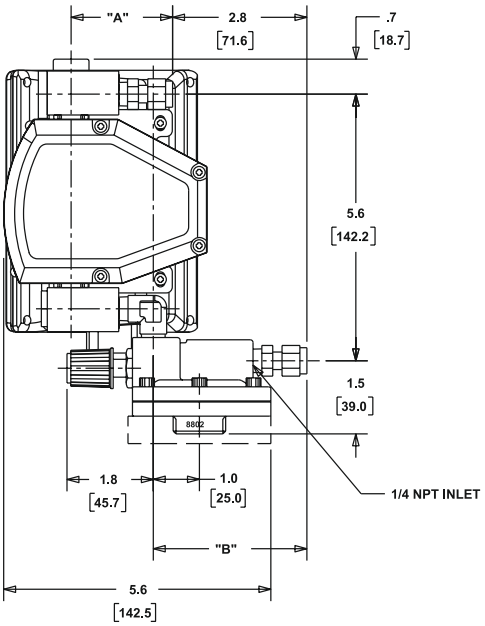

MT3750 with 8900 Series

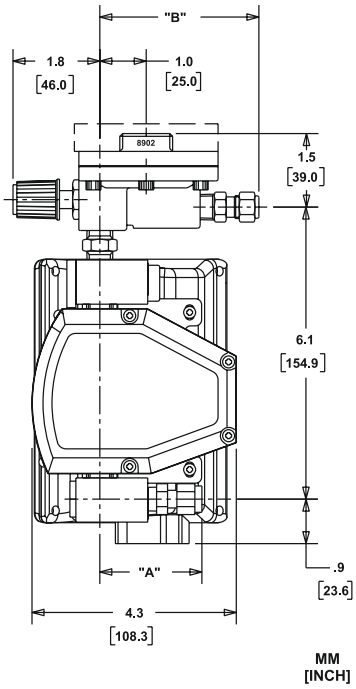

Dimension	1/4" NPT-F	1/4" RC-F	1/4" TB CMPR.	1/2" NPT-F	3/4" NPT-F	6mm TB CMPRS	Dimension C Valve Open			
Dimension A	25 [1.00]	50.8 [2.00]	55.9 [2.20]	71.1 [2.8]	73.7 [2.9]	55.9 [2.2]	Cartridge II	46 [1.81]	PLUG	3.0 [0.1]
Dimension B	53 [2.09]	80 [3.15]	84 [3.30]	84 [3.30]	99 [3.89]	101 [3.97]	N.R.S.	59 [2.32]		

*Flow controller bracket not shown. Contact Brooks Instrument for drawing of flow controller with bracket.

Description - Transmitter

The transmitter provides accurate magnet angle detection and conversion to a 4 - 20 mA industry standard output signal, based on the position of a float assembly in the flowmeter. This rugged, compact, microprocessor-driven device is capable of providing accurate flow information to your external support systems. The patented magnetic sensor with automatic gain control enables an extremely high dynamic capture range without sacrificing accuracy. (Reference Transmitter Wiring Diagram on page 9)

Table 7 Product Approvals - MT3750C with Transmitter

Approvals	Mark	Meter Options				Standards/Directives/Marking	Declaration/Certificate
		Mechanical	Transmitter	Inductive Switch Alarm	Reed Switch Alarm		
Explosion safety "Flame Proof"	ATEX		✓			II 2 G Ex d IIC T6 II 2 D Ex tD A 21 IP66 T 85°C EN 60079-0:2006, EN 60079-1:2004, EN 61241-0:2006, EN 61241:2004 **Special conditions for safe use:** For information regarding the dimension of the flameproof joints the manufacturer shall be contacted.	KEMA 01ATEX2174
	IECEX		✓			EX d IIC T6 IEC 60079-0:2004 IEC 60079-1:2003 **Special conditions for safe use:** For information regarding the dimension of the flameproof joints the manufacturer shall be contacted.	IECEx KEM 06.0049
	UL		✓			Class I, Div.1, Groups A, B, C, and D,T6 Class II, Div.1, Groups E, F, and G Class I, Zone 1 AEx d IIC T6, Ex d IIC T6	UL File E73889
Explosion safety "Intrinsic Safety (ia)"	ATEX		✓			II 2 G Ex ia IIC T6 II 2 D Ex iaD 21 IP66/IP67 T70°C, II 2 D Ex tD A21 IP66/IP67 T70°C EN 60079-0:2006, EN 60079-11:2007 EN 61241-0:2006, EN 61241-11:2006	KEMA 01ATEX1033
	IECEX		✓			Ex ia IIC T6 IEC 60079-0:2004 IEC 60079-11:1999	IECEx KEM 06.0037
			✓			Class I, II, III, Div.1, Groups A, thru G, T6 Class I, Zone 1 AEx ia IIC T6, Ex ia IIC T6	1292059
Explosion safety "Non-sparking (nA)"	IECEX		✓			Ex nA II T6	IECEx KEM 06.0037
			✓			Class I, Div.2, Grps A, B, C, and D; Class II Grps F and G, T6 Class I, Zone 2 AEx nA II T6, Ex nA II T6	1292059
Russia Custom Union Excessive Pressure	EAC		✓			Custom Union including Russia “On safety of the equipment operating under excessive pressure” TR CU 032/2013	TC N RU Д-U.АУ04.В.05988
Russia Custom Union Explosion safety	EAC		✓			Custom Union including Russia "On safety of the equipment for work in explosive environments" TR CU 012/2011 (TR CU Ex)	RU C-HU.ГБ08.В.00741

Description - Reed Switch Alarm
Two reed switches are installed in the alarm housing to provide signaling or switching functions when a preset flow value has been reached. The reed switches provide high, low or dual setpoints and latched output over the full range. The switches are normally adjusted to the desired flow range in the factory. Modifications to the switch settings can be made in the field. Minimum setting distance between two switches is approximately 40% of the scale. (Reference Reed Switch Wiring Diagram on page 9)

Data Reed Switch

Maximum Voltage*	175 Vdc, 124 Vac
Maximum Current*	250 mA
Maximum Contact Rating*	3 Watts

(*Maximum Switch Specifications)

Electrical Classification

Non Incendive:

Maximum Voltage	30 Vdc
Maximum Current	100 mA
Maximum Contact Rating	3 Watts

Table 8 Product Approvals - MT3750C With Reed Switch Alarm

Approvals	Mark	Meter Options				Standards/Directives/Marking	Declaration/Certificate
		Mechanical	Transmitter	Inductive Switch Alarm	Reed Switch Alarm		
Explosion safety "Intrinsic Safety (ia)"	C US				✓	Class I, Div 1, Groups A, B, C and D; Class II, Groups E, F and G; Class III; Encl Type 4X IS Entity Parameters: Vmax=30Vdc, Imax=100mA, Ci=0, Li=0	1788748
Explosion safety "Non-incendive"	C US				✓	Class I, Div 2, Groups A, B, C and D; Class II, Groups E, F and G; Class III; Encl Type 4X	1788748
Explosion safety "Intrinsic Safety (ia)"					✓	Reed Switch Alarms are classified as “Simple Apparatus” when used in Intrinsically Safe circuits. They comply with the requirements of EN60079-11 clause 5.7 – Simple apparatus. Ambient Temperature ratings: -20° C ≤ Tamb ≤ 65° C Input parameters: Vmax = 30V, Imax = 100mA, Ci = 0μF, Li = 0μH Special conditions for safe use: • The product should be installed by suitably trained personnel, in accordance with the applicable code of practice. • As the product has no source of internal heating, the temperature classification is dependent on the ambient air temperature. • Since part of flowmeter enclosure is made of painted aluminum, if it is mounted in group II, category 1 area, it must be installed such, that, ignition sources due to propagating brush discharge spar ks are excluded	

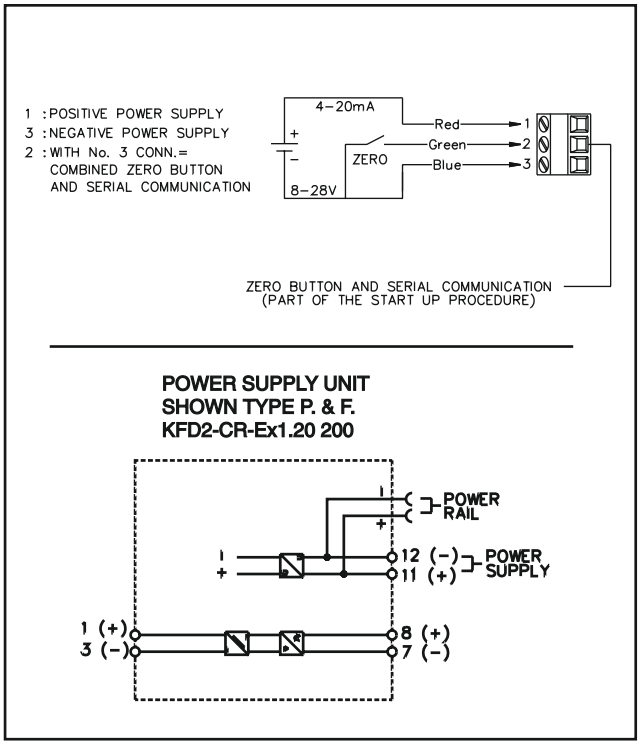

Transmitter Wiring Diagram

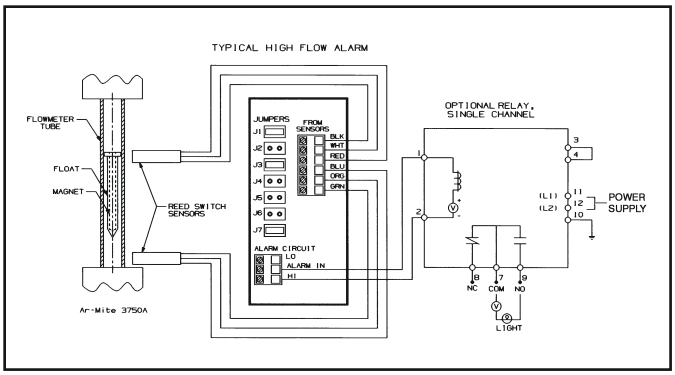

Reed Switch Wiring Diagram

Limit Switches - Inductive Alarm Switch
One or two electronic limit switches type SJ2-N can be installed in the indicator housing to allow initiation of signaling or switching functions on a preset flow value being reached. The SJ2-N limit switch operates as a slot initiator that is inductively actuated by a cam mounted to the pointer. Any flow value can be used for setting the limit value by sliding the switch along the slot in the mounting plate for the initiators. Minimum setting distance between two limit switches is approximately 50% of the scale range.

Power supply	**8 Vdc (Max. 15.5 Vdc)**
Current consumption	active area clear: > 3 mA
Current consumption	active area obscured: < 1 mA
Self inductance	29 µH
Self capacitance	20 nF
Max Temp	158°F (70°C)

The flow valve can be used for setting the limit value by sliding the switch along the slot in the mounting plate for the initiators. Minimum setting distance between two limit switches is approximately 50% of the scale range.

Table 9 Product Approvals - MT3750C With Inductive Alarm

Approvals	Mark	Meter Options				Standards/Directives/Marking	Declaration/Certificate
		Mechanical	Transmitter	Inductive Switch Alarm	Reed Switch Alarm		
Explosion safety "Intrinsic Safety (ia)"	ATEX			✓		II 2 G Ex ia IIC T6 II 2 D Ex ia D 21 IP65 T75°C EN 60079-0:2006, EN 60079-11:2007 EN 61241-0:2006, EN 61241-11:2006	KEMA 02ATEX1126
	IECEX			✓		Ex ia IIC T6 Gb Ex ia IIIC T 75°C Db IP65 IEC 60079-0:2007-10 , IEC 60079-11:2006 , IEC 61241-11:2005	IECEx KEM 09.0046
	C US			✓		Class I, II, III, Div.1, Groups A thru G, T6 Class I, Zone 0, Zone 1 AEx ia IIC, T6 Ex ia IIC T6	1379260
Explosion safety "Non-sparking (nA)"	C US			✓		Class I, II, III, Div. 2, Groups A thru G, T6 Class I, Zone 2 AEx nA II, T6 Ex nA II T6	1379260
Russia Custom Union Excessive Pressure	EAC			✓		Custom Union including Russia “On safety of the equipment operating under excessive pressure” TR CU 032/2013	TC N RU Д-U.АУ04.В.05988
Russia Custom Union Explosion safety	EAC			✓		Custom Union including Russia "On safety of the equipment for work in explosive environments" TR CU 012/2011 (TR CU Ex)	RU C-HU.ГБ08.В.00741

Code Description	Code Option	Option Description
I-V. Base Model Number	3750C	55mm, Armored Purge Flowmeter

VI. Material Specification	1	316L Stn. Stl. & CRN Certification
	2	316L Stn. Stl., CRN Certification & Certified Material to EN 2.1
	3	316 Stn. Stl., CRN Certification & Certified Material to EN 3.1
	4	316L Stn. Stl., CRN Certification & Section IX Welding
	5	316L Stn. Stl., CRN Certification & Certified Material to EN 2.1/Section IX Welding
	6	316L Stn. Stl., CRN Certification & Certified Material to EN 3.1/Section IX Welding
	7	316L SS, CRN + P.Q.R. acording ASME IX - CODE 5
	8	316L SS, CRN + Material Certification Acc to EN 3.1 - CODE 5
	9	316L SS, CRN + Certified Acc. EN 3.1 / P.Q.R. according ASME IX - CODE 5
	A	316L Stn. Stl.
	B	316L Stn. Stl., Certified Material to EN 2.1
	C	316L Stn. Stl., Certified material to EN 3.1
	D	316L Stn. Stl. with Section IX Welding
	E	316L Stn. Stl., Certified Material to EN 2.1/Section IX Welding
	F	316L Stn. Stl., Certified Material to EN 3.1/Section IX Welding
	G	Monel K500
	H	Monel K500 Certified Material to EN 3.1
	J	316L SS, Material Certification Acc to EN 3.1 - CODE 5
	K	316L SS, P.Q.R. acording ASME IX - CODE 5
	L	316L SS, Certified Acc. EN 3.1 / P.Q.R. according ASME IX - CODE 5

VII. Meter Size		316L Tube	Monel K 500 Tube
	0	Size 0 - Titanium Float	Size 0 - Titanium Float
	1	Size 1 - 316L Stn. Stl. Float	Size 1 - Monel K 500 Float
	2	Size 2 - 316L Stn. Stl. Float	Size 2 - Monel K 500 Float
	3	Size 3 - 316L Stn. Stl. Float	Size 3 - Monel K 500 Float
	4	Size 4 - 316L Stn. Stl. Float	Size 4 - Monel K 500 Float
	5	Size 5 - 316L Stn. Stl. Float	Size 5 - Monel K 500 Float
	6	Size 6 - 316L Stn. Stl. Float	Size 6 - Monel K 500 Float
	A	Size A - Titanium Float	
	B	Size 2 - Titanium Float	
	C	Size 3 - Titanium Float	
	D	Size 4 - Titanium Float	
	E	Size 5 - Titanium Float	
	F	Size 6 - Titanium Float	

VIII. Construction/Seals		Construction	Seals
	A	Standard Design	Viton O-rings
	B	Standard Design	Teflon O-rings (No Valve Only)
	C	Standard Design	Buna O-rings
	D	Standard Design	Kalrez O-rings (With/Without Valve)
	E	Standard Design	EPM O-rings
	F	Standard Design	Teflon in Meter and Kalrez in Valve
	G	All Welded/High Pressure	No Elastomer - No Valve Cavity

Code Description	Code Option	Option Description
IX. Connection Size and Type	1	1/4" NPT (F) - Integral
	2	1/4" Tube Compression - With Adapter
	3	6 mm Tube Compression - With Adapter
	4	1/4" Rc (F) - With Adapter
	5	1/2" NPT (F) With Adapter
	6	3/4" NPT (F) - With Adapter

X. Connection Orientation	1	Horizontal Inlet and Outlet (Threaded Connections Only)

XI. Valve Configuration	A	No Valve (Standard Fitting with Plug)
	B	Low Flow Valve on Inlet - Typical for Sizes 0, 1, 2
	C	Medium Flow Valve on Inlet - Typical for Sizes 3 & 4
	D	High Flow Valve on Inlet - Typical for Sizes 5 & 6
	E	No Valve Cavity - All Welded / High Pressure Only
	K	NRS Valve - Size 3 on Inlet - Typical for Sizes 0 & 1
	L	NRS Valve - Size 4 on Inlet - Typical for Size 2
	M	NRS Valve - Size 5 on Inlet - Typical for Size 3
	N	NRS Valve - Size 6 on Inlet - Typical for Sizes 4 & 5
	P	NRS Valve - Size 7 on Inlet - Typical for Size 6
	U	Mounted to 316L SS 8805 Flow Controller with Teflon Diaphragm
	W	Mounted to 316L SS 8905 Flow Controller with Teflon Diaphragm
	1	Mounted to 316L SS 8802 Flow Controller with Teflon Diaphragm
	3	Mounted to 316L SS 8902 Flow Controller with Teflon Diaphragm

XII. Accuracy/Inscription/ Fluid		Accuracy	Inscription	Fluid
	9	N/A	No Scale	N/A
	A	N/A	Blank Scale	N/A
	B	4 VDI / 5% FS	% Scale	Liquid
	C	4 VDI / 5% FS	Direct Reading	Liquid
	D	4 VDI / 5% FS	% Scale	Gas
	E	4 VDI / 5% FS	Direct Reading	Gas
	F	4 VDI / 5% FS	% Scale	Liquid - High Viscosity
	G	4 VDI / 5% FS	Direct Reading	Liquid - High Viscosity
	H	2.5 VDI / 3% FS	% Scale	Liquid
	J	2.5 VDI / 3% FS	Direct Reading	Liquid
	K	2.5 VDI / 3% FS	% Scale	Gas
	L	2.5 VDI / 3% FS	Direct Reading	Gas
	M	2.5 VDI / 3% FS	% Scale	Liquid - High Viscosity
	N	2.5 VDI / 3% FS	Direct Reading	Liquid - High Viscosity

Code Description	Code Option	Option Description
XIII. Electrical Output	A	None
	B	Reed Switch Alarm, Meter Mounted
	E	Single Inductive Alarm with M20 x 1.5 Electrical Connection
	F	Single Inductive Alarm with 1/2" NPT (F) Electrical Connection
	G	Double Inductive Alarm with M20 x 1.5 Electrical Connection
	H	Double Inductive Alarm with 1/2" NPT (F) Electrical Connection
	J	Mat Transmitter with M20 x 1.5 Electrical Connection
	K	Mat Transmitter with 1/2" NPT (F) Electrical Connection
	L	None (Indicator only), No Paint Housing
XIV. Alarm Relay/Transmitter Power Supply	A	None
	B	Power Supply 24 Vdc with IS Barrier
	E	24 Vdc 1 Channel
	F	24 Vdc 2 Channel
	G	120 Vac 1 Channel
	H	120 Vac 2 Channel
	J	240 Vac 1 Channel
	K	240 Vac 2 Channel
XV. Certifications/Approvals	A	None
	C	Zone 1, Intrinsically Safe CENELEC - ATEX
	D	Zone 1, Flame-proof CENELEC - ATEX
	E	Division 2/Zone 2, Non-incendive CSA - USA and Canada (Transmitter 1/2" NPT & Alarms)
	F	Division 1/Zone 1, Intrinsically Safe CSA - USA and Canada (Transmitter 1/2" NPT & Alarms)
	G	Division 1/Zone 1, Explosion-proof/Flame-proof UL Listed - USA and Canada
	L	Zone 1 Intrinsically Safe IECEx (World) (1/2" NPT and M20 Elec. Conn.)
	M	Zone 2 Non-sparking IECEx (World) - Transmitter Only (1/2" NPT and M20 Elec. Conn.)
	N	Zone 1 Flame-proof IECEx (World) - Transmitter Only (M20 Elec. Conn.)
	P	TR CU Ex Zone 2, Non-incendive/non-sparking (Customs Union including Russia) - Transmitter 1/2" NPT & Alarm
	R	TR CU Ex Zone 1, Flame-proof XP - IIC (Customs Union including Russia)
	S	TR CU Indicator only (Customs Union including Russia)
	T	Zone 1 Flame-proof - KOSHA (Korea)
	U	Zone 1/Zone 2 Non-Electrical ATEX
XVI. Material Inspection	A	None
	1	NACE MR0175 MR0103 - 2.1 Certificate only (316L SS Construction Only)
	2	Liquid Dye Penetrant Test Report - 3.1 (Welds Only) - (316L SS Construction Only)
	3	Certified According to NACE MR0175 MR0103& Liquid Penetrant
	4	International Calibration Certificate Includes Scale Check

Code Description	Code Option	Option Description
XVI. Material Inspection (continued)	5	ICC & NACE MR0175 MR0103
	6	Positive Material Identification Report - 3.1
	7	PMI & LDP
	8	ICC & PMI
	9	ICC, PMI & LDP
	B	LDP, ICC
	C	LDP, NACE MR0175 MR0103
	D	LDP, NACE MR0175 MR0103, PMI
	E	LDP, NACE MR0175 MR0103, PMI, ICC
	F	ICC, PMI, NACE
	H	LDP, ICC, NACE
XVII. Accessory	A	None
	B	Flush Panel Mounting (Indicator and Threaded Connections Only)
	C	No Brooks Identification (Indicator Only)
	D	Clean for Oxygen Service 2.1 (CGA G-4.1-2018)
	E	Commercial Clean
	S	Flush Panel Mounting (Same as Option B) & Clean for Oxygen Service
	T	Flush Panel Mounting (Same as Option B) & Commercial Clean
XVIII. Accessory Group 2	0	None
	B	Bracket, FCA, Standard
	C	Bracket, FCA, Stainless Steel
	D	Dual Scale
	E	Dual Scale and Standard Bracket
	F	Dual Scale and SS Bracket

Sample Model Code

I-V	VI	VII	VIII	IX	X	XI	XII	XIII	XIV	XV	XVI	XVII	XVIII
3750C	A	2	A	1	1	A	B	A	A	A	A	A	0

Brooks is committed to assuring all of our customers receive the ideal flow solution for their application, along with outstanding service and support to back it up. We operate first class repair facilities located around the world to provide rapid response and support. Each location utilizes primary standard calibration equipment to ensure accuracy and reliability for repairs and recalibration and is certified by our local Weights and Measures Authorities and traceable to the relevant International Standards.

Visit www.BrooksInstrument.com to locate the service location nearest to you.

START-UP SERVICE AND IN-SITU CALIBRATION

Brooks Instrument can provide start-up service prior to operation when required. For some process applications, where ISO-9001 Quality Certification is important, it is mandatory to verify and/or (re)calibrate the products periodically. In many cases this service can be provided under in-situ conditions, and the results will be traceable to the relevant international quality standards.

SEMINARS AND TRAINING

Brooks Instrument can provide seminars and dedicated training to engineers, end users, and maintenance persons.

Please contact your nearest sales representative for more details.

Due to Brooks Instrument's commitment to continuous improvement of our products, all specifications are subject to change without notice.

TRADEMARKS

Brooks, NRS, Sho-Rate..... Brooks Instrument, LLC
All other trademarks are the property of their respective owners.

ISO 9001 QUALITY SYSTEM

Data-Sheet-3750C-EN/2026-09

Global Headquarters
Brooks Instrument
407 West Vine Street
Hatfield, PA
19440-0903 USA

Toll-Free (USA): 888-554-FLOW
T: 215-362-3500
BrooksAM@BrooksInstrument.com

A list of all Brooks Instrument locations and contact details can be found at www.BrooksInstrument.com

©Copyright 2026 Brooks Instrument, LLC All rights reserved. Printed in U.S.A.

BROOKS® INSTRUMENT
Beyond Measure