Blue-White®

M3

FLEXFLO® Peristaltic Metering Pump

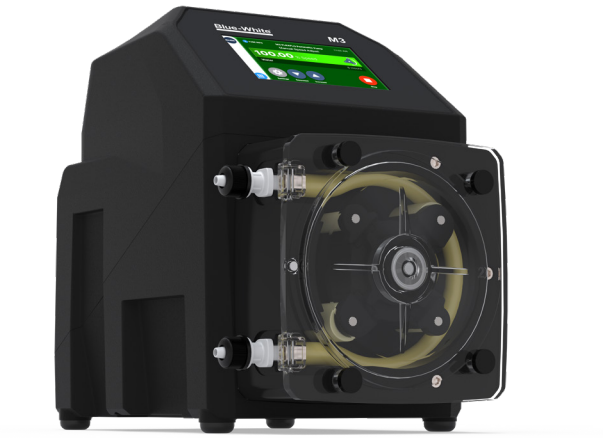

Features

> User-friendly 5” touchscreen color LCD display
> Self priming peristaltic metering pump delivers smooth chemical feed
> Tube Failure Detection (TFD) system senses tube failure
> Inputs include: 4-20mA, Pulse/Frequency Inputs, Remote Start/Stop
> Signal outputs include: 4-20mA Output, Frequency Output, one 250V/6 AMP relay output, three 115V/1A output alarm
> Industrial Protocols: EtherNet/IP, Modbus TCP/IP, Profibus DP
> Revolution count display & user programmable alarm

Video link:

NSF Certified to NSF / ANSI Standard 61 · ETL c us · CE · NEMA 4X

Highlights

Flow range
.0002 - 33.3 GPH
.0007 - 126 LPH

Pressures
125 PSI
(8.6 bar)

Turndown ratio
10,000 : 1

Exclusive
Tube Failure Detection (TFD)

Motor
Brushless DC

Warranty
5 Years

Control Methods

Control Methods	Manual Control	4-20mA Input	Remote Start/Stop	Pulse Input	Frequency Input	Ethernet/ IP	Modbus TCP/IP	Profibus DP	4-20mA Output	(4) Alarm Outputs	FVS
M3	•	•	•	•	•	•	•	•	•	•	•

For more help and information regarding **M3**, please visit www.blue-white.com or scan this QR code.

Engineering Specifications

Maximum Working Pressure (excluding pump tubes)	125 psig (8.6 bar)
	NOTE: See individual pump tube assembly maximum pressure ratings.
Maximum Fluid Temperature (excluding pump tubes)	185 °F (85 °C)
	NOTE: See individual pump tube assembly max. temperature ratings.
Maximum Viscosity	12,000 Centipoise
Maximum Suction Lift	30 ft. Water, 0 psig (9.14 m, 0 bar)
Ambient Operating Temperature	14 °F to 115 °F (-10 °C to 46 °C)
Ambient Storage Temperature	-40 °F to 158 °F (-40 °C to 70 °C)
Operating Voltage	115VAC/60Hz, 1ph (2.0 Amp Maximum)
	230VAC/60Hz, 1ph (1.0 Amp Maximum)
	220VAC/50Hz, 1ph (1.0 Amp Maximum)
	240VAC/50Hz, 1ph (1.0 Amp Maximum)
	230VAC/50Hz, 1ph (1.0 Amp Maximum)
Power Cord Options	115V60Hz = NEMA 5/15 (USA)
	230V60Hz = NEMA 6/15 (USA)
	220V50Hz = CEE 7/VII (EU)
	240V50Hz = AS 3112 (Australia/New Zealand)
	230V50Hz = BS 1363/A (UK)
Motor	Brushless DC, 1/4 hp
Motor Speed Adjustment Range	10,000:1 (0.01% - 100% motor speed) Max RPM = 125
Motor Speed Adjustment Resolution	0.1% increments > 1% motor speed and < 100%
	0.01% increments < 1% motor speed
Display	5” touchscreen color LCD, UV resistant.
Display Languages	English, Spanish, French, German, and Portuguese selectable
Maximum Overall Dimensions	8-1/4”W x 11-3/4”H x 13-1/4”D (20.9W x 29.8H x 34.5D cm)
Product Weight	25.4lb. (11.5 Kg)
Security	Programmable 6-digit password
Approximate Shipping Weight	30 lb. (13.6 Kg)
Enclosure	NEMA 4X (IP66), Polyester powder coated aluminum & Noryl
RoHS Compliant	Yes
Standards	cETLus, CE, NSF61

Dimensions

Dim	Inch	cm
A	11-3/4”	29.8
B	8-1/4”	20.9
C	13-1/2”	34.5

Dim	Inch	cm
D	10-1/2”	26.5
E	4-1/4”	10.8

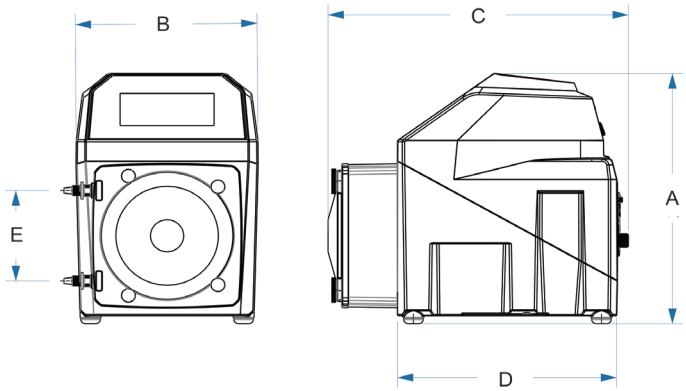

Materials of Construction

Non-wetted Components:

Enclosure: 413 Aluminum (Polyester powder coated) & Noryl

Pump Head: Valox® (PBT) thermoplastic

Pump Head Cover: Polycarbonate

Permanently lubricated sealed motor shaft support ball bearing.

Cover Screws: Stainless steel, polypropylene cap

Roller Assembly:

Rotor: Valox® (PBT)

Rollers: Nylon

Roller Bearings: SS Ball bearings

Motor Shaft: Chrome plated steel

TFD System Sensor: Hastelloy C-276

Power Cord: 3 conductor, SJTW-A water-resistant

Mounting Brackets and Hardware: 316 Stainless steel

Wetted Components:

Pump Tube Assembly:

Tubing: Flex-A-Prene®, Flex-A-Chem® or Flex-A-Thane®

Adapter Fittings: PVDF

One spare tube included

Ancillary Items Not Included (sold separately):
Injection Fitting, Foot Valve/Strainer, Suction Tubing/Pipe, Discharge Tubing/Pipe, Quick Disconnect Valves, or Communications Wire/Cable.

Output Specifications

Tube Material / Size	Feed Rate			Max Speed	Max Pressure	Max Temperature	Roller Required
	GPH	LPH	ML/Min	RPM	PSI (bar)	°F (°C)	
Flex-A-Prene® M3 Tube							
ND	.0002 - 2.10	.0007 - 7.92	.0132 - 132	125	125 (8.6)	185 (85)	A3-SND-R
NEE	.0004 - 4.76	.0018 - 18.0	.03 - 300	125	110 (7.6)	185 (85)	A3-SNGG-R
NGG	.0019 - 19.02	.0072 - 72.0	.12 - 1200	125	110 (7.6)	185 (85)	A3-SNGG-R
NHL	.0017 - 17.39	.0066 - 65.8	.11 - 1097	125	65 (4.5)	185 (85)	A3-SNGG-R
NK	.0033 - 33.3	.0126 - 126	.21 - 2100	125	125 (8.6)	185 (85)	A3-SNGG-R
NKL	.0033 - 33.3	.0126 - 126	.21 - 2100	125	30 (2.1)	185 (85)	A3-STH-R
Flex-A-Chem® M3 Tube							
TH	.0015 - 15.06	.0057 - 57.0	.0950 - 950	125	50 (3.4)	130 (54)	A3-STH-R
TK	.0028 - 28.5	.0108 - 108	.18 - 1800	125	50 (3.4)	130 (54)	A3-SNGG-R
Flex-A-Thane® M3 Tube							
GE	.0004 - 4.60	.0017 - 17.4	.0290 - 290	125	65 (4.5)	130 (54)	A3-SGE-R
GG	.0010 - 10.1	.0038 - 38.4	.0637 - 637	125	65 (4.5)	130 (54)	A3-SGE-R
G2G	.0018 - 18.23	.0069 - 69.0	.0115 - 1150	125	65 (4.5)	130 (54)	A3-SGE-R
GH	.0024 - 24.9	.0094 - 94.2	.1570 - 1570	125	65 (4.5)	130 (54)	A3-SGE-R
GK	.0028 - 28.5	.0108 - 108	.1800 - 1800	125	65 (4.5)	130 (54)	A3-SGE-R

Model Number Matrix

FLEXFLO® Model Number

M3	FLEXFLO® Peristaltic metering pump

Power Cord (operating voltage user selectable 115V/240 Vac 50/60Hz)

4	115V / 60Hz, power cord NEMA 5/15 plug (US)
6	220V / 50HZ, power cord CEE 7/VII plug (EU)
X	No Power Cord

Inlet/Outlet Connection Size, Connection Type, Connection Material

S	3/8” OD x 1/4” ID Tube Compression Fitting, Natural PVDF (Kynar)
M	1/2” Male NPT Fitting, Natural PVDF (Kynar)
B	1/2” Hose Barb, Natural PVDF (Kynar), available for ND, NEE, NGG, NKL, and G2G only
C	1/2” - 3/4” Tri-clamp connections, Natural PVDF (Kynar), available for ND, NEE, NGG, NKL, and G2G only
Q	Quick Disconnect, Natural PVDF (Kynar), available for ND, NEE, NGG, NKL, and G2G only. (valves sold seperately)
MB	1/2” Male BSPT Fitting, Natural PVDF (Kynar)

Pump Tube Material, Pump Tube Size, Output Range

NOTE: * = Dual tube

ND	Flex-A-Prene® .075 ID | .0002–2.10 GPH | 125 PSI	GE	Flex-A-Thane® .125 ID | .0004–4.60 GPH | 65 PSI
NEE*	Flex-A-Prene® .093 ID | .0004–4.76 GPH | 110 PSI	GG	Flex-A-Thane® .187 ID | .0010–10.1 GPH | 65 PSI
NGG*	Flex-A-Prene® .187 ID | .0019–19.02 GPH | 110 PSI	G2G*	Flex-A-Thane® .187 ID | .0018–18.23 GPH | 65 PSI
NHL	Flex-A-Prene® .250 ID | .0017–17.4 GPH | 65 PSI	GH	Flex-A-Thane® .312 ID | .0024–24.9 GPH | 65 PSI
NK	Flex-A-Prene® .375 ID | .0033–33.3 GPH | 125 PSI	GK	Flex-A-Thane® .375 ID | .0028–28.5 GPH | 65 PSI
NKL	Flex-A-Prene® .375 ID | .0033–33.3 GPH | 30 PSI	TH	Flex-A-Chem® .250 ID | .0015–15.06 GPH | 50 PSI
		TK	Flex-A-Chem® .375 ID | .0028–28.5 GPH | 50 PSI

Pumphead Orientation

(Blank)	Standard - Left facing
R	Right facing pumphead
D	Down facing pumphead

M3	S	2	4	-	S	ND	R	**Sample Model Number**

Accessories

1/4” x 3/8” “S” Fitting
1/2” Hose Barb “B” Fitting
1/2” MNPT “M” Fitting

Quick Disconnects

*KIT-QSV FKM O-rings	*KIT-QBV FKM	*KIT-QMV FKM
*KIT-QSE EP O-rings	*KIT-QBE EP	*KIT-QME EP
*KIT-QSA Aflas O-rings	*KIT-QBA Aflas	*KIT-QMA Aflas

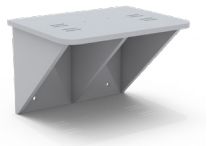

KIT-PSM
Wall Mount Bracket, HDPE

KIT-M12
Two M12 Cables - 9.8 ft.

90010-663 115V/60Hz NEMA 5/15
90010-664 220V/50Hz CEE 7/V11
90010-665 230V/50Hz BS 1363/A
90010-666 240V/50Hz AS 3112
90010-696 230V/60Hz NEMA 6/15
90010-711 115V Lockable

POWER CABLES - 6 ft

A-014NK-6A
Injector, PVDF, 1/4” “S” Conn.

KIT-DP3
Profibus Cable, 3 ft

Visit Accessory Pages for More Options

P.N. 85000-157 M3 REV 10 20260519

M3 is sold and serviced exclusively by highly skilled, factory authorized technicians.

5300 Business Drive, Huntington Beach, CA 92649
TEL 714-893-8529 | FAX 714-894-9492 | www.blue-white.com | sales@blue-white.com

ISO 9001:2015 CERTIFIED
SINCE Quality 1957
MADE IN THE USA