SureFire II Lubricator

Automatic, Oil & Fluid Grease, Single Phase

General

The SureFire II Lubricator is an automatic, robust and durable pump. Its compact size is designed to fit your space requirements and lubrication demands. The SureFire II Lubricator is a self-contained electric motor-driven gear pump that can adapt to a broad range of production machinery.
The PDI version can handle oil or fluid grease for single injectors or injector groups serving up to 100 lubrication points. The SLR version uses oil to supply resistance fittings or resistance fittings groups serving up to 100 lubrication points. The SureFire pump's versatility also allows it to perform with other lubrication system types and multiple applications.

3 Liter Single Phase Standard

PDI Operation

The SureFire II PDI Lubricator has a motor-driven pump that pulls lubricant in from the reservoir and delivers pressurized lubricant to the distribution network through the outlet(s) in the top plate. Pressurizing the distribution network forces all of the positive displacement injectors (PDIs) in the system to fire, discharging the lubricant that was stored in each of their discharge chambers during the last pump cycle.

Once all of the PDIs discharge, the pressure in the network continues to rise until the limit in the pressure switch is reached. Once this limit is reached, the pressure switch can be used to stop the motor, and momentary pressure in the distribution network becomes greater than the pressure at the outlet side of the gear pump. This pressure differential actuates a quick dump valve which relieves the distribution line pressure back into the reservoir.

SLR Operation

The SureFire SLR Lubricator has a motor-driven pump that pulls oil in from the reservoir and delivers pressurized oil to the distribution network through the outlet(s) in the top plate. Pressurizing the distribution network forces all of the resistance fittings in the system to discharge the oil in proportioned quantities to the friction points. The resistance fittings continue to flow and the pump builds pressure until pressure relief valve setting is reached (75 psi/5 bar). Once the motor is shut off, pressure in the distribution network returns to near 0 psi. This actuates a quick dump valve which relieves the line pressure back into the reservoir.

Features

- PDI version handles oil and fluid greases
- SLR version handles oil
- Low level switch for fail safe operation
- Oil outlet connections on either side for easy installations
- Plastic and metal reservoirs available
- Convenient terminal block provides fault-free electrical connections
- Large capacity fill cap with built-in strainer minimizes contamination
- All versions are CE approved
- Two controller versions available, Premium and Lite functionality
- On/Off Timer version available
- Terminal block version available without integral control, for operation via customer PLC, DCS, etc.

BIJUR DELIMON INTERNATIONAL

(919) 465 4448 LOCAL
(800) 631 0168 TOLL-FREE
(919) 465 0516 FAX

WWW.BIJURDELIMON.COM

Premium Controller/Monitor

The SureFire II with the premium controller/monitor is designed to precisely control the lubrication to a piece of equipment. It does this by controlling the pump's cycle time, monitoring both internal and external inputs or switches, detecting and reporting faults, and offering visual feedback that can be continuously updated and improved to enhance the user's experience with the product.

The functions of this microprocessor-based controller are as follows:

+ Manage the on times and the off times of the pump
+ Provide prelube functionality on start up
+ Detect and respond to various input signals
+ Display in real time the status of the pump at any time
+ Monitor for faults in the system
+ Provide output signals for feedback to the controlling machine

ATTENTION

Additional information about the premium controller is available in Operators Manual #36414: SureFire II Controller Supplement.

The premium controller also features the protection of settings, through password based security, protection of motors with limited duty cycles and restoration of default settings if required.

2 Liter Single Phase w/ Controller

Lite Controller/Monitor

The SureFire II Lite Controller is a multi-purpose programmable controller. Controller settings are saved whenever power is interrupted. Up to four operating modes can be selected which allows the controller to be used with various lubrication system designs.

+ Digital status display on the front of the pump for easy programming
+ System monitoring capabilities
+ Data memory function initiated at power down
+ Compact design

ON/OFF Timer

The SureFire II Lubricator is also available with an ON/OFF timer option to provide basic timing functions, as detailed below:

+ Digital status display on the front of the pump for easy programming
+ ON time range = 1 second to 99 hours
+ OFF time range = 1 second to 99 hours
+ ON and OFF time settings are adjusted using the programmable controller
+ Upon power up, timer begins with ON time settings
+ Customer simply connects (+) and (-) power to the lubricator controller terminals

Provide output signals for feedback of a fault to the controlling machine

Without Integral Control

The SureFire II Lubricator is available without integral control option for operation via customer PLC, DCS, etc. , two options detailed below:

+ Terminal block
+ Terminal block with momentary run switch and motor 'on' LED

BIJUR DELIMON INTERNATIONAL

(919) 465 4448 LOCAL
(800) 631 0168 TOLL-FREE
(919) 465 0516 FAX

WWW.BIJURDELIMON.COM

Technical Data

Output Volume – 115 VAC, 230 VAC (max.) Single Phase	250cc/min @ 60 Hz 210cc/min @ 50 Hz			
Output Volume – 24 VDC (max.)	250cc/min			
Output Pressure (max.)	**PDI**			450 psi (31 bar)
	SLR			75 psi (5 bar)
Pressure Switch Setting[1]	**PDI**			Closes at 290 psi (20 bar)
	SLR			Closes at 20 psi (1.4 bar)
Lubricant Viscosity	**Standard Oil version:**	20 to 1500 cSt @ operating temperature		
	Light Oil version:	5-40 cSt @ operating temperature		
Soft Greases[2]	NLGI grade 000 - NLGI grade 00 (40,000 cSt max)			
Reservoir Fill Screen (oil only)	40 mesh, removable			
Reservoir Volume	2 liter 3 liter 6.0 liter 12.0 liter			
Reservoir Material	Luran (Blue Tint) for 2, 3 and 6 liter Steel for 2, 3, 6 and 12.0 liter			
Motor Voltage Options	100/115 VAC 50/60 Hz Single Phase 200/230 VAC 50/60 Hz Single Phase 24 VDC			
Motor Power Requirements[3]		100-115VAC	200-230VAC	24VDC
	Peak Starting Current(amps)	1.2	0.85	4.0
	Normal Running Current(amps)	1.0	0.7	3.4
	Max Current Locked Rotor(amps)	1.5	1.4	14.2
Operating Temperature Range	40°F through 105°F (5°C through 40°C)			
IP Enclosure Rating	IP-54			
Electrical Fitting	Liquid tight			
Output Connection (x2, one each side)	G 1/4 BSPP			
Return Line Connection	G 1/4 BSPP			
Single (main) Feed Line	6mm O.D. minimum recommended			

[1] *PDI: External end-of-line pressure switch also available (part #26772-2; 225 psi/15.5 bar).*
SLR: Pressure switch is optional for SLR.
External end-of-line pressure switch also available (part #26641-2; 55 psi/3.8 bar).
[2] *PDI version only. Please contact a Bijur Delimon representative for applications using soft grease.*
[3] *Motor Overload Protection needs to be provided by the host machine and/or its control system.*

2 Liter Single Phase Standard

BIJUR DELIMON INTERNATIONAL

(919) 465 4448 LOCAL
(800) 631 0168 TOLL-FREE
(919) 465 0516 FAX

WWW.BIJURDELIMON.COM

How to Order

SFX [ ][ ][ ][ ][ ][ ][ ][ ][ ][ ]

Reservoir Capacity
2– 2 liter
3– 3 liter
6– 6 liter
12– 12 liter
30– 30 liter

Reservoir Material
P– Plastic - Luran (Blue Tint)
M– Metal - Painted Steel
12 & 30 Liter reservoirs are only available in metal

Distribution System
A– SLR - 75psi Relief Valve (SLR is Oil only)
B– PDI - 450psi Relief Valve

Lubricant
S– Oil 20-1500 cSt
L– Oil 5-40 cSt
G– Grease 000-00 (40,000 cSt max)

Level Monitoring
X– None
N– Standard
- Oil.....1 x N/O float switch
- Grease...1 x N/O capacitive sensor
A– 1 x C/O float switch (Oil only, changeover, three wires. Integrated Controls options X and A only)
B– 2 x N/O, 2-position float switch (Oil only)

Pressure Monitoring
X– None
G– Pressure Gauge
N– Pressure switch (N/O) + Pressure gauge
S– Pressure switch (N/O)

Voltage
B– 24 VDC, 2.4 amps
C– 100/115 VAC, 50/60 Hz, 1.0 amps Single Phase
D– 200/230 VAC, 50/60 Hz, 0.70 amps Single Phase

Electric Connector
X– 2 x cable glands
A– DIN A for power + 1 x cable gland
B– DIN A for power + 1 x M12 for signal
C– 2 x M12 power + signal (24VDC only)
DIN & M12 connectors sold seperate

Integrated Controls
X– Terminal block
A– Terminal block + Momentary Switch + Motor 'on' LED
B– Timer
C– Controller Lite Functionality
D– Premium Controller Complete
All versions are CE approved

Method of Fill
N– Standard filler cap (Oil version has integrated strainer)
A– ISO 7241 Quick coupling male (plug)
B– Cnomo Approved quick coupling male
C– Quick coupling male for grease

ATTENTION

Additional information about the DIN and M12 connectors is available in Operator Manual # 36412 SureFire II Lubricator.

All versions are CE approved.

NOTE:

*Items in **BOLD** are standard options. Other options may have longer lead time.*

The SureFire II Lubricator features a smart part number ordering system, where you can tailor the pump to meet your needs. First, choose the reservoir capacity and material, distribution system, pump options, controller type and voltage you need. Then, put the numbers into the corresponding squares in the easy-to-use grid. You now have the customized part number.

Example: To order a 2 liter reservoir with a volumetric/PDI distribution system, standard options, terminal block and a 115 VAC motor, you would use Part #SFX2PBSNNNAXC.

NOTE:

For 3-Phase Voltage Motors refer to the following documents:

- **Datasheet #36701: Surefire II 3-Phase PDI-SLR**

BIJUR DELIMON INTERNATIONAL

(919) 465 4448 LOCAL
(800) 631 0168 TOLL-FREE
(919) 465 0516 FAX

WWW.BIJURDELIMON.COM

Dimensional Schematics

Measurements shown in millimeters.

SureFire II 2 Liter (115 VAC, 230 VAC and 24 VDC Single Phase)

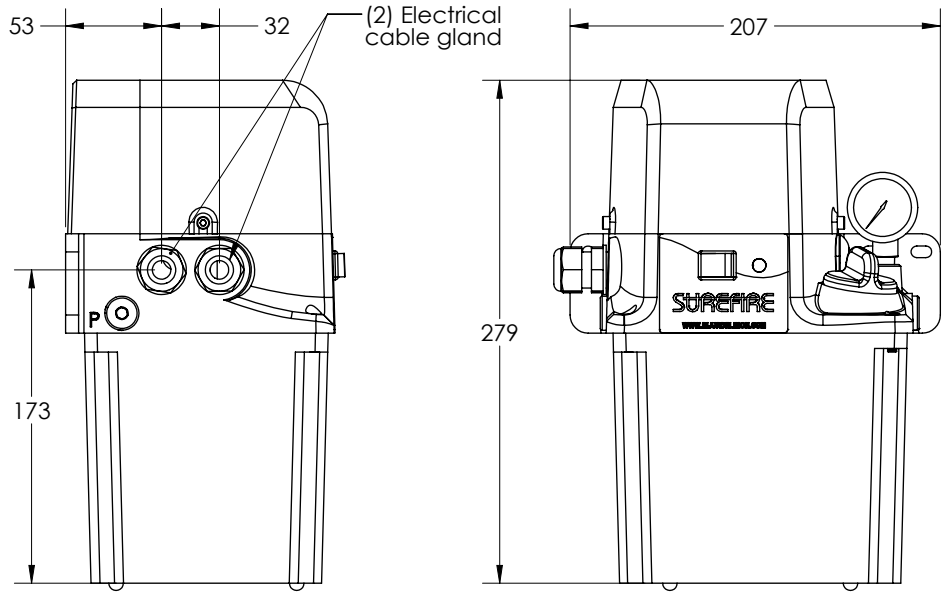

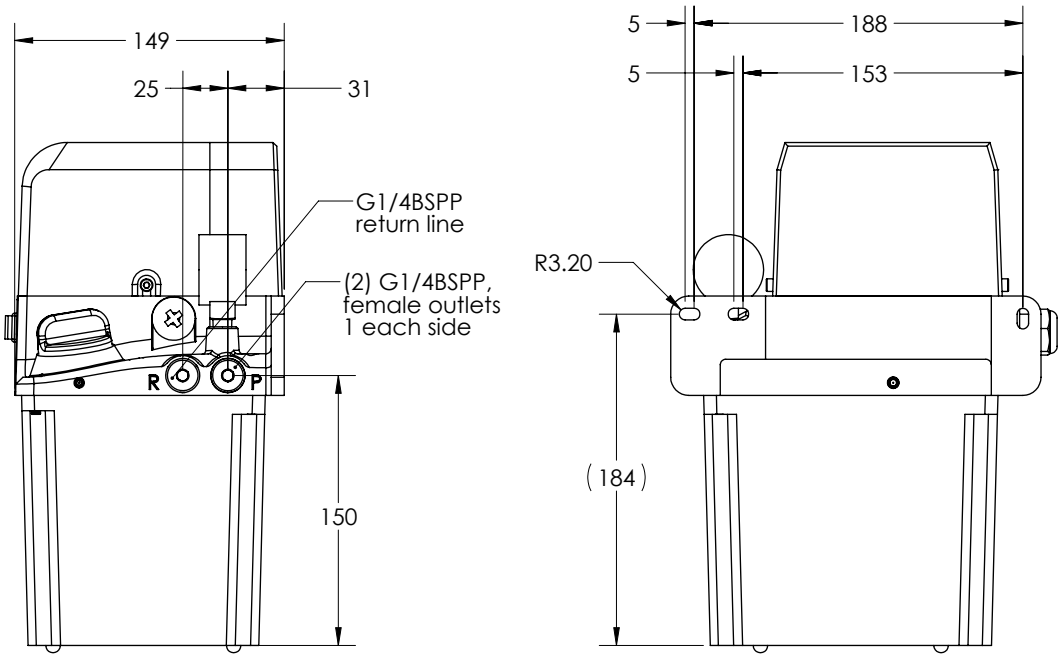

2 Liter Single Phase w/ Controller

BIJUR DELIMON INTERNATIONAL

(919) 465 4448 LOCAL
(800) 631 0168 TOLL-FREE
(919) 465 0516 FAX

WWW.BIJURDELIMON.COM

Dimensional Schematics

Measurements shown in millimeters.

SureFire II 3 Liter (115 VAC, 230 VAC and 24 VDC Single Phase)

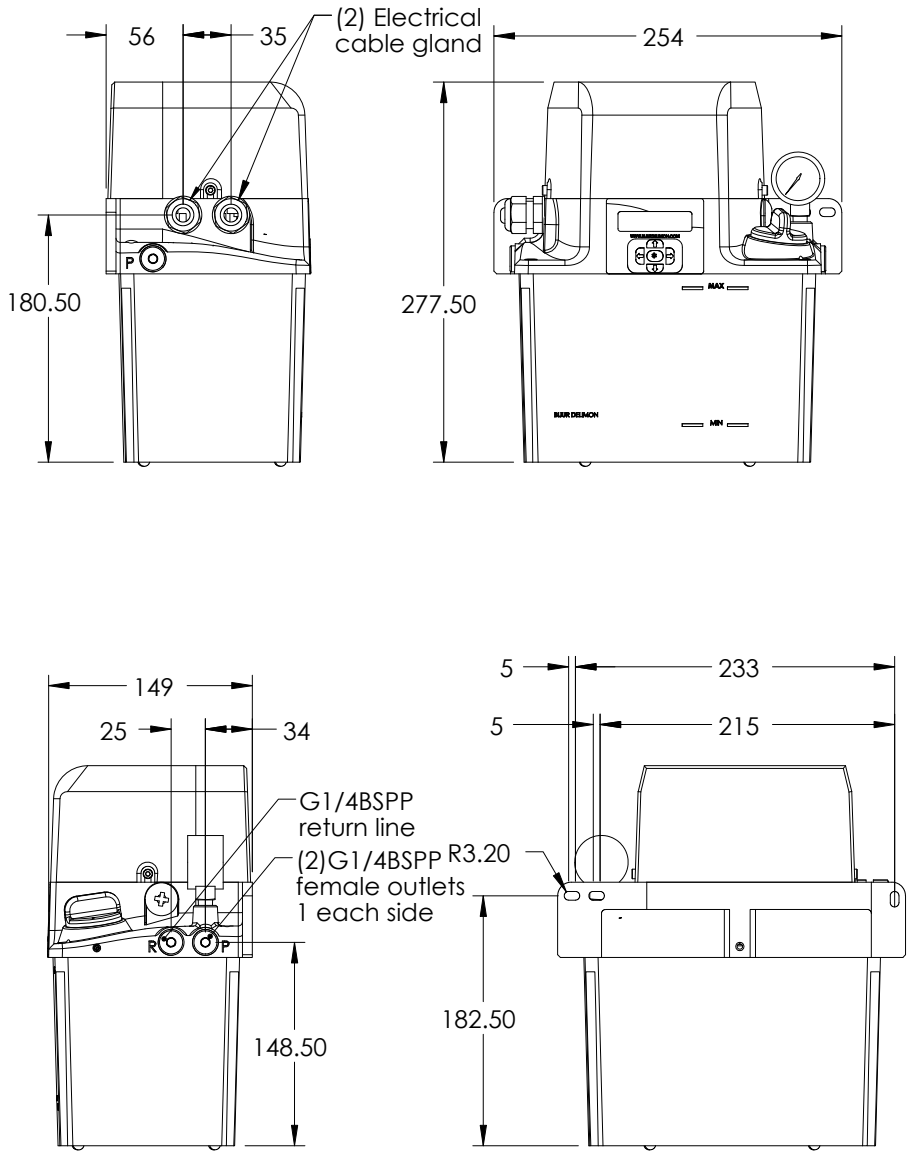

3 Liter Single Phase Standard

3 Liter Single Phase w/ Controller

BIJUR DELIMON INTERNATIONAL

(919) 465 4448 LOCAL
(800) 631 0168 TOLL-FREE
(919) 465 0516 FAX

WWW.BIJURDELIMON.COM

Dimensional Schematics

Measurements shown in millimeters.

SureFire II 6 Liter (115 VAC, 230 VAC and 24 VDC Single Phase)

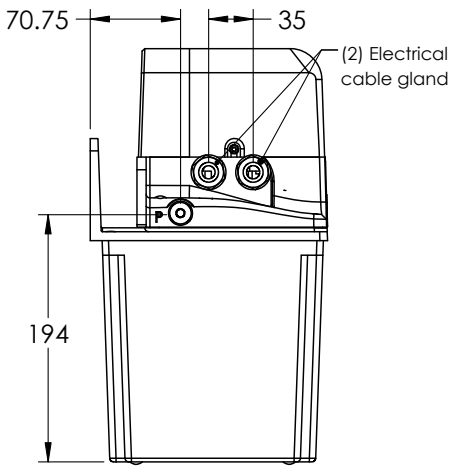

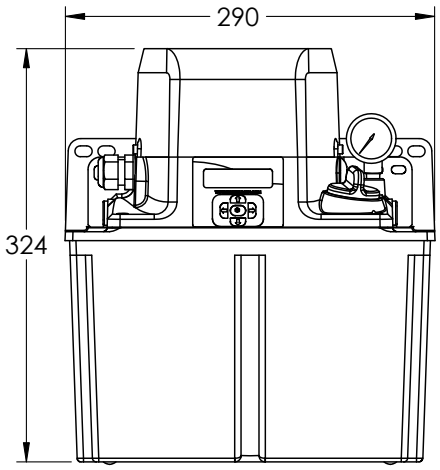

6 Liter Single Phase Standard

6 Liter Single Phase w/ Controller

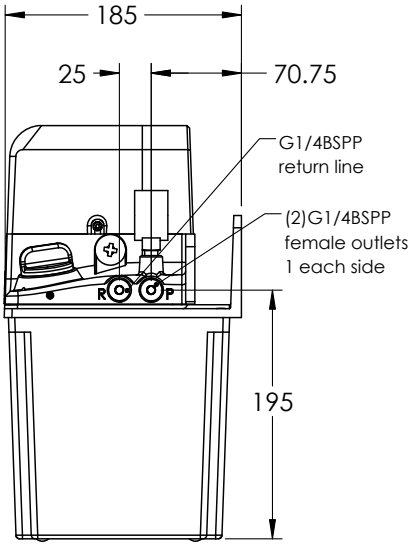

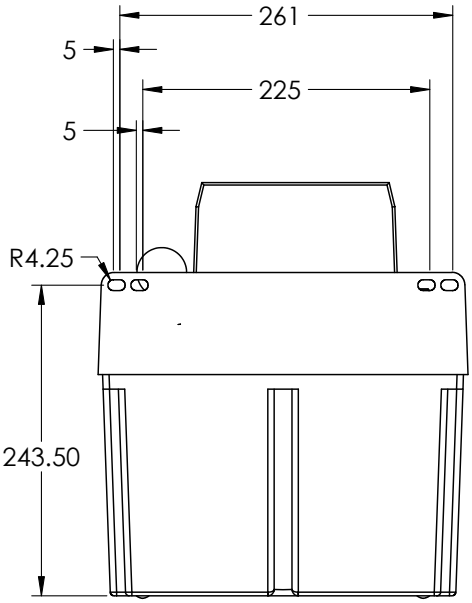

BIJUR DELIMON INTERNATIONAL

(919) 465 4448 LOCAL
(800) 631 0168 TOLL-FREE
(919) 465 0516 FAX

WWW.BIJURDELIMON.COM

Dimensional Schematics

Measurements shown in millimeters.

SureFire II 12 Liter (115 VAC, 230 VAC and 24 VDC Single Phase)

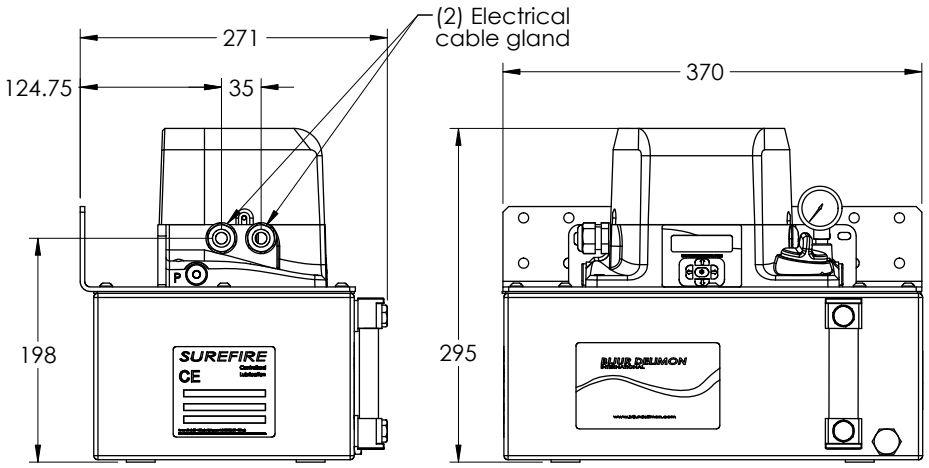

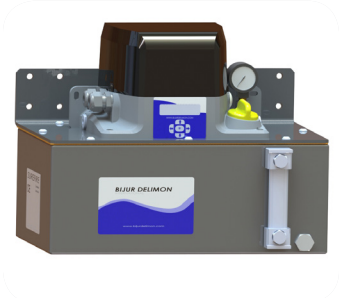

12 Liter Single Phase w/ Controller

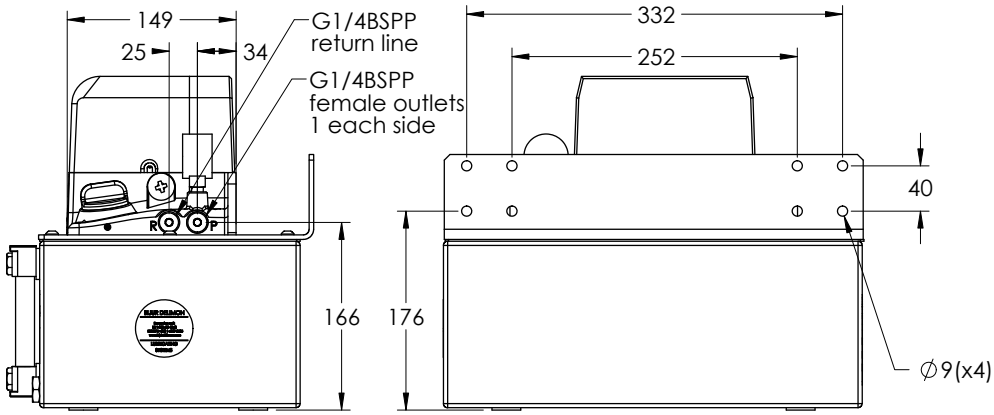

BIJUR DELIMON INTERNATIONAL

(919) 465 4448 LOCAL
(800) 631 0168 TOLL-FREE
(919) 465 0516 FAX

WWW.BIJURDELIMON.COM