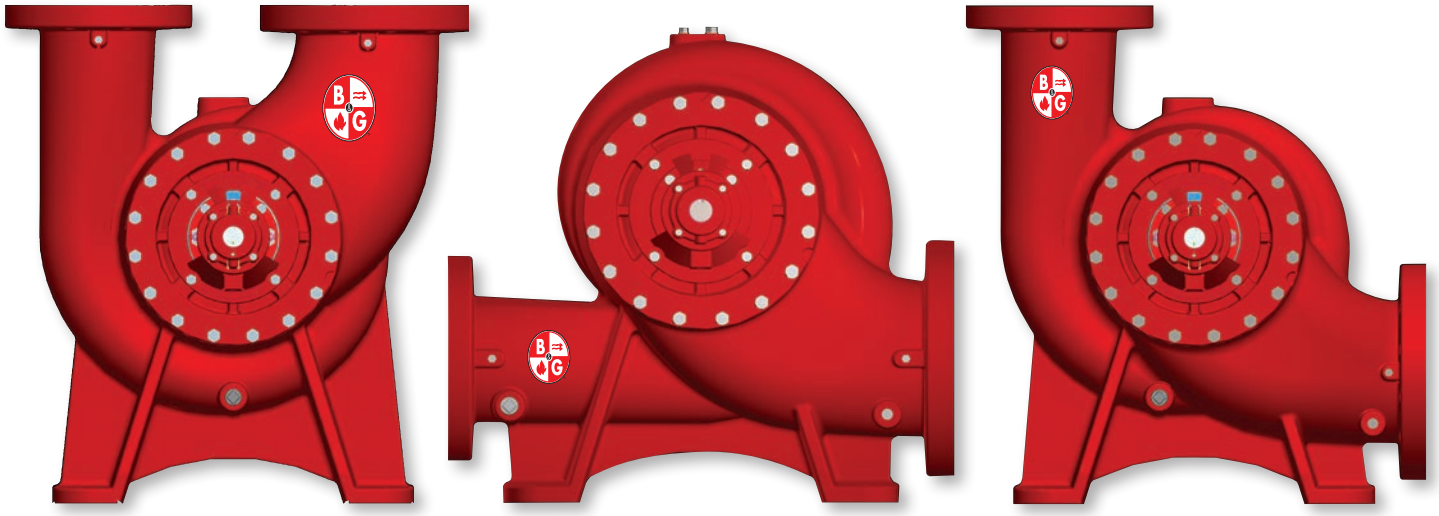

VSX

TECHNICAL BROCHURE

BUILT IN THE USA
ENGINEERED, ASSEMBLED & TESTED

Bell & Gossett
a xylem brand

B-476E

You said you needed one pump that does it all.

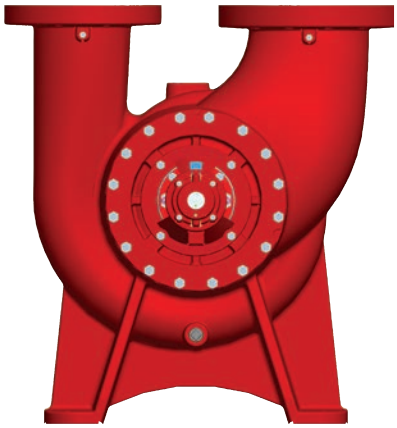

VSC

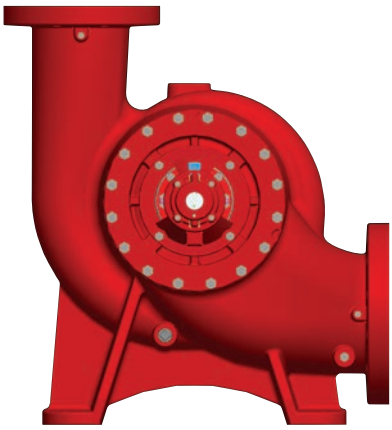

VSCS

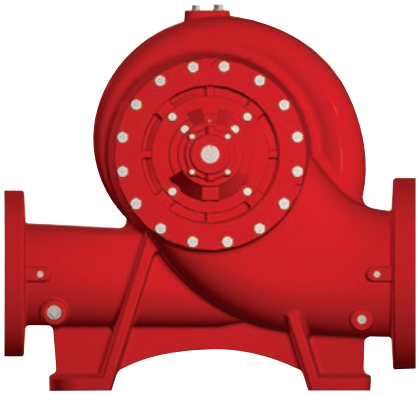

VSH

Only the VSX platform offers so many piping installation configurations, thanks to its revolutionary design. Utilizing CFD technology, we can deliver identical hydraulic performance in any flange configuration: VSC (top-top), VSCS (top-side) and VSH (side-side).In addition, every model and size is available in either right or left hand rotation providing up to six possible installation configurations. See below for availability of exact sizes and models.

The VSH®, VSC™ and VSCS® are all available in the following pump sizes:

4x6x10.5	8x10x10.5	12x14x14
4x6x13.5	8x10x13.5	12x14x17.5
4x6x17.5	8x10x17.5	12x14x22
5x6x10.5	8x10x22	14x16x15
5x6x13.5	10x12x11.5	14x16x17.5
5x6x17.5	10x12x13.5	14x16x22
6x8x10.5	10x12x17.5	16x18x19*
6x8x13.5	10x12x22	18x20x22†
6x8x17.5		

** Available in VSH and VSCS models only.*
† Available in VSH model only.

VSX Performance Range

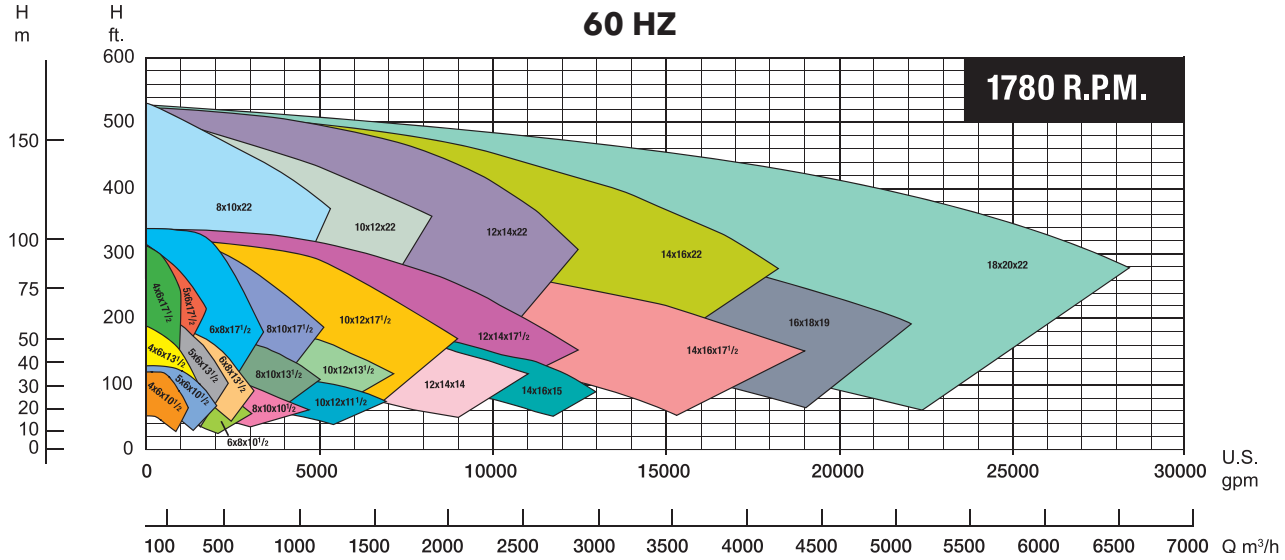

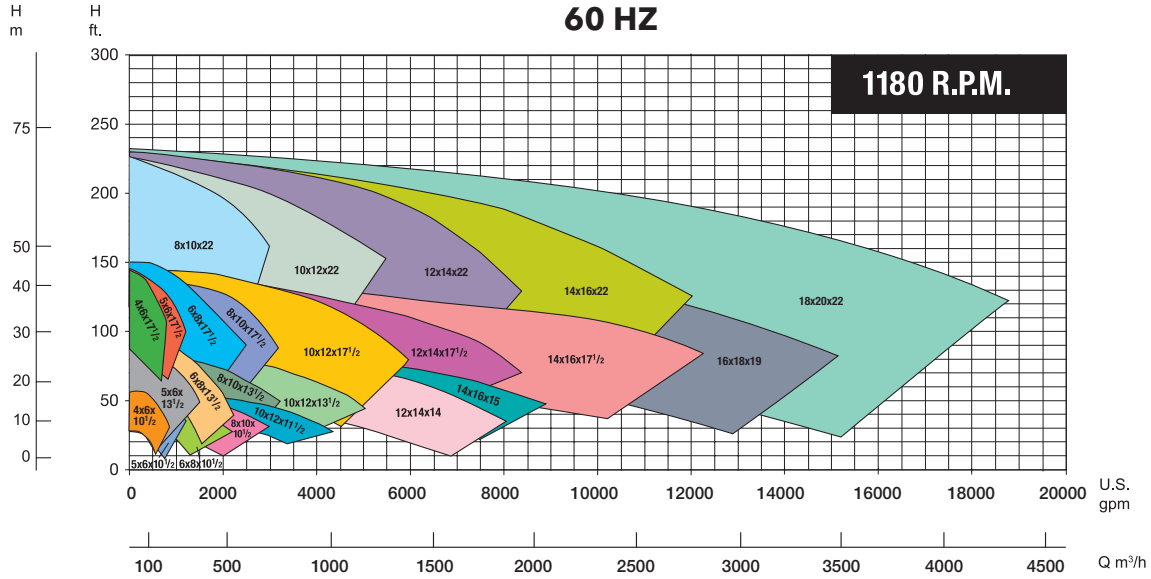

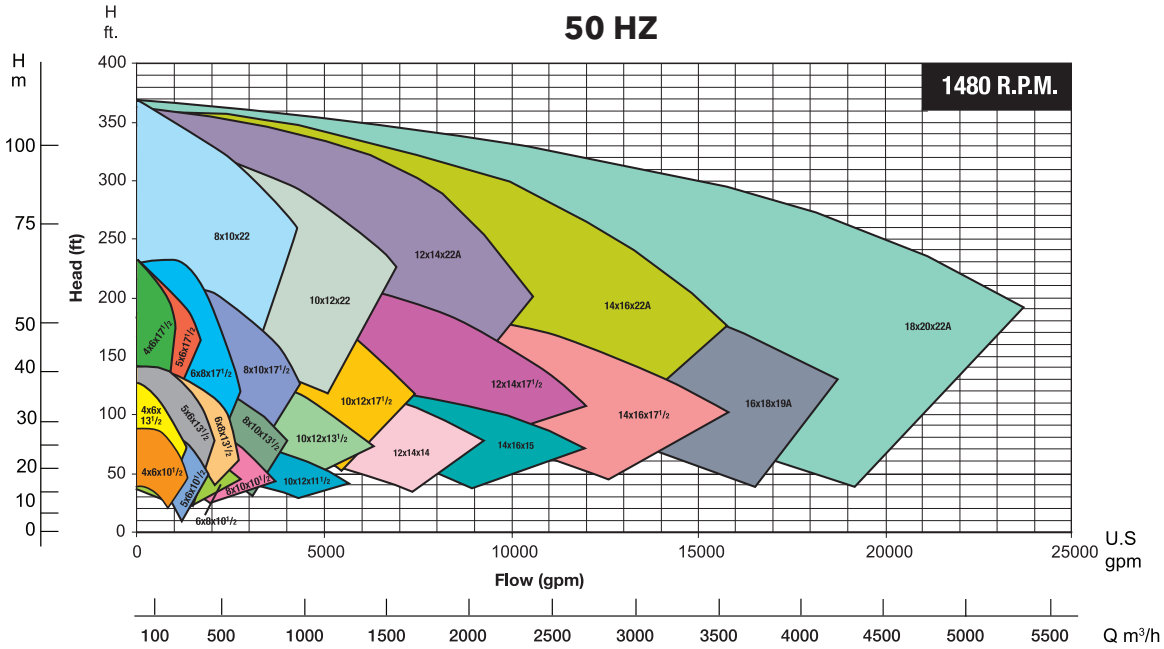

Standard & Optional VSX Application Envelope

	STANDARD OFFERING	OPTIONAL OFFERING
Working Pressure		
Standard	175 psig	-
Option	-	300 psig
Flange Rating		
Standard (For max. 175# Wrk Press)	FF flanges 125# ANSI flange drilling	-
Option (For max. 300# Wrk Press)	-	FF flanges 250# ANSI flange drilling
Temperature		
(min.)	0°F	-
(max.)	300°F	-
Volute Material		
Standard (175 psig)	Cast Iron ASTM A159†	-
Option (300 psig)	-	Cast Iron ASTM A159†
Shaft Material		
Standard	1045 Steel	416 SS
Impeller Material		
Standard (ASTM B584 Alloy C87600)	Low Zinc Silicon Bronze	-
Shaft Sleeve Material		
Standard	304 SS covering the wetted area	304 SS under mechanical seal
Case Wear Ring		
C95400	-	Aluminum Bronze
Impeller Wear Ring		
C95400	-	Aluminum Bronze
Seal Chamber		
*Mech. Seal (Std. 175 psig)	Unitized, EPR Car/SiC†	-
*Mech. Seal (Opt. 300 psig)	-	Balanced, EPR/Graphite Loaded SiC

** Refer to the individual pump submittals for specific limitations*
† 12x14x22, 14x16x22, 16x18x19 and 18x20x22 have balanced seals and ductile iron volutes, standard

VSX Performance Range

	STANDARD OFFERING	OPTIONAL OFFERING
Baseplate - Groutless		
Standard	Structural Steel	-
	-	Galvanized Drip Pan
	-	Jacking Screws
Alignment Friendly Coupling*		
Standard up to 1000 HP - suitable for VFD	Non-spacer Split Polymer Element	Spacer Split Polymer Element
Standard up to 1500 HP - Above, suitable for VFD	Non-spacer, Gear Type	Spacer, Gear Type
Coupling Guard with View Ports		
Standard	ANSI / OSHA	-
Pump Shaft Guards		
Standard	ANSI / OSHA	-

** Refer to the individual pump submittals for specific limitations*

VSX Operational Data

[Pump Size]	4x6x10.5	4x6x13.5	4x6x17.5	5x6x10.5	5x6x13.5
CASING DATA					
125# FF, ANSI Flanges Maximum 175 PSI Working Pressure Supplied with Unitized Seal					
Max. Suction pressure	175	175	175	175	175
Max. Working pressure	175	175	175	175	175
Max. hydrostatic test pressure	262	262	262	262	262
Casing material	Cast Iron	Cast Iron	Cast Iron	Cast Iron	Cast Iron
250# FF, ANSI Flanges Maximum 300 PSI Working Pressure Supplied with Unitized Seal*					
*Max. Suction pressure	200	200	200	200	200
Max. Working pressure	300	300	300	300	300
Max. hydrostatic test pressure	450	450	450	450	450
Casing material	Cast Iron	Cast Iron	Cast Iron	Cast Iron	Cast Iron
250# FF, ANSI Flanges Maximum 300 PSI Working Pressure Supplied with Balanced Seal					
Max. Suction pressure	300	300	300	300	300
Max. Working pressure	300	300	300	300	300
Max. hydrostatic test pressure	450	450	450	450	450
Casing material	Cast Iron	Cast Iron	Cast Iron	Cast Iron	Cast Iron
MECHANICAL SEAL DATA					
Mechanical Seal on sleeve for 175 and 300 psi working pressure*					
Type	Unitized	Unitized	Unitized	Unitized	Unitized
Material	EPR/Car/SiC	EPR/Car/SiC	EPR/Car/SiC	EPR/Car/SiC	EPR/Car/SiC
Min Temp - 0 deg. F	0 deg F	0 deg F	0 deg F	0 deg F	0 deg F
Max Temp - 300 deg. F	300 deg F	300 deg F	300 deg F	300 deg F	300 deg F
** Refer to max. suction pressure limitation for 300psi working pressure rating.*					
Mechanical Seal on sleeve for max. 300 psi working pressure					
Type	Balanced	Balanced	Balanced	Balanced	Balanced
Material	EPR/Graphite Loaded SiC	EPR/Graphite Loaded SiC	EPR/Graphite Loaded SiC	EPR/Graphite Loaded SiC	EPR/Graphite Loaded SiC
Min Temp	0 deg F	0 deg F	0 deg F	0 deg F	0 deg F
Max Temp	300 deg F	300 deg F	300 deg F	300 deg F	300 deg F
IMPELLER DESIGN DATA					
Number of vanes	7	6	5	6	5
Maximum Impeller Diameter	10.5″	13.5″	17.5″	10.5″	13.5″
Minimum Impeller Diameter	7″	9.5″	12.5″	7″	9″
Maximum Sphere	.63″	.82″	.845″	.55″	1.00″

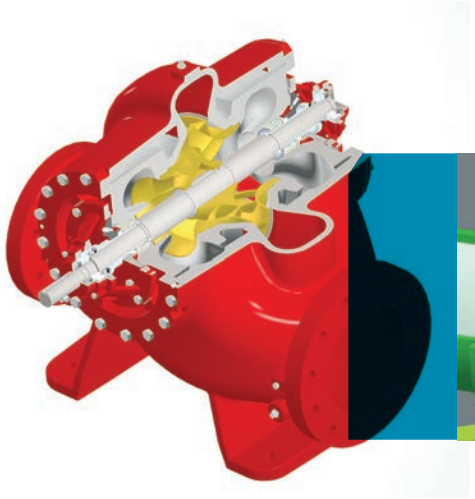

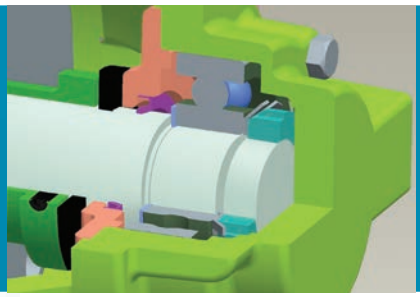

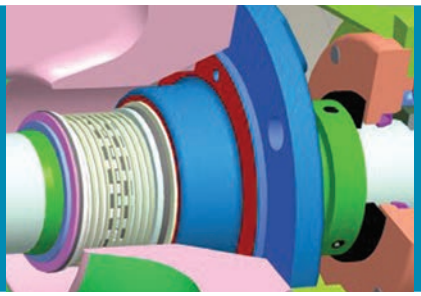

5x6x17.5	6x8x10.5	6x8x13.5	6x8x17.5	8x10x10.5	8x10x13.5	8x10x17.5	8x10x22
175	175	175	175	175	175	160	125
175	175	175	175	175	175	175	175**
262	262	262	262	262	262	262	262
Cast Iron	Cast Iron	Cast Iron	Cast Iron	Cast Iron	Cast Iron	Cast Iron	Cast Iron
200	200	200	200	200	200	160	125
300	300	300	300	300	300	300	300
450	450	450	450	450	450	450	450
Cast Iron	Cast Iron	Cast Iron	Cast Iron	Cast Iron	Cast Iron	Cast Iron	Cast Iron
300	300	300	300	300	300	300	300
300	300	300	300	300			
450	450	450	450	450	450	450	450
Cast Iron	Cast Iron	Cast Iron	Cast Iron	Cast Iron	Cast Iron	Cast Iron	Cast Iron
Unitized	Unitized	Unitized	Unitized	Unitized	Unitized	Unitized	Unitized
EPR/Car/SiC	EPR/Car/SiC	EPR/Car/SiC	EPR/Car/SiC	EPR/Car/SiC	EPR/Car/SiC	EPR/Car/SiC	EPR/Car/SiC
0 deg F	0 deg F	0 deg F	0 deg F	0 deg F	0 deg F	0 deg F	0 deg F
300 deg F	300 deg F	300 deg F	300 deg F	300 deg F	300 deg F	300 deg F	300 deg F
Balanced	Balanced	Balanced	Balanced	Balanced	Balanced	Balanced	Balanced
EPR/Graphite Loaded SiC	EPR/Graphite Loaded SiC	EPR/Graphite Loaded SiC	EPR/Graphite Loaded SiC	EPR/Graphite Loaded SiC	EPR/Graphite Loaded SiC	EPR/Graphite Loaded SiC	EPR/Graphite Loaded SiC
0 deg F	0 deg F	0 deg F	0 deg F	0 deg F	0 deg F	0 deg F	0 deg F
300 deg F	300 deg F	300 deg F	300 deg F	300 deg F	300 deg F	300 deg F	300 deg F
6	7	6	5	7	7	7	6
17.5″	10.5″	13.5″	17.5″	10.5″	13.5″	17.5″	22″
12.5″	6.5″	10″	12.5″	7″	9.5″	12.5″	16.5″
.82″	.70″	1.08″	.80″	.57″	1.00″	1.25″	1.35″

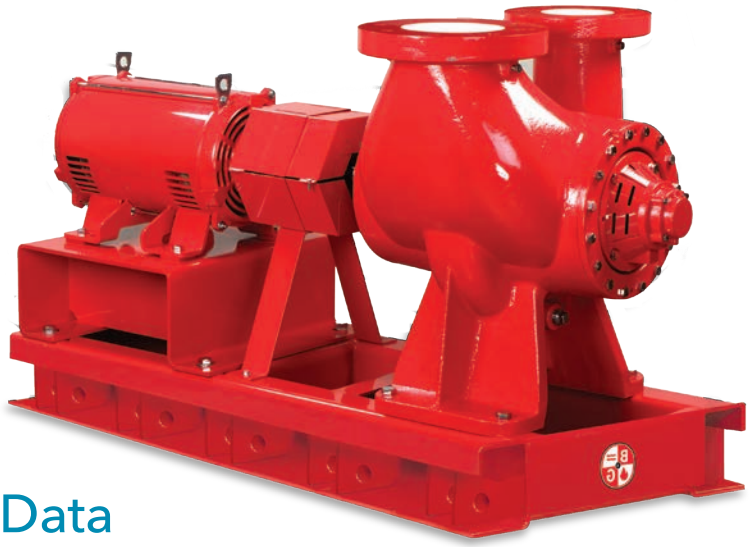

VSX Operational Data

[Pump Size]	10x12x11.5	10x12x13.5	10x12x17.5	10x12x22	12x14x14
CASING DATA					
125# FF, ANSI Flanges Maximum 175 PSI Working Pressure Supplied with Unitized Seal (Balanced Seal where noted)†					
Max. Suction pressure	175	160	160	125	160
Max. Working pressure	175	175	175	175**	175
Max. hydrostatic test pressure	262	262	262	262	262
Casing material	Cast Iron	Cast Iron	Cast Iron	Cast Iron	Cast Iron
250# FF, ANSI Flanges Maximum 300 PSI Working Pressure Supplied with Unitized Seal* (Balanced Seal where noted)†					
*Max. Suction pressure	200	160	160	125	160
Max. Working pressure	300	300	300	300	300
Max. hydrostatic test pressure	450	450	450	450	450
Casing material	Cast Iron	Cast Iron	Cast Iron	Cast Iron	Cast Iron
250# FF, ANSI Flanges Maximum 300 PSI Working Pressure Supplied with Balanced Seal					
Max. Suction pressure	300	300	300	300	300
Max. Working pressure	300	300	300	300	300
Max. hydrostatic test pressure	450	450	450	450	450
Casing material	Cast Iron	Cast Iron	Cast Iron	Cast Iron	Cast Iron
MECHANICAL SEAL DATA					
Mechanical Seal on sleeve for 175 and 300 psi working pressure*					
Type	Unitized	Unitized	Unitized	Unitized	Unitized
Material	EPR/Car/SiC	EPR/Car/SiC	EPR/Car/SiC	EPR/Car/SiC	EPR/Car/SiC
Min Temp - 0 deg. F	0 deg F	0 deg F	0 deg F	0 deg F	0 deg F
Max Temp - 300 deg. F	300 deg F	300 deg F	300 deg F	300 deg F	300 deg F
** Refer to max. suction pressure limitation for 300psi working pressure rating.*					
Mechanical Seal on sleeve for max. 300 psi working pressure					
Type	Balanced	Balanced	Balanced	Balanced	Balanced
Material	EPR/Graphite Loaded SiC	EPR/Graphite Loaded SiC	EPR/Graphite Loaded SiC	EPR/Graphite Loaded SiC	EPR/Graphite Loaded SiC
Min Temp	0 deg F	0 deg F	0 deg F	0 deg F	0 deg F
Max Temp	300 deg F	300 deg F	300 deg F	300 deg F	300 deg F
IMPELLER DESIGN DATA					
Number of vanes	7	7	7	6	7
Maximum Impeller Diameter	11.5″	13.5″	17.5″	22″	14.1″
Minimum Impeller Diameter	9.25″	10″	12.5″	16.5″	10.875″
Maximum Sphere	.60″	.91″	1.35″	1.5″	.88″

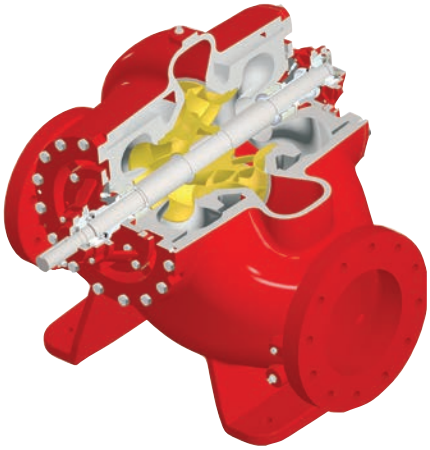

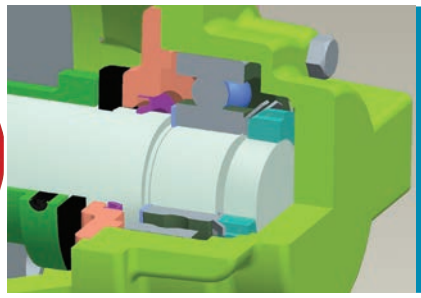

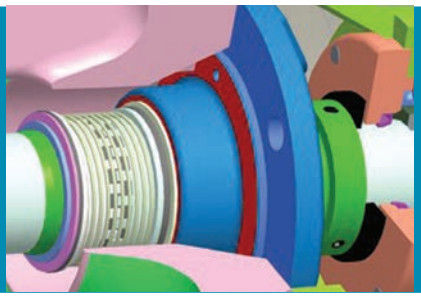

12x14x17.5	12x14x22	14x16x15	14x16x17.5	14x16x22	16x18x19	18x20x22
Balanced Seal			Balanced Seal	Balanced Seal	Balanced Seal	
125	175	160	125	175	175	175
175	175	175	175	175	175	175
262	262	262	262	262	262	262
Cast Iron	Ductile Iron	Cast Iron	Cast Iron	Ductile Iron	Ductile Iron	Ductile Iron
Balanced Seal			Balanced Seal	Balanced Seal	Balanced Seal	
125	300	160	125	300	300	300
300	300	300	300	300	300	300
450	450	450	450	450	450	450
Cast Iron	Ductile Iron	Cast Iron	Cast Iron	Ductile Iron	Ductile Iron	Ductile Iron
300	300	300	300	300	300	300
300	300	300	300	300	300	300
450	450	450	450	450	450	450
Cast Iron	Ductile Iron	Cast Iron	Cast Iron	Ductile Iron	Ductile Iron	Ductile Iron
Unitized	Balanced	Unitized	Unitized	Balanced	Balanced	Balanced
EPR/Car/SiC	EPR/Graphite Loaded SiC	EPR/Car/SiC	EPR/Car/SiC	EPR/Graphite Loaded SiC	EPR/Graphite Loaded SiC	EPR/Graphite Loaded SiC
0 deg F	0 deg F	0 deg F	0 deg F	0 deg F	0 deg F	0 deg F
300 deg F	300 deg F	300 deg F	300 deg F	300 deg F	300 deg F	300 deg F
Balanced	Balanced	Balanced	Balanced	Balanced	Balanced	Balanced
EPR/Graphite Loaded SiC	EPR/Graphite Loaded SiC	EPR/Graphite Loaded SiC	EPR/Graphite Loaded SiC	EPR/Graphite Loaded SiC	EPR/Graphite Loaded SiC	EPR/Graphite Loaded SiC
0 deg F	0 deg F	0 deg F	0 deg F	0 deg F	0 deg F	0 deg F
300 deg F	300 deg F	300 deg F	300 deg F	300 deg F	300 deg F	300 deg F
7	7	7	7	6	7	6
17.5″	22″	15.0″	17.5″	22″	19″	22″
13″	16″	11.375″	12.5″	16″	13.85″	14.85″
1.12″	1.25″	.83″	1.46″	1.72″	1.47″	1.74″

** Applicable for 1480 RPM and slower speeds. † *12x14x22, 14x16x22, 16x18x19 and 18x20x22 have balanced seals and ductile iron volutes, standard*

Reduce Space and Cost with VSX

Only the VSX offers you so many configurations for piping design flexibility. And only the top suction and discharge flange offering of the VSC offers exceptional space savings. Utilizing a VSC model can reduce your equipment footprint by up to 40 percent over traditional double-suction and large vertical inline pumps. The VSC optimizes the advantages of vertical suction and discharge piping applications by eliminating the added costs of space robbing elbows, protruding accessories and pipe supports.

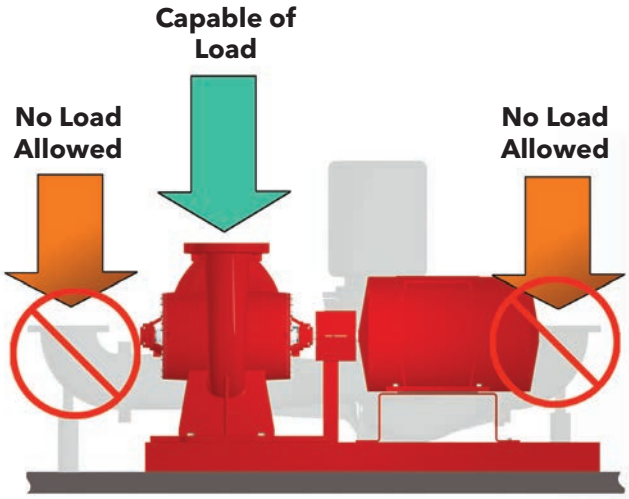

VSX-VSC Series

Floor space savings for a VSC pump as compared to a vertical in-line pump.

Series VSC
Floor Space – 13 sq. ft.

- Up to 40% smaller footprint than VIL
- Static vertical load on flanges allowed
- Pipe spool not required
- Fewer components for installation

Vertical In-Line
Floor Space – 21 sq. ft.

- Installed floor space is as much as 40% larger
- Discharge spool required to prevent hydraulic noise
- Static vertical load not allowed on valve or diffuser
- Additional components to purchase and install

ESTIMATED ADDITIONAL INSTALLED COSTS FOR VERTICAL IN-LINE PUMPS

ITEM	DESCRIPTION	4" PIPE	6" PIPE	8" PIPE	10" PIPE
1	Suction Diffuser	$ 277.00	$ 409.00	$ 777.00	$1,030.00
2	Triple Duty Valve	404.00	602.00	1,073.00	1,534.00
3	Spool Piece	111.00	172.00	204.00	406.00
4	Materials for fabricating two pipe supports	14.00	17.00	24.00	38.00
5	Time for locating and welding two pipe supports; positioning and bolting two pump accessories.	1.9 hrs.	2.1 hrs.	2.6 hrs.	2.8 hrs.
6	Labor @ $45.00 per hr	85.00	95.00	117.00	126.00
7	Additional floor space cost	131.00	286.00	976.00	774.00
8	Total estimated additional installed cost over B&G VSC Pump	$1,008.00	$1,564.00	$3,147.00	$3,840.00

PUMP SIZE	AREA FOR VERTICAL IN-LINE PUMP	AREA FOR VSC PUMP	PERCENT AREA SAVED WITH VSC PUMPS	FLOOR SPACE COST SAVINGS WITH VSC PUMPS $119 PER SQ. FT.
4"	8.1 sq. ft.	7.0 sq. ft.	14%	$ 131.00
6"	13.8 sq. ft.	11.4 sq. ft.	17%	$ 286.00
8"	20.7 sq. ft.	12.5 sq. ft.	40%	$ 976.00
10"	26.2 sq. ft.	19.7 sq. ft.	25%	$ 774.00

* Based on average construction costs per sq. ft. of various buildings as supplied by Dodge Construction Statistic for 2005.
The above estimated additional installed costs for vertical in-line pumps are conservative. Actual cost differentials will depend upon locale and piping practices employed.

VSX-VSC Series

Floor space savings for a VSX-VSC pump as compared to a horizontal split case pump.

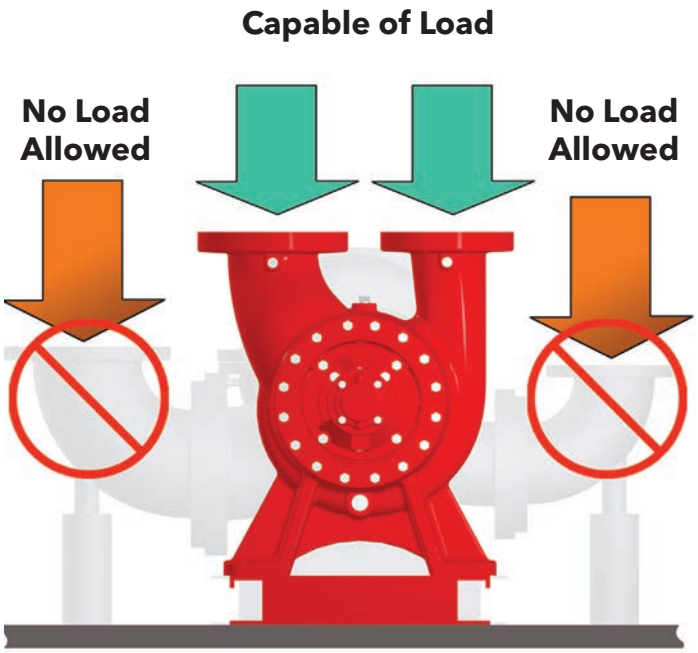

ESTIMATED ADDITIONAL INSTALLED COSTS FOR HORIZONTAL SPLIT CASE SINGLE-STAGE DOUBLE-SUCTION PUMPS

ITEM	DESCRIPTION	4" PIPE	6" PIPE	8" PIPE	10" PIPE
1	Two 90° long radius butt weld elbows	$ 24.00	$ 62.00	$ 115.00	$ 207.00
2	Four welding neck flanges	71.00	107.00	199.00	311.00
3	Materials for fabricating two pipe supports	14.00	17.00	24.00	38.00
4	Time for welding four flanges to elbows, gapping and setting flange	8 hrs	9.6 hrs	12.6 hrs	15.8 hrs
5	Time for locating and welding two pipe supports; positioning and bolting two elbow assemblies	1.9 hrs	2.1 hrs	2.6 hrs	2.8 hrs
6	Four welding neck flanges	10 hrs	11.7 hrs	15.2 hrs	18.6 hrs
7	Labor @ $45.00 per hr	450.00	527.00	684.00	837.00
8	Total estimated additional installed cost over B&G VSC Pump	$ 559.00	$ 713.00	$1,022.00	$1,393.00

FLOOR SPACE SAVED WITH B&G VSC PUMPS

PIPE SIZE	AREA FOR CONVEN-TIONAL PUMPS	AREA FOR VSC PUMPS	AREA SAVED WITH VSC PUMPS
4"	16 sq. ft.	10 sq. ft.	6 sq. ft.
6"	19 sq. ft.	12 sq. ft.	7 sq. ft.
8"	24 sq. ft.	15 sq. ft.	9 sq. ft.
10"	32 sq. ft.	20 sq. ft.	12 sq. ft.

COST SAVINGS IN FLOOR SPACE WITH B&G VSC PUMPS

PIPE SIZE	AVERAGE FLOOR SPACE SAVED WITH VSC PUMPS	SAVINGS WITH VSC PUMPS $119 PER SQ. FT.
4"	6 sq. ft.	$ 714.00
6"	7 sq. ft.	$ 833.00
8"	9 sq. ft.	$1,071.00
10"	12 sq. ft.	$1,428.00

The above estimated additional installed costs for conventional single-stage, double-suction pumps are conservative. Actual cost differentials will depend upon locale and piping practices employed.

2005 Price of Labor Estimated

* Based on average construction costs per sq. ft. of various buildings as supplied by Dodge Construction Statistic for 2005.

Allowable Static Flange Loading for VSX Pumps

The vertical split case volute design of the VSX provides optimum nozzle loading capability that others just can't match. VSX pump flanges easily support the weight of heavy piping directly on its nozzles.

The unique design of the VSX allows for a significantly higher load level of combined forces versus traditional split case pumps that can only accept singular forces acting upon the pump.

Flg Dia (in)	Fx Max (lb)	Fy Max (lb)	Fz Max (lb)	Mx Max (ft-lb)	My Max (ft-lb)	Mz Max (ft-lb)
4	1615	1215	1615	716	532	716
5	2016	1322	2016	1024	578	1024
6	2417	1428	2417	1332	625	1332
8	3219	1642	3219	1948	718	1948
10	4021	1856	4021	2564	812	2564
12	4824	2069	4824	3180	905	3180
14	5626	2283	5626	3796	998	3796
16	6428	2497	6428	4412	1091	4412
18	7230	2711	7230	5028	1185	5028
20	8032	2924	8032	5645	1278	5645

System piping can place both forces (Fx, Fy, Fz) and twisting (Mx, My, Mz) moments on a pump casing. Only pump casings and base plates of sufficient robustness can endure these types of forces.

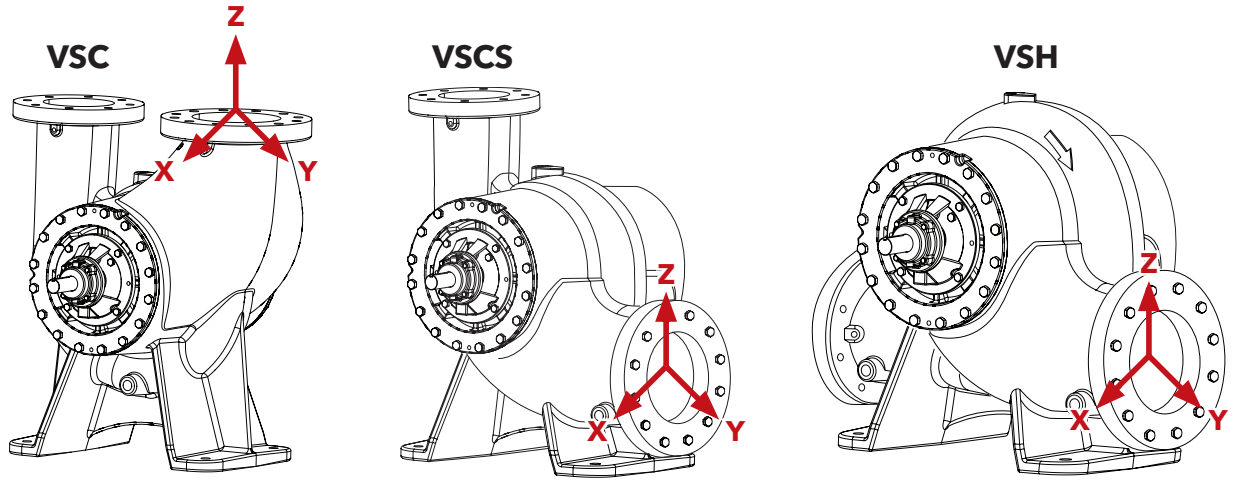

A Robust Pump Starts with Heavy Duty Flanges

Other split-case pumps are provided with flat face, 125# ANSI drilled flanges for 175# working pressure design. When 300# working pressure becomes necessary, a heavier casing becomes necessary - at a heavy price.

VSX pumps provide as standard a higher level of capability. Every VSX pump isavailable as standard with 125# ANSI flange drilling coupled with the same heavy duty 300# volute that is provided in applications requiring 175# working pressure.

The table to the right demonstrates this difference. A typical flange on a six-inch diameter pump is 1″ thick. The six-inch flange on a VSX pump is 1.69″ thick – 69% thicker than older traditional pump flanges found in the market today.

Flange	Typical Split-Case	VSX Split-Case
Diameter	Flange Thickness (in)	Flange Thickness (in)
	125#ANSI	125 & 250# ANSI
4″	0.938″	1.50″
5″	0.938″	1.62″
6″	1.000″	1.69″
8″	1.125″	1.88″
10″	1.188″	2.12″
12″	1.250″	2.25″
14″	1.375″	2.38″
16″	1.438″	2.50″
18″	1.562″	2.57″
20″	1.687″	2.69″

Typical Split-Case 125# Flange Thickness

Standard VSX 125# Flange Thickness

Groutless Structural-Steel Base Plate

Base plates must be designed with sufficient rigidity to allow the pump and motor shafts to accept the loads without resulting in undue stress, deflection or vibration. This avoids premature wear on the coupling, bearings and mechanical seals and avoids early failure of the equipment. By utilizing advanced Finite Element Analysis and design, a modern state of the art base plate can be provided.

When compared against other styles of base plates commonly found on the market today, the VSX welded-steel baseplate provides superior base stress and frequency capabilities, designed in accordance to ANSI/H.I. 1.3-2000.

- Typical rolled-channel base: the maximum amount of base plate stress reaches 41600 PSI.
- Typical fabricated-rail base: the maximum amount of base plate design stress reaches 28700 PSI.
- VSX structural-steel base plate: the maximum amount of base stress reaches 22900 PSI.

Stresses on a rolled-steel base plate are over 41000 PSI, or 180% worse than a VSX

Two common base plate designs utilized on double suction pumps were evaluated against the new VSX welded-steel base plate. Utilizing Finite Element Analysis a rolled steel ("C" channel) and a fabricated-rail design base plate were analyzed against the VSX base plate. The accompanying pictures display the maximum amount of stress anywhere on the base plate given the identical amount of loading across all three designs. The color indicates the degree of stress and its location on the base plate. In these examples, the amount of stress exposed on the VSX base plate will be no more than 22900 PSI whereas the maximum stress reached on a rolled-steel base plate will be over 41000 PSI, or 180% worse.

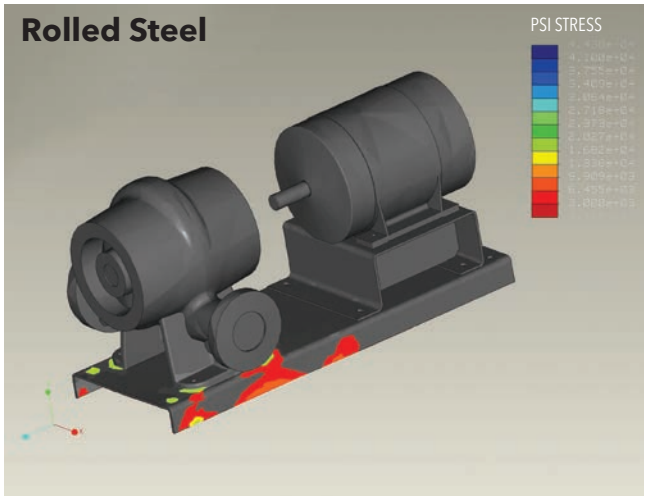

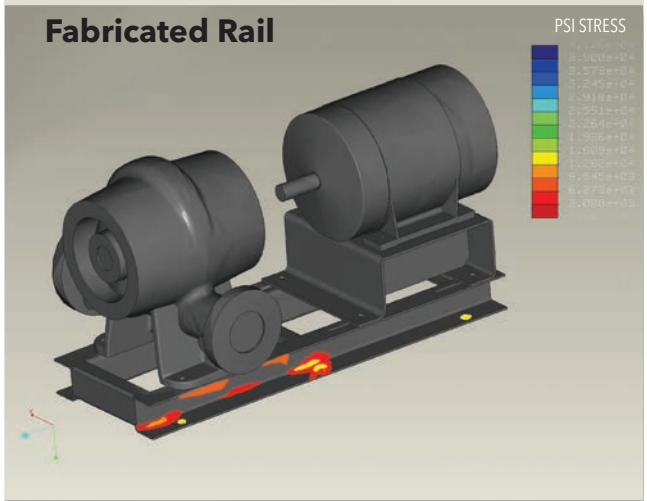

Alignment Friendly Coupling

Elastomeric couplings are specifically designed to accommodate angular shaft misalignment, as well as parallel offset of the pump and motor shafts. However, the amount of the offset and/or misalignment is dependent on the type and style of flexible coupling applied. Left unchecked, coupling misalignment has a significant impact on the overall life of the mechanical seals and bearings of the pump. Laser alignment and even infrared thermal imaging is sometimes necessary on couplings with very tight operating tolerances to insure that the proper alignment has been locked down. This process can be both time consuming as well as expensive.

Compared to the VSX coupling, typical elastomeric inserts consist of either an EPDM, Neoprene, Polyurethane or Hytrel material and are available in dropout or jaw type configuration with the following typical tolerances:

Coupling Type	VSX Non-Spacer Coupling up to 1000 HP	Jaw Type	EPDM or Neoprene	Hytrel
Angular Misalignment	2 - 4 Degrees	.9 - 1.3 Degrees	1 Degree	.25 Degrees
Parallel Misalignment	1/16" - 1/8"	.008" - .027"	.01" - .062"	.01" - .035"

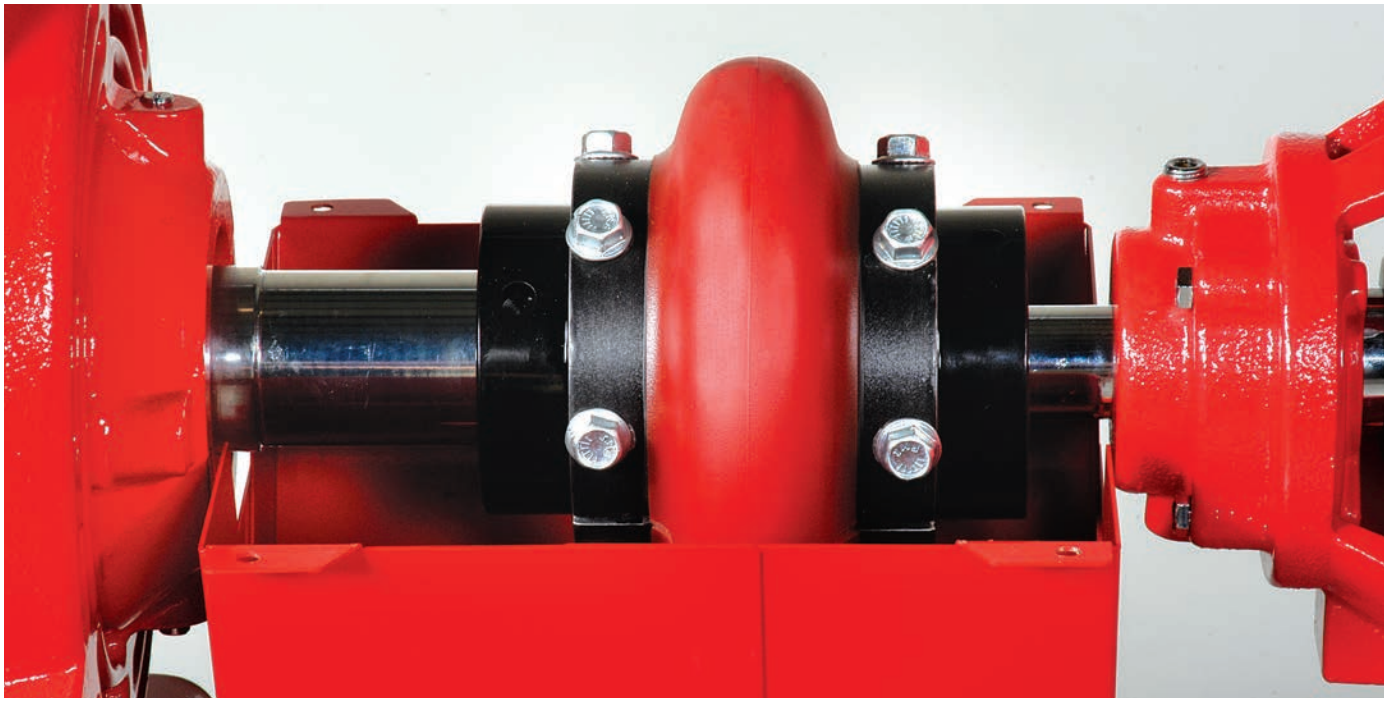

Service and support from the most trusted name in the industry – Bell & Gossett.

The Bell & Gossett name has always stood for uncompromising quality and dependability. That's evident in the way every one of our centrifugal pumps is built and backed by our outstanding customer service and support team.

Your local Bell & Gossett representative is available any time and is an experienced professional with a wealth of technical expertise. In addition to expert system and product application assistance and a wide product inventory warehoused locally, we offer ESP-Systemwize software selection program.

ESP-Systemwize is a Bell & Gossett web-based software that helps you design HVAC systems accurately, effectively and very quickly. You get fast, precise equipment selection, pump performance curves and equipment schedules, submittals, specifications and more.

ESP-Systemwize includes:

- Centrifugal Pumps
- Air/Dirt Separators
- Heat Exchangers
- Pump Suction Diffuser and Triple Duty Valve
- Expansion Tanks
- PIC Valves

We value your feedback. Please take our 3 question survey at **bellgossett.com/survey** to let us know how we are doing.

Let's Solve Water

Xylem Inc.
8200 N. Austin Avenue
Morton Grove, Illinois 60053
Phone: (847) 966-3700
Fax: (847) 965-8379
www.bellgossett.com

Bell & Gossett is a trademark of Xylem Inc. or one of its subsidiaries.
© 2017 Xylem Inc. B-476E June 2017