Installation Instructions

Original Instructions

POINT I/O 2 Current and 2 Voltage Input Analog Modules

Catalog Numbers 1734-IE2C, 1734-IE2CK, 1734-IE2V, 1734-IE2VK, series C

Catalog numbers with the suffix 'K' are conformal coated and their specifications are the same as non-conformal coated catalogs.

Topic	Page
Summary of Changes	1
Before You Begin	4
Install the Mounting Base	6
Install the I/O Module	6
Install the Removable Terminal Block	7
Remove the Mounting Base	8
Wire the Module	8
Communicate with Your Module	10
Interpret Status Indicators	10
Specifications	11
Additional Resources	13

Summary of Changes

This publication contains the following new or updated information. This list includes substantive updates only and is not intended to reflect all changes.

Topic	Page
Updated input resolution for 1734-IE2V and 1734-IE2VK	11

ATTENTION: Read this document and the documents listed in the Additional Resources section about installation, configuration and operation of this equipment before you install, configure, operate or maintain this product. Users are required to familiarize themselves with installation and wiring instructions in addition to requirements of all applicable codes, laws, and standards.

Activities including installation, adjustments, putting into service, use, assembly, disassembly, and maintenance are required to be carried out by suitably trained personnel in accordance with applicable code of practice. If this equipment is used in a manner not specified by the manufacturer, the protection provided by the equipment may be impaired.

注意：在安装、配置、操作和维护本产品前，请阅读本文档以及 “其他资源” 部分列出的有关设备安装、配置和操作的相应文档。除了所有适用规范、法律和标准的相关要求之外，用户还必须熟悉安装和接线说明。

安装、调整、投运、使用、组装、拆卸和维护等各项操作必须由经过适当训练的专业人员按照适用的操作规范实施。

如果未按照制造商指定的方式使用该设备，则可能会损害设备提供的保护。

ATENCIÓN: Antes de instalar, configurar, poner en funcionamiento o realizar el mantenimiento de este producto, lea este documento y los documentos listados en la sección Recursos adicionales acerca de la instalación, configuración y operación de este equipo. Los usuarios deben familiarizarse con las instrucciones de instalación y cableado y con los requisitos de todos los códigos, leyes y estándares vigentes.

El personal debidamente capacitado debe realizar las actividades relacionadas a la instalación, ajustes, puesta en servicio, uso, ensamblaje, desensamblaje y mantenimiento de conformidad con el código de práctica aplicable. Si este equipo se usa de una manera no especificada por el fabricante, la protección provista por el equipo puede resultar afectada.

ATENÇÃO: Leia este e os demais documentos sobre instalação, configuração e operação do equipamento que estão na seção Recursos adicionais antes de instalar, configurar, operar ou manter este produto. Os usuários devem se familiarizar com as instruções de instalação e fiação além das especificações para todos os códigos, leis e normas aplicáveis.

É necessário que as atividades, incluindo instalação, ajustes, colocação em serviço, utilização, montagem, desmontagem e manutenção sejam realizadas por pessoal qualificado e especializado, de acordo com o código de prática aplicável.

Caso este equipamento seja utilizado de maneira não estabelecida pelo fabricante, a proteção fornecida pelo equipamento pode ficar prejudicada.

ВНИМАНИЕ: Перед тем как устанавливать, настраивать, эксплуатировать или обслуживать данное оборудование, прочитайте этот документ и документы, перечисленные в разделе «Дополнительные ресурсы». В этих документах изложены сведения об установке, настройке и эксплуатации данного оборудования. Пользователи обязаны ознакомиться с инструкциями по установке и прокладке соединений, а также с требованиями всех применимых норм, законов и стандартов.

Все действия, включая установку, наладку, ввод в эксплуатацию, использование, сборку, разборку и техническое обслуживание, должны выполняться обученным персоналом в соответствии с применимыми нормами и правилами.

Если оборудование используется не предусмотренным производителем образом, защита оборудования может быть нарушена.

注意：本製品を設置、構成、稼動または保守する前に、本書および本機器の設置、設定、操作についての参考資料の該当箇所に記載されている文書に目を通してください。ユーザは、すべての該当する条例、法律、規格の要件に加えて、設置および配線の手順に習熟している必要があります。

設置調整、運転の開始、使用、組立て、解体、保守を含む諸作業は、該当する実施規則に従って訓練を受けた適切な作業員が実行する必要があります。

本機器が製造メーカにより指定されていない方法で使用されている場合、機器により提供されている保護が損なわれる恐れがあります。

ACHTUNG: Lesen Sie dieses Dokument und die im Abschnitt „Weitere Informationen"aufgeführten Dokumente, die Informationen zu Installation, Konfiguration und Bedienung dieses Produkts enthalten, bevor Sie dieses Produkt installieren, konfigurieren, bedienen oder warten. Anwender müssen sich neben den Bestimmungen aller anwendbaren Vorschriften, Gesetze und Normen zusätzlich mit den Installations- und Verdrahtungsanweisungen vertraut machen.

Arbeiten im Rahmen der Installation, Anpassung, Inbetriebnahme, Verwendung, Montage, Demontage oder Instandhaltung dürfen nur durch ausreichend geschulte Mitarbeiter und in Übereinstimmung mit den anwendbaren Ausführungsvorschriften vorgenommen werden.

Wenn das Gerät in einer Weise verwendet wird, die vom Hersteller nicht vorgesehen ist, kann die Schutzfunktion beeinträchtigt sein.

ATTENTION : Lisez ce document et les documents listés dans la section Ressources complémentaires relatifs à l'installation, la configuration et le fonctionnement de cet équipement avant d'installer, configurer, utiliser ou entretenir ce produit. Les utilisateurs doivent se familiariser avec les instructions d'installation et de câblage en plus des exigences relatives aux codes, lois et normes en vigueur.

Les activités relatives à l'installation, le réglage, la mise en service, l'utilisation, l'assemblage, le démontage et l'entretien doivent être réalisées par des personnes formées selon le code de pratique en vigueur.

Si cet équipement est utilisé d'une façon qui n'a pas été définie par le fabricant, la protection fournie par l'équipement peut être compromise.

주의 : 본 제품 설치 , 설정 , 작동 또는 유지 보수하기 전에 본 문서를 포함하여 설치 , 설정 및 작동에 관한 참고 자료 섹션의 문서들을 반드시 읽고 숙지하십시오 . 사용자는 모든 관련 규정 , 법규 및 표준에서 요구하는 사항에 대해 반드시 설치 및 배선 지침을 숙지해야 합니다 .

설치 , 조정 , 가동 , 사용 , 조립 , 분해 , 유지보수 등 모든 작업은 관련 규정에 따라 적절한 교육을 받은 사용자를 통해서만 수행해야 합니다 .

본 장비를 제조사가 명시하지 않은 방법으로 사용하면 장비의 보호 기능이 손상될 수 있습니다 .

ATTENZIONE Prima di installare, configurare ed utilizzare il prodotto, o effettuare interventi di manutenzione su di esso, leggere il presente documento ed i documenti elencati nella sezione "Altre risorse", riguardanti l'installazione, la configurazione ed il funzionamento dell'apparecchiatura. Gli utenti devono leggere e comprendere le istruzioni di installazione e cablaggio, oltre ai requisiti previsti dalle leggi, codici e standard applicabili.

Le attività come installazione, regolazioni, utilizzo, assemblaggio, disassemblaggio e manutenzione devono essere svolte da personale adeguatamente addestrato, nel rispetto delle procedure previste.

Qualora l'apparecchio venga utilizzato con modalità diverse da quanto previsto dal produttore, la sua funzione di protezione potrebbe venire compromessa.

DİKKAT: Bu ürünün kurulumu, yapılandırılması, işletilmesi veya bakımı öncesinde bu dokümanı ve bu ekipmanın kurulumu, yapılandırılması ve işletimi ile ilgili İlave Kaynaklar bölümünde yer listelenmiş dokümanları okuyun. Kullanıcılar yürürlükteki tüm yönetmelikler, yasalar ve standartların gereksinimlerine ek olarak kurulum ve kablolama talimatlarını da öğrenmek zorundadır.

Kurulum, ayarlama, hizmete alma, kullanma, parçaları birleştirme, parçaları sökme ve bakım gibi aktiviteler sadece uygun eğitimleri almış kişiler tarafından yürürlükteki uygulama yönetmeliklerine uygun şekilde yapılabilir.

Bu ekipman üretici tarafından belirlenmiş amacın dışında kullanılırsa, ekipman tarafından sağlanan koruma bozulabilir.

注意事項：在安裝、設定、操作或維護本產品前，請先閱讀此文件以及列於 「其他資源」章節中有關安裝、設定與操作此設備的文件。使用者必須熟悉安裝和配線指示，並符合所有法規、法律和標準要求。

包括安裝、調整、交付使用、使用、組裝、拆卸和維護等動作都必須交由已經過適當訓練的人員進行，以符合適用的實作法規。

如果將設備用於非製造商指定的用途時，可能會造成設備所提供的保護功能受損。

POZOR: Než začnete instalovat, konfigurovat či provozovat tento výrobek nebo provádět jeho údržbu, přečtěte si tento dokument a dokumenty uvedené v části Dodatečné zdroje ohledně instalace, konfigurace a provozu tohoto zařízení. Uživatelé se musejí vedle požadavků všech relevantních vyhlášek, zákonů a norem nutně seznámit také s pokyny pro instalaci a elektrické zapojení.

Činnosti zahrnující instalaci, nastavení, uvedení do provozu, užívání, montáž, demontáž a údržbu musí vykonávat vhodně proškolený personál v souladu s příslušnými prováděcími předpisy.

Pokud se toto zařízení používá způsobem neodpovídajícím specifikaci výrobce, může být narušena ochrana, kterou toto zařízení poskytuje.

UWAGA: Przed instalacją, konfiguracją, użytkowaniem lub konserwacją tego produktu należy przeczytać niniejszy dokument oraz wszystkie dokumenty wymienione w sekcji Dodatkowe źródła omawiające instalację, konfigurację i procedury użytkowania tego urządzenia. Użytkownicy mają obowiązek zapoznać się z instrukcjami dotyczącymi instalacji oraz oprzewodowania, jak również z obowiązującymi kodeksami, prawem i normami.

Działania obejmujące instalację, regulację, przekazanie do użytkowania, użytkowanie, montaż, demontaż oraz konserwację muszą być wykonywane przez odpowiednio przeszkolony personel zgodnie z obowiązującym kodeksem postępowania.

Jeśli urządzenie jest użytkowane w sposób inny niż określony przez producenta, zabezpieczenie zapewniane przez urządzenie może zostać ograniczone.

OBS! Läs detta dokument samt dokumentet, som står listat i avsnittet Övriga resurser, om installation, konfigurering och drift av denna utrustning innan du installerar, konfigurerar eller börjar använda eller utföra underhållsarbete på produkten. Användare måste bekanta sig med instruktioner för installation och kabeldragning, förutom krav enligt gällande koder, lagar och standarder.

Åtgärder som installation, justering, service, användning, montering, demontering och underhållsarbete måste utföras av personal med lämplig utbildning enligt lämpligt bruk.

Om denna utrustning används på ett sätt som inte anges av tillverkaren kan det hända att utrustningens skyddsanordningar försätts ur funktion.

LET OP: Lees dit document en de documenten die genoemd worden in de paragraaf Aanvullende informatie over de installatie, configuratie en bediening van deze apparatuur voordat u dit product installeert, configureert, bediend of onderhoudt. Gebruikers moeten zich vertrouwd maken met de installatie en de bedradingsinstructies, naast de vereisten van alle toepasselijke regels, wetten en normen.

Activiteiten zoals het installeren, afstellen, in gebruik stellen, gebruiken, monteren, demonteren en het uitvoeren van onderhoud mogen uitsluitend worden uitgevoerd door hiervoor opgeleid personeel en in overeenstemming met de geldende praktijkregels.

Indien de apparatuur wordt gebruikt op een wijze die niet is gespecificeerd door de fabrikant, dan bestaat het gevaar dat de beveiliging van de apparatuur niet goed werkt.

ATTENTION: To comply with the CE Low Voltage Directive (LVD), this equipment must be powered from a source compliant with the Safety Extra Low Voltage (SELV) or Protected Extra Low Voltage (PELV).

WARNING:
- Secure any external connections that mate to this equipment by using screws, sliding latches, threaded connectors, or other means provided with this product.
- Do not disconnect equipment unless power has been removed or the area is known to be nonhazardous.

Environment and Enclosure

ATTENTION: This equipment is intended for use in a Pollution Degree 2 industrial environment, in overvoltage Category II applications (as defined in EN/IEC 60664-1), at altitudes up to 2000 m (6562 ft) without derating.
This equipment is not intended for use in residential environments and may not provide adequate protection to radio communication services in such environments.

This equipment is supplied as open-type equipment for indoor use. It must be mounted within an enclosure that is suitably designed for those specific environmental conditions that will be present and appropriately designed to help prevent personal injury resulting from accessibility to live parts. The enclosure must have suitable flame-retardant properties to help prevent or minimize the spread of flame, complying with a flame spread rating of 5VA or be approved for the application if nonmetallic. The interior of the enclosure must be accessible only by the use of a tool. Subsequent sections of this publication may contain more information regarding specific enclosure type ratings that are required to comply with certain product safety certifications.

In addition to this publication, see the following:
- Industrial Automation Wiring and Grounding Guidelines, publication 1770-4.1, for additional installation requirements.
- NEMA Standard 250 and EN/IEC 60529, as applicable, for explanations of the degrees of protection provided by enclosures.

Prevent Electrostatic Discharge

ATTENTION: This equipment is sensitive to electrostatic discharge, which can cause internal damage and affect normal operation. Follow these guidelines when you handle this equipment:
- Touch a grounded object to discharge potential static.
- Wear an approved grounding wriststrap.
- Do not touch connectors or pins on component boards.
- Do not touch circuit components inside the equipment.
- Use a static-safe workstation, if available.
- Store the equipment in appropriate static-safe packaging when not in use.

North American Hazardous Location Approval

The Following Information Applies When Operating This Equipment In Hazardous Locations.	**Informations sur l'utilisation de cet équipement en environnements dangereux.**
Products marked "CL I, DIV 2, GP A, B, C, D" are suitable for use in Class I Division 2 Groups A, B, C, D, Hazardous Locations and nonhazardous locations only. Each product is supplied with markings on the rating nameplate indicating the hazardous location temperature code. When combining products within a system, the most adverse temperature code (lowest "T" number) may be used to help determine the overall temperature code of the system. Combinations of equipment in your system are subject to investigation by the local Authority Having Jurisdiction at the time of installation.	Les produits marqués "CL I, DIV 2, GP A, B, C, D" ne conviennent qu'à une utilisation en environnements de Classe I Division 2 Groupes A, B, C, D dangereux et non dangereux. Chaque produit est livré avec des marquages sur sa plaque d'identification qui indiquent le code de température pour les environnements dangereux. Lorsque plusieurs produits sont combinés dans un système, le code de température le plus défavorable (code de température le plus faible) peut être utilisé pour déterminer le code de température global du système. Les combinaisons d'équipements dans le système sont sujettes à inspection par les autorités locales qualifiées au moment de l'installation.
WARNING: **Explosion Hazard –** • Do not disconnect equipment unless power has been removed or the area is known to be nonhazardous. • Do not disconnect connections to this equipment unless power has been removed or the area is known to be nonhazardous. Secure any external connections that mate to this equipment by using screws, sliding latches, threaded connectors, or other means provided with this product. • Substitution of components may impair suitability for Class I Division 2.	**AVERTISSEMENT:** **Risque d'Explosion –** • Couper le courant ou s'assurer que l'environnement est classé non dangereux avant de débrancher l'équipement. • Couper le courant ou s'assurer que l'environnement est classé non dangereux avant de débrancher les connecteurs. Fixer tous les connecteurs externes reliés à cet équipement à l'aide de vis, loquets coulissants, connecteurs filetés ou autres moyens fournis avec ce produit. • La substitution de composants peut rendre cet équipement inadapté à une utilisation en environnement de Classe I Division 2.

UK and European Hazardous Location Approval

The following applies to products marked Ⓔx II 3 G:

- Are intended for use in potentially explosive atmospheres as defined by UKEX regulation 2016 No. 1107 and European Union Directive 2014/34/EU and has been found to comply with the Essential Health and Safety Requirements relating to the design and construction of Category 3 equipment that is intended for use in Zone 2 potentially explosive atmospheres, given in Schedule 1 of UKEX and Annex II of this Directive.
- Compliance with the Essential Health and Safety Requirements has been assured by compliance with EN IEC 60079-7 and EN IEC 60079-0.
- Are Equipment Group II, Equipment Category 3, and comply with the Essential Health and Safety Requirements relating to the design and construction of such equipment given in Schedule 1 of UKEX and Annex II of EU Directive 2014/34/EU. See the UKEx and EU Declaration of Conformity at rok.auto/certifications for details.
- The type of protection is Ex ec IIC T4 Gc according to EN IEC 60079-0:2018, EXPLOSIVE ATMOSPHERES - PART 0: EQUIPMENT - GENERAL REQUIREMENTS, Issue Date 07/2018, and CENELEC ENIEC 60079-7:2015+A1:2018, Explosive atmospheres. Equipment protection by increased safety "e".
- Comply with Standard EN IEC 60079-0:2018, EXPLOSIVE ATMOSPHERES - PART 0: EQUIPMENT - GENERAL REQUIREMENTS, Issue Date 07/2018, CENELEC EN IEC 60079-7:2015+A1:2018 Explosive atmospheres. Equipment protection by increased safety "e", reference certificate number DEMKO 04 ATEX 0330347X and UL22UKEX2478X.
- Are intended for use in areas in which explosive atmospheres caused by gases, vapors, mists, or air are unlikely to occur, or are likely to occur only infrequently and for short periods. Such locations correspond to Zone 2 classification according to UKEX regulation 2016 No. 1107 and ATEX directive 2014/34/EU.
- May have catalog numbers followed by a “K” to indicate a conformal coating option.

IEC Hazardous Location Approval

The following applies to products marked with IECEx certification:

- Are intended for use in areas in which explosive atmospheres caused by gases, vapors, mists, or air are unlikely to occur, or are likely to occur only infrequently and for short periods. Such locations correspond to Zone 2 classification to IEC 60079-0.
- The type of protection is Ex eC IIC T4 Gc according to IEC 60079-0 and IEC 60079-7.
- Comply with Standards IEC 60079-0, Explosive atmospheres - Part 0: Equipment - General requirements, Edition 7, Revision Date 2017 and IEC 60079-7, 5.1 Edition revision date 2017, Explosive atmospheres - Part 7: Equipment protection by increased safety "e", reference IECEx certificate number IECEx UL 20.0072X.
- May have catalog numbers followed by a "K" to indicate a conformal coating option.

WARNING: Special Conditions for Safe Use

- This equipment is not resistant to sunlight or other sources of UV radiation.
- This equipment shall be mounted in an UKEX/ATEX/IECEx Zone 2 certified enclosure with a minimum ingress protection rating of at least IP54 (in accordance with EN/IEC 60079-0) and used in an environment of not more than Pollution Degree 2 (as defined in EN/IEC 60664-1) when applied in Zone 2 environments. The enclosure must be accessible only by the use of a tool.
- This equipment shall be used within its specified ratings that are defined by Rockwell Automation.
- Transient protection shall be provided that is set at a level not exceeding 140% of the peak rated voltage at the supply terminals to the equipment.
- The instructions in the user manual shall be observed.
- This equipment must be used only with UKEX/ATEX/IECEx certified Rockwell Automation backplanes.
- Earthing is accomplished through mounting of modules on rail.
- Devices shall be used in an environment of not more than Pollution Degree 2.
- The secondary of a current transformer shall not be open-circuited when applied in Class I Zone 2 environments.

ATTENTION:

- If this equipment is used in a manner that is not specified by the manufacturer, the protection that is provided by the equipment may be impaired.
- Read this document and the documents that are listed in the Additional Resources section about installation, configuration, and operation of this equipment before you install, configure, operate, or maintain this product. Users are required to familiarize themselves with installation and wiring instructions in addition to requirements of all applicable codes, laws, and standards.
- Installation, adjustments, putting into service, use, assembly, disassembly, and maintenance are required to be carried out by suitably trained personnel in accordance with applicable code of practice. In case of malfunction or damage, no attempts at repair should be made. The module should be returned to the manufacturer for repair. Do not dismantle the module.
- This equipment is certified for use only within the surrounding air temperature range of -20...+55 °C (-4...+131 °F). The equipment must not be used outside of this range.
- Use only a soft dry anti-static cloth to wipe down equipment. Do not use any cleaning agents.

Before You Begin

This series C of the POINT I/O™ 2 current and 2 voltage input analog modules can be used with the following:

- DeviceNet® and PROFIBUS adapters
- ControlNet® and EtherNet/IP™ adapters, using Studio 5000 Logix Designer® application, version 20 or later.

See the figures to familiarize yourself with major parts of the module. The wiring base assembly is one of the following:

- A two piece terminal base, 1734-TB, 1734-TBS, 1734-TB3, or 1734-TB3S, which consists of a mounting base (1734-MB) and a Removable Terminal Block (RTB), 1734-RTB, 1734-RTBS, 1734-RTB3, or 1734-RTB3S
- A one-piece terminal base 1734-TOP, 1734-TOPS, 1734-TOP3, or 1734-TOP3S

POINT I/O Module with 1734-TB, 1734-TBS, 1734-TB3, or 1734-TB3S Wiring Base Assembly

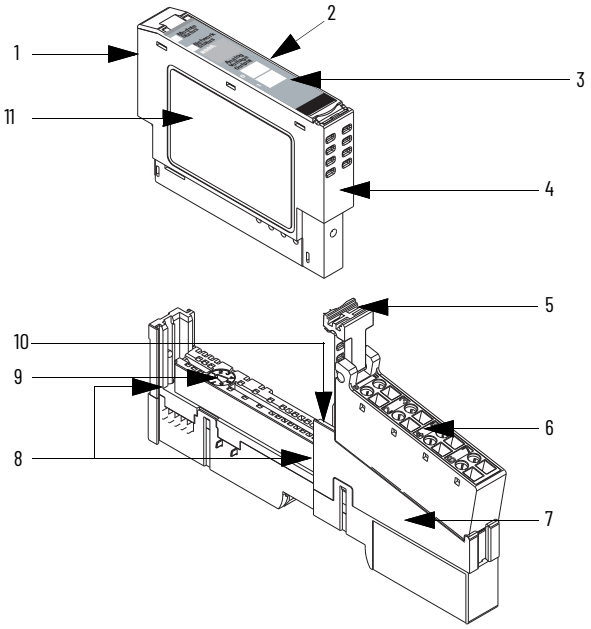

	Description		Description
1	Module locking mechanism	7	Mounting base
2	Module wiring diagram (behind)	8	Interlocking side pieces
3	Slide-in writable label	9	Mechanical keying (orange)
4	Insertable I/O module	10	DIN rail locking screw (orange)
5	RTB handle	11	Product information label
6	RTB with screw (1734-RTB) or spring clamp (1734-RTBS)		

POINT I/O Module with 1734-TOP, 1734-TOPS, 1734-TOP3, or 1734-TOP3S One-piece Terminal Base

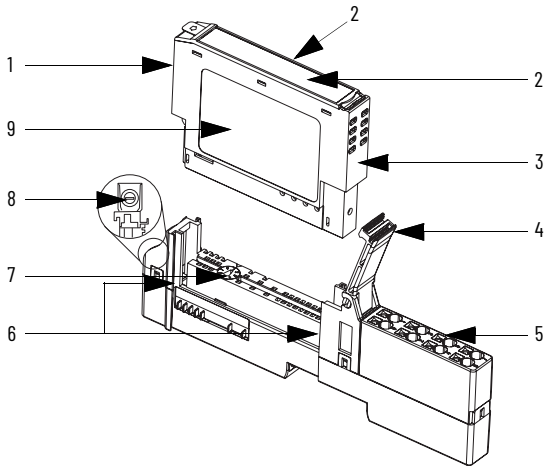

	Description		Description
1	Module locking mechanism	6	One-piece terminal base with screw or spring clamp
2	Module wiring diagram (behind)	7	Interlocking side pieces
3	Slide-in writable label	8	Mechanical keying (orange)
4	Insertable I/O module	9	DIN rail locking screw (orange)
5	Terminal base handle	10	Product information label

Install the Mounting Base

To install the mounting base on the DIN rail (Allen-Bradley® part number 199-DR1; 46277-3; EN50022), proceed as follows:

ATTENTION: This product is grounded through the DIN rail to chassis ground. Use zinc-plated chromate-passivated steel DIN rail to assure proper grounding. The use of other DIN rail materials (for example, aluminum or plastic) that can corrode, oxidize, or are poor conductors, can result in improper or intermittent grounding. Secure DIN rail to mounting surface approximately every 200 mm (7.8 in.) and use end-anchors appropriately. Be sure to ground the DIN rail properly. See Industrial Automation Wiring and Grounding Guidelines, publication 1770-4.1, for more information.

WARNING: When used in a Class I Division 2, hazardous location, this equipment must be mounted in a suitable enclosure with proper wiring method that complies with the governing electrical codes.

1. Position the mounting base vertically above the installed units (adapter, power supply, or existing module).

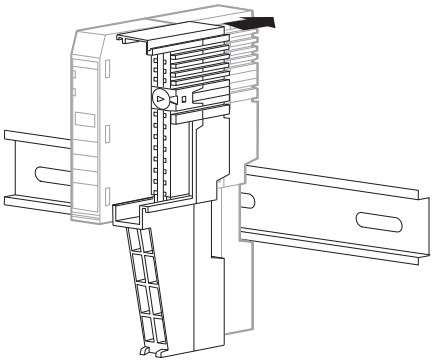

2. Slide the mounting base down allowing the interlocking side pieces to engage the adjacent module or adapter.
3. Press firmly to seat the mounting base on the DIN rail. The mounting base snaps into place.
   Be sure that the orange DIN rail locking screw is in the horizontal position and that it has engaged the DIN rail.

ATTENTION: Use the end cap from your adapter or interface module to cover the exposed interconnections on the last mounting base on the DIN rail. Failure to do so could result in equipment damage or injury from electric shock.

Install the I/O Module

The module can be installed before or after base installation. Make sure that the mounting base is correctly keyed before installing the module into the mounting base. In addition, make sure that the mounting base locking screw is positioned horizontal referenced to the base.

WARNING: When you insert or remove the module while backplane power is on, an electric arc can occur. This could cause an explosion in hazardous location installations. Be sure that power is removed or the area is nonhazardous before proceeding. Repeated electrical arcing causes excessive wear to contacts on both the module and its mating connector. Worn contacts may create electrical resistance that can affect module operation.

POINT I/O Terminal Bases

1734-TB Base

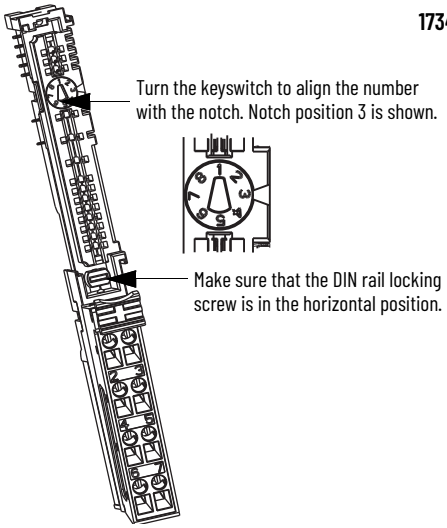

1734-TOP Base

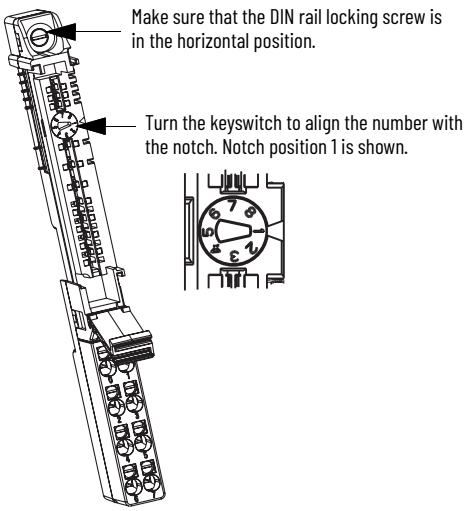

To install the module, proceed as follows.

1. Use a bladed screwdriver to rotate the keyswitch on the mounting base clockwise until the number required for the type of module you are installing aligns with the notch in the base.
2. Verify that the DIN rail locking screw is in the horizontal position. You cannot insert the module if the locking mechanism is unlocked.
3. Insert the module straight down into the mounting base and press to secure. The module locks into place.

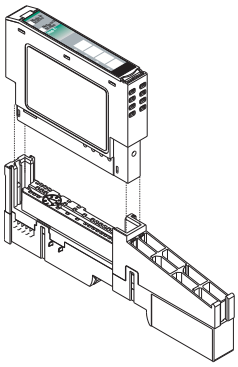

Install the Removable Terminal Block

An RTB is supplied with your wiring base assembly. To remove, pull up on the RTB handle. This allows the mounting base to be removed and replaced as necessary without removing any of the wiring. To reinsert the Removable Terminal Block, proceed as follows.

WARNING: When you connect or disconnect the RTB with field-side power applied, an electric arc can occur. This can cause an explosion in hazardous location installations.
Be sure that power is removed or the area is nonhazardous before proceeding.

1. Insert the end opposite the handle into the base unit.
   This end has a curved section that engages with the wiring base.
2. Rotate the terminal block into the wiring base until it locks itself in place.
3. If an I/O module is installed, snap the RTB handle into place on the module.

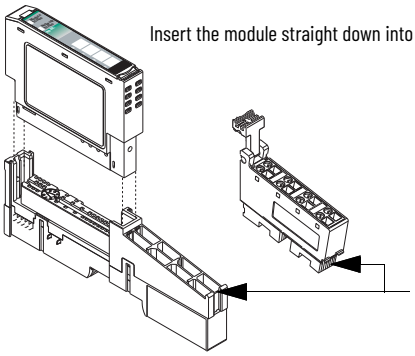

WARNING: For 1734-RTBS and 1734-RTB3S, to latch and unlatch the wire, insert a bladed screwdriver (catalog number 1492-N90 – 3 mm [0.12 in.] diameter blade) into the opening at approximately 73° (blade surface is parallel with top surface of the opening) and push up gently.

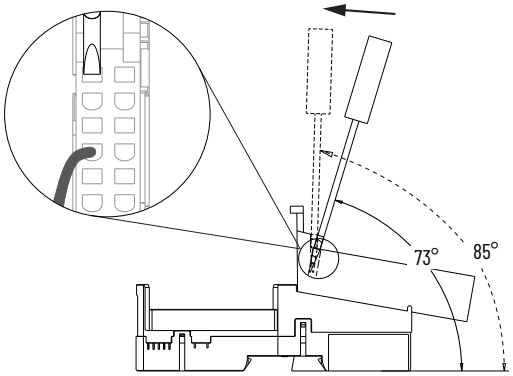

WARNING: For 1734-TOPS and 1734-TOP3S, to latch and unlatch the wire, insert a bladed screwdriver (catalog number 1492-N90 – 3 mm [0.12 in.] diameter blade) into the opening at approximately 97° (blade surface is parallel with the top surface of the opening) and press in (do not push up or down).

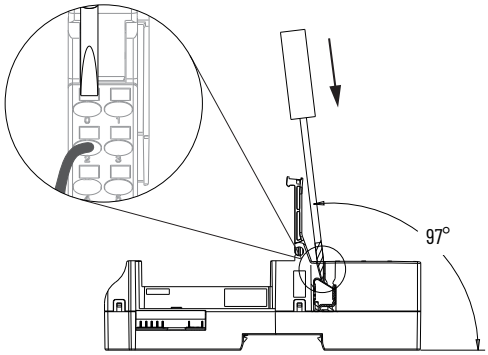

Remove the Mounting Base

To remove a mounting base, you must remove any installed module and the module that is installed in the base to the right. Remove the removable terminal block, if wired.

WARNING: When you insert or remove the module while backplane power is on, an electric arc can occur. This could cause an explosion in hazardous location installations.
Be sure that power is removed or the area is nonhazardous before proceeding. Repeated electrical arcing causes excessive wear to contacts on both the module and its mating connector. Worn contacts may create electrical resistance that can affect module operation.

WARNING: When you connect or disconnect the Removable Terminal Block (RTB) with field side power applied, an electric arc can occur. This could cause an explosion in hazardous location installations.
Be sure that power is removed or the area is nonhazardous before proceeding.

1. Unlatch the RTB handle on the I/O module.
2. Pull on the RTB handle to remove the removable terminal block.
3. Press the module lock on the top of the module.
4. Pull on the I/O module to remove from the base.
5. Repeat steps 1, 2, 3, and 4 for the module to the right.
6. Use a small-bladed screwdriver to rotate the orange base locking screw to a vertical position.
   This releases the locking mechanism.
7. Lift straight up to remove.

Wire the Module

To wire the module, see the following diagrams and tables.

WARNING: If you connect or disconnect the wiring while the field-side power is on, an electric arc can occur. This could cause an explosion in hazardous location installations. Be sure that power is removed or the area is nonhazardous before proceeding.

POINT I/O 2 Current and 2 Voltage Output Analog Modules

1734-IE2C, 1734-IE2CK

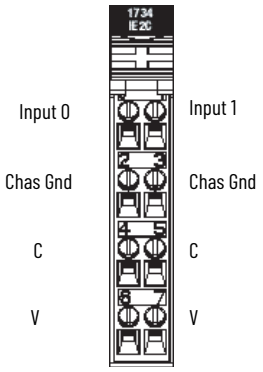

1734-IE2V, 1734-IE2VK

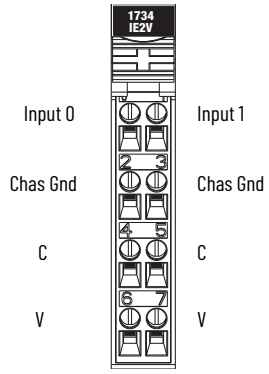

Chas Gnd = Chassis ground
C = Common
V = Supply

Figure 1 - POINT I/O 2 Current Input Analog Module Wiring – 1734-IE2C, 1734-IE2CK

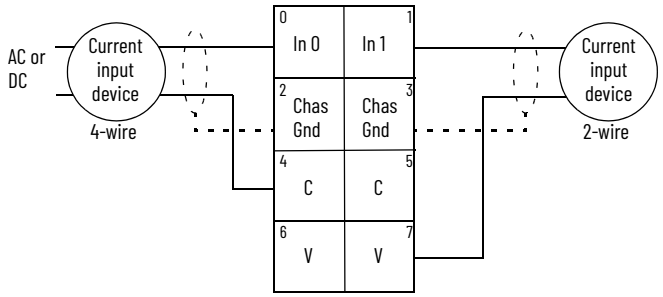

In = Input channel
Chas Gnd = Chassis ground
C = Common
V = 12/24V DC supply
Note: Not protected, 0.3 A max

Channel	Current Input	Chassis Ground	Common	Supply
0	0	2	4	6
1	1	3	5	7
12/24V DC is provided by the internal field power bus.				

Figure 2 - POINT I/O 2 Voltage Input Analog Module Wiring – 1734-IE2V, 1734-IE2VK

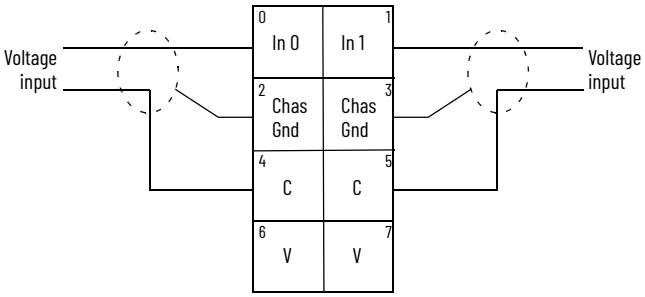

In = Input channel
Chas Gnd = Chassis ground
C = Common
V = 12/24V DC supply
Note: Not protected, 0.3 A max

Channel	Voltage Input	Chassis Ground	Common	Supply
0	0	2	4	6
1	1	3	5	7
12/24V DC is provided by the internal field power bus.				

ATTENTION: This product is grounded through the DIN rail to chassis ground. Use zinc-plated chromate-passivated steel DIN rail to assure proper grounding. The use of other DIN rail materials (for example, aluminum or plastic) that can corrode, oxidize, or are poor conductors, can result in improper or intermittent grounding. Secure DIN rail to the mounting surface approximately every 200 mm (7.8 in.) and use end-anchors appropriately. Be sure to ground the DIN rail properly. See Industrial Automation Wiring and Grounding Guidelines, publication 1770-4.1, for more information.

Communicate with Your Module

POINT I/O modules send (produce) and receive (consume) I/O data (messages). You map this data onto the processor memory.

These modules produce 6 bytes of input data (scanner Rx) and fault status data. These modules do not consume I/O data (scanner Tx).

Default Data Map

Message size: 6 Bytes

	15	14	13	12	11	10	09	08	07	06	05	04	03	02	01	00
Produces (scanner Rx)	Input channel 0 – High byte								Input channel 0 – Low byte							
	Input channel 1 – High byte								Input channel 1 – Low byte							
	Status byte for channel 1								Status byte for channel 0							
	OR	UR	HHA	LLA	HA	LA	CM	CF	OR	UR	HHA	LLA	HA	LA	CM	CF
Consumes (scanner Tx)	No consumed data															

Where:
OR = Overrange; 0 = No error, 1 = Fault
UR = Underrange; 0 = No error, 1 = Fault
HHA = High/High Alarm; 0 = No error, 1 = Fault
LLA = Low/Low Alarm; 0 = No error, 1 = Fault
HA = High Alarm; 0 = No error, 1 = Fault
LA = Low Alarm; 0 = No error, 1 = Fault
CM = Calibration Mode; 0 = Normal, 1 = Calibration mode
CF = Channel Fault Status; 0 = No error, 1 = Fault

Interpret Status Indicators

The following diagram and table show information on how to interpret the status indicators.

1734-IE2C, 1734-IE2CK

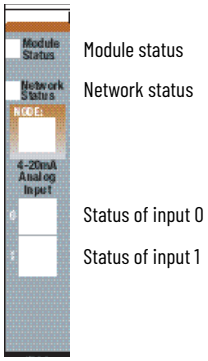

1734-IE2V, 1734-IE2VK

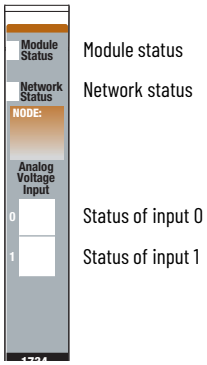

Indicator Status for Modules

Indicator	Status	Description
Module status	Off	No power is applied to the device.
	Green	The device is operating normally.
	Flashing green	The device needs commissioning due to missing, incomplete, or incorrect configuration.
	Flashing red	A recoverable fault is present.
	Red	Unrecoverable fault has occurred. Self-test failure is present (checksum failure, or ram test failure at cycle power). A firmware fatal error is present.
	Flashing red/green	The device is in self-test mode.
Network status	Off	The device is not online: • The device has not completed the dup_MAC-id test. • The device is not powered – Check the module status indicator.
	Flashing green	The device is online but has no connections in the established state.
	Green	The device is online and has connections in the established state.
	Flashing red	One or more I/O connections are in a timed-out state.
	Red	Critical link failure – Failed communication device. The device has detected an error that prevents it from communicating on the network.
	Flashing red/green	Communication faulted device – The device has detected a network access error and is in communication faulted state. The device has received and accepted an Identity Communication Faulted Request – Long protocol message.

Indicator Status for Modules (Continued)

Indicator	Status	Description
Channel status	Off	The device is in CAL mode.
	Steady green	Normal operation is present with channel scanning inputs.
	Flashing green	The channel is being calibrated.
	Steady red	A major channel fault is present.
	Flashing red	The channel is at the end of its range (0 mA or 21 mA) for 1734-IE2C, 1734-IE2CK. The channel is at the end of its range (over or under) for 1734-IE2V, 1734-IE2VK.

Specifications

Input Specifications

Attribute	1734-IE2C, 1734-IE2CK	1734-IE2V, 1734-IE2VK
Number of inputs	2 single-ended, non-isolated, current	2 single-ended, non-isolated, voltage
Resolution	16 bits – over 0...21 mA 0.32 µA/cnt	15 bits plus sign 320 µV/cnt in unipolar or bipolar mode
Input current	4...20 mA 0...20 mA	–
Input voltage	–	0...10V user configurable (-0.0V under, +0.5V over) ±10V user configurable (-0.5V under, +0.5V over)
Absolute accuracy(1)	0.1% Full Scale @ 25 °C (77 °F)	
Accuracy drift with temp	30 ppm/ °C	5 ppm/ °C
Input update rate (per module)	120 ms @ Notch = 50 Hz 100 ms @ Notch = 60 Hz (default) 24 ms @ Notch = 250 Hz 12 ms @ Notch = 500 Hz	
Input step response (per channel)	80 ms @ Notch = 50 Hz 70 ms @ Notch = 60 Hz (default) 16 ms @ Notch = 250 Hz 8 ms @ Notch = 500 Hz	
Digital filter time constant	0...10,000 ms (default = 0 ms)	
Input impedance	60 Ω	100 kΩ
Input resistance	60 Ω	200 kΩ
Conversion type	Delta Sigma	
Common mode rejection ratio	120 dB	
Normal mode rejection ratio	-60 dB	
Notch filter	-3 dB settable at the following: 13.1 Hz @ Notch = 50 Hz 15.7 Hz @ Notch = 60 Hz 65.5 Hz @ Notch = 250 Hz 131 Hz @ Notch = 580 Hz	
Data format	Signed integer	
Maximum overload	Fault protected to 28.8V DC	
Calibration	Factory-calibrated	

(1) Includes offset, gain, non-linearity, and repeatability error terms.

General Specifications

Attribute	1734-IE2C, 1734-IE2CK	1734-IE2V, 1734-IE2VK
Terminal base	1734-TB, 1734-TBS, 1734-TB3, 1734-TB3S, 1734-TOP, 1734-TOPS, 1734-TOP3, or 1734-TOP3S wiring base assembly	
Terminal base screw torque	0.6 N•m (7 lb•in)	
Indicators, logic side	1 green/red – Module status 1 green/red – Network status 2 green/red – Input status	
Keyswitch position	3	
POINTBus™ current, max	75 mA @ 5V DC	
Power dissipation, max	0.6 W @ 28.8V DC	0.75 W @ 28.8V DC
Thermal dissipation, max	2.0 BTU/hr @ 28.8V DC	2.5 BTU/hr @ 28.8V DC
Isolation voltage	50V continuous. No isolation between individual channels. Tested to withstand 2550V DC for 60 s.	50V continuous. No isolation between individual channels. Tested to withstand 2200V DC for 60 s.
External DC power Supply voltage, nom Voltage range Supply current	 24V DC 10...28.8V DC 10 mA @ 24V DC	 24V DC 10...28.8V DC 15 mA @ 24V DC
Dimensions (HxWxD), approx.	56.6 x 12.1 x 77.5 mm (2.23 x 0.48 x 3.05 in.)	
Weight, approx.	33 g (1.16 oz.)	
Wiring category(1) (2)	1 – on signal ports	
Wire size	0.25...2.5 mm^2 (22...14 AWG) solid or stranded shielded copper wire that is rated at 75 °C (167 °F) or greater 1.2 mm (3/64 in.) insulation max.	
Enclosure type rating	None (open-style)	
North American temp code	T5	T4A
UKEX/ATEX temp code	T4	
IECEx temp code	T4	

(1) Use this conductor category information for planning conductor routing as described in Industrial Automation Wiring and Grounding Guidelines, publication 1770-4.1.
(2) Use this Conductor Category information for planning conductor routing as described in the appropriate System Level Installation Manual.

Environmental Specifications

Attribute	Value
Temperature, operating	IEC 60068-2-1 (Test Ad, Operating Cold), IEC 60068-2-2 (Test Bd, Operating Dry Heat), IEC 60068-2-14 (Test Nb, Operating Thermal Shock): -20 °C ≤ Ta ≤ +55 °C (-4 °F ≤ Ta ≤ +131 °F)
Temperature, surrounding air, max	55 °C (131 °F)
Temperature, nonoperating	IEC 60068-2-1 (Test Ab, Unpackaged Nonoperating Cold), IEC 60068-2-2 (Test Bb, Unpackaged Nonoperating Dry Heat), IEC 60068-2-14 (Test Na, Unpackaged Nonoperating Thermal Shock): -40...+85 °C (-40...+185 °F)
Relative humidity	IEC 60068-2-30 (Test Db, Unpackaged Damp Heat): 5...95% noncondensing
Vibration	IEC60068-2-6 (Test Fc, Operating): 5 g (0.18 oz) @ 10...500 Hz
Shock, operating	EC 60068-2-27 (Test Ea, Unpackaged Shock): 30 g (1 oz)
Shock, nonoperating	EC 60068-2-27 (Test Ea, Unpackaged Shock): 50 g (1.8 oz)
Emissions	IEC 61000-6-4
ESD immunity	IEC6100-4-2: 6 kV contact discharges 8 kV air discharges
Radiated RF immunity	IEC 61000-4-3: 10V/m with 1 kHz sine wave 80% AM from 80...6000 MHz
EFT/B immunity	IEC 61000-4-4: ±3 kV at 5 kHz on signal ports
Surge transient immunity	IEC 61000-4-5: ±2 kV line-earth (CM) on shielded ports
Conducted RF immunity	IEC61000-4-6: 10V rms with 1 kHz sine wave 80% AM from 150 kHz...80 MHz

Certifications

Certification (when product is marked)[1]	Value
c-UL-us	UL Listed Industrial Control Equipment, certified for US and Canada. See UL File E65584. UL Listed for Class I Division 2 Group A,B,C,D Hazardous Locations, certified for U.S. and Canada. See UL File E194810.
UK and CE	UK Statutory Instrument 2016 No. 1091 and European Union 2014/30/EU EMC Directive, compliant with: EN 61326-1; Measurement/Control/Laboratory use, Industrial requirements EN 61000-6-2; Industrial Immunity EN 61000-6-4; Industrial Emissions EN 61131-2; Programmable Controllers (Clause 8, Zone A & B) UK Statutory Instrument 2016 No. 1101 and European Union 2014/35/EU LVD, compliant with: EN 61131-2; Programmable Controllers (Clause 11) UK Statutory Instrument 2012 No. 3032 and European Union 2011/65/EU RoHS, compliant with: EN IEC 63000; Technical documentation
Ex	UK Statutory Instrument 2016 No. 1107 and European Union 2014/34/EU ATEX Directive, compliant with: EN IEC 60079-0; General Requirements EN IEC 60079-7; Explosive Atmospheres, Protection "e" II 3 G Ex ec IIC T4 Gc DEMKO 04 ATEX 0330347X UL22UKEX2478X
RCM	Australian Radiocommunications Act, compliant with: EN 61000-6-4; Industrial Emissions
IECEx	IECEx System, compliant with IEC 60079-0; General Requirements IEC 60079-7; Explosive Atmospheres, Protection "e" II 3 G Ex ec IIC T4 Gc IECEx UL 20.0072X
KC	Korean Registration of Broadcasting and Communications Equipment, compliant with: Article 58-2 of Radio Waves Act, Clause 3
Morocco	Arrêté ministériel n° 6404-15 du 1 er muharram 1437 Arrêté ministériel n° 6404-15 du 29 ramadan 1436
CCC	CNCA-C23-01 强制性产品认证实施规则 防爆电气 CNCA-C23-01 CCC Implementation Rule Explosion-Proof Electrical Products CCC: 2020122309111607

(1) See the Product Certification link at rok.auto/certifications for Declaration of Conformity, Certificates, and other certification details.

Additional Resources

For more information on the products that are described in this publication, use these resources. You can view or download publications at rok.auto/literature.

Resource	Description
POINT I/O Modules Selection Guide, publication 1734-SG001	Provides POINT I/O adapters and module specifications.
POINT I/O Digital and Analog Modules and POINTBlock I/O Modules User Manual, publication 1734-UM001	Provides a detailed description of module functionality, configuration, and usage for POINT I/O digital and analog modules and POINTBlock I/O modules.
Industrial Automation Wiring and Grounding Guidelines, publication 1770-4.1	Provides general guidelines for installing a Rockwell Automation industrial system.
Product Certifications website, rok.auto/certifications	Provides declarations of conformity, certificates, and other certification details.

Rockwell Automation Support

Use these resources to access support information.

Technical Support Center	Find help with how-to videos, FAQs, chat, user forums, Knowledgebase, and product notification updates.	rok.auto/support
Local Technical Support Phone Numbers	Locate the telephone number for your country.	rok.auto/phonesupport
Technical Documentation Center	Quickly access and download technical specifications, installation instructions, and user manuals.	rok.auto/techdocs
Literature Library	Find installation instructions, manuals, brochures, and technical data publications.	rok.auto/literature
Product Compatibility and Download Center (PCDC)	Download firmware, associated files (such as AOP, EDS, and DTM), and access product release notes.	rok.auto/pcdc

Documentation Feedback

Your comments help us serve your documentation needs better. If you have any suggestions on how to improve our content, complete the form at rok.auto/docfeedback.

Waste Electrical and Electronic Equipment (WEEE)

At the end of life, this equipment should be collected separately from any unsorted municipal waste.

Rockwell Automation maintains current product environmental compliance information on its website at rok.auto/pec.

Rockwell Otomasyon Ticaret A.Ş. Kar Plaza İş Merkezi E Blok Kat:6 34752 İçerenköy, İstanbul, Tel: +90 (216) 5698400 EEE Yönetmeliğine Uygundur

Connect with us.

rockwellautomation.com — expanding **human possibility**®

AMERICAS: Rockwell Automation, 1201 South Second Street, Milwaukee, WI 53204-2496 USA, Tel: (1) 414.382.2000
EUROPE/MIDDLE EAST/AFRICA: Rockwell Automation NV, Pegasus Park, De Kleetlaan 12a, 1831 Diegem, Belgium, Tel: (32) 2663 0600
ASIA PACIFIC: Rockwell Automation SEA Pte Ltd, 2 Corporation Road, #04-05, Main Lobby, Corporation Place, Singapore 618494, Tel: (65) 6510 6608
UNITED KINGDOM: Rockwell Automation Ltd., Pitfield, Kiln Farm, Milton Keynes, MK11 3DR, United Kingdom, Tel: (44)(1908) 838-800

Allen-Bradley, expanding human possibility, FactoryTalk, POINT I/O, POINTBus, Rockwell Automation, Studio 5000 Logix Designer, and TechConnect are trademarks of Rockwell Automation, Inc.

ControlNet, DeviceNet, and EtherNet/IP are trademarks of ODVA, Inc.

Trademarks not belonging to Rockwell Automation are property of their respective companies.

Publication 1734-IN027H-EN-E - August 2026 | Supersedes Publication 1734-IN027G-EN-E - October 2025
Copyright © 2026 Rockwell Automation, Inc. All rights reserved.