Technical Data
4. Generation
Stainless Steel Actuators

AIR TORQUE
PNEUMATISCHE STELLANTRIEBE

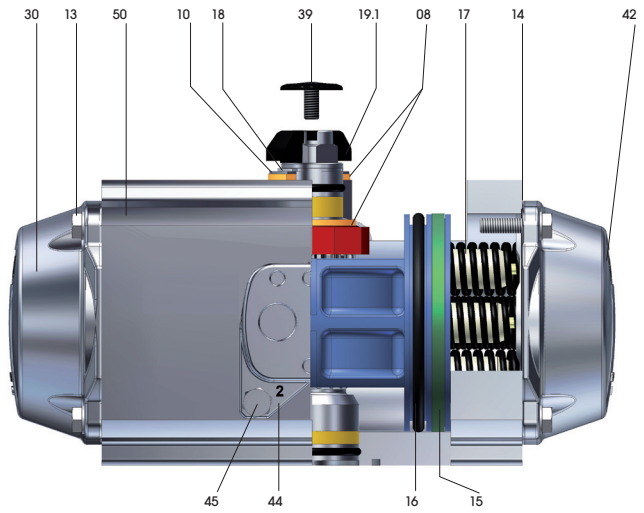

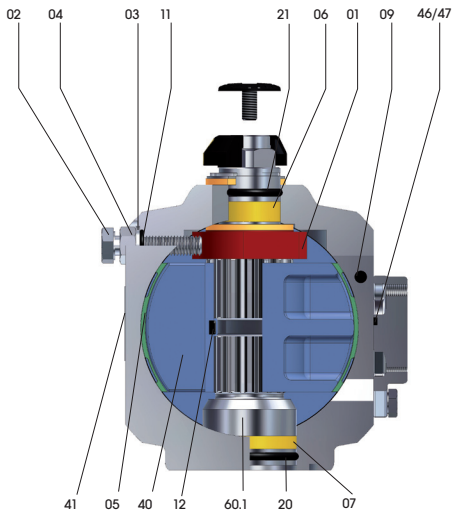

Only for model DRSC00450S and bigger

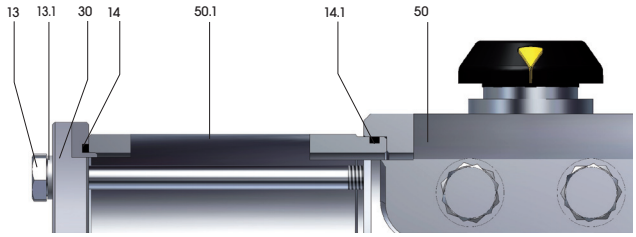

Only for model DRSC00015U@S

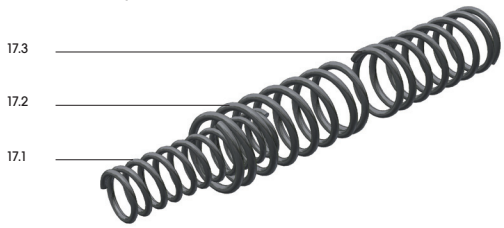

PART N°	Spare Parts	UNIT Q.TY / NOTE		PART DESCRIPTION	STANDARD MATERIAL
01		1		OCTI-CAM (Stop arrangement)	Stainless Steel (only for DRSC00015S ÷ DRSC00150S) Carbon Steel, zinc coated
02		2		STOP CAP SCREW	Stainless Steel A2 70 (ISO 3506) / OPTIONAL Stainless Steel A4 70
03		2		WASHER	Stainless Steel A2 (ISO 3506) / OPTIONAL Stainless Steel A4
04		2		NUT (Stop screw)	Stainless Steel A2 70 (ISO 3506) / OPTIONAL Stainless Steel A4 70
05	○	2		BEARING (Piston back)	High-grade polymers
06	○	1		BEARING (Pinion top)	High-grade polymers
07	○	1		BEARING (Pinion bottom)	High-grade polymers
08	○	2		THRUST BEARING (Pinion)	High-grade polymers
09	○ □	2	NA for DRSC00450S and bigger	PLUG	M-NBR / Silicone
10		1		THRUST WASHER (Pinion)	Stainless Steel AISI 304
11	○ □	2		"O" RING (Stop screw)	M-NBR
12		2		PISTON GUIDE	High-grade polymers
13		8		CAP SCREW (End cap)	Stainless Steel A4 70 (ISO 3506)
13.1		8	only for DRSC00450S and bigger	WASHER (Cap Screw end cap)	Stainless Steel A4 (ISO 3506)
14	○ □	2		"O" RING (End cap)	M-NBR
14.1	○ □	2	only for DRSC00450S and bigger	"O" RING (Body Extensions)	M-NBR
15	○	2		BEARING (Piston head)	High-grade polymers
16	○ □	2		"O" RING (Piston)	M-NBR
17		max. 12	for DRSC00030S ÷ DRSC02000S	SPRING (Cartridge)	SiCr Spring alloy Steel coated
17.1		max. 4	only for DRSC00015S	SPRING	
17.2				SPRING	
17.3				SPRING	
18		1		SPRING CLIP (Pinion)	Stainless Steel AISI 302
19.1		1		POSITION INDICATOR	High-grade polymers
20	○ □	1		"O" RING (Pinion bottom)	M-NBR
21	○ □	1		"O" RING (Pinion top)	M-NBR
30		2	for DRSC00015S ÷ DRSC00300S for DRSC00450S and bigger	END CAP	Stainless Steel 1.4408 (EN 10283) / CF8M (ASTM A351), ENP Stainless Steel 1.4401 (EN 10088-3) / F316 (ASTM A 182), ENP
39		1		CAP SCREW (Indicator)	High-grade polymers
40		2		PISTON	Pressure Die Cast Aluminium alloy, anodized
41		1		ACTUATOR IDENTIFICATION LABEL	Polyester-Silver
42		2		END CAP LABEL	Polyester-Silver
44		1		NAMUR CONNECTION PLATE	Stainless Steel 1.4401 (EN 10088-3) / F316 (ASTM A 182) -only for DRSC00015S Stainless Steel 1.4408 (EN 10283) / CF8M (ASTM A351)
45		2		CAP SCREW (Connection Plate)	Stainless Steel A4 70 (ISO 3506)
46	○ □	1		"O" RING Port 2 (Connection Plate)	M-NBR
47	○ □	1		"O" RING Port 4 (Connection Plate)	M-NBR
50		1		BODY	Stainless Steel 1.4401 (EN 10088-3) / F316 (ASTM A 182), ENP
50.1		2	only for DRSC00450S and bigger	BODY EXTENSIONS	Stainless Steel 1.4401 (EN 10088-3) / F316 (ASTM A 182), ENP
60.1		1		INTEGRAL DRIVE SHAFT	Stainless Steel 1.4401 (EN 10088-3) / F316 (ASTM A 182), ENP

○ Parts included in Complete spare parts kit
□ Parts included in "O" ring spare parts kit

Air Torque GmbH
Im Katzentach 16-18 · DE - 76275 Ettlingen
Tel.: +49 (0)7243 59 34-0 · Fax : +49 (0)7243 59 34-34
info@airtorque.de · www.airtorque.de

Modifications reserved. Date 05.2011
No guarantee for accuracy.
Older data sheets are invalid.

Technical Data
4. Generation
Stainless Steel Actuators

AIR TORQUE
PNEUMATISCHE STELLANTRIEBE

FRONT VIEW

DRSC00015S-DRSC00300S

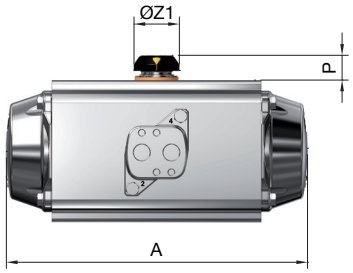

SIDE VIEW

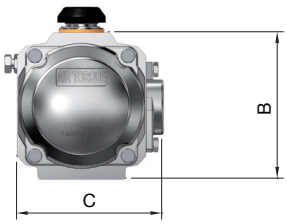

TOP DETAIL

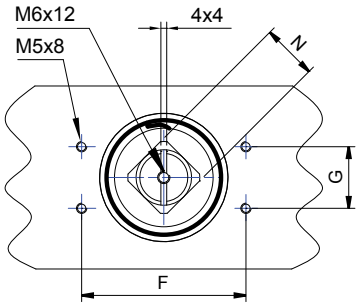

DRSC00450S-DRSC02000S

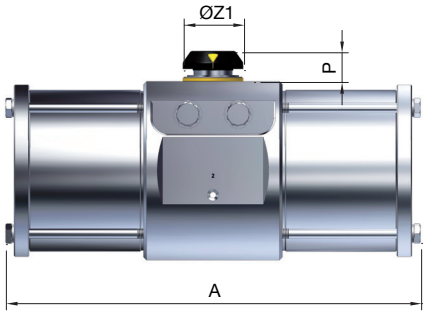

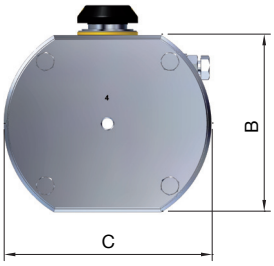

AIR CONNECTION VDI/VDE 3845

DRSC00015S-DRSC00300S

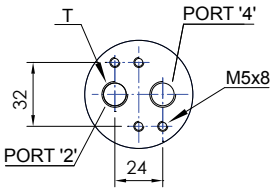

DRSC00450S-DRSC02000S

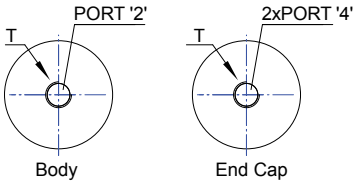

ACTUATOR MODEL	DRSC 00015S	DRSC 00030S	DRSC 00060S	DRSC 00100S	DRSC 00150S	DRSC 00300S	DRSC 00450S	DRSC 00900S	DRSC 02000S
A	141	159	211	248	268	345	412	492	630
B	69	85	102	115	127	157	177	220,5	298,5
C (Approx.)	75	86	99	114	128	159	210	250	335
F	80	80	80	80	80	80	80	130	130
G	30	30	30	30	30	30	30	30	30
N	11	11	17	17	17	27	27	36	36
P	20	20	20	20	20	30	30	50	50
T ISO 228*	1/8”	1/4”	1/4”	1/4”	1/4”	1/4”	1/4”	1/4”	3/8”
øZ1	37	37	37	37	37	51	60	68	104
ISO Flange	F04	F05	F05 + F07	F05 + F07	F07 + F10	F07 + F10	F10 + F12	F14	F16
Q	42	50	50	50	70	70	102	140	165
Q1	-	-	70	70	102	102	125	-	-
W	M5	M6	M6	M6	M8	M8	M10	M16	M20
W1	-	-	M8	M8	M10	M10	M12	-	-

OPTIONAL ISO Flange		F03	-	-	-	-	-	-	F10 + F12	-
CH x l min.	DS	9x11	11x12	14x16	17x19	17x19	22x24	27x29	27x29	36x39
		11x12	14x16	17x19	-	22x24	27x29	-	36x39	46x49

*NPT (ANSI B1-20-1) threads available on request only for models DRSC00015S ÷ DRSC00300S

BOTTOM VIEW ISO 5211

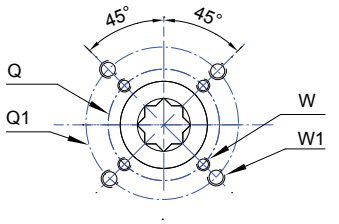

METRIC	MODEL TYPE	00015S DR	00015S SC	00030S DR	00030S SC	00060S DR	00060S SC	00100S DR	00100S SC	00150S DR	00150S SC	00300S DR	00300S SC	00450S DR	00450S SC	00900S DR	00900S SC	02000S DR	02000S SC
Opening Time (A)	(Sec.)	0,2	0,25	0,25	0,3	0,3	0,4	0,4	0,5	0,5	0,7	0,9	1,2	1,2	1,5	2	2,4	3,5	4,1
Closing Time (A)	(Sec.)	0,2	0,3	0,3	0,35	0,35	0,5	0,5	0,6	0,6	0,9	1,1	1,4	1,4	1,8	2,2	2,8	4	4,6
Air Volume Opening	(L)	0,09		0,16		0,31		0,51		0,71		1,54		2,41		4,26		10	
Air Volume Closing	(L)	0,15		0,26		0,49		0,78		1,11		2,34		3,78		6,89		15,2	
Approximate Weight	(Kg)	2,7	2,9	3,8	4,0	6,0	6,4	8,8	9,4	12,3	13,3	22,6	24,5	34,6	37,7	58	65	135	150

DOUBLE SQUARE (STD) | SINGLE SQUARE PARALLEL | SINGLE SQUARE DIAGONAL

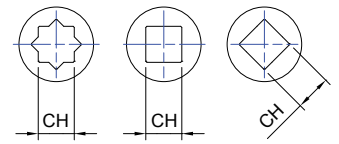

Note: (A) The above moving times of the actuator are obtained in the following test conditions:
For model DRSC00015S ÷ DRSC00450S: (1) Room Temperature, (2) Actuator Stroke 90°, (3) Solenoid Valve with Orifice Of 4 mm and a flow capacity Qn 400L/min., (4) Inside pipe diameter 8 mm, (5) Medium clean air, (6) Air supply pressure 5,5 bar (79,75 Psi), (7) Actuator without external resistance load.

For model DRSC00900S ÷ DRSC02000S: (1) Room Temperature, (2) Actuator Stroke 90° , (3) Solenoid Valve with Orifice Of 11 mm and a flow capacity Qn 6000L/min., (4) Inside pipe diameter 11 mm, (5) Medium clean air, (6) Air supply pressure 5,5 bar (79,75 Psi), (7) Actuator without external resistance load.

Cautions: obviously on the field applications when one or more of the above parameter are different, the moving time will be different.

Air Torque GmbH
Im Katzentach 16-18 · DE - 76275 Ettlingen
Tel.: +49 (0)7243 59 34-0 · Fax : +49 (0)7243 59 34-34
info@airtorque.de · www.airtorque.de

Modifications reserved. Date 05.2011
No guarantee for accuracy.
Older data sheets are invalid.