Technical catalogue - Preliminary

SACE Tmax XT

New low voltage moulded-case circuit-breakers up to 250 A

Power and productivity
for a better world™

Construction Characteristics 1

The SACE Tmax XT Ranges 2

Accessories 3

Characteristic Curves and Technical Information 4

Overall dimensions 5

Wiring Diagrams 6

Ordering codes 7

Glossary 8

New SACE Tmax XT.
Simply XTraordinary.

ABB SACE is proud to present you the result of a long and intense research and development project: the new SACE Tmax XT up to 250A - ABB SACE's new family of moulded-case circuit-breakers.

Today a highly advanced range of circuit-breakers has been brought out, with unparalleled versatility of use and able to solve all installation problems brilliantly.
You can find the new SACE Tmax XT in the three-pole and four-pole, fixed, plug-in and withdrawable versions, fitted with the very latest generation thermomagnetic and electronic trip units, with the possibility of interchangeability. The new SACE Tmax XT set up a new technological standard and leave you free to think up and build installations with extraordinary performances. An extraordinary demonstration of ABB SACE's innovation capability.
Extraordinary latest generation electronics. Extraordinary coverage of all plant requirements. Extraordinary performances in compact dimensions.
Extraordinary simplicity of installation and putting into service.
Extraordinary range of accessories available.

New SACE Tmax XT. Simply XTraordinary.

New SACE Tmax XT.
XTraordinary completeness of range.

Here are the 4 new SACE Tmax XT frames for you:
- the small XT1 up to 160A;
- the high-performing XT2 up to 160A;
- the reliable XT3 up to 250A;
- the powerful XT4 up to 250A.

The new SACE Tmax XT go everywhere and fear no tests as they are made to respond successfully to all plant engineering requirements, from the standard ones to the most technologically advanced ones, thanks to the extraordinary fullness of their range. A complete offer up to 250A for distribution, for motor protection, for generator protection, for oversized neutral, as switch-disconnectors and for any other needs. A new range of both thermomagnetic and electronic protection trip units, interchangeable right from the smallest frames. To say nothing of the new and large number of dedicated accessories available, even for special applications. All that remains is for you to choose: XT1 and XT3 for building standard installations with ABB SACE's unquestioned reliability and safety, whereas XT2 and XT4 for building technologically advanced installations with top of market performance. New SACE Tmax XT, for any choice, always and in any case simply extraordinary.
New SACE Tmax XT. XTreme protection.

New SACE Tmax XT.
XTraordinary advanced electronics.

Welcome a totally renewed, high-performing and versatile range of electronic trip units.
Ekip: this is the name of the new, very latest generation electronic trip units which equip the new frames of SACE Tmax XT2 and SACE Tmax XT4 circuit-breakers.

The trip units are interchangeable and guarantee absolute tripping reliability and precision. Apart from the continuous green LED, which indicates correct operation of the protection trip unit, all the Ekip trip units also have a LED to signal intervention of all the protection functions.
To allow the Ekip units to communicate and exchange information with the other devices, simply insert the Ekip Com module inside the circuit-breaker, leaving the space inside the electric panel free.

All the Ekip trip units can be fitted with a vast range of dedicated accessories. The main ones are:

- the Ekip Display, to be applied onto the front of the electronic trip unit for simpler setting and for better reading of information;
- the Ekip LED Meter, a device to be installed on the front of the trip unit to simplify current readings;
- the Ekip TT, the new trip test unit;
- the Ekip T&P, the extraordinary testing and programming unit.

Finally, for the first time ground fault protection G is also available on the 160A frame.
Ekip: isn't all this simply XTraordinary?
New SACE Tmax XT. XTended technology.

Construction Characteristics

Index

Construction characteristics **1**/2

Regulations and Reference Standards.....**1**/5

Identification of the SACE Tmax XT circuit-breakers.....**1**/6

Nomenclature of the trip units and residual current protection devices **1**/7

Construction characteristics

			XT1				
Size[G2.1]		[A]	160				
Poles		[No.]	3, 4				
Rated service voltage, **Ue**[G2.4]	(AC) 50-60Hz	[V]	690				
	(DC)	[V]	500				
Rated insulation voltage, **Ui**[G2.5]		[V]	800				
Rated impulse withstand voltage, **Uimp**[G2.6]		[kV]	8				
Versions			Fixed, Plug-in[2]				
Breaking capacities according to IEC 60947-2			**B**	**C**	**N**	**S**	**H**
Rated ultimate short-circuit breaking capacity, Icu[G2.7]							
Icu @ 220-230V 50-60Hz (AC)		[kA]	25	40	65	85	100
Icu @ 380V 50-60Hz (AC)		[kA]	18	25	36	50	70
Icu @ 415V 50-60Hz (AC)		[kA]	18	25	36	50	70
Icu @ 440V 50-60Hz (AC)		[kA]	15	25	36	50	65
Icu @ 500V 50-60Hz (AC)		[kA]	8	18	30	36	50
Icu @ 525V 50-60Hz (AC)		[kA]	6	8	22	35	35
Icu @ 690V 50-60Hz (AC)		[kA]	3	4	6	8	10
Icu @ 250V (DC) 2 poles in series		[kA]	18	25	36	50	70
Icu @ 500V (DC) 3 poles in series		[kA]	18	25	36	50	70
Rated service short-circuit breaking capacity, Ics[G2.8]							
Ics @ 220-230V 50-60Hz (AC)		[kA]	100%	100%	75% (50)	75%	75%
Ics @ 380V 50-60Hz (AC)		[kA]	100%	100%	100%	100%	75%
Ics @ 415V 50-60Hz (AC)		[kA]	100%	100%	100%	75%	50% (37.5)
Ics @ 440V 50-60Hz (AC)		[kA]	75%	50%	50%	50%	50%
Ics @ 500V 50-60Hz (AC)		[kA]	100%	50%	50%	50%	50%
Ics @ 525V 50-60Hz (AC)		[kA]	100%	100%	50%	50%	50%
Ics @ 690V 50-60Hz (AC)		[kA]	100%	100%	75%	50%	50%
Ics @ 250V (DC) 2 poles in series		[kA]	100%	100%	100%	75%	75%
Ics @ 500V (DC) 3 poles in series		[kA]	100%	100%	100%	75%	75%
Rated short-circuit making capacity, Icm[G2.10]							
Icm @ 220-230V 50-60Hz (AC)		[kA]	52.5	84	143	187	220
Icm @ 380V 50-60Hz (AC)		[kA]	36	52.5	75.6	105	154
Icm @ 415V 50-60Hz (AC)		[kA]	36	52.5	75.6	105	154
Icm @ 440V 50-60Hz (AC)		[kA]	30	52.5	75.6	105	143
Icm @ 500V 50-60Hz (AC)		[kA]	13.6	36	63	75,6	105
Icm @ 525V 50-60Hz (AC)		[kA]	9	13.6	46.2	73.5	73.5
Icm @ 690V 50-60Hz (AC)		[kA]	4.5	6	9	13.6	17
Breaking capacities according to NEMA-AB1							
@ 240V 50-60Hz (AC)		[kA]	25	40	65	85	100
@ 480V 50-60Hz (AC)		[kA]	8	18	30	36	65
Utilisation Category (IEC 60947-2)			A				
Reference Standard			IEC 60947-2				
Isolation behaviour			✔				
Mounted on DIN rail			DIN EN 50022				
Mechanical life[G2.14]		[No. Operations]	25000				
		[No. Hourly operations]	240				
Electrical life @ 415 V (AC)[G2.13]		[No. Operations]	8000				
		[No. Hourly operations]	120				
Dimensions - Fixed (Width x Depth x Height)	3 poles	[mm]	76.2 x 70 x 130				
	4 poles	[mm]	101.6 x 70 x 130				
Total opening time							
Circuit-breaker with shunt opening release		[ms]	15				
Circuit-breaker with undervoltage release		[ms]	15				
Trip units for power distribution							
TMD/TMA							
TMD			■				
Ekip LS/I							
Ekip I							
Ekip LSI							
Ekip LSIG							
Trip units for motor protection							
MF/MA							
Ekip M-I							
Ekip M-LIU							
Ekip M-LRIU							
Trip units for generator protection							
TMG							
Ekip G-LS/I							
Trip units for oversized Neutral Protection							
Ekip N-LS/I							
Interchangeable protection trip units							

(1) 90kA@690V only for XT4 160. Available shortly, please ask ABB SACE
(2) XT1 plug-in In max=125A

■ Complete circuit-breaker
▲ Loose trip unit

	XT2					XT3		XT4				
	160					250		160/250				
	3, 4					3, 4		3, 4				
	690					690		690				
	500					500		500				
	1000					800		1000				
	8					8		8				
	Fixed, Withdrawable, Plug-in					Fixed, Plug-in		Fixed, Withdrawable, Plug-in				
	N	S	H	L	V	N	S	N	S	H	L	V
	65	85	100	150	200	50	85	65	85	100	150	200
	36	50	70	120	200	36	50	36	50	70	120	150
	36	50	70	120	150	36	50	36	50	70	120	150
	36	50	65	100	150	25	40	36	50	65	100	150
	30	36	50	60	70	20	30	30	36	50	60	70
	20	25	30	36	50	13	20	20	25	45	50	50
	10	12	15	18	20	5	8	10	12	15	20	25 (90[1])
	36	50	70	120	150	36	50	36	50	70	120	150
	36	50	70	120	150	36	50	36	50	70	120	150
	100%	100%	100%	100%	100%	75%	50%	100%	100%	100%	100%	100%
	100%	100%	100%	100%	100%	75%	50% (27)	100%	100%	100%	100%	100%
	100%	100%	100%	100%	100%	75%	50% (27)	100%	100%	100%	100%	100%
	100%	100%	100%	100%	100%	75%	50%	100%	100%	100%	100%	100%
	100%	100%	100%	100%	100%	75%	50%	100%	100%	100%	100%	100%
	100%	100%	100%	100%	100%	75%	50%	100%	100%	100%	100%	100%
	100%	100%	100%	100%	75%	75%	50%	100%	100%	100%	100%	75% (20)
	100%	100%	100%	100%	100%	100%	75%	100%	100%	100%	100%	100%
	100%	100%	100%	100%	100%	100%	75%	100%	100%	100%	100%	100%
	143	187	220	330	440	143	187	143	187	220	330	440
	75.6	105	154	264	440	75.6	105	75.6	105	154	264	330
	75.6	105	154	264	330	75.6	105	75.6	105	154	264	330
	75.6	105	143	220	330	75.6	105	75.6	105	143	220	330
	63	75.6	105	132	220	63	75.6	63	75.6	105	132	220
	40	52.5	63	75.6	132	46.2	75.6	40	52.5	63	75.6	198
	17	24	30	36	40	9	13.6	13.6	22.5	30	40	52.5
	65	85	100	150	200	50	85	65	85	100	150	200
	30	36	65	100	150	25	35	30	36	65	100	150
	A					A		A				
	IEC 60947-2					IEC 60947-2		IEC 60947-2				
	✔					✔		✔				
	DIN EN 50022					DIN EN 50022		DIN EN 50022				
	25000					25000		25000				
	240					240		240				
	8000					8000		8000				
	120					120		120				
	90 x 82.5 x 130					105 x 70 x 150		105 x 82.5 x 160				
	120 x 82.5 x 130					140 x 70 x 150		140 x 82.5 x 160				
	15					15		15				
	15					15		15				
			■							■		
						■						
			■							■		
			■							■		
			■							■		
			■							■		
			■			■				■		
			■									
			▲							▲		
			▲							▲		
			■			■						
			▲							▲		
			▲							▲		
			✔							✔		

Construction characteristics

The references in round brackets (Gx.x) in the technical catalogue refer to the Glossary in the final charter of the technical catalogue.

Positive operation

All the moulded-case circuit-breakers in the SACE Tmax XT family are realized in accordance with the following construction characteristics:

- double insulation(G1.5);
- positive operation(G1.6);
- isolation behaviour(G1.7);
- electromagnetic compatibility(G1.8);
- tropicalization(G1.9);
- impact and vibration resistance(G1.10);
- power supply from the top towards the bottom or vice versa;
- versatility of the installation. It is possible to mount the circuit-breaker in horizontal, vertical, or lying down position without any derating of the rated characteristics;
- no nominal performance derating for use up to an altitude of 2000m. Above 2000m, the properties of the atmosphere (composition of the air, dielectric strength, cooling power and pressure) change, having an impact on the main parameters which define the circuit-breaker. The table below gives the changes to the main performance parameters;

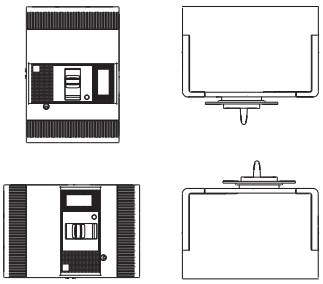

Installation positions

Altitude		2000m	3000m	4000m	5000m
Rated employ voltage, Ue	[V]	690	600	540	470
Rated uninterrupted current	%	100	98	93	90

- the SACE Tmax XT circuit-breakers can be used in environments where the temperature is between -25°C and +70°C and stored in environments where the temperature is between -40°C and +70°C. To use temperatures other than 40°C, see the “Temperature Performances” paragraph of the Characteristic Curves and the technical information chapter;
- different degrees of protection IP (International Protection)(G 1.11);

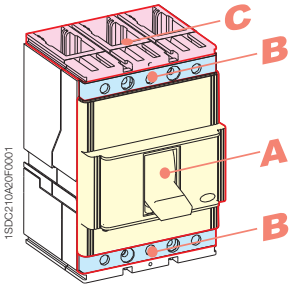

Protection degrees

Circuit-breaker	With front	Without front(1)	With Front for lever -FLD-	With rotary Handles	With transmitted rotary handle and accessory IP54	With high terminal covers HTC	With low terminal covers LTC
A	IP40	IP20	IP40	IP40	IP54	IP40	IP40
B	IP20	IP20	IP20	IP20	IP20	IP40	IP40
C	NC	NC	NC	NC	NC	IP40	IP30

(1) During the installation of electrical accessories
NC Not classifiable

Accessories	Motor operator MOD, MOE or MOE-E	Residual current devices	Residual current from switchboard RCQ020	Automatic Transfer Switch ATS021 and ATS022
On Front	IP30	IP40	IP41	IP40

Test pushbutton

- all the circuit-breakers in the XT family are fitted with a test pushbutton which allows the release test to be done. This test must be carried out with the circuit-breaker closed.

Regulations and Reference Standards

Hologram

Conformity with Standards

The SACE Tmax XT circuit-breakers and their accessories are constructed in conformity with:

- Standard[G6.1]:
  - IEC 60947-2;
- Directives[G6.2]:
  - EC “Low Voltage Directive” (LVD) N° 2006/95/EC (in replacement of 73/23/EEC and subsequent amendments);
  - EC “Electromagnetic Compatibility Directive” (EMC) 2004/108/CE;
- Naval Registers[G6.3] (ask ABB SACE for the versions available):
  - Lloyd’s Register of Shipping, Germanischer Lloyd, Bureau Veritas, Rina, Det Norske Veritas, Russian Maritime Register of Shipping, ABS.

Naval Registers

Certification of conformity with the product Standards is carried out in the ABB SACE tests laboratory (accredited by SINAL) in respect of the EN 45011 European Standard, by the Italian certification body ACAE (Association for Certification of Electrical Apparatus), member of the European LOVAG organisation (Low Voltage Agreement Group) and by the Swedish certification body SEMKO belonging to the international IECEE organisation.

The SACE Tmax XT series has a hologram on the front, obtained using special anti-forgery techniques, a guarantee of the quality and genuineness of the circuit-breaker as an ABB SACE product.

Company Quality System

The ABB SACE Quality System conforms with the following Standards:

- ISO 9001 international Standard;
- EN ISO 9001 (equivalent) European Standards;
- UNI EN ISO 9001 (equivalent) Italian Standards.

The ABB SACE Quality System attained its first certification with the RINA certification body in 1990.

Environmental Management System, Social Responsibility and Ethics

Attention to protection of the environment is a priory commitment for ABB SACE. Confirmation of this is the realisation of an Environmental Management System certified by RINA (ABB SACE was the first industry in the electromechanical sector in Italy to obtain this recognition) in conformity with the International ISO14001 Standard. In 1999 the Environmental Management System was integrated with the Occupational Health and Safety Management System according to the OHSAS 18001 Standard and later, in 2005, with the SA 8000 (Social Accountability 8000) Standard, committing itself to respect of business ethics and working conditions.

The commitment to environmental protection becomes concrete through:

- selection of materials, processes and packaging which optimise the true environmental impact of the product;
- use of recyclable materials;
- voluntary respect of the RoHS directive[G6.4].

Identification of the SACE Tmax XT circuit-breakers

The characteristics of the circuit-breaker are given on the rating nameplate on the front of the circuit-breaker, and on the side rating plate.

Front label

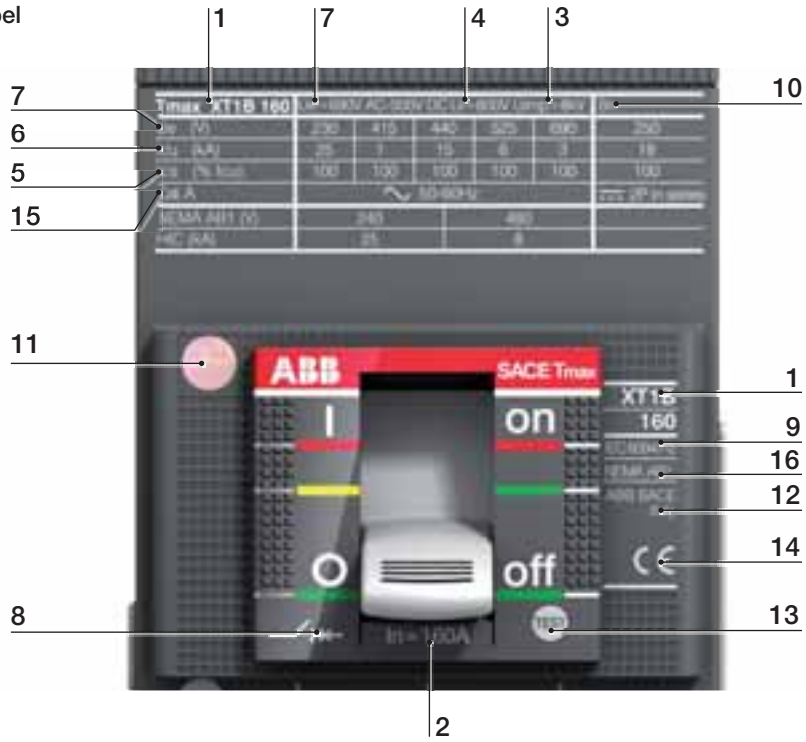

Side label

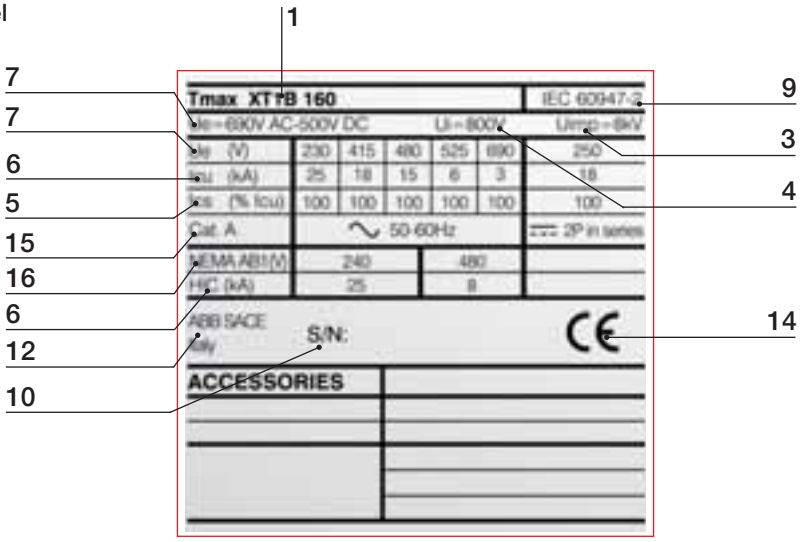

1 Name of the circuit-breaker and performance level(*)
2 In: rated current of the circuit-breaker(*)
3 Uimp: rated impulse withstand voltage(*)
4 Ui: insulation voltage(*)
5 Ics rated short-circuit duty breaking capacity(*)
6 Icu: rated ultimate short-circuit breaking capacity(*)
7 Ue: rated service voltage(*)
8 Symbol of isolation behaviour(*)
9 Reference Standard IEC 60947-2(*)
10 Serial number
11 Anti-forgery logo
12 Place of manufacture
13 Test pushbutton
14 CE marking
15 Utilisation Category
16 Reference Standard NEMA-AB1

(*) In compliance with the IEC 60947-2 Standard

Nomenclature of the trip units and residual current protection devices

The tables below give details of the logic with which each thermomagnetic trip units, electronic trip units and residual current devices has been named.

Magnetic trip units

Family Name		Protection
M: magnetic	+	F: with fixed threshold A: with adjustable threshold

Thermomagnetic trip units

Family Name		Protection
TM: thermomagnetic	+	A: with adjustable thermal and magnetic threshold D: with adjustable thermal and fixed magnetic threshold G: with adjustable thermal and fixed magnetic threshold (for generator protection)

Example:
- MA: magnetic only trip unit, with adjustable protection threshold;
- TMD: thermomagnetic trip unit, with adjustable thermal and fixed magnetic protection threshold;
- TMG: thermomagnetic trip unit, with adjustable thermal and fixed magnetic protection threshold, specifically for protection of generators.

Electronic trip units

Family Name		Application		Protection	Circuit-breaker[1]
Ekip	+	….: Distribution M: Motor protection G: Generator protection N: Neutral	+	I LS/I LSI LSIG LIU LRIU	XT2 XT4

[1] Circuit-breaker has to be defined only with loose release.

Example:
- Ekip LS/I: electronic trip unit for distribution networks protection, with “L” against overload and as an alternative “S” protection function against delay short circuit or “I” protection function against instantaneous short circuit;
- Ekip M-LRIU: electronic trip unit for motors protection, with LRIU protection functions;
- Ekip N-LS/I XT2: loose electronic trip unit for the neutral protection, with “L” against overload and as an alternative “S” protection function against delay short circuit or “I” protection function against instantaneous short circuit.

Residual Current Protection Devices

Family Name		Typology
RC	+	Inst: instantaneous type “A” Sel: selective type “A” Sel 200: selective type “A” reduced to 200mm B Type: selective type “B”

Example:
- RC Inst: residual current protection device with instantaneous timing;
- RC Sel 200: residual current protection device with adjustable time trip, reduced to 200mm;
- RC B type: residual current protection device “B” type.

The SACE Tmax XT Ranges

Index

The SACE Tmax XT family ranges **2**/2

Circuit-breakers for power distribution

Main characteristics **2**/3

Thermomagnetic trip units **2**/5

Electronic trip units **2**/7

Circuit-breakers for motors protection

Main characteristics **2**/11

Magnetic trip units **2**/13

Electronic trip units **2**/14

Circuit-breakers for generator protection

Main characteristics **2**/18

Circuit-breakers for oversized neutral protection

Main characteristics **2**/22

Switch-disconnectors

Main characteristics **2**/24

Special applications

400Hz installations **2**/25

Communication system **2**/26

The SACE Tmax XT family ranges

The SACE Tmax XT moulded-case circuit-breaker family complies with different installation requirements. Circuit-breakers are available with trip units dedicated to different applications, such as power distribution, generator protection, motor protection and oversized neutral protection. Some of these circuit-breakers can also be used in communication systems and plants that function at 400Hz. Switch-disconnectors are also available.

In = Rated uninterrupted current[G2.2]	XT1 160	XT2 160	XT3 250	XT4 250
Power distribution				
Thermomagnetic trip units				
TMD	16…160		63…250	
TMD/TMA		1.6…160		16…250
Electronic trip units				
Ekip LS/I		10…160		40…250
Ekip I		10…160		40…250
Ekip LSI		10…160		40…250
Ekip LSIG		10…160		40…250
Motor protection				
Magnetic trip units				
MF/MA		1…100[1]	100…200[1]	10…200[1]
Electronic trip units				
Ekip M-I		20…100[1]		
Ekip M-LIU		25…100[1]		40…160[1]
Ekip M-LRIU		25…100[1]		40…160[1]
Generator Protection				
Thermomagnetic trip units				
TMG		16…160	63…250	
Electronic trip units				
Ekip G-LSI		10…160		40…250
Oversized Neutral Protection 160%				
Electronic trip units				
Ekip N-LS/I		10…100[2]		40…160[2]
Switch-disconnectors	■		■	■
Special applications				
400 Hz	■	■	■	■
Communication		■		■

[1] Only 3 poles version
[2] Only 4 poles version

Circuit-breakers for power distribution

Main characteristics

SACE Tmax XT moulded-case circuit-breakers are the ideal solution for all distribution levels, from the main low voltage switchboard to the subswitchboards in the installation. They feature high specific let-through current peak and energy limiting characteristics that allow the circuits and equipment on the load side to be sized in an optimum way. SACE Tmax XT circuit-breakers with thermomagnetic and electronic trip units protect against overloads, short-circuits, earth faults and indirect contacts in low voltage distribution networks.

The SACE Tmax XT family of moulded-case circuit-breakers can be equipped with:

- thermomagnetic trip units(G3.2), for direct and alternating current network protection, using the physical properties of a bimetal and an electromagnet to detect the overloads and short-circuits;
- electronic trip units(G3.4), for alternating current network protection. Releases with microprocessor technology obtain protection functions that make the operations extremely reliable and accurate. The power required for operating them correctly is supplied straight from the current sensors of the releases. This ensures that they trip even in single-phase conditions and on a level with the minimum setting.
  The electronic protection trip unit consists of:
  - 3 or 4 current sensors (current transformers);
  - a protection unit;
  - an opening solenoid (built into the electronic trip unit).

Characteristics of Electronic trip units SACE Tmax XT	
Operating temperature	-25°C…+70°C
Relative humidity	98%
Self-supplied	0.2xIn (single phase)(1) (2)
Auxiliary supply (where applicable)	24V DC ± 20%
Operating frequency	45…60Hz or 400…440Hz
Electromagnetic compatibility	IEC 60947-2 Annex F

(1) 0.32 x In for Ekip N-LS/I
(1) For 10A and 25A ask ABB

Circuit-breakers for power distribution

Main characteristics

Characteristics of circuit-breakers for power distribution

			XT1					XT2					XT3		XT4				
Size(G2.1)		[A]	160					160					250		160/250				
Poles		[Nr.]	3, 4					3, 4					3, 4		3, 4				
Rated service voltage, **Ue**(G2.4)	(AC) 50-60Hz	[V]	690					690					690		690				
	(DC)	[V]	500					500					500		500				
Rated insulation voltage, **Ui**(G2.5)		[V]	800					1000					800		1000				
Rated impulse withstand voltage, **Uimp**(G2.6)		[kV]	8					8					8		8				
Versions			Fixed, Plug-in					Fixed, Withdrawable, Plug-in					Fixed, Plug-in		Fixed, Withdrawable, Plug-in				
Breaking capacities			**B**	**C**	**N**	**S**	**H**	**N**	**S**	**H**	**L**	**V**	**N**	**S**	**N**	**S**	**H**	**L**	**V**
Trip units			Thermomagnetic					Thermomagnetic, Electronic					Thermomag-netic		Thermomagnetic, Electronic				
TMD/TMA								■							■				
TMD					■								■						
Ekip LS/I								■							■				
Ekip I								■							■				
Ekip LSI								■							■				
Ekip LSIG								■							■				
Interchangeability								■							■				

■ Complete circuit-breaker
▲ Loose trip unit

TMD

Main characteristics:

- available for XT1 and XT3 in the three-pole and four-pole versions;
- protections:
  - against overload (L): adjustable protection threshold from 0.7...1xIn, with inverse long-time trip curve;
  - against instantaneous short-circuits (I): fixed 10xIn protection threshold, with instantaneous trip curve;
- 100% neutral protection in four-pole circuit-breakers. 50% neutral protection is only available for In≥125A;
- the thermal protection setting is made by turning the relative cursor on the front of the release.

Example with XT3 250A

Rotary switch for thermal protection setting

XT1

TMD

Breaking capacity		B	B	B,C	B,C,N	B,C,N	ALL	ALL	ALL	ALL	ALL	ALL
L	In [A]	16	20	25	32	40	50	63	80	100	125	160
	Neutral [A] - 100%	16	20	25	32	40	50	63	80	100	125	160
I_1 = 0.7...1xIn	Neutral [A] - 50%	–	–	–	–	–	–	–	–	–	80	100
I	I_3 [A]	450	450	450	450	450	500	630	800	1000	1250	1600
	Neutral [A] - 100%	450	450	450	450	450	500	630	800	1000	1250	1600
I_3 = 10xIn	Neutral [A] - 50%	–	–	–	–	–	–	–	–	–	800	1000

XT3

TMD

L	In [A]	63	80	100	125	160	200	250
	Neutral [A] - 100%	63	80	100	125	160	200	250
I_1 = 0.7...1xIn	Neutral [A] - 50%	–	–	–	80	100	125	160
I	I_3 [A]	630	800	1000	1250	1600	2000	2500
	Neutral [A] - 100%	630	800	1000	1250	1600	2000	2500
I_3 = 10xIn	Neutral [A] - 50%	–	–	–	800	1000	1250	1600

TMD/TMA

Main characteristics:

- available for XT2 and XT4 in the three-pole and four-pole versions;
- protections:
  - against overload (L): adjustable protection threshold from 0.7...1xIn, with inverse long time trip curve;
  - against instantaneous short-circuit (I):
    - fixed protection threshold for In≤32A,
    - adjustable threshold beteewn 8…10xIn for 40A,
    - adjustable threshold beteewn 6…10xIn for 50A,
    - adjustable threshold beteewn 5…10xIn for In≥63A;
- 100% neutral protection in four-pole circuit-breakers. 50% neutral protection is only available for In≥125A;
- the thermal and magnetic protection settings are made by turning the relative cursors on the front of the release.

Example with XT4 250A

Rotary switch for magnetic protection setting

Rotary switch for thermal protection setting

XT2

TMD/TMA

L	In [A]	1.6(1)	2(1)	2.5(1)	3.2(1)	4(1)	5(1)	6.3(1)	8(1)	10(1)	12.5(1)	16	20	25	32	40	50	63	80	100	125	160
	Neutral [A] - 100%	1.6	2	2.5	3.2	4	5	6.3	8	10	12.5	16	20	25	32	40	50	63	80	100	125	160
I_1 = 0.7…1xIn	Neutral [A] - 50%	–	–	–	–	–	–	–	–	–	–	–	–	–	–	–	–	–	–	–	80	100
I	TMD	16	20	25	32	40	50	63	80	100	125	300	300	300	320							
	TMA															300…400	300…500	300…630	400…800	500…1000	625…1250	800…1600
	Neutral [A] - 100%	16	20	25	32	40	50	63	80	100	125	300	300	300	320	300…400	300…500	300…630	400…800	500…1000	625…1250	800…1600
	Neutral [A] - 50%	–	–	–	–	–	–	–	–	–	–	–	–	–	–	–	–	–	–	–	400…800	1000…2000

(1) Available only as complete circuit-breaker

XT4

TMD/TMA

L	In [A]	16	20	25	32	40	50	63	80	100	125	160	200	225	250
	Neutral [A] - 100%	16	20	25	32	40	50	63	80	100	125	160	200	225	250
I_1 = 0.7…1xIn	Neutral [A] - 50%	–	–	–	–	–	–	–	–	–	80	100	125	125	160
I	TMD	300	300	300	320										
	TMA					300…400	300…500	315…630	400…800	500…1000	625…1250	800…1600	1000…2000	1125…2250	1250…2500
	Neutral [A] - 100%	300	300	300	320	300…400	300…500	315…630	400…800	500…1000	625…1250	800…1600	1000…2000	1125…2250	1250…2500
	Neutral [A] - 50%	–	–	–	–	–	–	–	–	–	315…630	500…1000	625…1250	625…1250	500…1000

Ekip I

Main characteristics:

- usable with the XT2 and XT4 circuit-breaker in the three-pole and four-pole versions;
- protections:
  - against instantaneous short-circuit (I): adjustable protection threshold from 1...10xIn, with instantaneous trip curve;
  - of the neutral in four-pole circuit-breakers:
    - for In≥100A in the OFF or ON positions, 50% and 100% of the phases can be selected;
    - for In<100A, neutral protection is fixed at 100% of the phases and disableded by user;
- manual setting using the relative dip-switches, which allow the settings to be made even when the trip unit is off;
- LED:
  - LED lit with a steady green light indicating that the trip unit is supplied correctly. The LED comes on when the current exceeds 0.2xIn;
  - LED with a steady red light, indicating that protection I has tripped; Red LED light on connecting Ekip TT or Ekip T&P accessories after circuit-breaker opening for “I protection” intervention;
  - Ekip I is equipped with a trip coil disconnection protection device that detects whether the opening solenoid has disconnected. Signalling is made by all the LEDs flashing simultaneously;
- test connector on the front of the trip unit;
  - to connect the Ekip TT trip test unit, which allows trip test, LED test and signalling about latest trip happened;
  - to connect the Ekip T&P unit, which allows the measurements to be read, the trip test to be conducted and the I protection function test to be carried out;
- self-supply from a minimum current of 0.2xIn up.

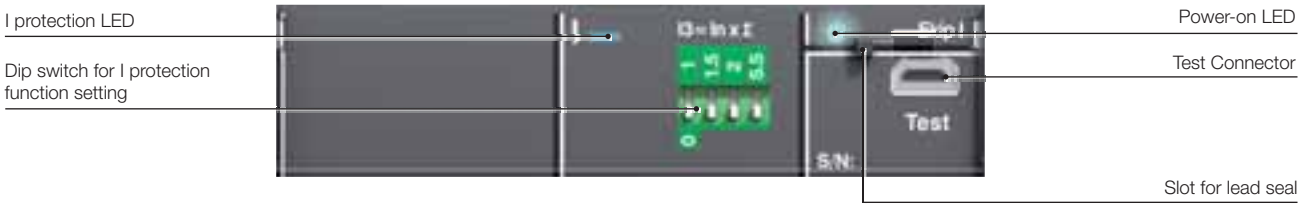

Ekip I

Protection function		Trip threshold	Trip curve[1]	Excludability	Relation
I	Against short-circuits with adjustable treshold and instantaneous trip time	Manual setting: I_3= 1, 1.5, 2, 2.5, 3, 3.5, 4.5, 5.5, 6.5, 7, 7.5, 8, 8.5, 9, 10xIn Tolerance: ±20% I>4In ±10% I≤4In	≤40 ms	Yes	t = k

[1] Tollerances in case of:
– self-powered trip unit at full power;
– 2 or 3 phase power supply.
In conditions other than those considered, the trip time is ≤60 ms.

Ekip LS/I

Main characteristics: :

- available for XT2 and XT4 in the three-pole and four-pole versions;
- protections:
  - against overload (L): 0.4...1xIn adjustable protection threshold, with adjustable time trip curve;
  - against short-circuit with delay (S): 1...10xIn adjustable protection threshold, with adjustable time trip curve (as an alternative to I protection);
  - against instantaneous short-circuit (I): 1...10xIn adjustable protection threshold, with instantaneous trip curve (as an alternative to S protection);
  - of the neutral in four-pole circuit-breakers:
    - for In ≥100A can be selected in the OFF or ON positions, 50%, 100% of the phases;
    - for In <100A, neutral protection is fixed at 100% of the phases and disableded by user;
- manual setting using the relative dip-switches on the front of the trip unit, which allow the settings to be made even when the trip unit is off;
- LED:
  - LED with steady green light indicating that the trip unit is supplied correctly. The LED comes on when the current exceeds 0.2xIn;
  - red LED for each protection:
    - L: LED with steady red light, indicates pre-alarm for current exceeding $0.9xI_1$;
    - L: LED with flashing red light, indicates alarm for current exceeding setted threshold;
    - LS/I: LED with steady red light, shows that the protection has tripped. After the circuit-breaker has opened, connect the Ekip TT or Ekip T&P accessory to find out which protection function tripped the trip unit;
  - Ekip LS/I is equipped with a trip coil disconnection detection device that detects whether the opening solenoid has disconnected. Signalling is made by all the LEDs flashing simultaneously;
- test connector on the front of the release:
  - to connect the Ekip TT trip test unit, which allows trip test, LED test and signalling about latest trip happened;
  - to connect the Ekip T&P unit, which allows the measurements to be read, the trip test to be conducted and the protection functions test to be carried out;
- thermal memory which can be activated by Ekip T&P;
- self-supply from 0.2xIn minimum current up.

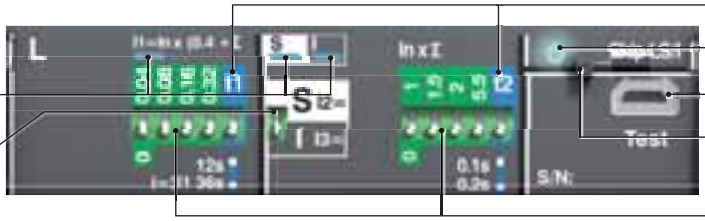

Ekip LS/I

Protection function		Trip threshold	Trip curve[1]	Excludability	Relation	Thermal memory
L	Against overloads with long inverse time delay trip according to IEC 60947-2 Standard	Manual setting: I_1= 0.4...1xIn step 0.04 Tolerance: trip between 1.05…1.3 I_1 (IEC 60947-2)	Manual setting: t_1= 12-36s at I=3xI_1 Tolerance: ±10% up to 4xIn ±20% from 4xIn	–	$t = k/I^2$	Yes
S	Against short-circuits with indipendend time delay (t=k)	Manual setting: I_2= 1-1.5-2-2.5-3-3.5-4.5-5.5-6.5-7-7.5-8-8.5-9-10xIn Tolerance: ±10%	t_2= 0.1-0.2s Tolerance: ±10% up to 4xIn ±20% from 4xIn	Yes	t = k	–
I	Against short-circuits with adjustable treshold and instantaneous trip time	Manual setting: I_3= 1-1.5-2-2.5-3-3.5-4.5-5.5-6.5-7-7.5-8-8.5-9-10xIn Tolerance: ±10%	Instantaneous	Yes	t = k	–

[1] Tollerances in case of:
– self-powered trip unit at full power;
– 2 or 3 phase power supply.
In conditions other than those considered, the following tollerance hold:

Protection	Trip threshold	Trip time
L	release between 1.05 and 1.25 x I_1	±20%
S	±10%	±20%
I	±15%	≤60 ms

Ekip LSI and Ekip LSIG

Main characteristics:

- available for XT2 and XT4 in three-pole and four-pole versions;
- protections:
  - against overloads (L): 0.4...1xIn adjustable protection threshold, with adjustable time trip curve;
  - against short-circuits with delay (S): 1...10xIn adjustable protection threshold, with adjustable time trip curve (short inverse time ($t=k^2$) or indipendent time (t=k));
  - against instantaneous short-circuits (I): 1...10xIn adjustable protection threshold, with instantaneous trip curve;
  - against earth faults (G): 0.2...1xIn adjustable protection threshold, with indipendent time trip curve;
  - of the neutral in four-pole circuit-breakers:
    - for In≥100A can be selected in OFF or ON, 50%, 100% of phases;
    - for In<100A neutral protection is fixed on 100% of phases and disableded by user;
- setting:
  - manual setting using the relative dip-switches on the front of the trip unit, which allow the settings to be made even when the trip unit is off;
  - electronic setting, made both locally using the Ekip T&P or Ekip Display accessory and via remote control, by means of the Ekip Com unit;
- LED:
  - LED on with steady green light indicating that the trip unit is supplied correctly. The LED comes on when the current exceeds 0.2xIn;
  - red LED for each protection:
    - L: LED with steady red light, indicates pre-alarm for current exceeding $0.9xI_1$;
    - L: LED with flashing red light, indicates alarm for current exceeding setted threshold;
    - LSIG: LED with steady red light, shows that the protection has tripped. After the circuit-breaker has opened, connect the Ekip TT or Ekip T&P accessory to find out which protection function tripped the trip unit;
  - the trip unit is equipped with a device that detects the eventual opening solenoid disconnection thanks to the simultaneous blinking of all the LED;
- test connector on the front of the release:
  - to connect the Ekip TT trip test unit, which allows trip test, LED test and signalling about the latest trip happened;
  - to connect the Ekip T&P unit, which allows the measurements to be read, the trip test to be conducted, the protection functions test to be carried out, electronic setting of the protection functions of the trip unit and of the communication parameters;
- thermal memory which can be activated by Ekip T&P or Ekip Display;
- self-supply from a minimum current of 0.2xIn up;
- the three-pole version can be accessorized with external neutral;
- with the addition of the Ekip Com in the circuit-breaker, you can:
  - acquire and transmit a wide range of information via remote control;
  - accomplish the circuit-breaker opening and closing commands by means of the motor operator in the electronic version (MOE-E);
  - know the state of the circuit-breaker (open/closed/trip) via remote control;
  - setting the configuration and programming the unit, such as the current thresholds and the protection function curves.

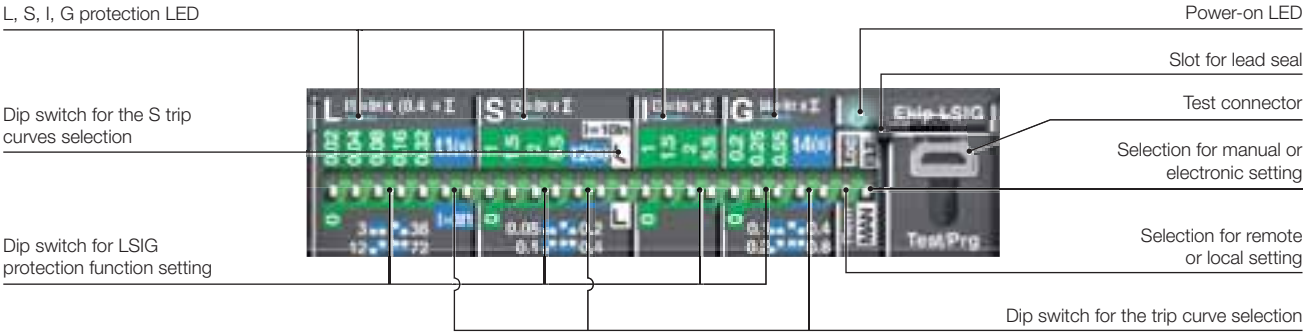

Ekip LSI – Ekip LSIG

Protection function		Trip threshold	Trip curve[1]	Excludability	Relation	Thermal memory
L	Against overloads with long inverse time delay trip according to IEC 60947-2 Standard	Manual setting: I_1= 0.4...1xIn step 0.02 Tolerance: trip between 1.05…1.3 I_1 (IEC 60947-2)	Manual setting: t_1 = 3-12-36-72s a I=3xI_1 Tolerance: ±10% up to 4xIn ±20% from 4xIn	–	t = k/I^2	–
		Electronic setting: I_1= 0.2...1xIn step 0.01 Tolerance: trip between 1.05…1.3 I_1 (IEC 60947-2)	Electronic setting: t_1 = 3...72s at I=3xI_1 step 0.2 Tolerance: ±10% up to 4xIn ±20% from 4xIn	–	t = k/I^2	Yes
S	Against short-circuits with inverse short (t=k/I^2) or indipendent (t=k) time delay trip	Manual setting: I_2 = 1-1.5-2-2.5-3-3.5-4.5-5.5-6.5-7-7.5-8-8.5-9-10xIn Tolerance: ±10%	Manual setting: t_2= 0.05-0.10-0.20-0.40s at 10xIn Tolerance: ±10% up to 4xIn ±20% from 4xIn	Yes	t = k/I^2	–
		Electronic setting: I_2 = 1...10xIn step 0.1 Tolerance: ±10%	Electronic setting: t_2 = 0.05...0.40s at 10xIn step 0.01 Tolerance: ±10% up to 4xIn ±20% from 4xIn	Yes	t = k/I^2	–
		Manual setting: I_2 = 1-1.5-2-2.5-3-3.5-4.5-5.5-6.5-7-7.5-8-8.5-9-10xIn Tolerance: ±10%	Manual setting: t_2 = 0.05-0.1-0.2-0.4s Tolerance: ±10% up to 4xIn ±20% from 4xIn	Yes	t = k	–
		Electronic setting: I_2 = 1...10xIn step 0.1 Tolerance: ±10%	Electronic setting: t_2 = 0.05...0.4s step 0.01 Tolerance: ±10% up to 4xIn ±20% from 4xIn	Yes	t = k	–
I	Against short-circuits with adjustable threshold and instantaneous trip time	Manual setting: I_3 = 1-1.5-2-2.5-3-3.5-4.5-5.5-6.5-7-7.5-8-8.5-9-10xIn Tolerance: ±20%	Instantaneous	Yes	t = k	–
		Electronic setting: I_3 = 1...10xIn step 0.1 Tolerance: ±10%	Instantaneous	Yes	t = k	–
G	Against earth fault with independent time delay trip[2]	Manual setting: I_4 = 0.2-0.25-0.45-0.55-0.75-0.8-1xIn Tolerance: ±10%	Manual setting: t_4 = 0.1-0.2-0.4-0.8s Tolerance: ±15%	Yes	I^2t = k	–
		Electronic setting: I_4 = 0.2...1xIn step 0.1 Tolerance: ±10%	Electronic setting: t_4 = 0.1...0.8s step 0.01s Tolerance: ±15%	Yes	I^2t = k	–

[1] Tollerances in case of:
– self-powered trip unit at full power;
– 2 or 3 phase power supply.
In conditions other than those considered, the following tollerance hold:

Protection	Trip threshold	Trip time
L	release between 1.05 and 1.3 x I_1	±20%
S	±10%	±20%
I	±15%	≤60 ms
G	±15%	±20%

[2] Protection G is inhibited for currents higher than 4 In when In≥40A and for currents higher than 2 In for In<40A.

Circuit-breakers for motors protection

Main characteristics

The safety and reliability of the solution are important aspects that must be considered when choosing and manufacturing the system for starting(G4.3 and G4.4) and monitoring motors.
Start-up is a particularly critical phase for the motor itself and for the installation powering it. Even rated service needs to be adequately monitored and protected so as to deal with any faults that might occur.
When it comes to direct starting, ABB SACE proposes two different solutions:

- **a conventional system** with three poles a circuit-breaker equipped with a magnetic only trip unit for protection against short-circuits, a thermal relay for protection against overloads and phase failure or imbalance, and a contactor to operate the motor;
- **an advanced protection system** which integrates all the protection and monitoring functions, and a contactor for operating the motor, in the circuit-breaker itself.

Several different factors must be considered when choosing and coordinating the protection and operating devices, e.g.:

- the electrical specifications of the motor (type, power rating, efficiency, cosφ);
- the starting type and diagram;
- the fault current and voltage in the part of the network where the motor is installed.

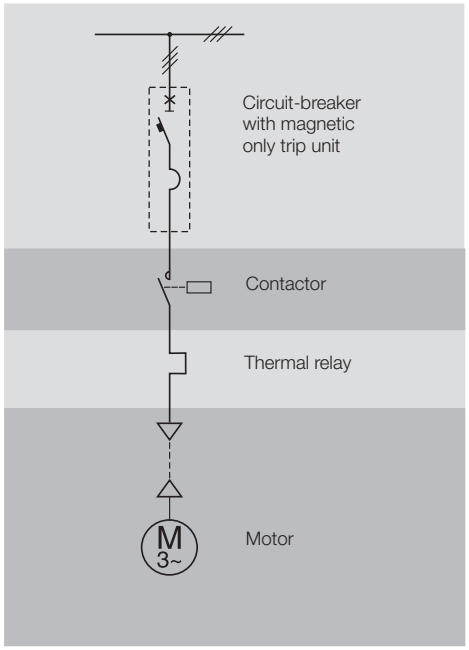

Conventional system

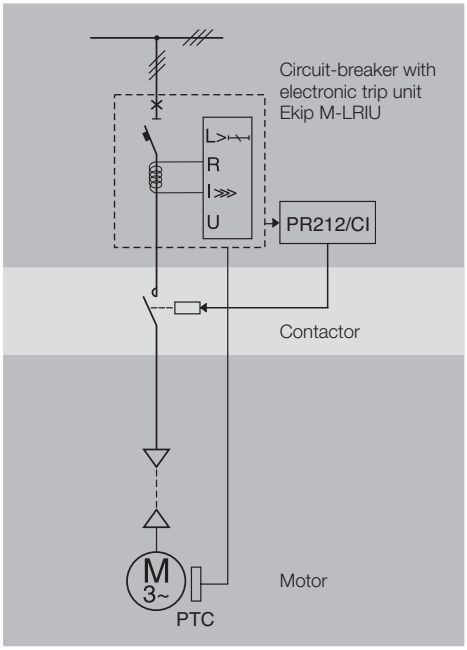

Advanced protection system

Consult the QT7 Technical Application Paper: “The asynchronous three-phase motor: general information and ABB’s offer for coordinating the protections” for further details.
The motor protection and operating devices must be chosen in accordance with the coordination tables provided by ABB either through documentation “Coordination tables” or on the web site: http://www.abbcontrol.fr/coordination_tables/.

Circuit-breakers for motors protection

Main characteristics

Characteristics of circuit-breakers for protecting motors

			XT2					XT3		XT4				
Size(G2.1)		[A]	160					250		160/250				
Poles		[Nr.]	3					3		3				
Rated service voltage, **Ue**(G2.4)	(AC) 50-60Hz	[V]	690					690		690				
	(DC)	[V]	500					500		500				
Rated insulation voltage, **Ui**(G2.5)		[V]	1000					800		1000				
Rated impulse withstand voltage, **Uimp**(G2.6)		[kV]	8					8		8				
Versions			Fixed, Withdrawable, Plug-in					Fixed, Plug-in		Fixed, Withdrawable, Plug-in				
Breaking capacities			**N**	**S**	**H**	**L**	**V**	**N**	**S**	**N**	**S**	**H**	**L**	**V**
Trip Units			Magnetic, Electronic					Magnetic		Magnetic, Electronic				
MF/MA					■			■				■		
Ekip M-I					■									
Ekip M-LIU					▲							▲		
Ekip M-LRIU					▲							▲		
Interchangeability					■							■		

■ Complete circuit-breaker
▲ Loose trip unit

Circuit-breakers for motors protection

Magnetic trip units

MF/MA

Main characteristics:

- available for XT2, XT3 and XT4 in the three-pole version only, these trip units are mainly used for protecting motors, in conjunction with a thermal relay and a contactor;
- protections:
  - against instantaneous short-circuit (I) for XT2: for In≤12.5A the protection threshold I is fixed at 14xIn, whereas for In>12.5A the protection threshold I is adjustable from 6..14xIn;
  - against instantaneous short-circuit (I) for XT3: the protection threshold I is adjustable from 6..12xIn;
  - against instantaneous short-circuit (I) for XT4: the protection threshold I is adjustable from 5..10xIn;
- the magnetic protection setting is made by turning the relative cursor on the front of the release.

Rotary switch for magnetic protection setting

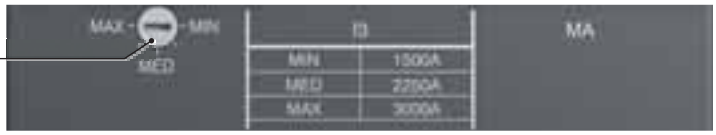

XT2

MF/MA

	In [A]	1[1]	2[1]	4[1]	8.5[1]	12.5[1]	20	32	52	80	100
	I_3 = MF	14	28	56	120	175					
I_3 = 14xIn [A] **I_3 = 6..14xIn [A]**	I_3 = MA						120...280	192…448	314…728	480…1120	600...1400

[1] Available only as complete circuit-breaker

XT3

MA

	In [A]	100	125	160	200
	I_3 [A]	600…1200	750…1500	960…1920	1200…2400
I_3 = 6..12xIn					

XT4

MA

	In [A]	10[1]	12.5[1]	20	32	52	80	100	125	160	200
	I_3 [A]	50…100	62.5…125	100…200	160…320	260…520	400…800	500…1000	625…1250	800…1600	1000…2000
I_3 = 5..10xIn											

[1] Available only as complete circuit-breaker

Ekip M-I

Main characteristics:

- only available for XT2 in three-pole version. It is normally used in combination with a thermal relay and a contactor for motor protection;
- protections:
  - against instantaneous short-circuit (I): protection threshold adjustable from 6...14xIn, with instantaneous trip curve;
- manual setting by means of the special dip-switches positioned on the front of the trip unit, which allow its adjustment even with the trip unit off;
- LED:
  - fixed green LED which indicates correct operation of the trip unit; the LED lights up for a current over 0.2xIn;
- Test connector positioned on the front of the trip unit:
  - for connection of the Ekip TT test unit, which allows the trip test and the LED test;
  - for connection of the Ekip T&P unit, which allows the measurements to be read, to carry out the trip test and to carry out the protection function test;
  - self-supply starting from a minimum current of 0.2 x In.

Ekip M-I

Protection function		Trip threshold	Trip curve[1]	Excludability	Relation	Thermal memory
I	Against short-circuits with adjustable threshold and instantaneous trip time	Manual setting: I_3 = 6-6,5-7-7,5-8-8,5-9-9,5-10-10,5-11-11,5-12,5-13-13,5-14xIn Tolerance: ±10%	Instantaneous	–	t = k	–

[1] Tollerances in case of:
– self-powered trip unit at full power;
– 2 or 3 phase power supply.
In conditions other than those considered, the following tollerance hold:

Protection	Trip threshold	Trip time
I	±15%	≤60 ms

Ekip M-LIU

Main characteristics:

- available for XT2 and XT4 in the three-pole version, this device protects motors. The L protection function protects the motor against overloads, in accordance with the indications and classes defined by standard IEC 60947-4-1;
- protections:
  - against overloads (L): 0.4...1xIn adjustable threshold. The operating time is established by choosing the operating class defined by Standard IEC 60947-4-1: Class 3E, 5E, 10E, 20E;
  - against short-circuits (I): 6...13xIn adjustable threshold with instantaneous operating time;
  - against phase imbalance (U): the protection can be selected either in the ON or OFF position. When the selector is in the ON position, the threshold is 50% I_1, with fixed operating time;
- manual setting using the relative dip-switches on the front of the release;
- LED:
  - LED on with steady green light indicating that the trip unit is supplied correctly. The LED comes on when the current exceeds 0.2xIn;
  - red LED for each protection:
    - L: LED with steady red light, indicates pre-alarm for current exceeding 0.9xI_1;
    - L: LED with flashing red light, indicates alarm for current exceeding setted threshold;
    - LIU: LED with steady red light, shows that the protection has tripped. After the circuit-breaker has opened, connect the Ekip TT or Ekip T&P accessory to find out which protection function tripped the trip unit;
  - release Ekip M-LIU is equipped with a trip coil disconnection detection device that detects whether the opening solenoid has disconnected. Signalling is made by all the LEDs flashing simultaneously;
- test connector on the front of the release:
  - to connect the Ekip TT trip test unit, which allows trip test, LED test and signalling about the latest trip happened;
  - to connect the Ekip T&P unit, which allows the measurements to be read, the trip test to be conducted and the protection function test to be carried out;
- thermal memory always active;
- self-supply starting from a minimum current of 0.2xIn.

Ekip M-LIU

Protection function		Trip threshold	Trip curve[1]	Excludability	Relation	Thermal memory
L	Against overloads with long inverse time delay according to IEC 60947-4-1 Standard	Manual setting: I_1= 0.4...1xIn step 0.04 Tolerance: trip between 1.05...1.3xI_1 (IEC 60947-4-1)	Manual setting: Operating class: 3E, 5E, 10E, 20E Tolerance: ±10% up to 4xIn ±20% from 4xIn	–	$t = k/I^2$	Yes
I	Against short-circuits with adjustable threshold and instantaneous trip time	Manual setting: I_3 = 6...13xIn step 1 Tolerance: ±10%	Instantaneous	–	t = k	–
U	Aganist phase current unbalanced or loss of phase with indipendend time delay	Manual setting: I_6 = ON / OFF When ON, I_6=50% I_1 Tolerance: ±15% (IEC 60947-4-1)	Manual setting: When ON, t_6= 2s Tolerance: ±10%	Yes	t = k	–

[1] Tollerances in case of:
– self-powered trip unit at full power;
– 2 or 3 phase power supply.
In conditions other than those considered, the following tollerance hold:

Protection	Trip threshold	Trip time
L	release between 1.05 and 1.25 x I_1	±20%
I	±15%	≤60 ms
U	±20%	±20%

Ekip M-LRIU

Main characteristics:

- available for XT2 and XT4 in the three-pole version, this device is generally used for protecting integrated motors;
- protections:
  - against overloads (L): 0.4...1xIn adjustable threshold. The operating time is established by choosing the operating class defined by standard IEC 60947-4-1;
  - rotor locking (R): with adjustable threshold in the OFF position or from 3...9xI_1, with settable operating time;
  - against instantaneous short-circuits (I): with adjustable threshold from 6...13xIn and instantaneous operating time;
  - against phase imbalance (U): with adjustable threshold in the ON or OFF positions;
- setting:
  - manual setting using the relative dip-switches on the front of the trip unit, which allow the settings to be made even when the trip unit is off;
  - electronic setting, made both locally using Ekip T&P or Ekip Display accessory and via remote control, by means of the dialogue unit Ekip Com. Use of electronic setting allows other functions to be activated:
    - function for protection against earth faults (G): 0.2..1xIn adjustable protection threshold, with a time constant trip curve;
    - duty mode setting (Normal/Heavy):
      - the Normal duty mode requires use of a circuit-breaker and a contactor. In the case of tripping, the Ekip M-LRIU release commands the opening of the contactor via PR212/CI;
      - the Heavy duty mode foresees circuit-breaker opening for all overcurrent conditions, and just the function of motor operation is entrusted to the contactor;
    - BACK UP function:
      - this protection is designed to handle the situation whereby, in the Normal duty mode, the opening command transmitted to the contactor via PR212/CI has not been implemented, i.e. the contactor has not tripped. If this happens, the Ekip M-LRIU release transmits a trip command directly to the circuit-breaker after having waited a time defined. A waiting time between the command transmitted to the contactor and the back-up command transmitted to the circuit-breaker is required so as to take the contactor opening time into account;
    - PTC protection setting:
      - PTC: this protection, monitors the temperature inside the protected motor by means of a PTC sensor. If the temperature is too high, the Ekip M-LRIU release will command contactor opening (if the mode is “Normal”) or circuit-breaker opening (if the mode is “Heavy”). To realize this protection is necessary to order the connector available for PTC;
- LED:
  - LED on with steady green light indicating that the trip unit is supplied correctly. The LED comes on when the current exceeds 0.2xIn;
  - red LED for each protection:
    - L: LED with steady red light, indicates pre-alarm for current exceeding 0.9xI_1;
    - L: LED with flashing red light, indicates alarm for current exceeding setted threshold;
    - fixed LED MAN/ELT show the kind of active parameters;
    - LRIU: LED with steady red light, shows that the protection has tripped. After the circuit-breaker has opened, connect the Ekip TT or Ekip T&P accessory to find out which protection function tripped the trip unit;
  - Ekip M-LRIU is equipped with a trip coil disconnection detection device that detects whether the opening solenoid has disconnected. Signalling is made by all the LEDs flashing simultaneously;
- test connector on the front of the release:
  - to connect the Ekip TT trip test unit, which allows trip test, LED test and signalling about the latest trip happened;
  - to connect the Ekip T&P unit, which allows the measurements to be read, the trip test to be conducted, the protection function test to be carried out, and electronic setting of the protection function of the release and of the communication parameters;
- thermal memory always active;
- self-supply from a minimum current of 0.2xIn up;

- with the addition of the Ekip Com in the circuit-breaker, you can:
  - acquire and transmit a wide range of information via remote control;
  - accomplish the circuit-breaker opening and closing commands by means of the motor operator in the electronic version (MOE-E);
  - know the state of the circuit-breaker (open/closed/trip) via remote control;
  - setting the configuration and programming parameters of the unit, such as the current thresholds and the protection function curves.

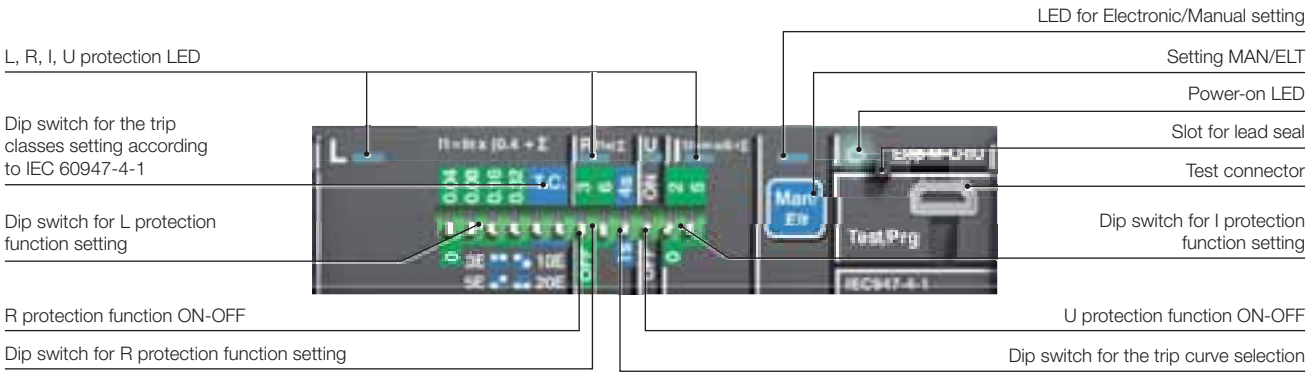

Ekip M-LRIU

Protection function		Trip threshold	Trip curve[1]	Excludability	Relation	Thermal memory
L	Against overloads with long inverse time delay trip according to IEC 60947-4-1	Manual setting: I_1 = 0.4...1xIn step 0.04 Tolerance: in accordance with IEC 60947-4-1	Manual setting: Trip class: 3E, 5E, 10E, 20E Tolerance: ±10% up to 4xIn ±20% from 4xIn	–	$t = k/I^2$	Yes
		Electronic setting: I_1 = 0.4...1xIn step 0.01 Tolerance: in accordance with IEC 60947-4-1	Electronic setting: Trip class: 1...10s step 0.5s Tolerance: ±10% up to 4xIn ±20% from 4xIn	–	$t = k/I^2$	Yes
R	Against rotor block with delayed trip and with an indipendent time delay trip	Manual setting: I_5 = OFF, 3, 6, 9xI_1 Tolerance: ±10% (IEC 60947-4-1)	Manual setting: t_5 = 1, 4s Tolerance: ±10% up to 4xIn ±20% from 4xIn	Yes	t = k	–
		Electronic setting: I_5 = OFF, 3...9xI_1 step 0.1I_1 Tolerance: ±10% (IEC 60947-4-1)	Electronic setting: t_5 =1...4s step 0.5 Tolerance: ±10% up to 4xIn ±20% from 4xIn	Yes	t = k	–
I	Against short-circuits threshold with adjustable threshold and istantaneous trip time	Manual setting: I_3 = 6-8-11-13xIn Tolerance: ±10%	Instantaneous	–	t = k	–
		Electronic setting: I_3 = 1...13xIn Tolerance: ±10%	Instantaneous	–	t = k	–
U	Aganist phase current unbalanced or loss of phase with tripping at indipendent time	Manual setting: I_6 = On / Off When ON, I_6 = 50% I_1 Tolerance: ±15%	Manual setting: t_6 = 2s Tolerance: ±20%	Yes	t = k	–
		Electrical setting: I_6 = On / Off When ON, I_6 = 10%..50% I_1 step 10% I_1 Tolerance: ±15%	Electronic setting: t_6 = 0...5s step 0.5 Tolerance: ±20%	Yes	t = k	–
G	Against earth fault with indipendent time delay trip[2]	Electronic setting: I_4 = 0.2...1xIn step 0.1In Tolerance: ±10%	Electronic setting: t_4 = 0.1...0.8s step 0.01 Tolerance: ±15%	Yes	t = k	–

[1] Tollerances in case of:
– self-powered trip unit at full power;
– 2 or 3 phase power supply.
In conditions other than those considered, the following tollerance hold:

Protection	Trip threshold	Trip time
L	release between 1.05 and 1.25 x I_1	±20%
R	±20%	±20%
I	±20%	≤50 ms
U	±20%	±20%
G	±15%	±20%

[2] Protection G is inhibited for currents higher than 4 In when In≥40A and for currents higher than 2 In for In<40A.

Circuit-breakers for generator protection

Main characteristics

SACE Tmax XT circuit-breakers can be equipped with thermomagnetic trip units with a low magnetic threshold.
This type of release can been designed and made so as to provide a solution for protecting small generators and distribution networks with very long cables (slight end of line fault current owing to the high cable impedance).
Generator protection requires a low magnetic threshold, typically about three times circuit-breaker's rated current, so as to "cut" the short-circuit current in the "transient" zone of the decrement curve of the generator fault current. Consult the "Electrical installation handbook" ABB SACE guide vol. 2 for further details.

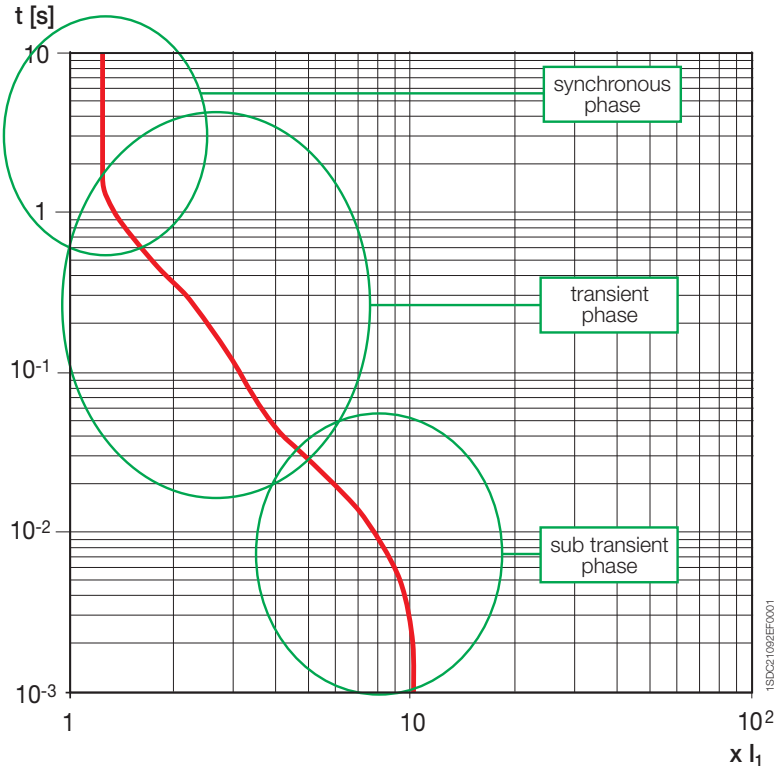

Characteristics of circuit-breakers for protecting generators

			XT2		XT3		XT4	
Size(G2.1)		[A]	160		250		160/250	
Poles		[Nr.]	3, 4		3, 4		3, 4	
Rated service voltage, **Ue**(G2.4)	(AC) 50-60Hz	[V]	690		690		690	
	(DC)	[V]	500		500		500	
Rated insulation voltage, **Ui**(G2.5)		[V]	1000		800		1000	
Rated impulse withstand voltage, **Uimp**(G2.6)		[kV]	8		8		8	
Versions			Fixed, Withdrawable, Plug-in		Fixed, Plug-in		Fixed, Withdrawable, Plug-in	
Breaking capacities			**N**	**S**	**N**	**S**	**N**	**S**
Trip units			Thermomagnetic, Electronic		Thermomagnetic		Electronic	
TMG			■		■			
Ekip G-LS/I			▲				▲	
Interchangeability			■				■	

■ Complete circuit-breaker
▲ Loose trip unit

TMG

Main characteristics:

- available for XT2 and XT3 in the three-pole and four-pole versions;
- protections:
  - against overloads (L): adjustable 0.7...1xIn protection threshold, with inverse long-time trip curve;
  - against instantaneous short-circuits (I): fixed 3xIn protection threshold, with instantaneous trip curve;
  - 100% neutral protection in four-pole circuit-breakers;
- the thermal protection setting is made by turning the relative cursor on the front of the release.

Example with XT3 250A

Rotary switch for thermal protection setting

XT2

TMG

L	In [A]	16[1]	20[1]	25[1]	32[1]	40[1]	50[1]	63[1]	80	100	125	160
	Neutral [A] - 100%	16	20	25	32	40	50	63	80	100	125	160
I_1 = 0.7...1xIn												
I	I_3 [A]	160	160	160	160	200	200	200	240	300	375	480
	Neutral [A] - 100%	–	–	–	–	–	–	–	–	–	450	450
I_3 = 3xIn												

[1] Available only as complete circuit-breaker

XT3

TMG

L	In [A]	63	80	100	125	160	200	250
	Neutral [A] - 100%	63	80	100	125	160	200	250
I_1 = 0.7...1xIn								
I	I_3 [A]	400	400	400	400	480	600	750
	Neutral [A] - 100%	400	400	400	400	480	600	750
I_3 = 3xIn								

Ekip G-LS/I

Main characteristics:

- available for XT2 and XT4 in the three-pole and four-pole versions. Allows the protection against overloads to be extensively adjusted;
- protections:
  - against overloads (L): I_1=0.4...1xIn adjustable protection threshold, with inverse long-time trip curve;
  - against delayed short-circuits (S): 1...10xIn adjustable protection threshold, with adjustable trip curve (as an alternative to I protection);
  - against instantaneous short-circuits (I): 1...10xIn adjustable protection threshold, with instantaneous operating time (as an alternative to S protection);
  - neutral, in four-pole circuit-breakers, can be set in the OFF, ON positions at 50% or 100% of the phases;
- manual setting using the relative dip-switches on the front of the trip unit, which allow the settings to be made even when the trip unit is off;
- LED:
  - LED on with steady green light indicating that the trip unit is supplied correctly. The LED comes on when the current exceeds 0.2xIn;
  - red LED for each protection:
    - L: LED with steady red light, indicates pre-alarm for current exceeding setted threshold;
    - L: LED with flashing red light, indicates alarm for current exceeding setted threshold;
    - LS/I: LED with steady red light, shows that the protection has tripped. After the circuit-breaker has opened, connect the Ekip TT or Ekip T&P accessory to find out which protection function tripped the trip unit;
  - Ekip G-LS/I is equipped with a trip coil disconnection detection device that detects whether the opening solenoid has disconnected. Signalling is made by all the LEDs flashing simultaneously;
- test connector on the front of the release:
  - to connect the Ekip TT trip test unit, which allows trip test, LED test and signalling about the latest trip happened;
  - for connecting the Ekip T&P unit which allows the measurements to be read and the trip test to be carried out;
- thermal memory which can be activated by Ekip T&P;
- self-supply from 0.2xIn up.

Ekip G-LS/I

Protection function		Trip threshold	Trip curve[1]	Excludability	Relation	Thermal memory
L	Against overloads with inverse long-time delayed tripping according to IEC 60947-2 standard	Manual setting: I_1 = 0.4…1xIn step 0.04 Tolerance: trip between 1.05…1.3xI_1 (IEC 60947-2)	Manual setting: t_1 = 3-6s at I = 3xI_1 Tolerance: ±10% up to 4xIn ±15% from 4xIn	–	t = k/I^2	Yes
S	Against short-circuit with indipendent time delay trip	Manual setting: I_2 = 1-1.5-2-2.5-3-3.5-4.5-5.5-6.5-7-7.5-8-8.5-9-10xIn Tolerance: ±10% up to 2xIn ±20% from 2xIn	t_2 = 0.05-0.075-0.1-0.2s Tolerance: ±10% up to 4xIn ±15% from 4xIn	Yes	t = k	–
I	Against short-circuits with adjustable threshold and istantaneous trip time	Manual setting: I_3 = 1-1.5-2-2.5-3-3.5-4.5-5.5-6.5-7-7.5-8-8.5-9-10xIn Tolerance: ±10%	Instantaneous	Yes	t = k	–

[1] Tollerances in case of:
– self-powered trip unit at full power;
– 2 or 3 phase power supply.
In conditions other than those considered, the following tollerance hold:

Protection	Trip threshold	Trip time
L	release between 1.05 and 1.25 x I_1	±20%
S	±10%	±20%
I	±15%	≤60 ms

Circuit-breakers for oversized neutral protection

Main characteristics

The SACE Tmax XT range of circuit-breakers with oversized neutral is used in certain applications where harmonics or unbalance loads or single phase create an overload on the neutral conductor. Under these conditions, a current of a considerable value could travel along the neutral conductor. In particular, third-order harmonics and relative multiples add together on the neutral and give rise to a current value that could be higher than the one which travels along the phase conductors.
For this reason, circuit-breakers with oversized neutral provide adequate protection in installations where the neutral conductor is sized with a larger section than the phase conductors.
The main types of equipment that generate harmonics are given below by way of example:

- personal computers;
- fluorescent lamps;
- static converters;
- no-break power units;
- variable speed drives;
- welding machines.

By and large, the wave shape is distorted owing to the presence of semiconductor devices able to conduct for a fraction of the entire cycle, creating discontinuous trends and consequently introducing numerous harmonics.
Consult the “Electrical installation handbook” ABB SACE guide vol. 2 for further details.

Characteristics of circuit-breakers for oversized neutral protection

			XT2					XT4				
Size(G2.1)		[A]	160					160/250				
Uninterrupted nominal current, **In**		[A]	10, 63, 100					40, 63, 100, 160				
Poles		[Nr.]	4					4				
Rated service voltage, **Ue**(G2.4)	(AC) 50-60Hz	[V]	690					690				
Rated insulation voltage, **Ui**(G2.5)		[V]	1000					1000				
Rated impulse withstand voltage, **Uimp**(G2.6)		[kV]	8					8				
Versions			Fixed, Withdrawable, Plug-in					Fixed, Withdrawable, Plug-in				
Breaking capacity			**N**	**S**	**H**	**L**	**V**	**N**	**S**	**H**	**L**	**V**
Trip units			Electronic					Electronic				
Ekip N-LS/I			▲					▲				
Interchangeability			■					■				

■ Complete circuit-breaker
▲ Loose trip unit

Ekip N-LS/I

Main characteristics:

- available for XT2 and XT4 in the four-pole version;
- protections:
  - against overload (L): I_1=0.4...1xIn adjustable protection threshold, with inverse long-time trip curve;
  - against delayed short-circuits (S): 1...10xIn adjustable protection threshold, with adjustable trip curve (as an alternative to I protection);
  - against instantaneous short-circuit (I): 1...10xIn adjustable protection threshold, with instantaneous operating time (as an alternative to S protection);
  - neutral can be set in the OFF or ON positions, at 100% or at 160% of the phases;
- manual setting using the relative dip-switches on the front of the trip unit, which allow the settings to be made even when the trip unit is off;
- LED:
  - LED on with steady green light indicating that the trip unit is supplied correctly. The LED comes on when the current exceeds 0.32xIn;
  - red LED for each protection:
    - L: LED with steady red light, indicates pre-alarm for current exceeding 0.9xI_1;
    - L: LED with flashing red light, indicates alarm for current exceeding setted threshold;
    - LS/I: LED with steady red light, shows that the protection has tripped. After the circuit-breaker has opened, connect the Ekip TT or Ekip T&P accessory to find out which protection function tripped the trip unit;
  - Ekip N-LS/I is equipped with a device that detects whether the opening solenoid has disconnected. Signalling is made by all the LEDs flashing simultaneously;
- test connector on the front of the release:
  - to connect the Ekip TT trip test unit which allows trip test, LED test and signalling about the latest trip happened;
  - for connecting the Ekip T&P unit, which allows the measurements to be read and the trip test to be carried out;
- thermal memory which can be activated by Ekip T&P;
- self-supply from 0.32xIn.

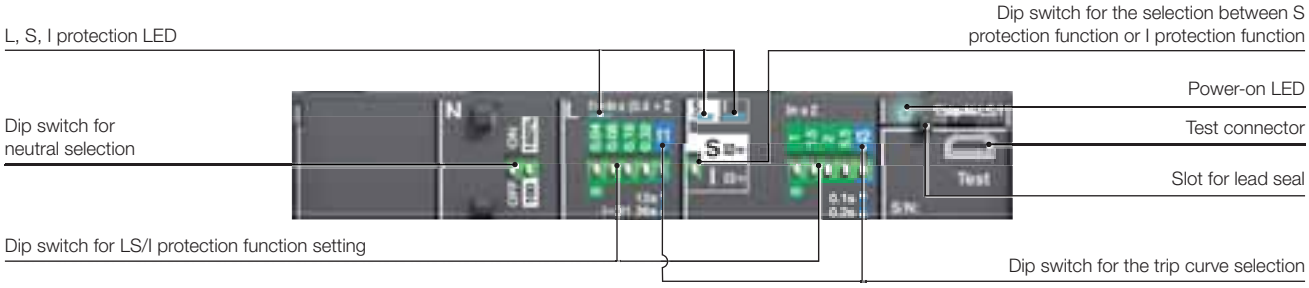

Ekip N-LS/I

Protection function		Trip threshold	Time-current curve[1]	Excludability	Relation	Thermal memory
L	Against overloads with inverse long-time delayed tripping. According to IEC 60947-2 Standard	Manual setting: I_1 = 0.4...1xIn step 0.04 Tolerance: trip between 1.05…1.3xI_1 (IEC 60947-2)	Manual setting: t_1 = 12-36s at I= 3xI_1 Tolerance: ±10% up to 4xIn ±15% from 4xIn	–	$t = k/I^2$	Yes
S	Against short-circuits with inverse short indipendent time delay trip (t=k)	Manual setting: I_2 = 1-1.5-2-2.5-3-3.5-4.5-5.5-6.5-7-7.5-8-8.5-9-10xIn Tolerance: ±10%	t_2 = 0.1-0.2s Tolerance: ±10% up to 4xIn ±20% from 4xIn	Yes	t = k	–
I	Against short-circuits with istantaneous trip time	Manual setting: I_3 = 1-1.5-2-2.5-3-3.5-4.5-5.5-6.5-7-7.5-8-8.5-9-10xIn Tolerance: ±10%	Instantaneous	Yes	t = k	–

[1] Tollerances in case of:
– self-powered trip unit at full power;
– 2 or 3 phase power supply.
In conditions other than those considered, the following tollerance hold:

Protection	Trip threshold	Trip time
L	release between 1.05 and 1.25 x I_1	±20%
S	±10%	±20%
I	±15%	≤60 ms

Switch-disconnectors

Main characteristics

XT1D

XT3D

XT4D

The switch-disconnector (or, in short, disconnector) is a device created from the corresponding circuit-breakers (of which it features the same overall dimensions, versions, fastening mechanisms and ability to be fitted with accessories).
The main function of these devices is to disconnect the circuit they are installed in. In the open position, the disconnector disconnects and guarantees a sufficient insulation distance (between the contacts) to assure safety and to prevent an electrical arc from striking.

Applications

Switch-disconnectors are generally used as:

- general disconnectors of subswitchboards;
- operating and disconnecting devices for lines, pan-assembliess or groups of equipment;
- bus-ties;
- general disconnecting devices for groups of machines;
- general group disconnecting devices for motor operation and protection;
- insulation of small tertiary distribution units.

Protection

A disconnector is unable to automatically break the short-circuit or overload current. For this reason, each switch-disconnector must be protected on the supply side by a coordinated device that safeguards it against short-circuits. The circuit-breaker able to act as a protection for each switch-disconnector is indicated in the table below.

Category of use (G2.11)

The CEI EN 60947-3 Standard defines the utilisation categories for disconnectors in accordance with the table below. Tmax XT disconnectors comply with the AC21A, AC22A and AC23A utilisation categories.

Class of use		
Infrequent operation	**Frequent operation**	**Typical applications**
AC-21A	AC-21B	Control of resistive loads with overloads of modest entity
AC-22A	AC-22B	Control of mixed resistive and inductive loads with overloads of modest entity
AC-23A	AC-23B	Control of motors or other highly inductive loads

Characteristics of switch-disconnectors

			XT1D	XT3D	XT4D
Size(G2.1)		[A]	160	250	250
Rated operating current in class AC21, **Ie**(G.2.12)		[A]	160	250	250
Rated operating current in class AC22, **Ie**(G.2.12)		[A]	160	250	250
Rated operating current in class AC23, **Ie**(G.2.12)		[A]	125	200	200
Poles		[Nr.]	3, 4	3, 4	3, 4
Rated service voltage, **Ue**(G2.4)	(AC) 50-60Hz	[V]	690	690	690
	(DC)	[V]	500	500	500
Rated insulation voltage, **Ui**(G2.5)		[V]	800	800	800
Rated impulse withstand voltage, **Uimp**(G2.6)		[kV]	8	8	8
Test voltage at industrial frequency for 1 min		[V]	3000	3000	3000
Rated breaking capacity in short-circuit, **Icm**(G2.10)	(Min) Disconnector only	[kA]	2.8	5.3	5.3
	(Max) With automatic circuit-breaker on supply side	[kA]	187	105	105
Rated short-time withstand current for 1s, **Icw**(G2.9)		[kA]	2	3.6	3.6
Versions			Fixed, Plug-in	Fixed, Plug-in	Fixed, Withdrawable, Plug-in

Special applications

400Hz installations

The circuit-breakers used for power distribution can operate in alternating current at different frequencies from 50/60Hz (frequencies which the rated performance of the apparatus refers to) so long as the appropriate derating coefficients are applied.
At 400Hz, the performance of the circuit-breakers is reclassified so as to take the following phenomena into account:

- an increase in the skin effect and increased inductive reactance in a way that is directly proportional to the frequency, overheat the conductors or the copper components that normally carry the current in the circuit-breaker;
- lengthening of the hysteresis loop and reduction of the magnetic saturation value, which consequently varies the forces associated with the magnetic field to a given current value.

By and large, these phenomena influence the behaviour of both the thermomagnetic trip units and the current interrupting parts of the circuit-breaker.
Consult the “Electrical installation handbook” ABB SACE guide for further details.

All the circuit-breakers in the SACE Tmax XT family equipped with **thermomagnetic or electronic trip units** (except for the Ekip M-I, Ekip M-LIU and Ekip M-LRIU trip units) can be used in 400Hz installations. The 10A and 25A settings for operation at 400Hz are only available on request.
Contact ABB SACE for more details about performance derating.

Special applications

Communication system

The XT2 and XT4 moulded-case circuit-breakers, equipped with Ekip LSI, Ekip LSIG or Ekip M-LRIU trip unit and Ekip Com dialogue module, can be integrated in supervision systems for control and management of electrical and technological plants.
With XT2 and XT4, equipped with thermomagnetic trip units, Ekip Com dialogue module and Electronic Motor, it is possible to read the state of the circuit-breaker remotely and to operate it.

Protocols available, for communication on bus(G5.4) network with circuit-breakers XT2 and XT4, are:
- Modbus RTU (standard protocol of ABB SACE);
- ProfiBus-DP (usable with ABB SACE devices, jointly with EP010 accessory);
- DeviceNet (usable with ABB SACE devices, jointly with EP010 accessory).

Necessaries accessories for communications are:
- Ekip Com communication module and electronic auxiliary contacts (1Q + 1SY) included in the Ekip Com module. For further details about the Ekip Com communication module, see the paragraph dedicated to this in the Accessories chapter;
- Electronic motor operator MOE-E;
- EP010- Field Bus Plug.

Configuration 1: Supervision (Electronic trip unit and Ekip Com)

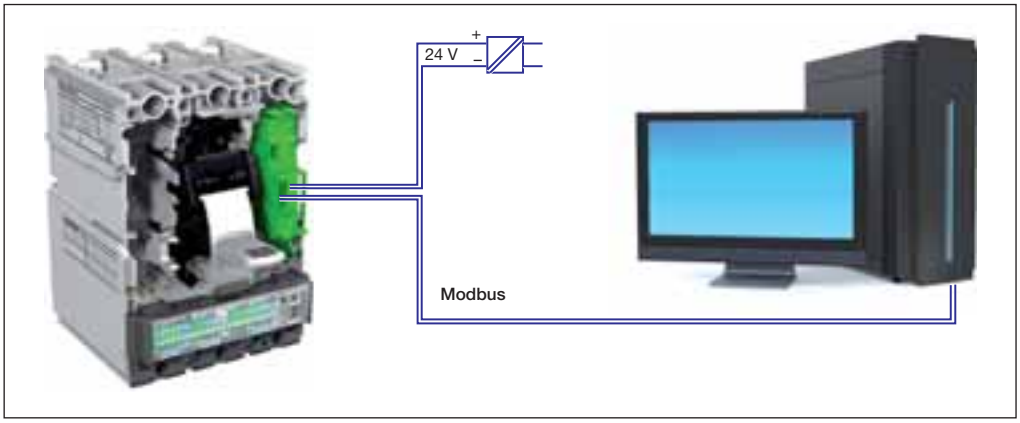

Positioned in the right-hand slot of the circuit-breaker, the Ekip Com accessory connects to the Ekip LSI, Ekip LSIG or Ekip M-LRIU trip unit via connector supplied. Four cables come out of Ekip Com, of which two are required for auxiliary supply and two for connection to the Modbus.

This configuration allows you to:
- read the measurements and settings from the electronic trip unit in remote mode;
- program the electronic trip unit in remote mode;
- know the state of the circuit-breaker (Open/Closed/Tripped) in remote mode.

Consult the Electric Diagrams chapter for further details about wiring.

Configuration 2: Supervision and Remote control (Thermomagnetic trip unit, Ekip Com and MOE-E)

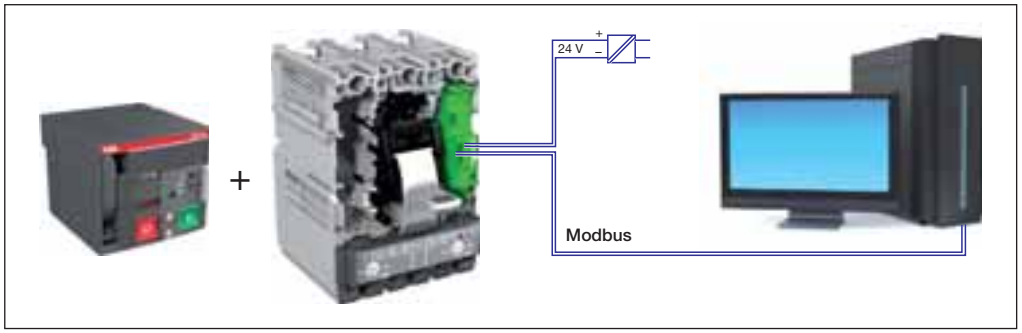

The Ekip Com accessory, positioned in the right-hand slot of the circuit-breaker, is connected with the thermomagnetic trip unit by means of the connector supplied with the Ekip Com, and with the MOE-E by means of the connector on the rear of the MOE-E.
4 cables come out of the Ekip Com, of which 2 are needed for the auxiliary power supply and 2 for connection to the Modbus.

With this configuration it is possible to:
- read the Open/Closed/Tripped state of the circuit-breaker remotely;
- open/close the circuit-breaker remotely.

For further details regarding cabling of the various devices, please refer to the chapter on Electric Diagrams.

Configuration 3: Supervision and Remote Control (Electronic trip unit, Ekip Com and MOE-E)

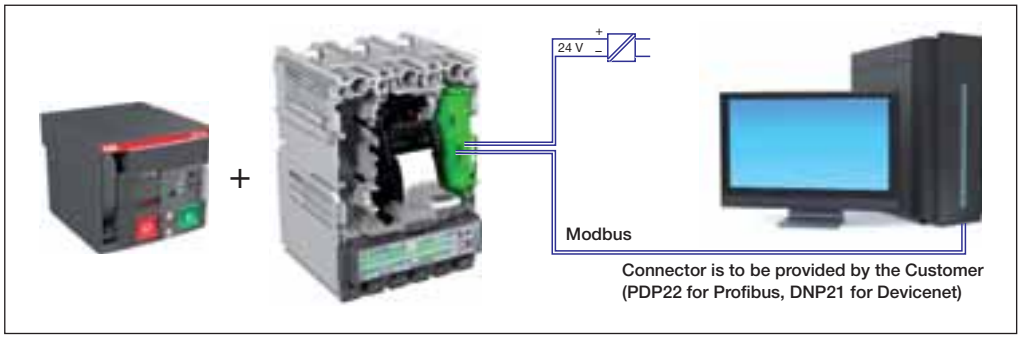

Positioned in the right-hand slot of the circuit-breaker, the Ekip Com accessory connects to the Ekip LSI, Ekip LSIG or Ekip M-LRIU trip unit via connector supplied with Ekip Com and to the MOE-E via connector be present on MOE-E behind. Four cables come out of Ekip Com of which two are required for auxiliary supply, two for connection to the Modbus.

This configuration allows you to:
- read the measurements and settings from the solid-state release in remote mode;
- program the electronic trip unit in remote mode;
- read the state of the circuit-breaker (Open/Closed/Tripped) in remote mode;
- open/close the circuit-breaker in remote mode.

Consult the Electric Diagrams chapter for further details about wiring.

Configuration 4: EP010 - Fieldbus Plug (Electronic trip unit, Ekip Com and EP010)

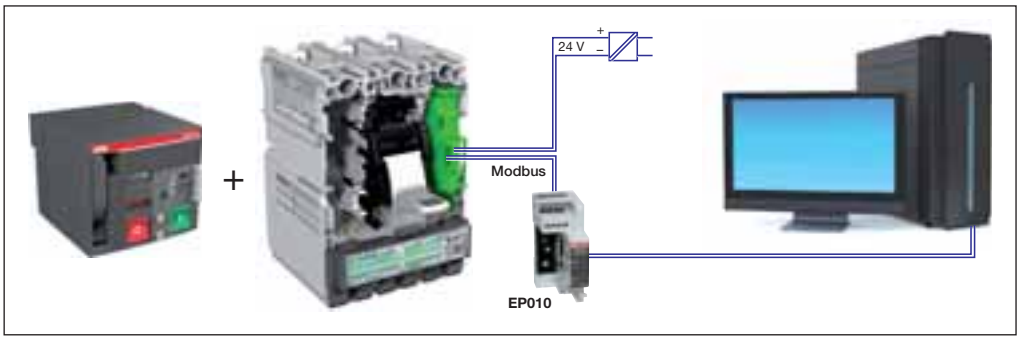

Positioned in the right-hand slot of the circuit-breaker, the Ekip Com accessory connects to the Ekip LSI, Ekip LSIG or Ekip M-LRIU trip unit via connector supplied and to the MOE-E via connector be present on MOE-E behind (MOE-E connection is optional for this configuration). Four cables come out of Ekip Com, of which two are required for auxiliary supply, two for connection to the EP010. Connection of the EP010 to the network is to be made by the Customer and depends on the Field-bus plug connector used.

With this configuration, it is possible to:
- make the SACE Tmax XT circuit-breakers communicate in a network with Profibus or Devicenet comunication protocol;
- read the measurements and settings from the solid-state release in remote mode;
- program the electronic trip unit in remote mode;
- read the state of the circuit-breaker (Open/Closed/Tripped) in remote mode;
- open/close the circuit-breaker in remote mode.

Configuration 5: Interface from front panel (Electronic trip unit, Ekip Com and HMI030 Unit)

With XT2 and XT4 circuit-breakers, equipped with electronical trip unit Ekip LSI, Ekip LSIG or Ekip M-LRIU, in addiction with the interface unit HMI030, it's possible to visualize directly on the panel door the mainly electrical magnitude values and the intervention threshold for the imposed protection.

The necessary accessories, useful to permit the lecture directly from the front of the switchboard are:
- interface device HMI030;
- communication module Ekip Com.

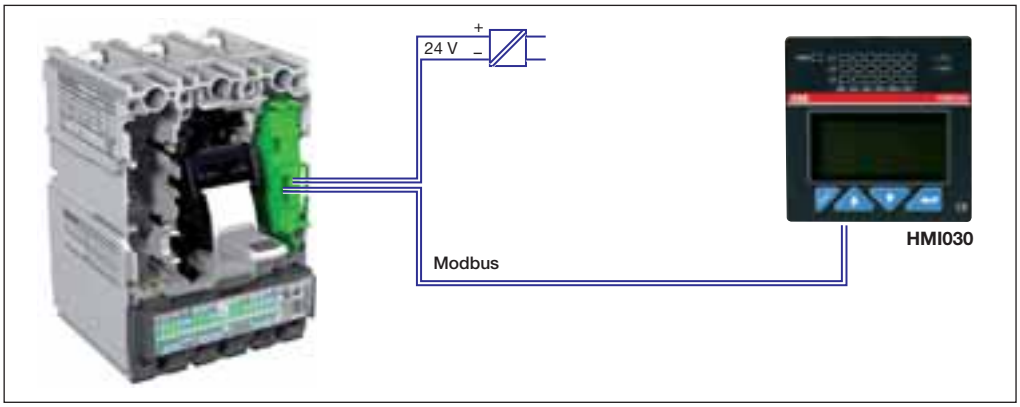

The Ekip Com accessory, positioned in the right-hand slot of the circuit-breaker, is connected to the Ekip LSI, Ekip LSIG or Ekip M-LRIU trip unit by means of supplied connector. Four cables come out of the Ekip Com, two of which are needed for the auxiliary power supply and two for connection to the HMI030.
This configuration makes it possible to read the measurements and settings from the electronic trip unit by means of the HMI030 accessory positioned on the front of the panel.
For further details on cabling the various different devices, refer to the Electric Diagram Chapter.

Accessories

Index

Versions and types

Fixed part of plug-in and withdrawable versions **3**/2
Conversion kits **3**/3

Mechanical Accessories

Connection terminals **3**/5
Terminal covers, phase separators and sealable screws for terminal covers **3**/12
Rotary handle operating mechanism **3**/12
IP54 Protection **3**/13
Front for operating lever mechanism **3**/13
Locks **3**/14
Rear mechanical interlock **3**/16
Bracket for fixing on DIN rail **3**/16
Flanges **3**/16

Electrical Accessories

Service releases **3**/17
Auxiliary contacts **3**/19
Motor operators **3**/23
Connectors for electrical accessories **3**/27
Residual current releases **3**/28

Accessories for electronic trip units

Ekip Display **3**/34
Ekip LED Meter **3**/35
SACE PR212/CI contactor operator **3**/35
Current sensor for external neutral **3**/36
Connection accessories **3**/36

Communication devices and systems

HMI030 interface on the front of the switchboard **3**/37
Ekip Com **3**/38
EP010 - FBP **3**/38
Ekip Connect **3**/39

Test and configuration accessories

Ekip T&P **3**/40
Ekip TT **3**/41

Automatic network-generator transfer unit ATS021-ATS022 ..... **3**/42

Compatibility of accessories **3**/44

Accessories

Versions and types

Fixed circuit-breaker

Tmax XT automatic circuit-breakers are available in the following versions:

- FIXED. Fixed circuit-breakers consist of a current-interrupting part connected to the trip unit, to be installed on the back plate of the cubicle or on a DIN rail;
- PLUG-IN. Plug-in circuit-breakers consist of a fixed part that must be installed on the back plate of the cubicle, and of a moving part, obtained from the fixed circuit-breaker plus the relative kit that converts it from the fixed version into the moving part of the plug-in version;
- WITHDRAWABLE. Withdrawable circuit-breakers consist of a fixed part that must be installed on the back plate of the cubicle equipped with side runners to allow the moving part to be easily racked out and in, winch is obtained from the fixed circuit-breaker plus the relative kit that converts it from the fixed version into the withdrawable moving part. To obtain the withdrawable version, a front accessory to be applied onto the front of the circuit-breaker must be ordered so as to maintain the IP40 degree of protection over the entire isolation run of the circuit-breaker.

If the plug-in circuit-breaker is fitted with electrical accessories, the appropriate connectors for isolation of the relative auxiliary circuits must also be ordered on the other hand, for the withdrawable version there are dedicated accessories, fitted with connectors which allow automatic disconnection in the case of racking-out (consult the “connection of electrical accessories” section in the Accessories chapter).

Plug-in circuit-breaker

Starting from the fixed version, SACE Tmax XT circuit-breakers can easily be converted into the plug-in and withdrawable versions using the relative conversion kits.
The moving part can always be obtained in the required version, fully pre-engineered in the factory, by ordering the fixed circuit-breaker and the conversion kit at the same time.

	Version		
	Fixed	Plug-in	Withdrawable
XT1	■	■	
XT2	■	■	■
XT3	■	■	
XT4	■	■	■

Withdrawable circuit-breaker

Fixed part of plug-in and withdrawable versions

The fixed parts of the plug-in/withdrawable versions are available with front terminals (F) or with horizontal or vertical rear terminals (HR/VR). The terminals are factory-mounted in the horizontal position. In case of need, the Customer can easily rotate the terminals into the vertical position. These fixed parts can be equipped with the same terminal, terminal-cover and phase separator kits used for the fixed circuit-breakers, using the proper adapter.
The fixed parts of a plug-in/withdrawable circuit-breaker can be installed at a distance of 50mm from the back of the panel or at 70mm as shown in the picture. Installation at 50mm is only compulsory in the case where rear vertical or horizontal terminals (HR/VR) are used.

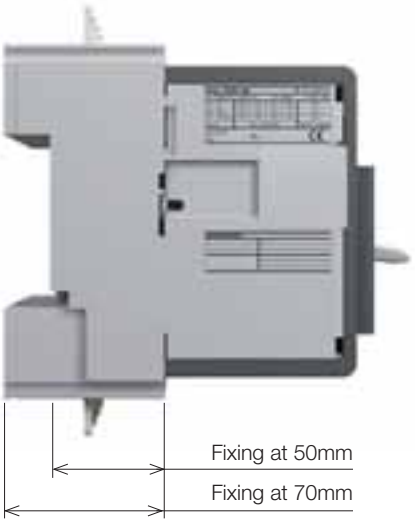

Conversion kits

Conversion kit for turning a fixed circuit-breaker into the moving part of a plug-in circuit-breaker

Conversion kit for turning a fixed circuit-breaker into the moving part of a withdrawable circuit-breaker

Conversion kit for turning a fixed part of plug-in version into the fixed part of a withdrawable version

The following conversion kits can be obtained in order to create the different versions:

- **Kit for converting the fixed circuit-breaker into the moving part of plug-in/withdrawable versions.** The conversion kit converts the fixed circuit-breaker into the moving part of plug-in/withdrawable versions. Only when withdrawable versions are made is it essential to order an accessory to apply to the front of the circuit-breaker so as to maintain the IP40 degree of protection over the entire isolation run. This accessory can be chosen from:
  - front for lever operating mechanism (FLD);
  - motor operator (MOE);
  - direct or transmitted rotary handle operating mechanisms (RHD or RHE).

  In the case where no accessory to be applied onto the front is indicated, the front for lever operating mechanism (FLD) is automatically included in the order.
- **kit for converting the fixed part of plug-in versions into the fixed part of withdrawable versions.** The kit comprises:
  - a guide for turning the fixed part of the plug-in circuit-breaker into the fixed part of the withdrawable circuit-breaker;
  - a racking-out rotary handle that allows the moving part to be inserted and withdrawn. The mechanism allows the circuit-breaker to be set to the isolated position (with the power and auxiliary circuits disconnected) with the compartment door closed, all to the advantage of operator safety. The rotary handle can only be inserted when the circuit-breaker is open. Once it has been removed or withdrawn, the circuit-breaker can be set to the open/closed position;
  - a flange for the compartment door, which replaces the one supplied with the fixed version of the circuit-breaker.
- **Kit for converting fixed type into the plug-in version for RC Sel residual current devices for XT2-XT4.** RC Sel four-pole residual current devices for XT2 e XT4 can be converted from the fixed version into the plug-in version using the special kit.
- **Kit for converting plug-in types into the withdrawable version for RC Sel residual current devices for XT2-XT4.** RC Sel four-pole residual current devices for XT2 and XT4 can be converted from the plug-in version to the withdrawable version using the special kit, which comprises a bellows to apply to the front of the residual current device so as to allow it and the residual current part to be withdrawn when the panel door is closed. This kit can also be assembled on fixed circuit-breakers fitted with the front part for locks or the direct rotary handle, thus adding to the range of uses for residual current devices.
  In the plug-in to withdrawable conversion kit, there is also a 6 pin connector to be applied onto the right side of the circuit-breaker to facilitate disconnection of the auxiliary circuits connected to the residual current device.
  This kit contains also the shunt opening release of the residual current device dedicated to the withdrawable version, which is fitted with a connector for the fixed part and the moving part.

Accessories

Versions and types

Plug-in version

Fixed part of plug-in + Fixed circuit-breaker + Conversion kit for turning a fixed circuit-breaker into the moving part of a plug-in circuit-breaker = **Plug-in circuit-breaker**

Withdrawable version

1st solution

Fixed part of withdrawable + Fixed circuit-breaker + Conversion kit for turning a fixed circuit-breaker into the moving part of a withdrawable circuit-breaker + Frontal accessory FLD[1] = **Withdrawable circuit-breaker**

2nd solution

Fixed part of plug-in + Conversion kit for turning a fixed part of plug-in version into the fixed part of a withdrawable version + Fixed circuit-breaker + Conversion kit for turning a fixed circuit-breaker into the moving part of a withdrawable circuit-breaker + Frontal accessory FLD[1] = **Withdrawable circuit-breaker**

[1] Frontal accessory mandatory. If not specified in the order, the FLD is supplied automatically

Mechanical Accessories		XT1	XT2	XT3	XT4
Terminals	F- Front	■	■	■	■
	EF - Front extended	■	■	■	■
	ES - Front extended spread	■	■	■	■
	FCCu - Front for copper cables	■	■	■	■
	FCuAl - Front for copper/aluminium cables	■	■	■	■
	FB - For flexible busbars	■	■	■	■
	MC - Multi-cable	■	■	■	■
	R - Rear orientated	■	■	■	■
	EF - Extended front for the fixed part	■	■	■	■
	HR/VR - Horizontal rear / Vertical rear for fixed part	■	■	■	■
	HR for RC - for residual current release	■			
Rotary handle operating mechanism	RHD - Direct rotary handle	■	■	■	■
	RHE - Transmitted rotary handle	■	■	■	■
	RHE-LH - Wide transmitted rotary handle	■	■	■	■
	RHS - Side rotary handle	■	■	■	■
Front for lever operating mechanism	FLD - Front for locks		■		■
Locks on CB	Padlock device	■	■	■	■
	Key lock	■	■	■	■
Locks on handle	Key lock	■	■	■	■
Locks on FLD	Key lock		■		■
Locks on Motor Operator	Key lock	■	■	■	■
	Key lock against manual operation		■		■
Look for fixed part	Key lock		■		■
Rear interlock	Interlock	■	■	■	■
Bracket for DIN rail	Bracket	■	■	■	■

Consult the relative section for more details.

Connection terminals

Connection terminals allow the circuit-breaker to be connected to the system in the way most suited to the installation requirements. By and large they consist of:
- front terminals: for connecting cables or busbars directly from the front of the circuit-breaker;
- rear terminals: for installing circuit-breakers in segregated panels with rear access.

Where possible, the terminals have laser marking on the surface indicating the tightening torques for the correct isolation of cables and bars.

Fixed version

The part of the standard equipment, fixed version SACE Tmax XT circuit-breakers are supplied with front terminals (F). However, they can be fitted with the following types of terminals as accessories thanks to the special kits:
- extended front (EF);
- extended spread front (ES);
- front for copper/aluminium cables (FCCuAl). A pitch adapter must be applied to the terminal zone of the circuit-breaker to ensure that copper and aluminium cables with sections of up to 240mm^2 can be connected to all the circuit-breakers. The pitch adapter is automatically supplied when it is necessary (see table page 3/9);
- front for copper cables (FCCu);
- for flexible busbars (FB);
- multicable (MC);
- rear oriented (R).

Plug-in and withdrawable versions

Fixed part of plug-in and withdrawable version circuit-breakers are normally suplied with extended front terminals (EF) or horizontal/vertical rear terminals (HR/VR).
The terminals are factory-mounted in the horizontal position. In case of need, the Customer can easily rotate the terminals into the vertical position.

A fixed part with front terminals (EF) can be converted into a fixed part with rear terminals (HR/VR) by ordering the appropriate terminal kit. The fixed parts can also be fitted with the same types of terminals available on the fixed circuit-breaker after an adapter has been installed on the terminal zone of the fixed part itself. Consequently, the following types of connection terminals are also available for the fixed part:

- extended spread front (ES);
- for copper-aluminium cables (FCCuAl);
- for copper cables (FCCu);
- for flexible busbars (FB);
- multi-cable (MC).

The adapter reproduces the terminal zone of the fixed circuit-breaker. This means that fixed parts can also be equipped with the same terminal covers and phase separators as those used for fixed circuit-breakers.

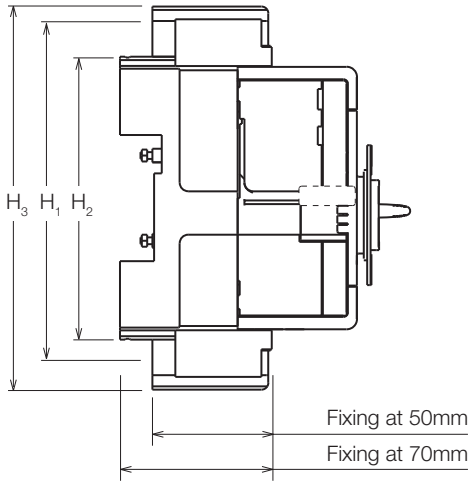

Fixed part adapter

Fixed part adapter

Circuit- breakers	H_1 fixed part [mm]	H_2 circuit-breaker [mm]	H_3 fixed part with two adapters [mm]
XT1	146	134	181
XT2	153	134	188
XT3	166	154	225
XT4	182	164	228

Front terminals - F

CB.	Vers.	Busbar dimensions [mm]						Cable terminals [mm]		Tightening		H Terminal covers [mm]			H Separators [mm]		
		W min	W max	H	Ø	D min	D max	W	Ø	Cable or busbar /Terminal		2	50	60	25	100	200
XT1	F	13	16	7.5	6.5	–	5	16	6.5	M6	6Nm	R	R	–	S	R	R
XT2	F	13	20	7.5	6.5	2.5	5	20	6.5	M6	6Nm	R	R	–	S	R	R
XT3	F	17	24	9.5	8.5	–	8	24	8.5	M8	8Nm	R	–	R	S	R	R
XT4	F	17	25	10	8.5	5	8	25	8.5	M8	8Nm	R	–	R	S	R	R

Front terminal - F

F terminal with cable lug

F terminal with busbar

Front extended terminals - EF

CB	Vers.	Busbar dimensions MAX [mm]			Cable terminals [mm]		Tightening				H Terminal covers [mm]			H Separators [mm]		
		W	D	Ø	W	Ø	Terminal /CB		Cable or busbar /Terminal		2	50	60	25	100	200
XT1	F	20	4	8.5	20	5	M6	6Nm	M8	9Nm	–	R	–	–	S	R
XT2	F	20	4	8.5	20	4	M6	6Nm	M8	9Nm	–	R	–	–	S	R
XT3	F	20	6	10	20	6	M8	8Nm	M10	18Nm	–	–	R	–	S	R
XT4	F	20	10	10	20	10	M8	8Nm	M10	18Nm	–	–	R	–	S	R

Front extended terminal - EF

EF terminal with cable lug

EF terminal with busbar

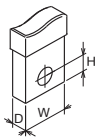

W Width
H Hole Heigth
D Depth

F Fixed
P Plug-in
W Withdrawable
Ø Diameter
S Standard
R On Request

Accessories

Mechanical Accessories

Front extended spread terminals - ES

CB	Vers.	Busbar dimensions MAX [mm]			Cable terminals [mm]		Tightening				H Terminal covers [mm]			H Separators [mm]		
		W	D	Ø	W	Ø	Terminal /CB		Cable or busbar /Terminal		2	50	60	25	100	200
XT1	F-P	25	4	8.5	25	8.5	M6	6Nm	M8	9Nm	–	–	–	–	–	S
XT2	F-P-W	30	4	10.5	30	10.5	M6	6Nm	M10	18Nm	–	–	–	–	–	S
XT3	F-P	30	4	10.5	30	10.5	M8	8Nm	M10	18Nm	–	–	–	–	–	S
XT4	F-P-W	30	6	10.5	30	10.5	M8	8Nm	M10	18Nm	–	–	–	–	–	S

Front extended spread terminal - ES

ES terminal with cable lug

ES terminal with busbar

Terminals for copper cables - FCCu

CB	Type of terminal	Vers.	Cable [mm²]		Tightening		L cable stripping [mm]	H Terminal covers [mm]			H Separators [mm]		
			Rigid	Flexible	Cable or busbar /Terminal			2	50	60	25	100	200
XT1	internal	F-P	1x1…70	1x1…50	12x12mm	7Nm	12	R	R	–	S[1]	R	R
	internal	F-P	–	2x2.5…35				R	R	–	S[1]	R	R
XT2	internal	F-P-W	1x1…95	1x1…70	14x14mm	7Nm	14	R	R	–	S[1]	R	R
	internal	F-P-W	–	2x1…50				R	R	–	S[1]	R	R
XT3	internal	F-P	1x6…185	1x6…150	18x18mm	10Nm	12	R	–	R	S[1]	R	R
	internal	F–P	–	2x6…70				R	–	R	S[1]	R	R
XT4	internal	F-P-W	1x6…185	1x6…150	18x18 mm	10Nm	12	R	–	R	S[1]	R	R
	internal	F-P-W	–	2x6…70				R	–	R	S[1]	R	R

[1] Phase separators supplied as standard with basic version circuit-breaker

FCCu terminal

FCCu terminal with cable

FCCu terminal with busbar

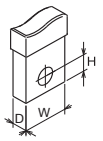

W Width
H Hole Heigth
D Depth

F Fixed
P Plug-in
W Withdrawable
Ø Diameter
S Standard
R On Request

Terminals for copper/aluminium cables - FC CuAl

CB	Type of terminal	Vers.	Cable [mm²]		Tightening				L cable stripping [mm]	H Terminal covers [mm]			H Separators [mm]		
			Rigid	Flexible	Terminal /CB		Cable or busbar /Terminal			2	50	60	25	100	200
XT1	internal	F-P	1x1.5…50	1x 1.5…50	M5	5Nm	Ø 9.5mm	7Nm	16	R	R	–	S	R	R
	external	F-P	1x35…95	NO	M6	6Nm	Ø 14mm	13.5Nm	16	–	S	–	–	–	–
	external(1)	F-P	1x150…240	NO	M6	6Nm	Ø 24mm	31Nm	24	ADAPTER					
XT2	internal	F-P-W	1x1…95	1x1…70	–	–	Ø 14mm	7Nm	14	–	R	–	S	R	R
	external(1)	F-P-W	1x150…240	NO	M6	6Nm	Ø 24mm	31Nm	24	ADAPTER					
	external(1)	F-P-W	1x70…185	NO	M6	6Nm	Ø 18mm	25Nm	20	–	S	–	–	–	–
	external(1)	F-P-W	2x35...95	NO	M6	6Nm	Ø 16mm	12Nm	18/33	–	–	S	–	–	–
XT3	internal	F-P	1x70…185	NO	–	–	Ø 18mm	16Nm	20	R	–	R	S	R	R
	external(1)	F-P	1x150…240	NO	M8	8Nm	Ø 24mm	31Nm	24	ADAPTER					
	external(1)	F-P	2x35…150	NO	M8	8Nm	Ø 18mm	16Nm	22/42	–	–	S	–	–	–
XT4	internal	F-P-W	1x1...150	1x1...150	–	–	Ø 17mm	10Nm	21	–	–	R	S	R	R
	external(1)	F-P-W	1x150…240	NO	M8	8Nm	Ø 24mm	31Nm	24	ADAPTER					
	external(1)	F-P-W	2x35…150	NO	M8	8Nm	Ø 18mm	16Nm	22/42	–	–	S	–	–	–

(1) Take-up auxiliary voltage device included

Internal FCCuAl terminal for copper/aluminium cables

Internal FCCuAl terminal for copper and aluminium cable with take-up of auxiliary voltage

External FCCuAl terminal for copper/aluminium cables

FCCuAl internal terminal with cable

FCCuAl external terminal with cables

Pitch adapter

Adaptor for FCCuAl terminals up to 240 mm²

Circuit-breaker	Poles	Dimensions [mm] [WxHxD]
XT1	3	105x50x68
	4	140x50x68
XT2	3	105x50x68
	4	140x50x68
XT3	3	105x50x68
	4	140x50x68
XT4	3	105x50x68
	4	140x50x68

Note: With XT1 and XT2 the adaptor increases the width of the circuit-breaker

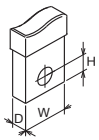

W Width
H Hole Heigth
D Depth

F Fixed
P Plug-in
W Withdrawable
Ø Diameter
S Standard
R On Request

Terminals for flexible busbars - FB

CB	Type of terminal	Vers.	Busbar dimensions MIN [mm]			Busbar dimensions MAX [mm]			Tightening [Nm]	H Terminal covers [mm]			H Separators [mm]		
			W	D	Nr	W	D	Nr	Cable or busbar /Terminal	2	50	60	25	100	200
XT1	internal	F-P	10	0.8	2	10	0.8	9	7Nm	R	R	–	S[1]	R	R
XT2	internal	F-P-W	10	0.8	2	10	0.8	9	7Nm	R	R	–	S[1]	R	R
XT3	internal	F-P	16	0.8	2	16	0.8	10	10Nm	R	–	R	S[1]	R	R
XT4	internal	F-P-W	16	0.8	2	16	0.8	10	10Nm	R	–	R	S[1]	R	R

[1] Phase separators supplied as standard with basic version circuit-breaker

Terminal for flexible busbars (FB)

FB terminal with flexible busbars

Multi-cable terminals - MC

CB	Vers.	Cable [mm²]		Tightening				L cable stripping [mm]	H Terminal covers [mm]			H Separators [mm]		
		Rigid	Flexible	Terminal /CB		Cable or busbar /terminal			2	50	60	25	100	200
XT1	F-P	6x2.5…35	6x2.5…25	M6	6Nm	Ø 8	7Nm	10, 20, 30	–	S	–	–	–	–
XT2	F-P-W	6x2.5…35	6x2.5…25	M6	6Nm	Ø 8	7Nm	10, 20, 30	–	S	–	–	–	–
XT3[1]	F-P	6x2.5…35	6x2.5…25	M8	8Nm	Ø 8	7Nm	15, 30	–	–	S	–	–	–
XT4[1]	F-P-W	6x2.5…35	6x2.5…25	M8	8Nm	Ø 8	7Nm	15, 30	–	–	S	–	–	–

[1] Take up auxiliary voltage device included

Multi-cable terminals (MC)

Multi-cable terminals with cables

Rear horizontal terminals - R

CB	Vers.	Busbar dimensions MAX [mm]				Tightening				H Terminal covers [mm]			H Separators [mm]		
		W	H	D	Ø	Terminal /CB		Cable or busbar /terminal		2	50	60	25	100	200
XT1	F	15	7.5	5	6.5	M5	5Nm	M6	6Nm	S	R	–	–	–	–
XT2	F	20	9	4	8.5	M6	6Nm	M8	9Nm	S	–	–	–	–	–
XT3	F	20	9	6	8.5	M8	8Nm	M8	9Nm	S	–	R	–	–	–
XT4	F	20	9	6	8.5	M8	8Nm	M8	9Nm	S	–	–	–	–	–

Rear horizontal terminals (R)

R terminal with horizontal busbar

R terminal with vertical busbar

Extended front terminals for fixed part - EF

CB	Vers.	Busbar dimensions MAX [mm]			Cable terminals [mm]		Tightening		Rear Separators [mm]
		W	P	Ø	W	Ø	Terminal/ CB	Cable or busbar /Terminal	90
XT1	P	20	4	8.5	20	8.5	6Nm	9Nm	R
XT2	P-W	20	4	8.5	20	8.5	6Nm	9Nm	R
XT3	P	20	6	8.5	20	8.5	6Nm	9Nm	R
XT4	P-W	20	10	8.5	20	8.5	6Nm	9Nm	R

EF terminals for fixed part

Rear flat horizontal terminals for fixed part - HR

CB	Vers.	Busbar dimensions MAX [mm]			Cable terminals [mm]		Tightening		Rear Separators [mm]
		W	P	Ø	W	Ø	Terminal /CB	Cable or busbar /Terminal	90
XT1	P	20	4	8.5	20	8.5	6Nm	9Nm	R
XT2	P-W	20	4	8.5	20	8.5	6Nm	9Nm	R
XT3	P	20	6	8.5	20	8.5	6Nm	9Nm	R
XT4	P-W	20	10	8.5	20	8.5	6Nm	9Nm	R

HR terminals for fixed part

Rear flat vertical terminals for fixed part - VR

CB	Vers.	Busbar dimensions MAX [mm]			Cable terminals [mm]		Tightening		Rear Separators [mm]
		W	P	Ø	W	Ø	Terminal /CB	Cable or busbar /Terminal	90
XT1	P	20	4	8.5	20	8.5	6Nm	9Nm	R
XT2	P-W	20	4	8.5	20	8.5	6Nm	9Nm	R
XT3	P	20	6	8.5	20	8.5	6Nm	9Nm	R
XT4	P-W	20	10	8.5	20	8.5	6Nm	9Nm	R

VR terminals for fixed part

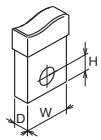

W Width
H Hole Heigth
D Depth

F Fixed
P Plug-in
W Withdrawable
Ø Diameter
S Standard
R On Request

Terminal covers

Phase separators

Sealable screws

Terminal covers, phase separators and sealable screws for terminal covers

Terminal covers are applied to the circuit-breaker to prevent accidental contact with live parts, thus providing protection against direct contacts. The terminal covers are pre-punched for know-out on the front to facilitate installation of busbars and/or cables, guaranteeing correct insulation.
The phase separator partitions increase the insulation characteristics between the phases on a level with the connections. They are mounted from the front, even when the circuit-breaker has already been installed, by inserting them into the corresponding slots.
The table lists the various different terminal covers and phase separators available for each SACE Tmax XT circuit-breaker. The terminal covers/phase separators able to guarantee adequate circuit-breaker installation and correct insulation are listed in the “Connection Terminals” section of the Accessories Chapter alongside each terminal.
The lead sealing kit consists of screws which, when applied to the terminal covers, prevent their removal, providing protection against direct contacts and tampering. The screws can be locked with wire and lead seals.
Each sealing kit consists of two screws. The maximum number of sealable screws that can be used for each circuit-breaker is given in the table below.

		XT1		XT2		XT3		XT4	
		3p	4p	3p	4p	3p	4p	3p	4p
HTC - High terminal covers	[mm]	50	50	50	50	60	60	60	60
LTC - Low terminal covers	[mm]	2	2	2	2	2	2	2	2
Max number sealable screws for each terminal cover	[No.]	1	2	1	1	1	2	1	1
Phase separator - low	[mm]	25	25	25	25	25	25	25	25
Phase separator - medium	[mm]	100	100	100	100	100	100	100	100
Phase separator - high	[mm]	200	200	200	200	200	200	200	200
Rear phase separator for FP	[mm]	90		90		90		90	

Rotary handle operating mechanism

Operating device that allows the circuit-breaker to be operated by means of a rotary handle, which makes the circuit-breaker easier to open and close thanks to its ergonomic handgrip.
Different types of handles are available:

- direct (RHD): installed directly on the front of the circuit-breaker. Allows it to be operated frontally;
- transmitted (RHE): installed on the panel door. Allows the circuit-breaker to be operated by means of a rod which acts on a base installed on the front of the circuit-breaker;
- lateral left (RHS-L) and lateral right (RHS-R): installed directly on the front of the circuit-breaker. Allows it to be operated from the side.

The wide handle grip (LH) only is also available, which can be combined with the transmitted handle (RHE) and with the lateral handle (RHS).

Direct rotary handle (RHD)

Transmitted rotary handle (RHE)

(LH) Handle grip

(RHS) Lateral handle

All rotary handles are available in two versions:
- standard: grey colour;
- emergency: red on a yellow background. Suitable for operating machine tools.

Rotary handles can be ordered:
- by specifying one single sales code (for RHD, RHE, RHE LH, RHS L/R);
- by indicating the following three devices (only for RHE):
  - rotary handle on compartment door with normal standard handgrip (RHE_H) or emergency handgrip (RHE_H_EM);
  - 500mm transmission rod (RHE_S). The minimum and maximum distances between the fixing plate and the door are 60.5mm and 470.5mm;
  - base on the circuit-breaker to fix to the circuit-breaker (RHE_B).

Use of the rotary handle is an alternative to the motor operator and to all accessories of the front type.
The rotary handles can be locked by means of a vast range of key locks and padlocks (consult the “locks” section of the Accessories chapter).
The direct and transmitted rotary operating mechanisms allow early contacts to be used on closing so as to supply the undervoltage release in advance of circuit-breaker closing (consult the “early auxiliary contacts” section of the Accessories chapter).

IP54 protection

IP54 Protection

Device which can be applied onto the transmitted rotary and lateral handle allowing IP54 degree of protection(G.1.11) to be achieved.

Front for locks

Front for operating lever mechanism

This device can be installed on the front of the circuit-breaker and allows it to be locked with key locks and padlocks.
The front for lever operating mechanism can only be installed on XT2 and XT4 three-pole and four-pole circuit-breakers. The front for lever operating mechanism can be fitted with a vast range of key locks and padlocks (see the “locks” section of the Accessories chapter).

Locks

Key lock

Fixed padlock in open position

Padlocks or key locks that prevent the circuit-breaker from being closed and/or opened. They can be fitted:

- directly on the front of the circuit-breaker;
- on the rotary handle operating mechanism;
- on the front for lever operating mechanism;
- on the motor;
- to the fixed and withdrawable part, to prevent the moving part from being inserted;
- on the front of the thermomagnetic trip unit, to prevent the adjuster of the thermal part from being tampered with.

All locks that hold the circuit-breaker in the open position ensure circuit isolation in accordance with the IEC 60947-2 Standard. In the closed position, the locks do not prevent the mechanism from releasing after a fault or remote control.

Fixed padlock in open/closed position

Removable padlock in open position

Key lock/padlock for withdrawable fixed part

Circuit-breaker with removable padlock in open position

Circuit-breaker with fixed padlock in open position

Circuit-breaker with fixed padlock in open/close position

RHD with key lock

RHE with key lock

FLD with key lock

MOD with key lock

MOE with key lock

Withdrawable fixed part with key lock/padlock

Type of lock		Circuit-breaker	Optional/ Standard supply	Position of circuit-breaker lock	Type of lock	Removability of key
Circuit-breaker	PLL Fixed padlock device	XT1…XT4	Optional	OPEN / CLOSED	padlocks max 3 padlocks Ø 7mm stem (not supplied)	–
		XT1…XT4	Optional	OPEN	padlocks max 3 padlocks Ø 7mm stem (not supplied)	–
	PLL Removable padlock device	XT1, XT3	Optional	OPEN	padlocks max 3 padlocks Ø 7mm stem (not supplied)	–
	KLC Key lock[5]	XT1…XT4	Optional	OPEN	Ronis Same key (A, B, C, D type)	OPEN
		XT1…XT4	Optional	OPEN	Ronis Different key	OPEN
		XT1…XT4	Optional	OPEN	Ronis Same key	OPEN / CLOSED
Rotary handle (RHD/RHE/ RHE-LH/ RHS)	RHL Key lock[1]	XT1…XT4	Optional	OPEN	Ronis Same key	OPEN
		XT1…XT4	Optional	OPEN	Ronis Different key	OPEN
		XT1…XT4	Optional	OPEN / CLOSED	Ronis Different key	OPEN / CLOSED
	Padlock device	XT1…XT4	Standard	OPEN	padlocks max 3 padlocks Ø 6mm stem (not supplied)	–
	Door lock[4]	XT1…XT4	Standard	DOOR LOCKED WHEN CIRCUIT-BREAKER CLOSED	–	–
Frontal for operating lever (FLD)	Padlock device	XT2, XT4	Standard	OPEN	padlocks max 3 padlocks Ø 6mm stem (not supplied)	–
	Door lock	XT2, XT4	Standard	DOOR LOCKED WHEN CIRCUIT-BREAKER CLOSED	–	–
	RHL Key lock[1]	XT2, XT4	Optional	OPEN	Ronis Same key	OPEN
		XT2, XT4	Optional	OPEN	Ronis Different key	OPEN
		XT2, XT4	Optional	OPEN / CLOSED	Ronis Different key	OPEN / CLOSED
	Padlock device	XT1…XT4	Standard	OPEN	padlocks max 3 padlocks Ø 8mm stem (not supplied)	–
Motor (MOD, MOE, MOE-E)	Key lock on motor MOL-D MOL-S	XT1…XT4	Optional	OPEN	Ronis Different keys	OPEN
		XT1…XT4	Optional	OPEN	Ronis Same keys	OPEN
	Key lock against manual operation MOL-M[2]	XT1…XT4	Optional	MANUAL	Ronis key	WITH LOCK INSERTED
Fixed part of withdrawable	KLF-FP Key lock / padlock for fixed part of withdrawable device	XT2, XT4	Optional	Key WITHDRAWN / INSERTED Padlock WITHDRAWN	Ronis key Different + padlocks max 3 padlocks Ø 6mm stem (not supplied)	–
		XT2, XT4	Optional	Key WITHDRAWN / INSERTED Padlock WITHDRAWN	Ronis key Same + padlocks max 3 padlocks Ø 6mm stem (not supplied)	–
		XT2, XT4	Optional	Key WITHDRAWN / INSERTED Padlock WITHDRAWN	Giussani key Different + padlocks max 3 padlocks Ø 6mm stem (not supplied)	–
		XT2, XT4	Optional	Key WITHDRAWN / INSERTED Padlock WITHDRAWN	Giussani key Same + padlocks max 3 padlocks Ø 6mm stem (not supplied)	–
Trip unit	Lock of thermal regulation[3]	XT1, XT3	Optional	–	–	–
		XT2, XT4	Standard	–	–	–

(1) On the transmitted rotary handle (RHE), the lock is mounted on the base. The key lock is not available on the lateral handle (RHS).
(2) Only for MOE and MOE-E.
(3) Applied to the cover of the circuit-breakers on a level with the regulator of the thermal element of thermomagnetic release TMD and prevents it from being tampered with.
(4) This function can be totally inhibited by the customer when the handle is assembled by means of a simple operation that can be reversed if needed.
Moreover, if the door lock function is not disabled by the customer during the assembly phase, the door lock can be temporarily deactivated with a tool in exceptional cases, so that the door can be opened without opening the circuit-breaker.
(5) Incompatible with electrical accessories mounted in the third pole.

Interlock

Rear mechanical interlock

Support, designed for installation on the rear of two circuit-breakers to be interlocked, and which, by means of linkages, prevents the two circuit-breakers it is installed on from closing simultaneously. The circuit-breakers in the Tmax XT family are interlocked two-by-two (IO-OI-OO) by means of a chassis and special plates. Interlocked circuit-breakers can be in fixed, plug-in or withdrawable version. Both circuit-breakers and switch-disconnectors in the three-pole and four-pole versions can be interlocked.

The acceptable combinations are:
- XT1-XT1
- XT1-XT3
- XT2-XT4
- XT2-XT2
- XT3-XT3
- XT4-XT4.

The following equipment must be ordered to make the rear interlock:
- a vertical or horizontal chassis;
- a plate for each circuit-breaker to be interlocked.

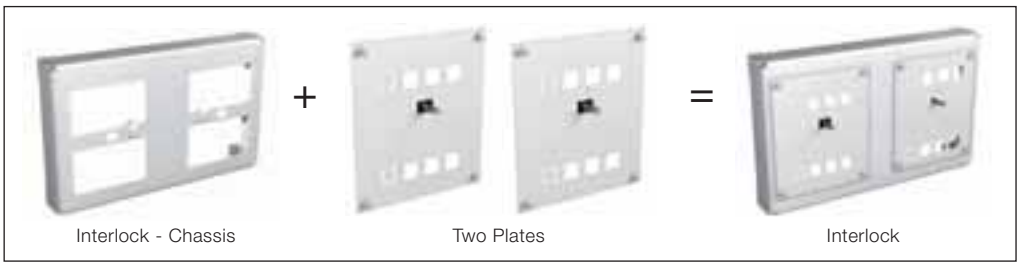

Bracket for fixing on DIN rail

Bracket for fixing on DIN rail

Support designed for installation on the back of the circuit-breakers to simplify assembly on standardized DIN EN 50022 rail.
The following can be installed on DIN EN 50022 rail:
- all Tmax XT circuit-breakers in the fixed three-pole or four-pole versions;
- XT1, XT3 circuit-breakers equipped with RC Sel 200; RC Inst, RC Sel for XT1 and XT3 residual current releases.

Flanges

XT1-XT3 circuit-breaker
with standard flange

Plastic plate that acts as an interface between the circuit-breaker and the hole in the panel door. All the Tmax XT series flanges are newly designed and do not require screws for installation. Flanges are applied:
- around the front part of the fixed/plug-in circuit-breaker (standard supply with the circuit-breaker);
- around the operating lever for all fixed/plug-in/withdrawable version circuit-breakers (optional);
- around the MOD or MOE motor operator (standard supply with MOD and MOE);
- around the front for FLD locks (standard supply with FLD);
- around the direct rotary handle operating mechanism (standard supply with RHD);
- around the transmitted rotary handle operating mechanism (standard supply with RHE);
- around the RC Inst, RC Sel for XT1 and XT3, RC Sel for XT2 and XT4 residual current release (standard supply with residual current devices).

XT2-XT4 circuit-breaker
with standard flange

Circuit-breaker with
optional flange

Rotary handle
with flange

MOE
with flange

MOD
with flange

Accessories

Electrical Accessories

Electrical Accessories		XT1	XT2	XT3	XT4
Shunt opening release	SOR	■	■	■	■
Permanent shunt opening release	PS-SOR	■	■	■	■
Undervoltage release	UVR	■	■	■	■
Time-delay device for undervoltage release	UVD	■	■	■	■
Auxiliary contacts Q: open/close signalling contact SY: trip signalling contact S51: electronic trip signalling contact	1Q 1SY 24V DC	■	■	■	■
	3Q 1SY 24V DC	–	■	■	■
	1S51 24V DC	–	■	–	■
	1Q 1SY 250V AC/DC	■	■	■	■
	2Q 2SY 1S51 250V AC/DC	–	■	–	■
	3Q 2SY 250V AC/DC	–	■	–	■
	3Q 1SY 250V AC/DC	–	■	■	■
	1S51 250V AC/DC	–	■	–	■
	2Q 1SY 250V AC/DC	■	■	■	■
	3Q on left 250V AC/DC	■	■	■	■
	400V 1Q 1SY 400V AC	–	■	–	■
	400V 2Q 400V AC	–	■	–	■
Position contacts	AUP-Racked-in	■	■	■	■
	AUP-Racked-out	–	■	–	■
Early auxiliary contacts	AUE-In handle	■	■	■	■
	AUE-Internal	–	■	–	■
Motor operator	MOD	■	–	■	–
	MOE	–	■	–	■
	MOE-E	–	■	–	■
Residual current devices	RC Inst	■	–	■	–
	RC Sel 200	■	–	–	–
	RC Sel for XT1 XT3	■	–	■	–
	RC Sel for XT2 XT4	–	■	–	■
	RC Sel B Type	–	–	■	–

Cabled SOR - PS SOR - UVR

Cabled SOR - PS SOR - UVR
for withdrawable circuit-breaker

Uncabled
SOR - PS SOR - UVR

Service releases

Shunt opening release (SOR). Allows the circuit-breaker to be opened by means of a non-permanent electrical control. Release operation is guaranteed for voltage between 70% and 110% of the rated power supply voltage Un, in both alternating and direct current. SOR is equipped with a built-in limit contact to shut-off the power supply in the open position with the relay tripped.
A remote controlled emergency opening command can be created by connecting an opening button to the SOR.

Shunt opening release with permanent service (PS-SOR), unlike SOR, this version can be continuously powered. The power input of PS SOR is much lower than the power input of SOR.

Undervoltage release (UVR). Allows the circuit-breaker to open when the release is subjected to either a power failure or voltage drop. Opening, as prescribed in the Standard, is guaranteed when the voltage is between 70% to 35% of Un. After tripping, the circuit-breaker can be closed again if the voltage exceeds the 85% of Un. When the undervoltage release is nor energized, neither the circuit-breaker nor the main contacts can be closed. A remote controlled emergency opening command can be created by connecting an opening button to the UVR.

None of the service releases in the Tmax XT series require screws for installation. They are extremely easy to fit. Just use slight pressure in the appropriate place. All service releases are available in two versions:

- cabled (AWG20 cable section -0.5mm^2 up to 300V, AWG17 - 1mm^2 up to 525V)):
  - for fixed/plug-in circuit-breakers with 1m long cables;
  - for withdrawable circuit-breakers with fixed part and moving part connector;
- not cabled:
  - for fixed/plug-in circuit-breakers with cables from 1.5 mm^2 in section.

In circuit-breakers:

- three-pole: as an alternative, SOR, PS-SOR or UVR can be installed in the slot on the left of the operating lever;
- four-pole: SOR, PS-SOR or UVR can be housed at the same time in the slot of the third and fourth pole. If the circuit-breaker is the withdrawable type, the connector for the fourth pole must be ordered to be able to install SOR, PS SOR and UVR in the fourth pole. If there is a residual current release, the opening solenoid (SA) of the residual current device must be installed in the slot of the third pole on the left of the operating lever.

SOR Electrical specifications

Version	Max power absorbed on inrush		Resistance	
	AC [VA]	DC [W]	Internal [ohm]	External [ohm]
12V DC		50	2,67	0
24-30V AC/DC	50	50	11	0
48-60V AC/DC	60	60	62	0
110...127V AC-110...125V DC	50	50	248	0
220...240V AC-220...250V DC	50	50	930	0
380-440V AC	55		2300	0
480-525V AC	55		5830	0

PS SOR Electrical specification

Version	Power absorbed during normal operation		Resistance	
	AC [VA]	DC [W]	Internal [ohm]	External [ohm]
24-30V AC/DC	6	6	162	0
48-60V AC/DC	4.5	4.5	586-930[1]	0
110...127V AC-110...125V DC	5	5	3720	0
220...240V AC-220...250V DC	5	5	13550	0
380-440V AC	7		20502	10000
480-525V AC	8.5		20502	15000

[1] The two different values refer to the minimum-maximum value of the voltage used

UVR Electrical specification

Version	Power absorbed during normal operation		Resistance	
	AC [VA]	DC [W]	Internal [ohm]	External [ohm]
24-30V AC/DC	1.5	1.5	399	0
48V AC/DC	1	1	1447	100
60V AC/DC	1	1	2405	100
110...127V AC-110...125V DC	2	2	8351	390
220...240V AC-220...250V DC	2.5	2.5	20502	9000
380-440V AC	3		20502	39000
480-525V AC	4		20502	59000

Time delay device for undervoltage release

Time delay device for undervoltage release (UVD)

The undervoltage release (UVD) can be combined with an external electronic power supply time delay which allows circuit-breaker opening to be delayed with preset and adjustable timing if the power supply voltage of the release either drops or fails, thus preventing untimely tripping caused by temporary faults. The time delay must be used with the undervoltage release (UVR) of the corresponding voltage.
A remote control positive safety opening command can be created by connecting an opening pushbutton to the UVR combined with the UVD.

UVD - Electrical specifications	
Power supply Voltage [V]	24...30V AC/DC
	48...60V AC/DC
	110...125V AC/DC
	220...250V AC/DC
Settable delay [s]	0.25 - 0.5 - 0.75 - 1 - 1.25 - 2 - 2.5 - 3
Opening time tolerance	±15%

Auxiliary contacts

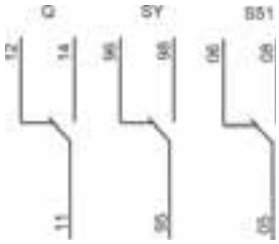

Contacts which allow information about the operating state of the circuit-breaker to be routed outside the circuit-breaker. The following information is available:

- open/closed: indication of the position of the circuit-breaker power contacts (Q);
- trip: signalling circuit-breaker opening due to the current release tripping (owing to overload or short-circuit), the residual current device, the opening or undervoltage releases, the emergency opening pushbutton of the motor operator, or owing to use of the test button (SY);
- trip unit tripping: indicates that one of the protection functions of the electronic or thermomagnetic trip unit has tripped (S51).

Changeover of auxiliary contacts Q (open/closed), SY (Relay tripped) and S51 (trip unit tripping)				
Normal sequence	CB Open	Q=12	SY=96	S51=06
	CB Closed	Q=14	SY=96	S51=06
Trip Sequence (trip caused by: - SOR, - UVR, - Trip Test)	CB Open	Q=12	SY=96	S51=06
	CB Closed	Q=14	SY=96	S51=06
	CB Trips	Q=12	SY=98	S51=06
	CB Resets	Q=12	SY=96	S51=06
Trip Sequence (trip caused by trip unit)	CB Open	Q=12	SY=96	S51=06
	CB Closed	Q=14	SY=96	S51=06
	CB Trips	Q=12	SY=98	S51=08
	CB Resets	Q=12	SY=96	S51=06

Cabled auxiliary contact

Not cabled auxiliary contact

Cabled auxiliary contact for withdrawable circuit-breaker

24V DC and 250V AC/DC auxiliary contacts

250V AC/DC and 24VAC/ DC auxiliary contacts are installed without the need for any screws. They are extremely easy to fit. Simply use slight pressure in the appropriate place. The following versions of auxiliary contacts are available:

- cabled (AWG20 cable section -0.5mm^2):
  - for fixed/plug-in circuit-breakers with 1m long cables;
  - for withdrawable circuit-breakers with fixed part and moving part connector;
- not cabled:
  - for fixed/plug-in circuit-breakers with cables from 0.5 up to 1.5 mm^2 in section.

Auxiliary contacts are supplied for each circuit-breaker in the SACE XT family in various different combinations, as shown in the table. The following items can be ordered to make installation even more flexible:

- a non-cabled auxiliary contact can create different signals (Q or SY) as the position of the circuit-breaker it is installed in varies;
- a non-cabled S51 auxiliary contact, which can be used for XT2 and XT4 circuit-breakers;
- a cabled auxiliary contact, with non numerates cables. Changing the placement in circuit-breaker, it's possible to obtain different signals (Q or SY).

Combinations	XT1	XT2	XT3	XT4
	3/4p	3/4p	3/4p	3/4p
1Q 1SY 24V DC	F-P	F-P-W	F-P	F-P-W
3Q 1SY 24V DC	–	F-P-W	F-P	F-P-W
1S51 24V DC	–	F-P-W	–	F-P-W
1Q 1SY 250V AC/DC	F-P	F-P-W	F-P	F-P-W
2Q 2SY 1S51 250V AC/DC	–	F-P-W	–	F-P-W
3Q 2SY 250V AC/DC	–	F-P-W	–	F-P-W
3Q 1SY 250V AC/DC	–	F-P-W	F-P	F-P-W
1S51 250V AC/DC	–	F-P-W	–	F-P-W
2Q 1SY 250V AC/DC	F-P	F-P	F-P	F-P
3Q on the left 250V AC/DC	F-P	F-P	F-P	F-P

F = Fixed, P = Plug-in, W = Withdrawable

Auxiliary contacts 24V DC - 250V AC/DC

	Circuit-breaker 3p	Circuit-breaker 4p
XT1	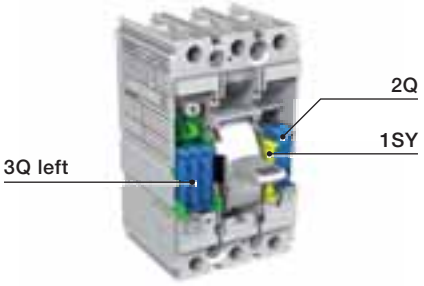	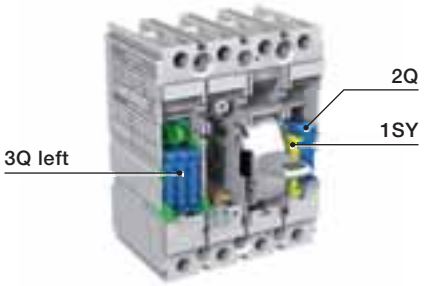
XT3	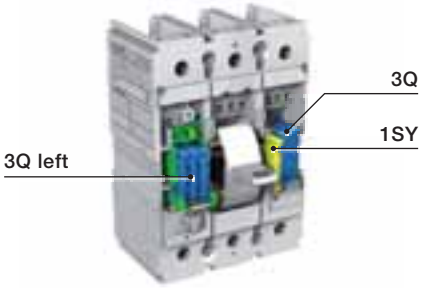	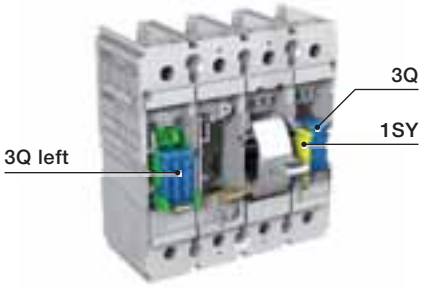
XT2 XT4	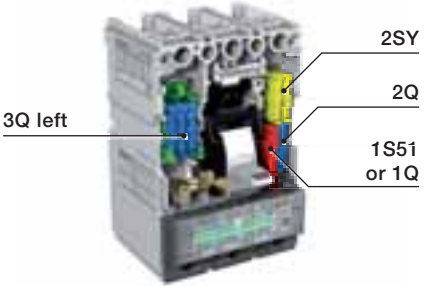	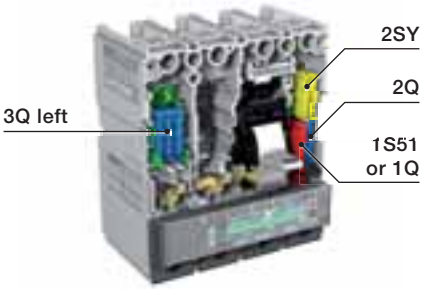

AUX 250V AC/DC - Electrical specifications

Power supply Voltage [V]	Class of use	Operating current [A]	
		AC	DC
110 AC/DC	DC-12	–	0.5
	DC-14	–	0.05
125 AC/DC	AC-12, AC-13, AC-14	6	–
	AC-15	5	–
250 AC/DC	AC-12 and DC-12	6	0.3
	AC-13	6	–
	AC-14 and DC-14	5	0.03
	AC-15	4	–

AUX 24V DC - Electrical specifications

Power supply Voltage [V]	Operating current [A]
	DC
5 DC	0.01
24 DC	0.1

Cabled auxiliary contact

Cabled auxiliary contact for withdrawable circuit-breaker

400V AC auxiliary contacts

400V AC auxiliary contacts are only available for XT2 and XT4 circuit-breakers in the following versions:

- cabled (AWG17 cable section -1mm^2):
  - for fixed/plug-in circuit-breakers with 1m long cables;
  - for withdrawable circuit-breakers with fixed part and moving part connector.

The 400 V auxiliary contacts take up the whole right-hand slot of the circuit-breaker.

Combinations	XT1	XT2	XT3	XT4
	3/4p	3/4p	3/4p	3/4p
1Q 1SY 400V	–	F-P-W	–	F-P-W
2Q 400V	–	F-P-W	–	F-P-W

F = Fixed, P = Plug-in, W = Withdrawable

Auxiliary contacts 400V AC

	Circuit-breaker 3p	Circuit-breaker 4p
XT2 XT4		

AUX 400V AC - Electrical specifications

Power supply Voltage [V]	Operating current [A]	
	AC	DC
125 AC/DC	–	0.5
250 AC/DC	12	0.3
400 AC/DC	3	–

Auxiliary position contact

Auxiliary position contacts - AUP

These allow information about the position of the circuit-breaker in relation to the fixed part of plug-in or withdrawable versions to be routed outside the circuit-breaker itself.
Two types of position contact (AUP) are available, at 250V AC/DC and 24V AC/DC:

- racked-in contact for all plug-in and withdrawable SACE Tmax XT circuit-breakers, to be positioned in the fixed part;
- racked-out contact for all withdrawable SACE Tmax XT2 and XT4 circuit-breakers, to be installed in the side part of the withdrawable version.

For further details about the electrical specifications of the contacts, consult the “24V DC and 250V AC contacts” section of the Accessories chapter.

Circuit-breaker		N° racked-in contact	N° rcked-out contact
XT1	3/4 poles	4	–
XT2	3 poles	2	2
	4 poles	4	
XT3	3/4 poles	4	–
XT4	3/4 poles	4	2

Plug-in circuit-breaker with racked in contact

Racked-in signal ON

Racked-in signal OFF

Withdrawable circuit-breaker with racked in - racked out contacts

Racked-in signal ON
Racked-out signal OFF

Racked-in signal OFF
Racked-out signal OFF

Racked-in signal OFF
Racked-out signal ON

Early auxiliary contacts in the handle

Early auxiliary contacts inside the circuit-breaker and connector

Early auxiliary contacts - AUE

Early contacts in relation to **closing**: allow the undervoltage release to be supplied before the main contacts close, in accordance with the IEC 60204-1, VDE 0113 Standards.
Early contacts in relation to **opening**: allow any electronic devices connected to the system that could be damaged owing to overvoltages generated by the circuit-breaker opening operation to be disconnected in advance.
The early opening/closing auxiliary contacts can be:

- installed inside the direct and transmitted rotary handle operating mechanisms for all the SACE Tmax XT family circuit-breakers (max two contacts @ 400V):
  - in the cabled version with 1m long cables (AWG20 cable sections);
  - a dedicated code is available in the withdrawable version which includes the connector for the moving part and fixed part;
- installed in the three-pole and four-pole fixed version SACE Tmax XT2 and XT4 circuit-breakers (max two 250V auxiliary contacts). In the four-pole version the early opening/closing contacts are inserted in the slot of the third pole. This type of early contact is supplied with a back clamping to be installed on the left-hand side of the circuit-breaker to facilitate wiring operations (AWG20 cable diameters). Opening/closing contacts in the circuit-breaker excludes use of the four-pole RC Sel release.

For further details about the electrical specifications of the contacts, consult the “400V DC and 250V AC contacts” section of the Accessories chapter.

Motor operators

Devices that allow circuit-breaker opening and closing to be controlled:
- in the remote mode, by means of electric controls;
- locally directly from the front, by means of a special mechanisms.

Direct action motor operator (MOD)

MOD direct action motor operator

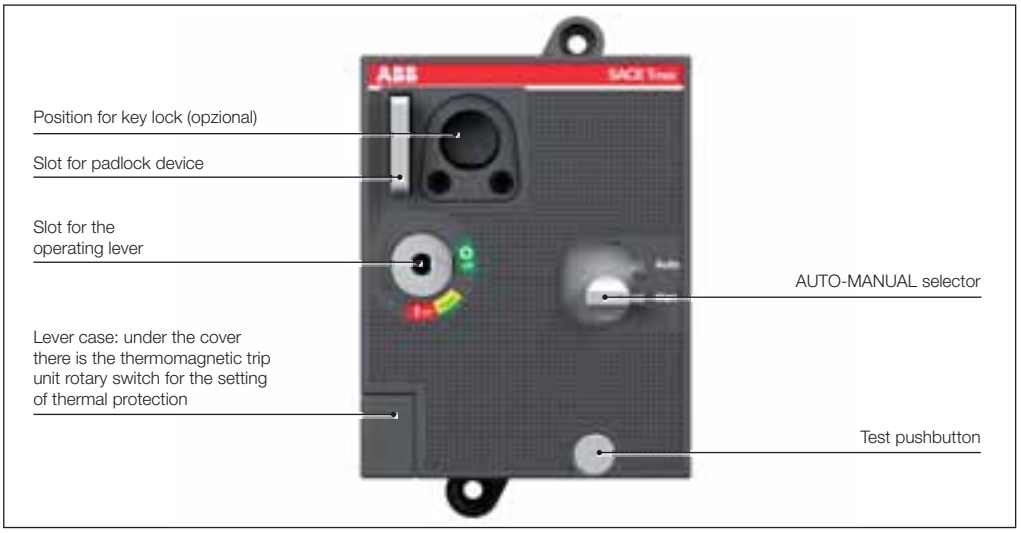

The direct action motor control available for XT1 and XT3, is supplied:
- complete with 1m long cables;
- with flange, to replace the standard one supplied with the circuit-breaker;
- with padlock device, only removable when the motor is in the open position. The padlock device accepts up to three 8 mm padlocks;
- auxiliary contacts (AU-MO) which allow the motor control mode (manual or auto) signal to be routed outside;
- (on request) the motor operator can be fitted with a key lock (consult the “locks” section in the Accessories chapter).

Operating principles:

- a selector on the front of the MOD, is used for selecting the operating mode:
  - AUTO: when the selector is in this position, circuit-breaker closing can only take place remotely by means of an electric impulse, whereas opening is allowed both remotely and from the front of the motor;
  - MANUAL: when the selector is in this position, the circuit-breaker can only be opened/closed from the front of the motor by means of the relative lever housed in a slot made in the motor itself;
- operation of the motor operator via remote control is also guaranteed by permanent electrical opening/closing impulses;
- the resetting modes shown in the diagrams below depend on the reset wiring diagram chosen by the customer (consult the reset wiring diagrams in the “Electric Diagrams”) chapter.

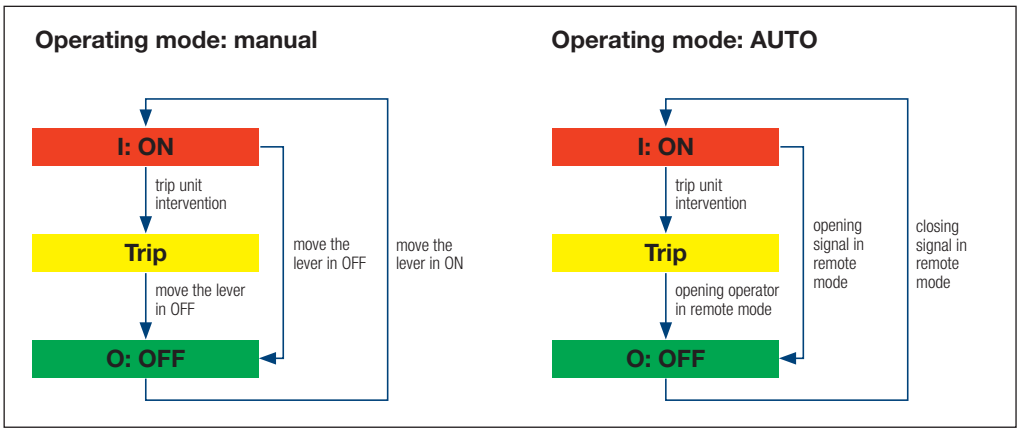

Stored energy motor operators (MOE)

Stored energy motor operators - MOE and MOE-E

The MOE or MOE-E stored energy motor operator available for XT2 and XT4 is supplied:

- complete with 1m long cables;
- complete with connector for the fixed part and moving part of withdrawable devices. If the motor operator is used with fixed or plug-in circuit-breakers, the connector can be easily removed;
- with flange, to use instead of the standard one supplied with the circuit-breaker;
- with padlock device, only removable when the motor is in the open position. The padlock device accepts up to three 8mm padlocks;
- with lock of the AUTO-MANUAL selector;
- with auxiliary contacts (AUX-MO) that allow the motor’s control mode (manual or remote) signal to be routed outside;

- (on request) the motor operator can be equipped with key lock (consult the “locks” section in the Accessories chapter);
- (on request) the motor operator can be equipped with lock to safeguard against manual operation MOL-M (consult the “locks” section in the Accessories chapter).

Operating principles:

- a selector on the front of the MOE, is used for selecting the operating mode:
  - AUTO: when the selector is in this position, the pushbuttons on the front of the motor are locked. Circuit-breaker closing can only take place remotely by means of an electric impulse, whereas opening is allowed both remotely and from the front of the motor;
  - MANUAL: the circuit-breaker can only be opened/closed from the front of the motor using the relative pushbuttons;
  - LOCKED: when the selector is in this position, the circuit-breaker is in the open position. The padlock device can be withdrawn and the motor locked in the open position;
- operation of the motor operator via remote control is also guaranteed by permanent electrical opening/closing impulses. Once an opening command has been given, the next closing command (permanent) is taken over by the motor operator once opening has been completed. In the same way, an opening command is taken over once the previous closing operation has been completed;
- the resetting modes shown in the diagrams below depend on the reset wiring diagram chosen by the customer (consult the reset wiring diagrams in the “Electric Diagrams”) chapter.

If the electronic trip unit Ekip LSI, Ekip LSIG or Ekip M-LRIU with Ekip Com module is used, motor operator MOE-E can be used instead of motor operator MOE.
MOE-E allows the digital signals from the supervision and monitoring system to be used by means of the release and Ekip Com contacts and to be converted into power signals for operating the motor operator. All the features described above for the MOE motor operator are also valid for the MOE-E version.

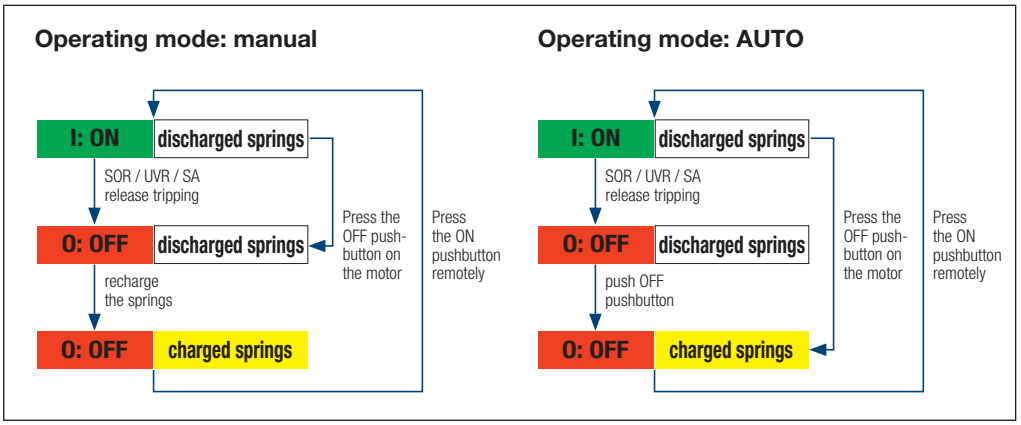

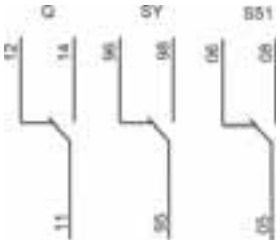

Changeover of auxiliary contacts Q (open/closed), SY (Relay tripped) and S51 (trip unit tripping)				
Circuit-breaker with MOE (MANUAL Mode)				
Normal sequence	CB Closed	Q=14	SY=96	S51=06
	By pressing the Red pushbutton, the CB trips	Q=12	SY=98	S51=06
	Charging the springs, CB opens	Q=12	SY=96	S51=06
	By pressing the Green pushbutton, the CB Closes	Q=14	SY=96	S51=06
Trip Sequence (trip caused by: - SOR, - UVR, - Trip Test)	CB Closed	Q=14	SY=96	S51=06
	CB trips	Q=12	SY=98	S51=06
	Charging the springs, CB opens	Q=12	SY=96	S51=06
	By pressing the Green pushbutton, the CB Closes	Q=14	SY=96	S51=06
Trip Sequence (trip caused by trip unit)	CB Closed	Q=14	SY=96	S51=06
	CB trips	Q=12	SY=98	S51=08
	Charging the springs, CB opens	Q=12	SY=96	S51=06
	By pressing the Green pushbutton, the CB Closes	Q=14	SY=96	S51=06
Circuit-breaker with MOE (AUTO Mode)				
Normal sequence	CB Closed	Q=14	SY=96	S51=06
	By pressing the Opening pushbutton remotely, the CB opens	Q=12	SY=98	S51=06
	By pressing the Closing pushbutton remotely, the CB Closes	Q=14	SY=96	S51=06
Trip Sequence (trip caused by: - SOR, - UVR, - Trip Test)	CB Closed	Q=14	SY=96	S51=06
	CB trips	Q=12	SY=98	S51=06
	By pressing the Opening pushbutton remotely, the CB opens	Q=12	SY=96	S51=06
	By pressing the Closing pushbutton remotely, the CB Closes	Q=14	SY=96	S51=06
Trip Sequence (trip caused by trip unit)	CB Closed	Q=14	SY=96	S51=06
	CB trips	Q=12	SY=98	S51=08
	By pressing the Opening pushbutton remotely, the CB opens	Q=12	SY=96	S51=06
	By pressing the Closing pushbutton remotely, the CB Closes	Q=14	SY=96	S51=06

Electrical specifications		MOD		MOE and MOE-E	
Rated voltage, Un	[V]	–	24 DC	–	24 DC
	[V]	–	48…60 DC	–	48…60 DC
	[V]	110…125 AC	110…125 DC	110…125 AC	110…125 DC
	[V]	220…250 AC	220…250 DC	220…250 AC	220…250 DC
	[V]	380...440 AC	–	380...440 AC	–
	[V]	480...525 AC	–	480...525 AC	–
Operating Voltage	[% Un]	MIN=85% Un; MAX=110% Un			
Power absorbed on inrush Ps	[VA - W]	≤ 500	≤ 500	≤ 300	≤ 300
Power absorbed in Pc service	[VA - W]	≤ 300	≤ 300	≤ 150	≤ 150
Operating frequency	[Hz]	50..60		50..60	
Duration [1]	opening [s]	< 0.1		< 1.5	
	closing [s]	< 0.1		< 0.1	
	reset [s]	< 0.1		< 3	
Mechanical life	[N° operations]	25000		25000	
Minimum duration of electrical opening and closing command	[ms]	≥ 150		≥ 150	

[1] Total time, from transmission of impulse to opening of circuit-breaker

Connectors for electrical accessories

Plug-in circuit-breaker

In the plug-in version of SACE Tmax XT circuit-breakers, the auxiliary circuits can be disconnected by means of two different types of adapter:

- plug and socket adapter to be fixed on the bottom of the panel: for XT1, XT2, XT3, XT4;
- plug and socket adapter installed on the rear of the circuit-breaker and in the fixed part of plug-in devices: for XT2, XT4.

Plug and socket adapters on the back of the panel

Plug and socket adapters on the back of the panel

To make it easier to connect/disconnect auxiliary circuits, wired electrical accessories can be connected to one or more plug and socket connectors to be installed on the back of the panel.
3, 6, 9 and 15 PIN connectors are available. The cables connect/disconnect to and from the connector in a fast and simple way without the aid of any dedicated tools.
Consider the number of cables of each electrical accessory when calculating the number of connectors required.

Accessory	Number of cables
SOR, PS-SOR, UVR, External Neutral, PTC	2
SA, 1 AUX	3
Auxiliary power supply 24V DC, AUE, PR212CI	4
MOE-E	5
Ekip Com, Residual current	6
MOE (with AUX-MO), MOD (with AUX-MO)	7

Plug and socket adapters installed on the rear of the circuit-breaker and in the fixed part

Only for the plug-in versions of Tmax XT2 and XT4 circuit-breakers, the auxiliary circuits can be automatically disconnected by means of an adapter installed on the rear of the circuit-breaker and in the fixed part of plug-in versions.
The 12 PIN connector can only be used with accessories that function at a voltage of not more than 250V AC/DC. The cables are connected to /disconnected from the connector in a fast and simple way without the aid of any dedicated tools. Wiring is to be carried out by the Customer.

Placed and socket adaptor placed on the back moving part

Plug and socket adaptor in the fixed part

Withdrawable circuit-breaker

Cabling of withdrawable version

When withdrawable circuit-breakers are used, the codes of the electrical accessories specifically designed for this version must be ordered. These dedicated codes contain the wired electrical accessory with connector for the moving part and for the fixed part to be inserted in the side of the fixed part. If the MOE motor operator is ordered, connectors for the fixed part and moving part are always supplied since there is no dedicated code for the withdrawable version.
The connectors of electrical accessories for withdrawable circuit-breakers must all be installed on the right side of the circuit-breaker in housings made in the side of the fixed part.
This type of connection allows the auxiliary circuits to be disconnected automatically when the circuit-breaker is withdrawn from the fixed part.
If the Customer wants to wire the fixed part in advance of the moving part, the fixed part mounting connectors can be ordered as spare parts.

Residual current releases

Both circuit-breakers and switch-disconnectors are pre-engineered for assembly combined with residual current releases.
Residual current circuit-breakers derived from the circuit-breaker are known as “mixed”, meaning that, besides protection against the typical overloads and short-circuits of circuit-breakers, they also provide protection for people and against earth fault currents, thus protecting against direct, indirect contacts and the risk of fires.
Residual current circuit-breakers derived from the switch-disconnector are “pure” residual current circuit-breakers, i.e. they only provide residual current protection and not the protections typical of circuit-breakers. “Pures” residual current circuit-breakers are only sensitive to earth fault current and are generally used as main switches in small panels for distribution to end users.
Use of “pure” and “mixed” residual current circuit-breakers allows the insulation state of the installation to be continuously monitored. It ensures efficient protection against the risks of fires and explosions and, in the case that detect fault at IΔn<30mA devices, also protects people against indirect and direct contacts, thereby integrating the compulsory measures established by the accident prevention standards and regulations.
The residual current releases comply with the following Standards:
- IEC 60947-2 annex B;
- IEC 61000: for protection against unwarranted tripping.

The table gives all the residual current devices which can be used with the Tmax XT family of circuit-breakers:

	XT1		XT2		XT3		XT4	
	3p	4p	3p	4p	3p	4p	3p	4p
RC Inst	F	F			F	F		
RC Sel XT1-XT3	F	F			F	F		
RC Sel 200		F						
Rc Sel XT2-XT4				F-P-W				F-P-W
RC B type						F		

F = Fixed, P = Plug-in, W = Withdrawable

All Tmax XT residual current devices:
- feature microprocessor technology and act directly on the circuit-breaker by means of a dedicated opening solenoid (supplied with the residual current release and also available as a spare part) which must be housed in the relative slot formed in the third pole are to the left of the operating lever;
- do not need an auxiliary supply as they are powered directly from the mains;
- can be supplied either from above or below;
- functionality is guaranteed even with a single phase plus neutral or just two live phases and in the presence of pulsating unidirectional currents with direct components (minimum auxiliary voltage PHASE-NEUTRAL 85 Vrms);
- all possible connection combinations are permitted, as long as the neutral connection to the first pole on the left in the four-pole version is guaranteed.

RC Sel 200 residual current releases (type A) XT1

Thanks to its low height, the RC Sel 200 residual current release can be installed in 200mm modules. Moreover, its special shape reduces the overall size of the installation if two or more units are to be installed side by side.

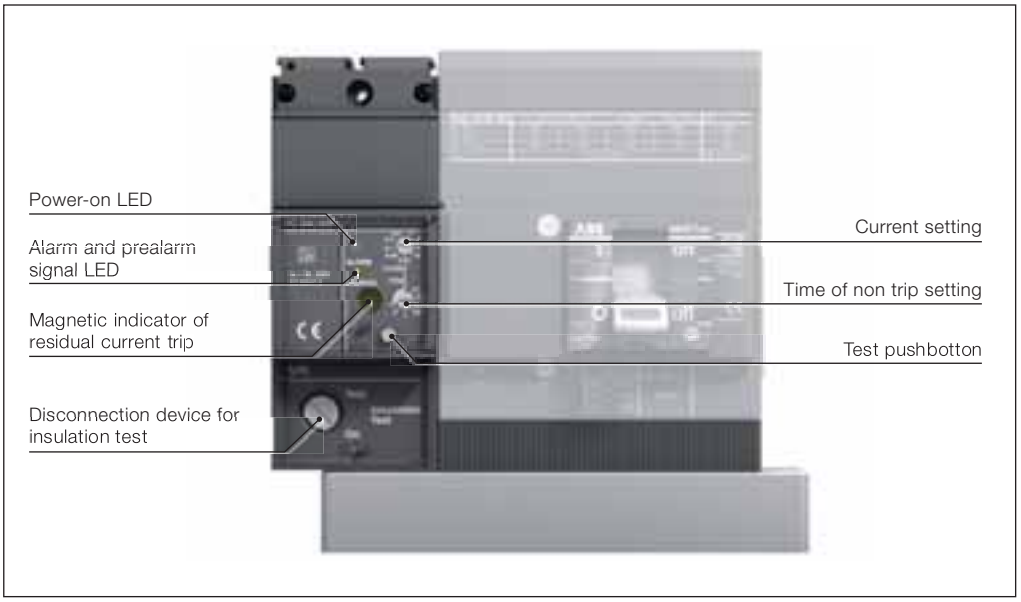

RC Inst. residual current releases for XT1 and XT3

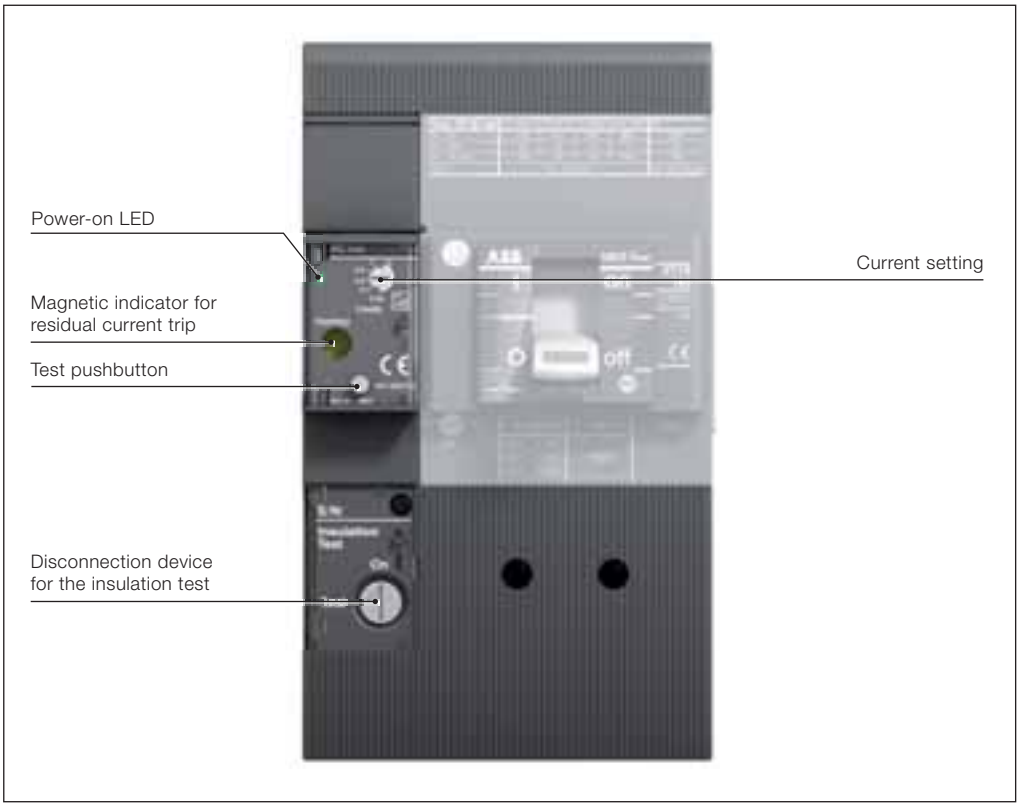

RC Inst, RC Sel residual current releases (type A) for XT1 and XT3

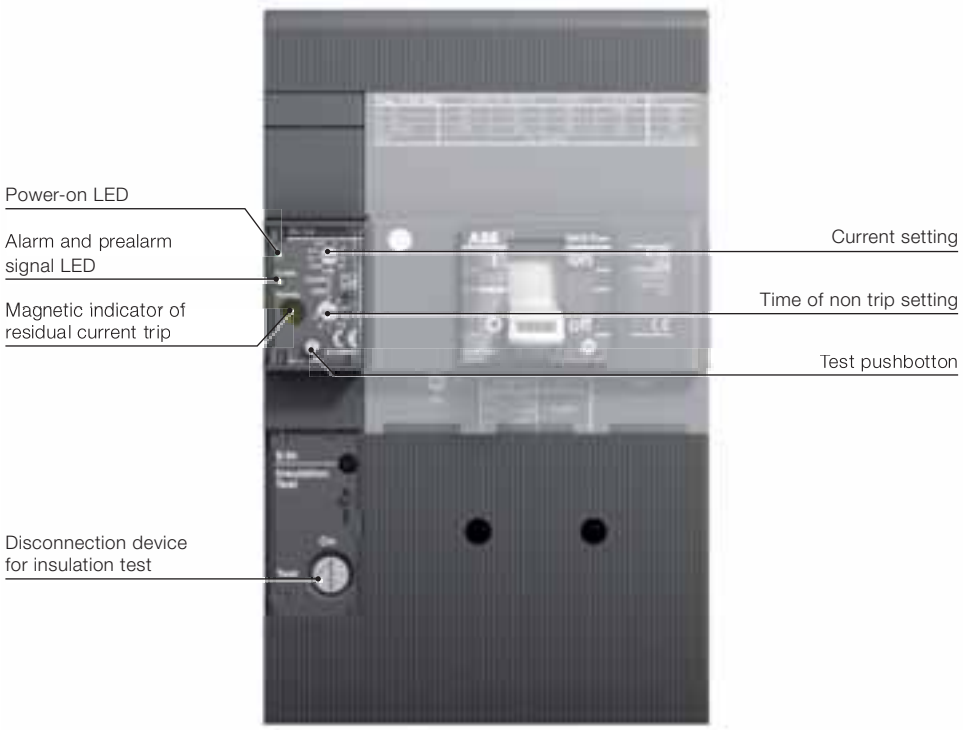

RC Sel residual current releases (type A) for XT2 and XT4

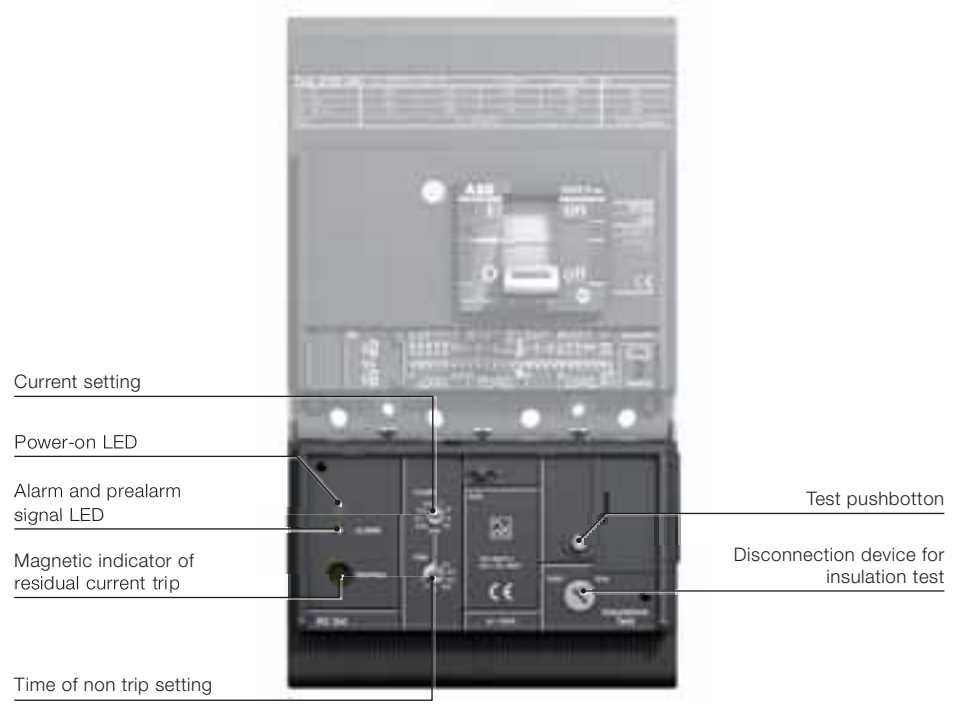

The fixed version of the RC Sel residual current release can easily be converted:

- into the plug-in type:
  - by ordering the kit for converting the residual current release from the fixed to the plug-in version;
- into the withdrawable type:
  - by ordering the kit for converting the residual current release from the plug-in to the withdrawable version. This kit contains the shunt opening release of the withdrawable residual current device to replace the shunt opening release supplied with the fixed version. The shunt opening release of the withdrawable residual current device contains both the connector for the moving part and the connector for the fixed part. The 160A frame with residual current withdrawable breaker can be used up to a maximum current of 135A, whereas the 250A frame can be used up to 210A.

With the RC Sel residual current release for XT2-XT4, it is possible to use the same terminals usable for the fixed circuit-breaker and for the fixed parts of plug-in and withdrawable circuit-breakers.

RC B Type residual current release (type B) for XT3

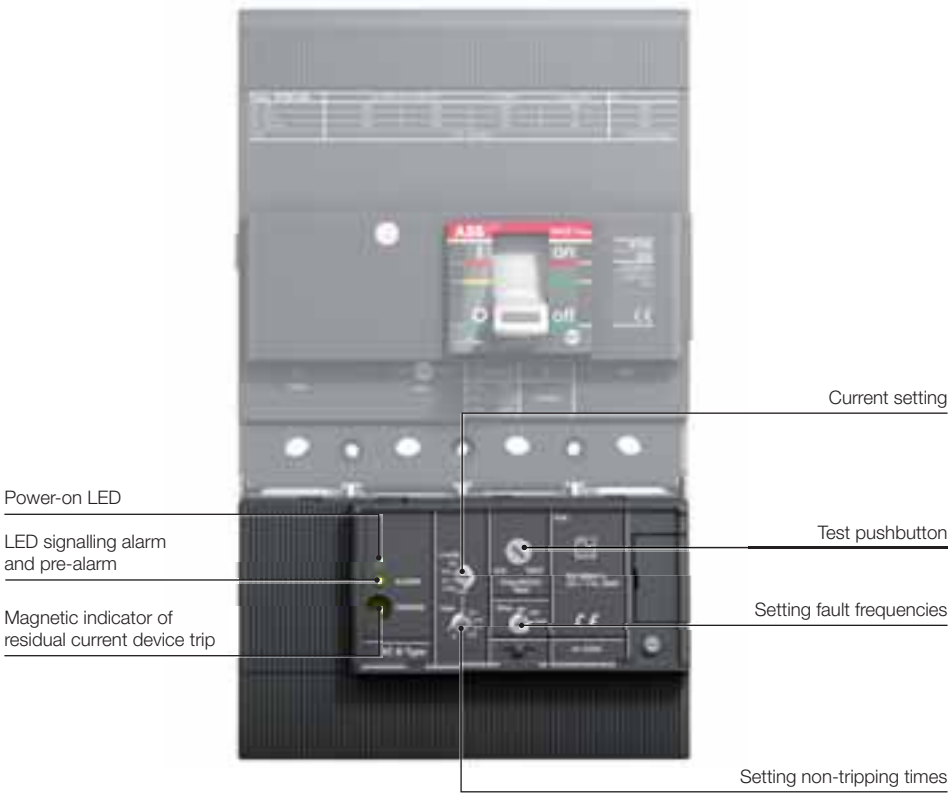

The RC B Type residual current release, to be used in conjunction with the XT3 circuit-breaker, has the following features:

- it complies with type B operation, which guarantees sensitivity to residual fault currents with alternating, pulsating alternating and direct current components (IEC 60947-1, IEC 60947-2 Annex B, IEC 60755);
- the maximum frequency band of the residual fault current can be selected (3 steps: 400 - 700 - 1000Hz). The residual current device can therefore be adapted to suit various industrial installation requirements according to the prospective fault frequencies generated on the load side of the release. Typical installations that may require different frequency thresholds from the standard ones (50 - 60Hz) are welding systems for the automobile industry (1000Hz), the textile industry (700Hz), airports and three-phase drives (400Hz).

Electrical characteristic	Residual current devices				
	RC Sel 200mm XT1	RC Inst XT1-XT3	RC Sel XT1-XT3	RC Sel XT2-XT4	RC B Type XT3
Primary power supply Voltage [V]	85…500	85…500	85…500	85…690	110…500
Operating frequency [Hz]	45…66	45…66	45…66	45…66	45…66
Fault frequency [Hz]	50-60	50-60	50-60	50-60	400-700-1000
Test operating range [V]	85…500	85…500	85…500	85…690	110…500
Rated operating current [A]	up to 160	XT1 up to 160 XT3 up to 250	up to 160 XT1 up to 250 XT3	up to 160 XT2[2] up to 250 XT4[2]	up to 225
Adjustable trip thresholds [A]	0.03-0.05-0.1-0.3 0.5-1-3-5-10	0.03-0.1-0.3 0.5-1-3	0.03-0.05-0.1-0.3 0.5-1-3-5-10	0.03-0.05-0.1-0.3 0.5-1-3-5-10	0.03-0.05-0.1 0.3-0.5-1
Selective type S	■	–	■	■	■
Adjustable NON-trip time settings [s] at 2xIΔn	instantaneous	instantaneous	instantaneous	instantaneous	instantaneous
	0.1-0.2-0.3- 0.5-1-2-3		0.1-0.2-0.3- 0.5-1-2-3	0.1-0.2-0.3- 0.5-1-2-3	0-0.1-0.2-0.3- 0.5-1-2-3
Power input	<10 W at 500V AC	<8 W at 500V AC	<10 W at 500V AC	<5 W at 500V AC	<10 W at 500V AC
Trip Coil with switch contact for trip signal	■	■	■	■	■
Input for remote controlled opening command	■	–	■	■	■
NO contact for pre-alarm signal	■	–	■	■	■
NO contact for alarm signal	■	–	■	■	■
Prealarm indication from 25% IΔn. Steady yellow Led light	■	–	■	■	■
Alarm timing indication at 75% IΔn. Flashing yellow Led light[1]	■	–	■	■	■
Type A for pulsating alternating current, Type AC for alternating current	■	■	■	■	■
Type B for pulsating current and direct current	–	–	–	–	■

[1] indication of alarm timing at 90% IΔn for 30mA
[2] withdrawable version: the 160 frame can be used with a max In = 135A
the 250 frame can be used with a max In = 210A

Toroid

SACE RCQ020/A panel type residual current release (type A)

Tmax circuit-breakers can also be used in conjunction with RCQ020 panel type residual current relays with separate toroid to be installed on the line conductors ("/A" letter show the necessity to have on auxiliary power supply).
Thanks to its wide range of settings, the panel relay is suitable for:

- applications where the installation conditions are particularly restrictive, such as circuit-breakers already installed or limited space in the circuit-breaker compartment;
- creating a residual current protection system coordinated at various distribution levels, from the main switchboard to the end user;
- where residual current protection with low sensitivity is required, e.g. in partial (current) or total (time) selective chains;
- highly sensitive applications (physiological sensitivity) for protecting people against direct contacts.

Thanks to the 115-230...415V external auxiliary power supply, the RCQ020 panel-type residual current device is able to detect current leakage from 30mA to 30A and to act with a trip time that can be adjusted from instantaneous to delayed by 5s. The opening mechanism is the indirect action type and acts on the circuit-breaker release mechanism by means of the shunt opening or undervoltage release of the circuit-breaker itself.
The opening command to the circuit-breaker (Trip delay) can be temporarily inhibited, and the circuit-breaker can be opened by remote control by means of the RCQ020 device.

The following equipment must be requested when ordering:

- the RCQ020 device;
- an opening coil (SOR) or an undervoltage release (UVR) of the circuit-breaker to be housed in the relative slot made in the left pole of the circuit-breaker itself;
- a closed toroid, that can be used for cables and busbars, chosen from amongst those available, with a diameter from 60mm to 185mm.

Signals available:

- LED to indicate the status of the residual current device (supplied or not supplied). RCQ02 is equipped with the positive safety function thanks to which the RCQ020 commands automatic circuit-breaker opening in the absence of auxiliary voltage;
- LED for signalling faults;
- LED for signalling tripping of the residual current device;
- pre-alarm/alarm/trip electrical signals.

RCQ020/A residual current release			
Power supply Voltage		AC [V]	115-230...415
Operating frequency		[Hz]	45÷66Hz
Inrush current	@115V AC		500mA for 50ms
	@230V AC		150mA for 50ms
	@415V AC		100mA for 50ms
Power input at full rate			2 [VA] / 2 [W]
Trip threshold adjustment IΔn		[A]	0.03-0.05-0.1-0.3-0.5-1-3-5-10-30
Trip time adjustment		[s]	instantaneous 0.1-0.2-0.3-0.5-0.7-1-2-3-5
Pre-alarm threshold		x IΔn	25%
A type for pulsing alternate current			■
Signals			
Device powered visual signalling			■
Visual signalling of device not functioning/ not configured			■
Visual signalling of residual current protection			■
Electrical alarm/pre-alarm signal			■
Electric trip signal			■
Controls			
Remotely controlled opening command			■
Remotely controlled reset command			■
Operating range of closed transformers			
Ø 60 [mm] toroidal transformer		[A]	In max = 250A Use 0.03..30A
Ø 110 [mm] toroidal transformer		[A]	In max = 400A Use 0.03..30A
Ø 185 [mm] toroidal transformer		[A]	In max = 800A Use 0.1..30A
Connection to toroidal transformer			By means of 4 shielded or twisted conductors. Maximum tolerated length: 15m
Dimensions W x H x D		[mm]	96 x 96 x 77
Drilling for assembly on door		[mm]	92 x 92
Standard			IEC 60947-2 annex M

Accessories

Accessories for electronic trip units

	Accessories for electronic trip units			
	Ekip Display	Ekip LED Meter	SACE PR212/CI	External neutral
Distribution protection				
Ekip LS/I	–	–	–	–
Ekip I	–	–	–	–
Ekip LSI	■	■	–	■
Ekip LSIG	■	■	–	■
Motor protection				
Ekip M-I	–	–	–	–
Ekip M-LIU	–	–	–	–
Ekip M-LRIU	■	■	■	–
Generator Protection				
Ekip G-LS/I	–	–	–	–
Oversized Neutral Protection				
Ekip N-LS/I	–	–	–	–

Ekip Display

The Ekip Display is a unit which can be applied on the front of the solid-state trip unit and shows the current values, alarms and protection and communication parameter programming.

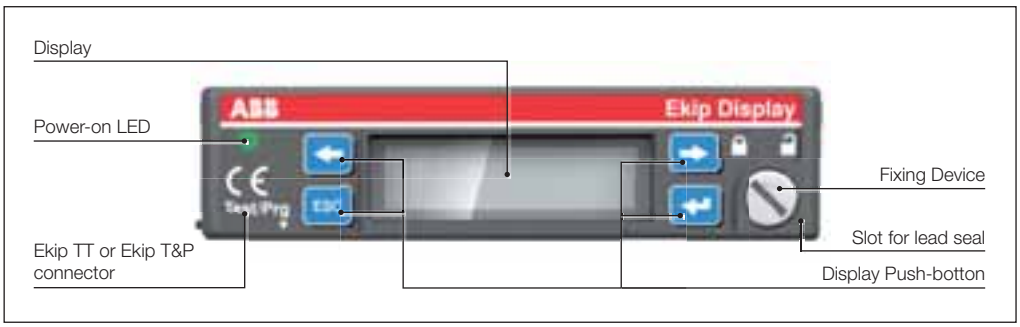

Main features:

- **installation**: Ekip Display can easily be installed on the front of the Ekip LSI, Ekip LISIG and Ekip M-LRIU electronic trip units. It is connected by means of the test connector on the front of the trip unit, and fixing is simple and reliable thanks to a specially designed mechanism. This mechanism also provides a practical way of fastening the accessories to the circuit-breaker in order to prevent undesired access to the dip-switches. Installation can be carried out under any conditions, even with the door closed and the electronic trip unit already on and functioning;
- **functions**: Ekip Display has four buttons for browsing through the menus. It functions in the self-supply mode starting from a current of I>0.2xIn circulating through at least one phase. Backlighting is activated in the presence of higher loads, thereby allowing a better leggibility of visualized informations. The rear lighting comes on in self-supply for a current I>0.4xIn and is always on when there is electronic trip unit auxiliary power supply.
  Ekip Display:
  - shows the current values;
  - shows the settings of the protection functions in Amperes or in In;
  - shows the protection that caused the release to trip and the fault current (only when there is 24V external voltage or the Ekip TT unit);
  - allows the trip thresholds of the trip unit to be programmed and the communication parameters to be set on bus system;
- **compatibility**: Ekip Display can be fitted even when front accessories, such as the motor, direct and transmitted rotary handles etc. are already installed. It's possible to use Ekip TT or Ekip T&P without removing Ekip Display.

Ekip LED Meter

The Ekip LED Meter can be applied to the front of the electronic trip unit and displays the current values and alarms.

Main features:

- **installation**: Ekip LED Meter can be easily installed on the front of Ekip LSI, Ekip LSIG and Ekip M-LRIU electronic trip units. It is connected by means of the test connector on the front of the release and fixing is simple and reliable thanks to a specially designed mechanism. This mechanism also provides a practical way of fastening the accessories to the circuit-breaker in order to prevent undesired access to the dip-switches. Installation can be carried out under any conditions, even with the door closed and the electronic trip unit already on and functioning;
- **functions**: Ekip LED Meter provides an accurate indication about the value of the current circulating in the trip unit. It does this by means of a scale of LED. Their different colours allow the normal operation, prealarm and alarm states of the circuit-breaker to be recognized at a glance. It functions in self-supply mode from a current of I>0.2xIn circulating through at least one phase or when electronic trip unit's auxiliary power is available;
- **compatibility**: the Ekip LED Meter can also be fitted when front accessories, such as the motor, direct and transmitted rotary handles. It's possible to use Ekip TT or Ekip T&P without removing Ekip LED Meter.

SACE PR212/CI contactor operator

PR212/CI is an interface device that allow Ekip M-LRIU to comand the contactor. The stand-by position normally corresponds to the opening position of the main contacts. PR212/CI can be used in conjunction with XT2-XT4 circuit-breakers equipped with the electronic trip unit for Ekip M-LRIU motor protection.
Main features:

- **installation**: PR212/CI can be installed both on a DIN rail and on the back of the door. It is connected to the electronic trip unit with a dedicated connector, which has to be ordered in relation to the circuit-breaker version;
- **functions**: when the release is set to "Normal Mode" the contactor can be opened if a fault occurs due to overload L, locked rotor R or phase failure/unbalance U.

Current sensor for external neutral

The current sensor for external neutral is applied to the uninterrupted neutral conductor. It allows the reading of the neutral current for all the protection functions.
Main features:

- **installation**: the external neutral current sensor is available for XT2 and XT4 three-pole circuit-breakers in the fixed/plug-in and withdrawable version equipped with Ekip LSI, Ekip LSIG electronic trip unit. The sensor must be connected to the release with the specific connector, which must be ordered separately.

Connection accessories

Devices which allow the electronic trip unit to be connected to external plant units or components. The connectors are available for the circuit-breakers in fixed, plug-in and withdrawable version.

Name of connector	Trip Units
External neutral connector	Ekip LSIG
Connector for PR212/CI	Ekip M-LRIU
Connector for 24V DC auxiliary power supply	Ekip LSI - Ekip LSIG - Ekip M-LRIU
Connector for PTC	Ekip M-LRIU

The connector for the auxiliary power supply is inserted inside the right-hand slot of the circuit-breaker, and occupies the space of two due auxiliary contacts. To check compatibility with the auxiliary contacts, consult the compatibility tables in the Accessories chapter.

Connector for 24V

HMI030 interface on the front of the switchboard

HMI030 is an interface on the front of the switchboard only usable with protection trip units fitted with Ekip Com.

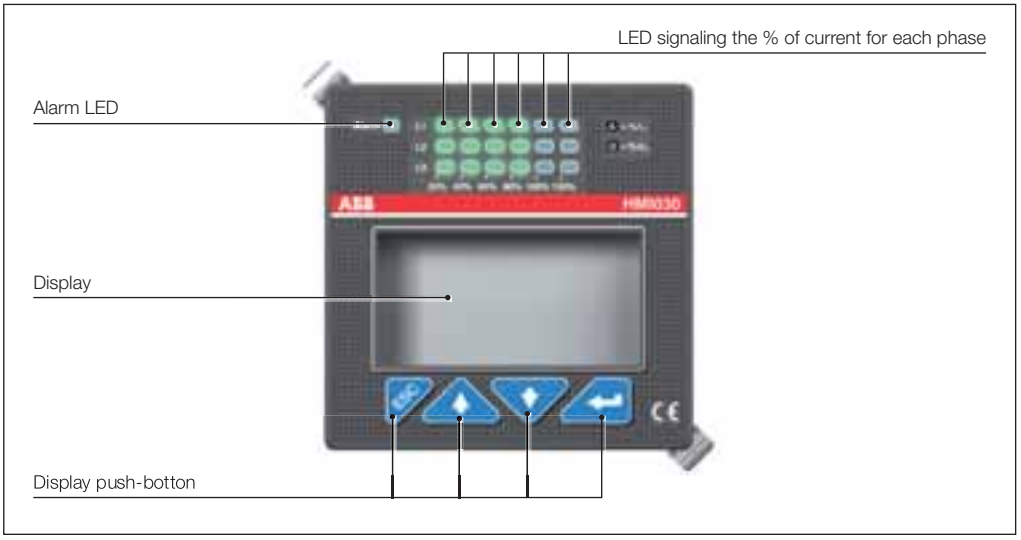

Main features:

- **installation**: HMI030 can be fitted into the hole in the door using the automatic click-in method. In situations where mechanical stress is particularly intense, it can also be installed by using the special clips supplied. It must be connected directly to the Ekip LSI, Ekip LSIG or Ekip M-LRIU protection trip unit with Ekip Com via the serial communication line. HMI030 requires a 24V DC power supply;
- **functions**: HMI030 consists of a graphic display and 4 buttons for browsing through the menus. This accessory allows you to view:
  – the measurements taken by the release to which it is connected;
  – the alarms/events of the release.
  Thanks to its high level of accuracy, the same as that of the trip unit protection, the device is a valid substitute for conventional instruments without any additional current transformers.

Ekip Com

Ekip Com allows the MOE-E motor operator to be controlled, to determine the ON/OFF/TRIP state of the circuit-breaker and to connect the electronic trip unit to a Modbus communication line.
Ekip Com is available in two versions: one version for the circuit-breakers in the fixed/plug-in version and a version complete with connector for the fixed part and the moving part for circuit-breakers in the withdrawable version.
Main characteristics:

- **installation**: the Ekip Com module is inserted in the special seat made in the right-hand pole of the circuit-breaker and fixing is carried out automatically without any need for screws or tools. Connection to the trip unit is made using the special small cable which, for greater practicality and safety, is fitted with a cable guide. The connection towards the Modbus line is made by means of the terminal box to which a 24V DC auxiliary power supply must also be connected, which activates both the module and the protection trip unit;
- **functions**: the Ekip Com module offers the possibility of acquiring the state of the circuit-breaker remotely and, in combination with the MOE-E motor operator, allows it to be opened and closed. If combined with a trip unit fitted with communication (Ekip LSI, Ekip LSIG or Ekip M-LRIU), the Ekip Com module allows the trip unit to be connected to a Modbus network, offering the possibility of programming the protections and acquiring the measurements and alarms when it is connected to a control and/or supervision system. When it is connected to the HMI030 unit, it is possible to have these data locally on the front of the switchboard.

For further details on the comunication systems which can be made by means of the Ekip Com module, refer to the “Communication Systems” paragraph in the “Ranges” chapter.

Ekip Com

	Circuit-breaker 3p	Circuit-breaker 4p
XT2 XT4		

EP010 - FBP

The EP010 Fieldbus interface allows SACE Tmax XT circuit-breakers to be integrated into communication systems to control and supervise using the most diffused communication protocols, such as Profibus, DeviceNet and CANopen (besides ModBus RTU, supported by Ekip Com).
To realize this, EP010 is interfaced on one side by an intelligent connector from ABB Field Bus Plug family’s, to allow the choosing of desired protocol.
This is achieved by using ABB FBP FieldBusPlug smart connectors, which allow communication to be activated with various different protocols.
Main features:

- **installation**: the EP010 interface allows XT2 and XT4 circuit-breakers fitted with the Ekip LSI, Ekip LSIG or Ekip M-LRIU electronic trip unit to be connected to the Fieldbus Plug system. Connections between EP010 and the electronic trip unit are made by means of the Ekip Com accessory, whereas connections between EP010 and the network are to be carried out by the Customer and depend on the Field bus plug system used. The PDP22 connector is advisable if the Profibus protocol is used, or the DNP21 connector in the case of the Device Net protocol.

Ekip Connect

Installation and diagnosis software for ABB SACE products with Modbus RTU communication. The software can be used during the commissioning stage, or for troubleshooting in an up and running communication network.

Ekip Connect automatically scans the RS-485 bus, detects all the devices connected and checks their configuration, checking all the possible address, parity and baud rate combinations. A simple click over SCAN will highlight:

- devices that fail to respond;
- configuration errors;
- incorrect addresses and parity;
- any wiring errors (with the SACE electronic trip unit);

thus achieving a complete diagnosis of the communication network.
Thanks to this friendly program, the Modbus communication network installation is very easy. Ekip T&P SW is distributed free of charge and can be downloaded from the BOL web site (http://bol.it.abb.com).

Accessories

Test and configuration accessories

	TESTING and CONFIGURING accessories	
	Ekip T&P	Ekip TT
Distribution protection		
Ekip LS/I	■	■
Ekip I	■	■
Ekip LSI	■	■
Ekip LSIG	■	■
Motor protection		
Ekip M-I	■	■
Ekip M-LIU	■	■
Ekip M-LRIU	■	■
Generator Protection		
Ekip G LS/I	■	■
Oversized Neutral Protection		
Ekip N-LS/I	■	■

Ekip T&P

Ekip T&P

Ekip T&P is a kit purpose studied to supervise, configure and testing electronic protection trip units.

Ekip T&P unit

Ekip T&P unit

The kit is composed by:
- Ekip T&P unit;
- Ekip TT unit;
- Adaptors for Emax and Tmax trip units;
- USB cable for connecting the Ekip T&P unit to the electronic trip unit;
- CD for installing Ekip Connect and the Ekip T&P driver.

The Ekip T&P unit is connected on one side to the USB port of its own PC and on the other, by means of a cable provided, to the protection trip unit of the SACE Tmax XT series.
The Ekip T&P unit allows automatic, manual test and the trip test of the device it is connected to. These functions are managed by means of the Ekip T&P Interface which can only be activated directly by the Ekip Connect when the Ekip T&P is present and connected to the PC.

Ekip TT

The Ekip TT accessory is supplied with a special connector which makes connection between the electronic trip unit and the Ekip TT unit easier. The kit also include san adaptor which allows use of the Ekip TT unit with the current Tmax breakers.
Ekip TT is a device which allows:

- verify the correct functioning of the electronic trip unit's opening solenoid and the trip mechanism of circuit-breaker (trip test);
- testing of the LEDs on the electronic trip unit it is connected to;
- (in case of intervention by electronic trip unit) to supply the trip unit powered by auxiliary power to show the latest intervened protection. Simply linking Ekip TT to the electronic trip unit (or to the Ekip display or to the Ekip LED Meter), the LED light on the latest protection intervened.

Its reduced dimension make it pocket size.

	Ekip T&P functions						Ekip TT functions		
	Trip Test	Protection function test	Parameter reading	Protection parameter programming	Communication parameter programming	Thermal memory enabling/ disabling	Trip test	LED test	Latest trip detection
Distribution protection									
Ekip LS/I	■	■	■	–	–	■	■	■	■
Ekip I	■	■	■	–	–	–	■	■	■
Ekip LSI	■	■	■	■	■	■	■	■	■
Ekip LSIG	■	■	■	■	■	■	■	■	■
Motor Protection									
Ekip M-I	–	–	–	–	–	–	■	■	■
Ekip M-LIU	■	■	■	–	–	–	■	■	■
Ekip M-LRIU	■	■	■	■	■	–	■	■	■
Generator Protection									
Ekip G-LS/I	■	■	■	–	–	■	■	■	■
Oversized Neutral Protection									
Ekip N-LS/I	■	■	■	–	–	■	■	■	■

Accessories

Automatic network-generator transfer unit ATS021-ATS022

ATS021

ATS022

The ATS (Automatic Transfer Switch) is the network-generator transfer unit used in installations where switching the main power line to an emergency one is required, to ensure power supply to the loads in the case of anomalies in the main line.
The unit is able to manage the entire transfer procedure automatically, and prepares the commands for carrying out the procedure manually as well.
In the case of an anomaly in the main line voltage, in accordance with the parameters set by the user, the opening of the circuit-breaker of the main line, the starting of the generator set (when provided) and the closing of the emergency line are performed. In the same way, in the case of the main line returning, the procedure of reverse transfer is controlled automatically.
The new generation of ATS (ATS021 and ATS022) offers the most advanced and complete solutions to guarantee service continuity. The ATS021 and ATS022 can be used both with all the circuit-breakers in the SACE Tmax XT family and with the switch-disconnectors.
The ATS021 and ATS022 devices have been designed to operate with self-supply. The ATS022 unit also prepares the connection for auxiliary power supply, which allows additional functions to be used.

The ATS021 and ATS022 devices carry out control of both the power supply lines and analyse:
- phase unbalance;
- frequency unbalance;
- phase loss.

Apart from the standard control functions, with the ATS022 unit, the following is possible:
- selecting the priority line;
- controlling a third circuit-breaker;
- incorporating the device in a supervision system with Modbus communication (auxiliary power supply is needed);
- reading and setting the parameters, and displaying the measurements and alarms, by means of a graphic display.

Typical applications for use are: power supply to UPS (Uninterrupted Power Supply) units, operating rooms and primary hospital services, emergency power supply for civil buildings, airports, hotels, data banks and telecommunication systems, power supply of industrial lines for continuous processes.

For correct configuration, each circuit-breaker connected to the ATS021 or ATS022 must be fitted with the following accessories:
- mechanical interlock;
- motorised control of opening and closing;
- key lock against just manual operation for the motor operator;
- contact for signalling the state (open/closed) and contact for tripped;
- contact for racked-in (in the case of a withdrawable version circuit-breaker).

	ATS021	ATS022
General		
Auxiliary Power Supply	Not Required	Not Required (24-110 Vdc is required only for Modbus dialogue and 16 2/3 Hz system)
Rated Voltage, Un [VAC]	Max 480	Max 480
Frequency [Hz]	50, 60	16 2/3, 50, 60, 400
Dimensions (HxLxD) [mm]	96x144x170	96x144x170
Type of installation	Door mounting	Door mounting
	DIN-rail mounting	DIN-rail mounting
Operating Mode	Auto/Manual	Auto/Manual
Features		
Monitoring of the Normal and Emergency lines	■	■
Controlling CBs of the Normal and Emergency lines	■	■
Generator set startup	■	■
Generator set shutdown with adjustable delay	■	■
Bus-tie	–	■
No-priority Line	–	■
Modbus RS485	–	■
Display	–	■
Ambient conditions		
Operating temperature	-20…+60 °C	-20…+60 °C
Humidity	5% - 90% without condensation	5% - 90% without condensation
Operating thresholds		
Minimum voltage	-30%…-5%Un	-30%…-5%Un
Maximum voltage	+5%…+30%Un	+5%…+30%Un
Fixed frequency thresholds	-10%…+10%fn	-10%…+10%fn
Test		
Test Mode	■	■
Compliance with standards		
Electronic equipment for use in power installations	EN-IEC 50178	EN-IEC 50178
Electromagnetic compatibility	EN 50081-2	EN 50081-2
	EN 50082-2	EN 50082-2
Environmental conditions	IEC 68-2-1	IEC 68-2-1
	IEC 68-2-2	IEC 68-2-2
	IEC 68-2-3	IEC 68-2-3

Accessories

Compatibility of accessories

Check whether the different devices are compatible/incompatible with each other when ordering accessories. The following table allow provides a simple check of the compatibility between:

- mechanical accessories, accessories for electronic trip units, motors and residual current devices;
- internal electrical accessories.

To understand the abbreviations used to identify the accessories more easily, refer to the “Symbols” paragraph in chapter 8, “Glossary”.

Three-pole circuit-breaker

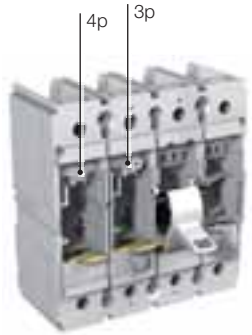

Four-pole circuit-breaker

Example of reading the compatibility tables

Fixed/plug-in circuit-breaker compatibility XT1-XT3

	SOR 3p	UVR 3p	PS-SOR 3p	3Q 3p	SA 3p	SOR 4p	UVR 4p	.....
SOR 3p						✔	✔	
UVR 3p [1]	[2]	[3]	[4]	[5]	[6]	✔ [7]	✔ [8]	
PS-SOR 3p						✔	✔	
3Q sx 3p						✔	✔	
SA 3p						✔	✔	
SOR 4p	✔	✔	✔	✔	✔		✔	
UVR 4p	✔	✔	✔	✔	✔	✔		
.....								

The **UVR** positioned in the slot of the **3rd pole**(1) is:

- incompatible with the SOR positioned in the 3rd pole(2);
- incompatible with the UVR positioned in the 3rd pole(3);
- incompatible with the PS-SOR positioned in the 3rd pole(4);
- incompatible with the 3Q contacts on the left in the 3rd pole(5);
- incompatible with the SA of the residual current device(6);
- compatible with the SOR positioned in the slot of the 4th pole(7);
- compatible with the UVR positioned in the slot of the 4th pole(8);
- ....

Compatibility of mechanical accessories

	RHD	RHE	RHS	FLD	PLL on CB	KLC on CB	KLC on RHX	KLC on FLD	KLC on motor	MOD/ MOE/ MOE-E	Ekip Display	Ekip LED Meter	SOR/ PS-SOR/ UVR/SA/ 3Q sx 3p
RHD							✔				✔	✔	✔
RHE							✔				✔	✔	✔
RHS											✔	✔	✔
FLD								✔			✔	✔	✔
PLL on CB											✔	✔	✔
KLC on CB											✔	✔	
KLC on RHX	✔	✔									✔	✔	✔
KLC on FLD				✔							✔	✔	✔
KLC on motor										✔	✔	✔	✔
MOD/MOE/MOE-E									✔		✔	✔	✔
Ekip Display	✔	✔	✔	✔	✔	✔	✔	✔	✔	✔			✔
Ekip LED Meter	✔	✔	✔	✔	✔	✔	✔	✔	✔	✔			✔
SOR/PS-SOR/UVR/SA/3Q sx 3p	✔	✔	✔	✔	✔		✔	✔	✔	✔	✔	✔	

✔ Compatibility

Compatibility of electrical accessories

Fixed/plug-in circuit-breaker compatibility XT1-XT3

	SOR 3p	UVR 3p	PS-SOR 3p	3Q sx 3p	SA 3p	SOR 4p	UVR 4p	PS-SOR 4p	3Q sx 4p	1Q 1SY	2Q 1SY	3Q 1SY	KLC on CB
SOR 3p						✔	✔	✔	✔	✔	✔	✔	
UVR 3p						✔	✔	✔	✔	✔	✔	✔	
PS-SOR 3p						✔	✔	✔	✔	✔	✔	✔	
3Q sx 3p						✔	✔	✔	✔	✔	✔	✔	
SA 3p						✔	✔	✔	✔	✔	✔	✔	
SOR 4p	✔	✔	✔	✔	✔					✔	✔	✔	✔
UVR 4p	✔	✔	✔	✔	✔					✔	✔	✔	✔
PS-SOR 4p	✔	✔	✔	✔	✔					✔	✔	✔	✔
3Q sx 4p	✔	✔	✔	✔	✔					✔	✔	✔	✔
1Q 1SY	✔	✔	✔	✔	✔	✔	✔	✔	✔				✔
2Q 1SY	✔	✔	✔	✔	✔	✔	✔	✔	✔				✔
3Q 1SY	✔	✔	✔	✔	✔	✔	✔	✔	✔				✔
KLC on CB						✔	✔	✔	✔	✔	✔	✔	

✔ Compatibility

Compatibility of electrical accessories

Fixed/plug-in circuit-breaker compatibility XT2-XT4

	SOR 3p	UVR 3p	PS-SOR 3p	3Q sx 3p	SA	AUE inter-nal 3p	SOR 4p	UVR 4p	PS-SOR 4p	3Q sx 4p	S51	1Q 1SY	2Q 1SY	3Q SY	3Q 2SY	2Q 2SY 1S51	400V 2Q	400V 1Q 1SY	24V	Ekip Com	KLC on CB
SOR 3p						✔	✔	✔	✔	✔	✔	✔	✔	✔	✔	✔	✔	✔	✔	✔	
UVR 3p						✔	✔	✔	✔	✔	✔	✔	✔	✔	✔	✔	✔	✔	✔	✔	
PS-SOR 3p						✔	✔	✔	✔	✔	✔	✔	✔	✔	✔	✔	✔	✔	✔	✔	
3Q sx 3p							✔	✔	✔	✔	✔	✔	✔	✔	✔	✔	✔	✔	✔	✔	
SA						✔	✔	✔	✔	✔	✔	✔	✔	✔	✔	✔	✔	✔	✔	✔	
AUE internal 3p	✔	✔	✔		✔		✔	✔	✔	✔	✔	✔	✔	✔	✔	✔	✔	✔	✔	✔	
SOR 4p	✔	✔	✔	✔	✔	✔					✔	✔	✔	✔	✔	✔	✔	✔	✔	✔	✔
UVR 4p	✔	✔	✔	✔	✔	✔					✔	✔	✔	✔	✔	✔	✔	✔	✔	✔	✔
PS-SOR 4p	✔	✔	✔	✔	✔	✔					✔	✔	✔	✔	✔	✔	✔	✔	✔	✔	✔
3Q sx 4p	✔	✔	✔	✔	✔	✔					✔	✔	✔	✔	✔	✔	✔	✔	✔	✔	✔
S51	✔	✔	✔	✔	✔	✔	✔	✔	✔	✔		✔	✔						✔	✔	✔
1Q 1SY	✔	✔	✔	✔	✔	✔	✔	✔	✔	✔	✔								✔		✔
2Q 1SY	✔	✔	✔	✔	✔	✔	✔	✔	✔	✔	✔										✔
3Q 1SY	✔	✔	✔	✔	✔	✔	✔	✔	✔	✔											✔
3Q 2SY	✔	✔	✔	✔	✔	✔	✔	✔	✔	✔											✔
2Q 2SY 1S51	✔	✔	✔	✔	✔	✔	✔	✔	✔	✔											✔
400V 2Q	✔	✔	✔	✔	✔	✔	✔	✔	✔	✔											✔
400V 1Q 1SY	✔	✔	✔	✔	✔	✔	✔	✔	✔	✔											✔
24V	✔	✔	✔	✔	✔	✔	✔	✔	✔	✔	✔	✔									✔
Ekip Com	✔	✔	✔	✔	✔	✔	✔	✔	✔	✔	✔										✔
KLC on CB							✔	✔	✔	✔	✔	✔	✔	✔	✔	✔	✔	✔	✔	✔	

✔ Compatibility

Accessories

Compatibility of accessories

Withdrawable circuit-breaker compatibility XT2-XT4

	S51	1Q 1SY	3Q 1SY	3Q 2SY	2Q 2SY S51	400V 2Q	400V 1Q 1SY	Ekip Com	24V	PR 212CI	NE	PTC	MOE	MOE -E	AUX-MOE	AUE	SOR 3p	UVR 3p	PS-SOR 3p	SA	SOR 4p	UVR 4p	PS-SOR 4p
S51		✔						✔	✔	✔	✔		✔	✔	✔	✔	✔	✔	✔	✔	✔	✔	✔
1Q 1SY	✔								✔		✔	✔	✔	✔	✔	✔	✔	✔	✔	✔	✔	✔	✔
3Q 1SY											✔		✔	✔	✔	✔	✔	✔	✔	✔	✔	✔	✔
3Q 2SY													✔	✔	✔	✔	✔	✔	✔	✔	✔	✔	✔
2Q 2SY S51													✔	✔	✔	✔	✔	✔	✔	✔	✔	✔	✔
400V 2Q											✔	✔	✔	✔	✔	✔	✔	✔	✔	✔	✔	✔	✔
400V 1Q 1SY											✔	✔	✔	✔	✔	✔	✔	✔	✔	✔	✔	✔	✔
Ekip Com	✔									✔	✔	✔	✔	✔	✔	✔	✔	✔	✔	✔	✔	✔	✔
24V	✔	✔										✔	✔	✔	✔	✔	✔	✔	✔	✔	✔	✔	✔
PR212CI	✔							✔			✔	✔	✔		✔	✔	✔	✔	✔	✔	✔	✔	✔
NE	✔	✔	✔			✔	✔	✔		✔			✔	✔	✔	✔	✔	✔	✔	✔	✔	✔	✔
PTC		✔				✔	✔	✔	✔	✔			✔	✔	✔	✔	✔	✔	✔	✔	✔	✔	✔
MOE	✔	✔	✔	✔	✔	✔	✔	✔	✔	✔	✔	✔			✔[1]		✔	✔	✔	✔	✔	✔	✔
MOE-E	✔	✔	✔	✔	✔	✔	✔	✔	✔		✔	✔			✔[1]		✔	✔	✔	✔	✔	✔	✔
AUX-MOE	✔	✔	✔	✔	✔	✔	✔	✔	✔	✔	✔	✔	✔	✔			✔	✔	✔	✔			
AUE	✔	✔	✔	✔	✔	✔	✔	✔	✔	✔	✔	✔					✔	✔	✔	✔	✔	✔	✔
SOR 3p	✔	✔	✔	✔	✔	✔	✔	✔	✔	✔	✔	✔	✔	✔	✔	✔					✔	✔	✔
UVR 3p	✔	✔	✔	✔	✔	✔	✔	✔	✔	✔	✔	✔	✔	✔	✔	✔					✔		✔
PS-SOR 3p	✔	✔	✔	✔	✔	✔	✔	✔	✔	✔	✔	✔	✔	✔	✔	✔					✔	✔	✔
SA	✔	✔	✔	✔	✔	✔	✔	✔	✔	✔	✔	✔	✔	✔	✔	✔					✔	✔	✔
SOR 4p	✔	✔	✔	✔	✔	✔	✔	✔	✔	✔	✔	✔	✔	✔		✔	✔	✔	✔	✔			
UVR 4p	✔	✔	✔	✔	✔	✔	✔	✔	✔	✔	✔	✔	✔	✔		✔	✔		✔	✔			
PS-SOR 4p	✔	✔	✔	✔	✔	✔	✔	✔	✔	✔	✔	✔	✔	✔		✔	✔	✔	✔	✔			

✔ Compatibility
[1] AUX-MOE always supplied with MOE and MOE-E

Characteristic Curves and Technical Information*

Index

Characteristic Curves

Examples of Curve reading **4**/2

Trip curves with thermomagnetic trip unit

Trip curves for distribution **4**/3

Trip curves for motor protection **4**/5

Trip curves for generator protection **4**/6

Trip curves with electronic trip unit

Trip curves for distribution **4**/7

Trip curves for motor protection **4**/10

Trip curves for generator protection **4**/13

Trip curves for oversized neutral protection **4**/14

Specific let-through energy curves

240V **4**/15

415-440V **4**/16

500V **4**/17

690V **4**/18

Limiting curves

240V **4**/19

415-440V **4**/20

500V **4**/21

690V **4**/22

Technical Information

Temperature performances **4**/23

Dissipated powers **4**/27

* All the curves contained in this chapter are preliminary; for more information contact ABB SACE

Examples of Curve reading

Example 1 – XT3N 250
Trip curves for distribution (thermomagnetic trip unit)

Let us consider an XT3N 250 TMD In=250 A circuit-breaker.
According to the conditions the overload is found in, i.e. with the circuit-breaker at thermal regime or not, tripping of the thermal protection varies considerably.
For example, for an overload current $3xI_1$, the trip time is between 107.9 s and 31.5 s for cold tripping and between 31.5 s and 7.0 s for hot tripping.
For fault current values higher than 2500 A the circuit-breakers trips with the instantaneous magnetic protection I_3.

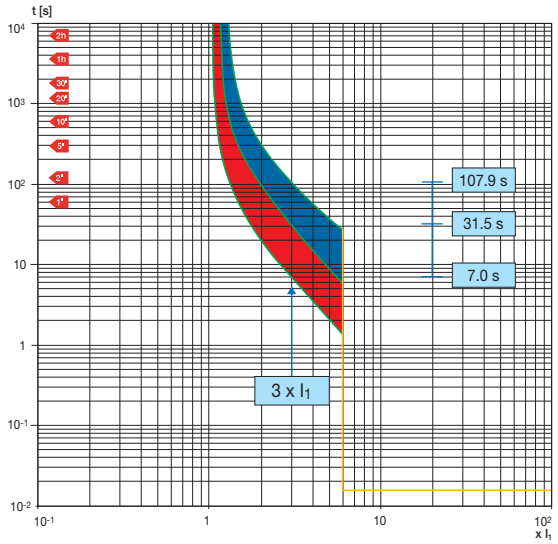

Example 2 – XT2N 160
Specific let-through energy curves

The following figure shows an example of the graph of the specific let-through energy of the XT2N 160 In=160A circuit-breaker at a voltage of 220/230 V.
The prospective symmetrical short-circuit current is indicated on the abscissas, whereas the values of the specific let-through energy expressed in A^2s are shown on the ordinates.
The circuit-breaker lets through a value of I^2t equal to 0.76 · 10^6 · A^2 s in correspondence with a short-circuit current of 20 kA.

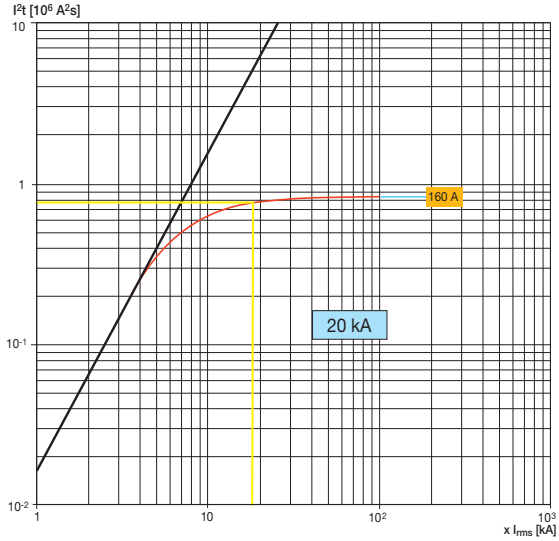

Example 3 – XT2N 160
Limitation curves

The figure below gives the trend of the Limitation curves of the XT2N 160 In=160 A circuit-breaker.
The effective value of the prospective symmetrical short-circuit current is given on the abscissas of the diagram, whereas the peak value of the short-circuit current is indicated on the ordinates.
The limiting effect can be evaluated by comparing the peak value corresponding to the prospective short-circuit current (curve A) with the peak limited value (curve B), at the same value of symmetrical short-circuit current.
For a fault current of 20 kA, the XT2N 160 circuit-breaker with a thermomagnetic trip unit In =160 A limits the peak prospective short-circuit current to 13.5 kA at a voltage of 500 V, with a reduction in relation to the peak value of the prospective short-circuit current of 36.5 kA.

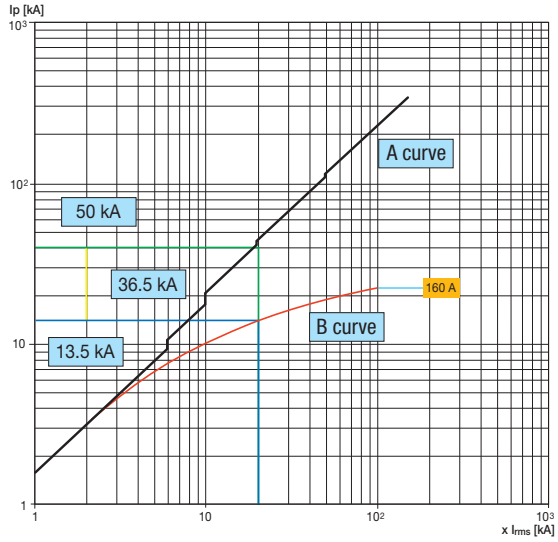

Trip curves with thermomagnetic trip unit

Trip curves for distribution

XT1 160 TMD In=16...63A

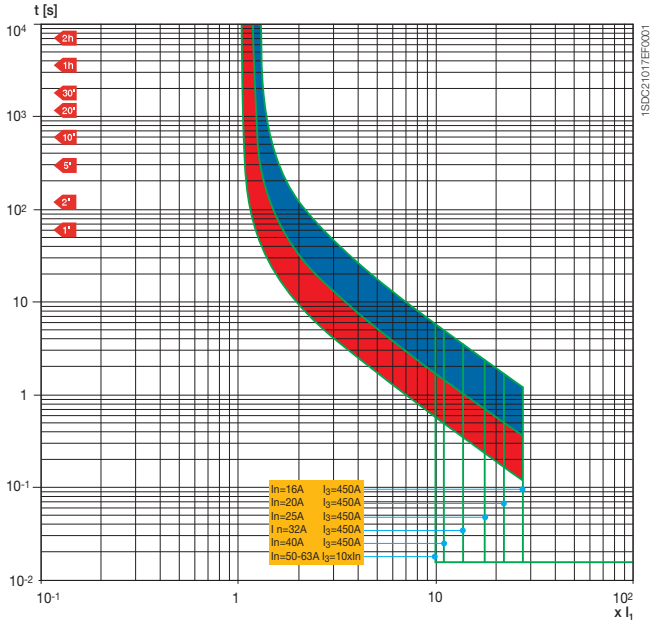

XT1 160 TMD In=80...160A

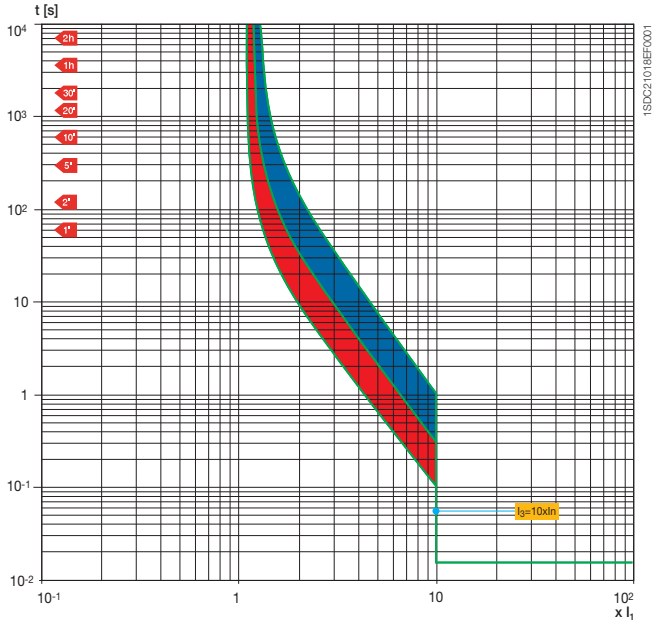

XT2 160 TMA In=1.6...160A

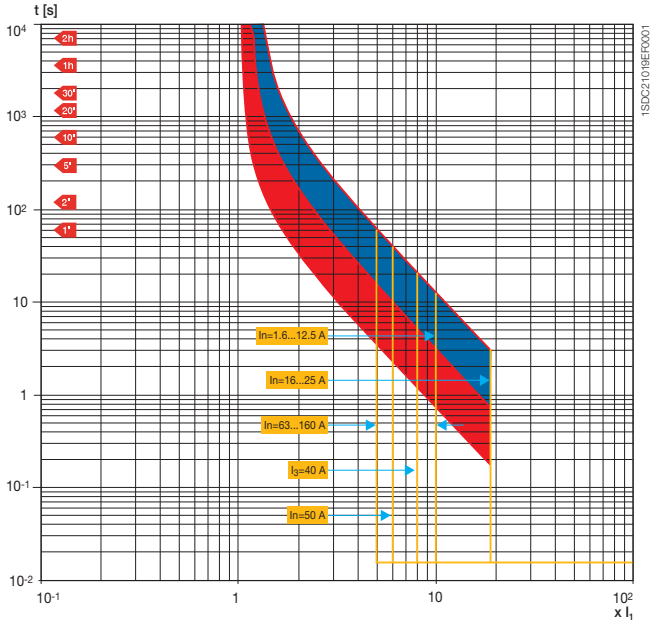

XT3 250 TMD In=63...250A

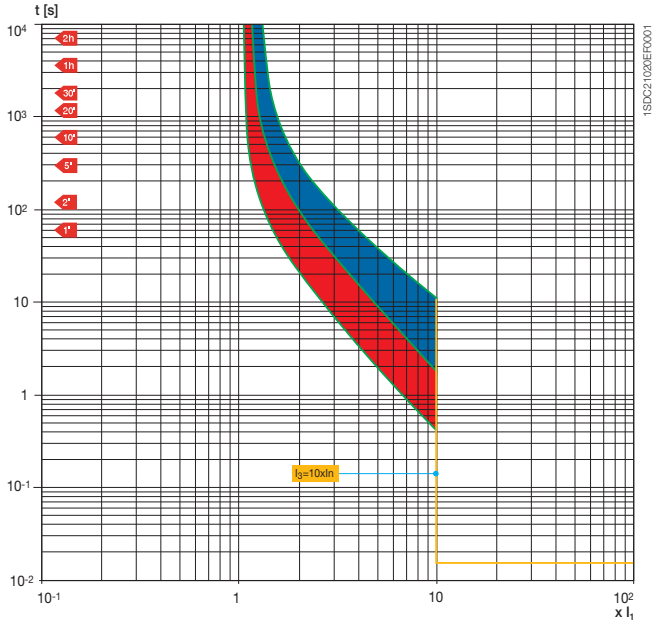

Trip curves with thermomagnetic trip unit

Trip curves for distribution

XT4 250 TMA In=16...250A

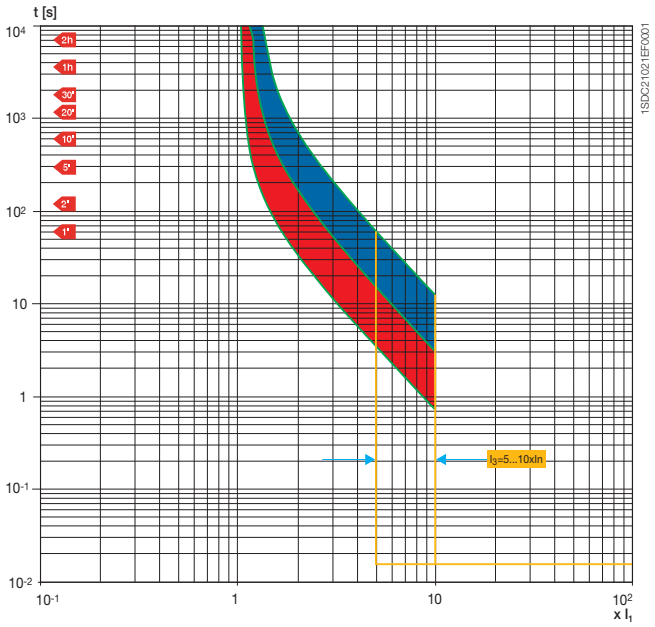

Trip curves with thermomagnetic trip unit

Trip curves for motor protection

XT2 100 MF/MA In=1...100A

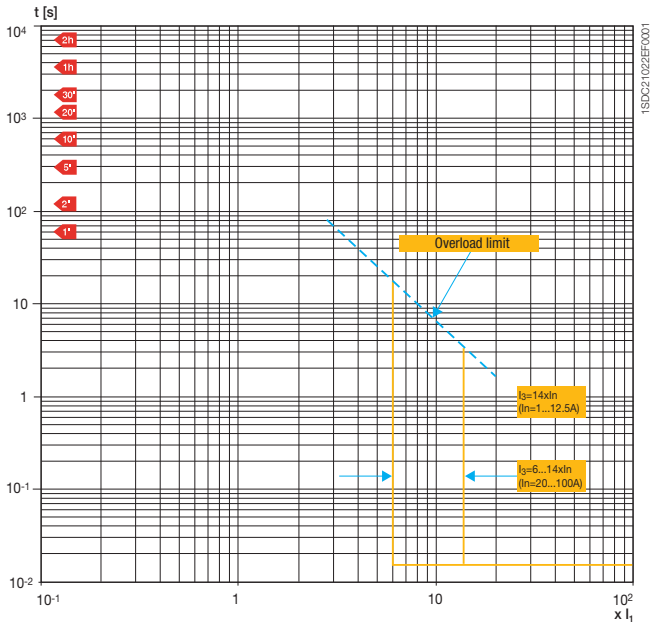

XT3 250 MA In=100...250A

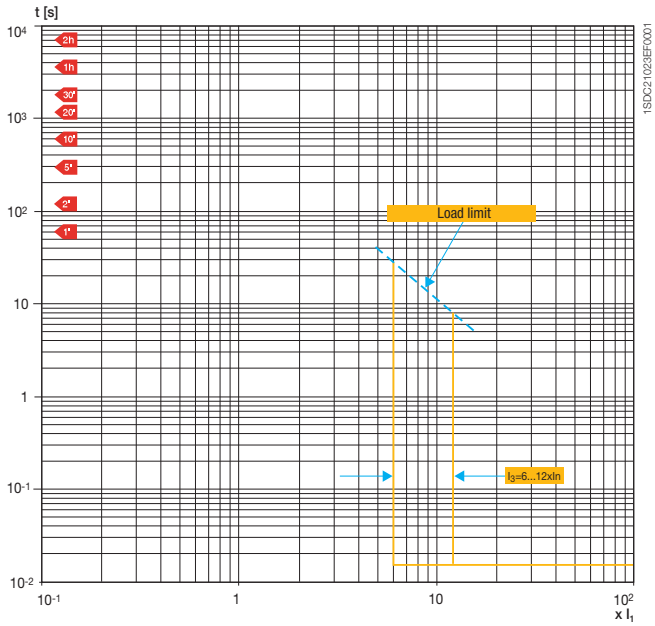

XT4 200 MA In=10...200A

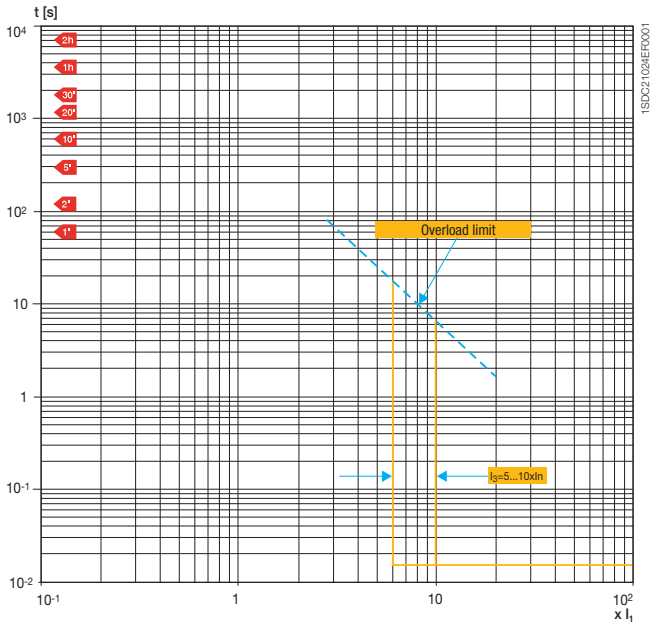

Trip curves with thermomagnetic trip unit

Trip curves for generator protection

XT2 160 TMG In=16...160A

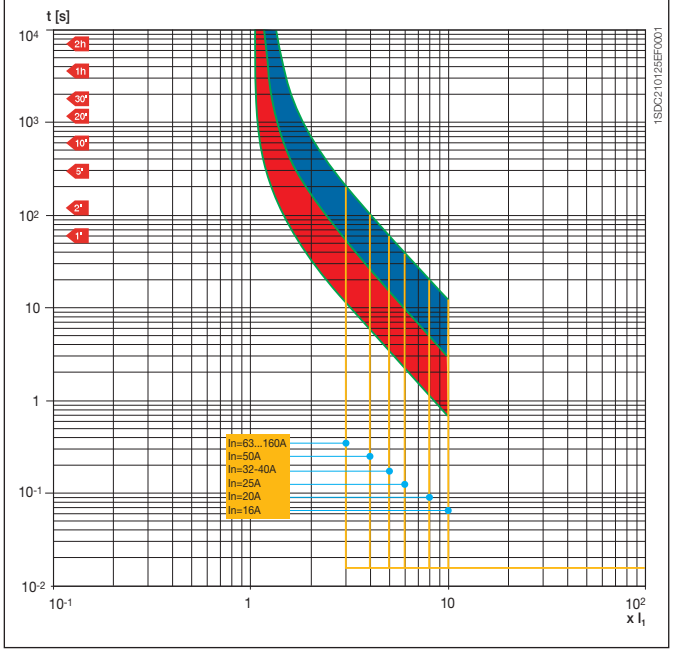

XT3 250 TMG In=63...250A

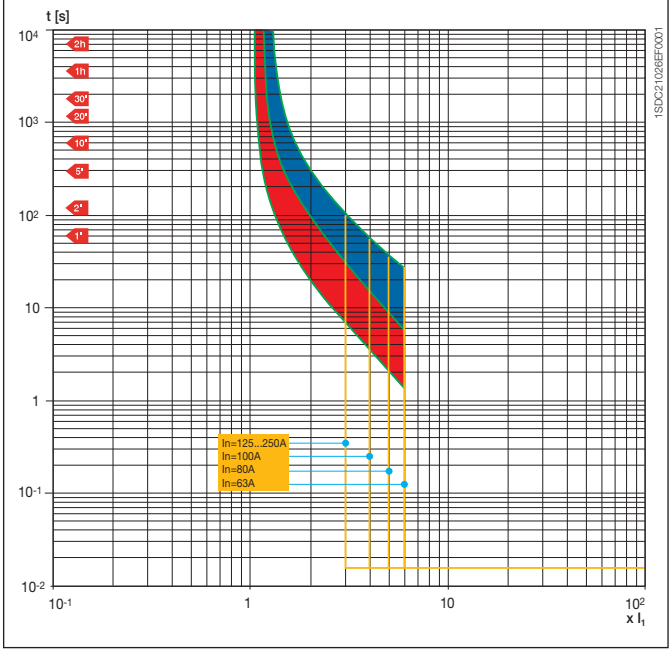

Trip curves with electronic trip unit

Trip curves for distribution

XT2 Ekip LS/I
L-I functions

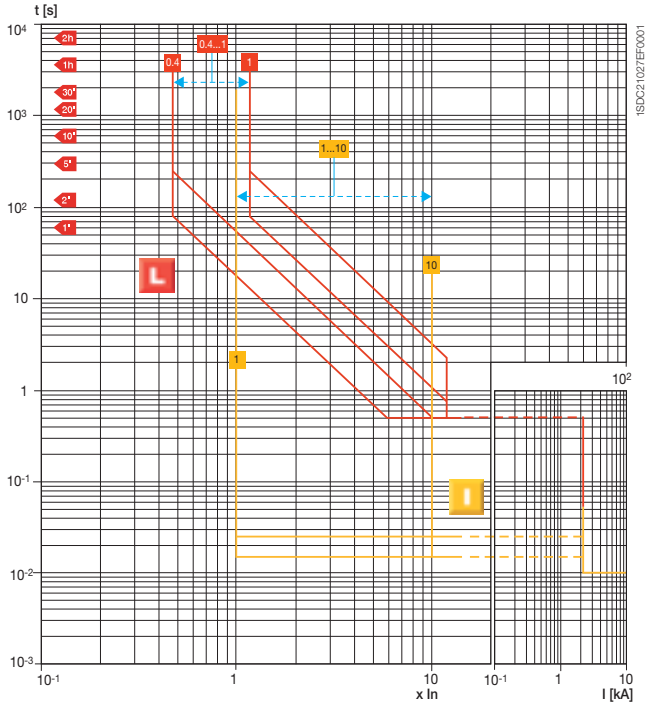

XT2 Ekip LS/I
L-S functions

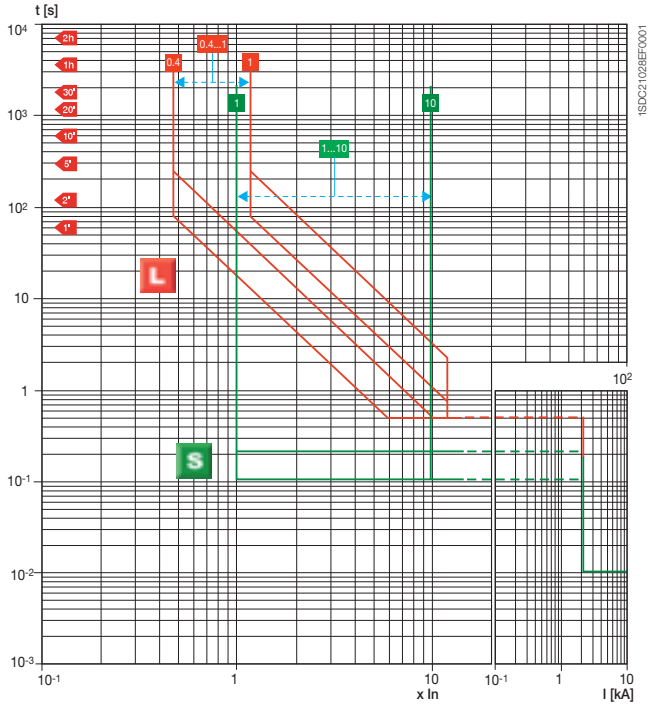

XT2 Ekip I
I function

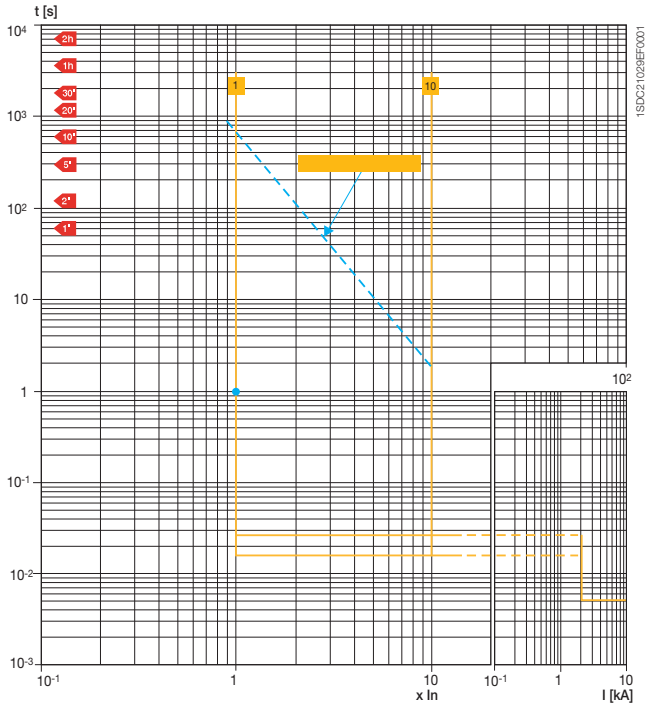

XT2 Ekip LSI
LSI functions

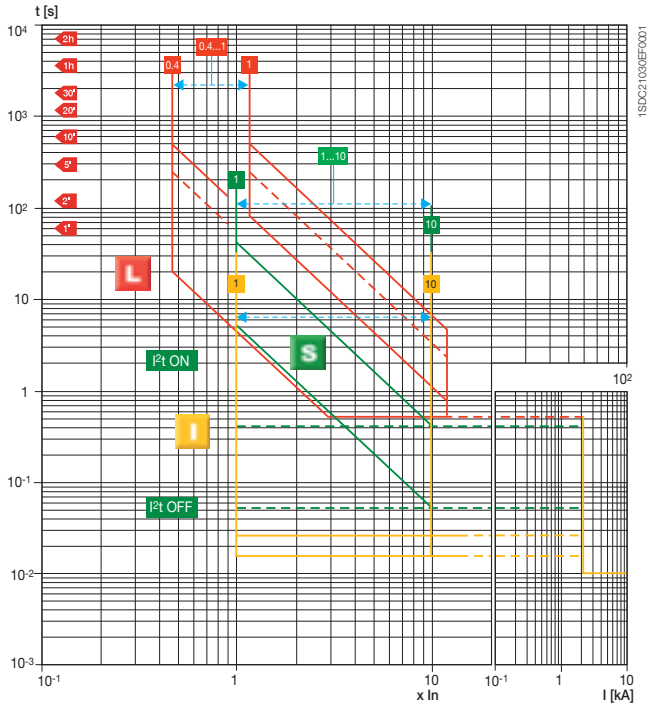

Trip curves with electronic trip unit

Trip curves for distribution

XT2 Ekip LSIG
LSI functions

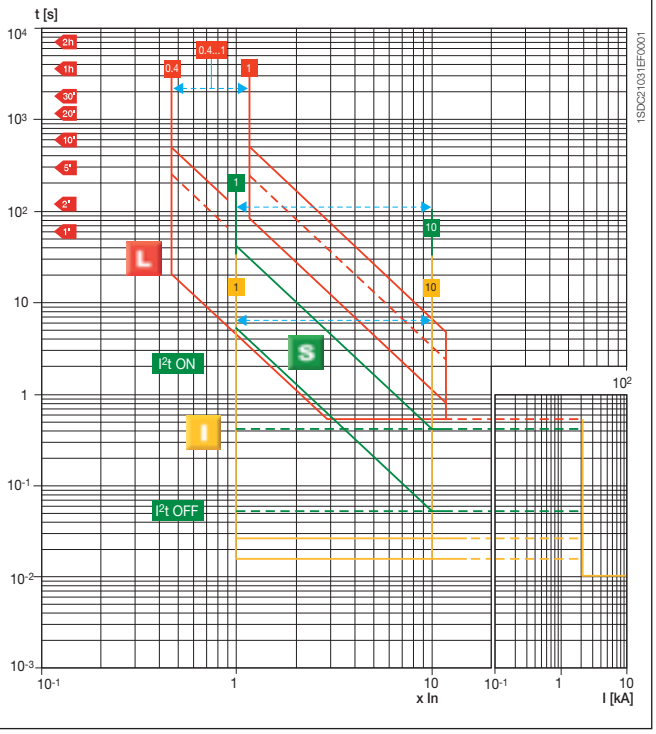

XT2 Ekip LSIG
G function

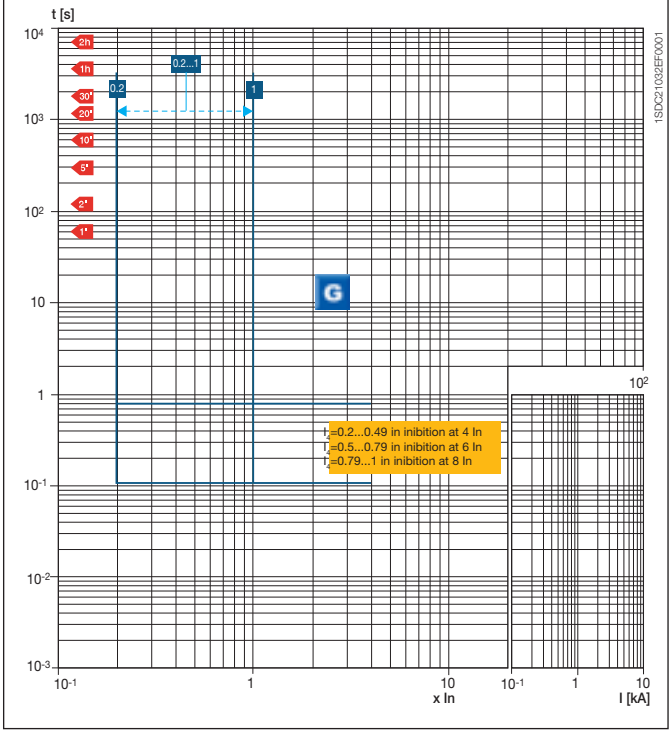

XT4 Ekip LS/I
L-I functions

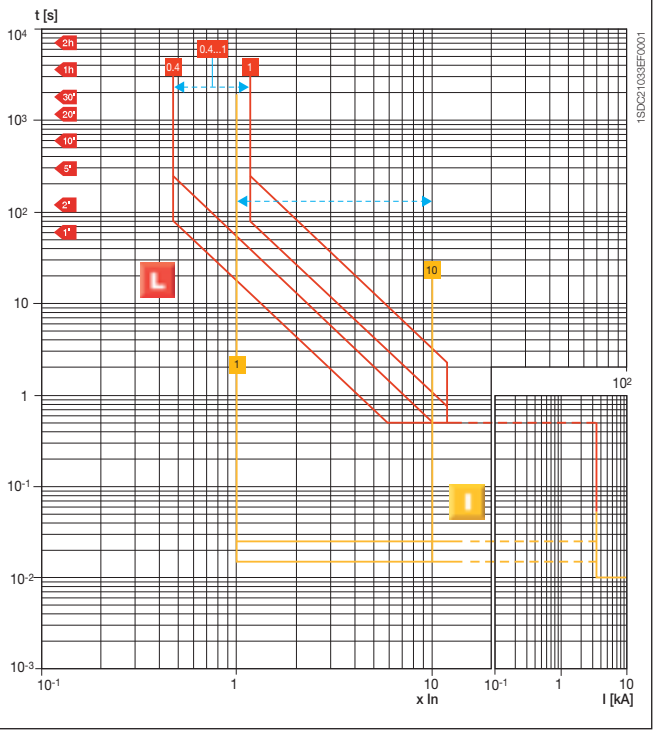

XT4 Ekip LS/I
L-S functions

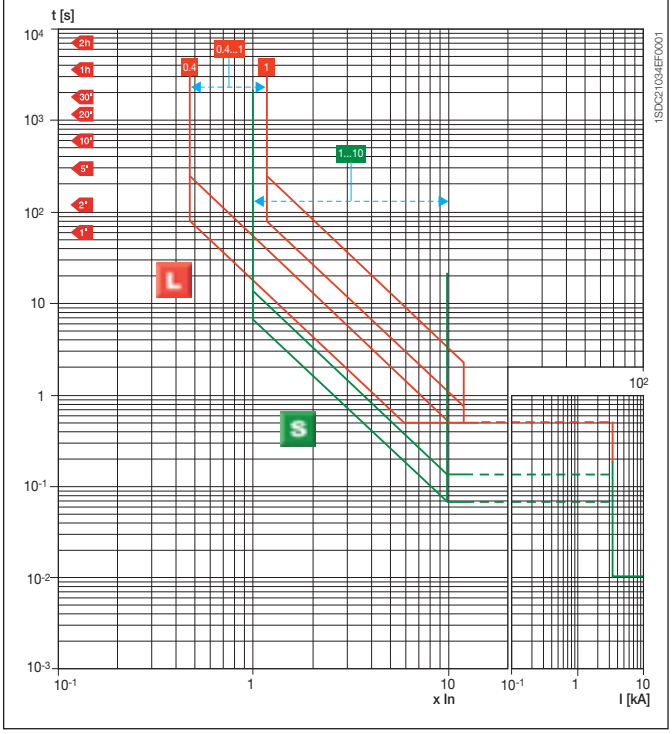

XT4 Ekip I
I function

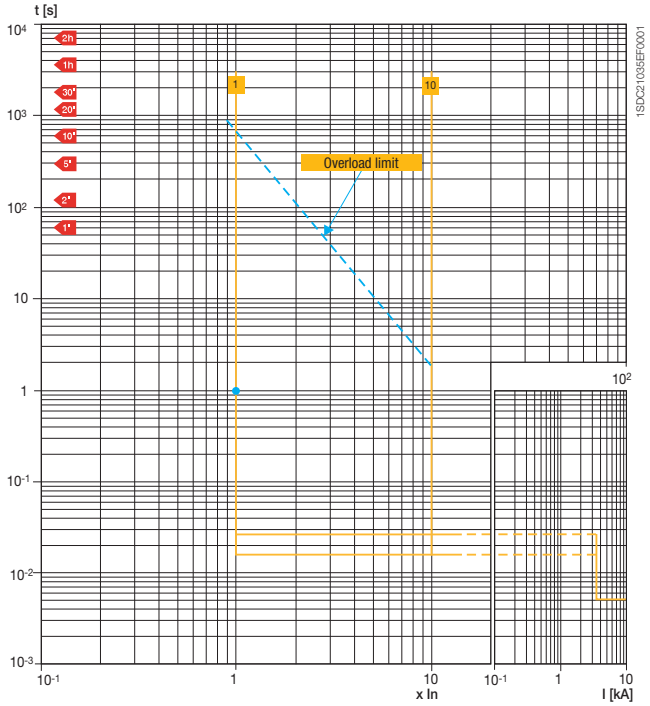

XT4 Ekip LSI
LSI functions

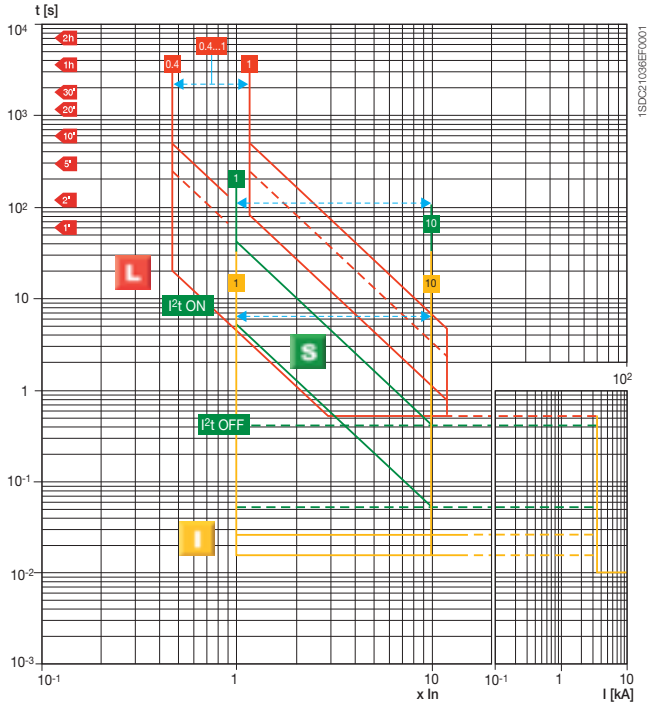

XT4 Ekip LSIG
LSI functions

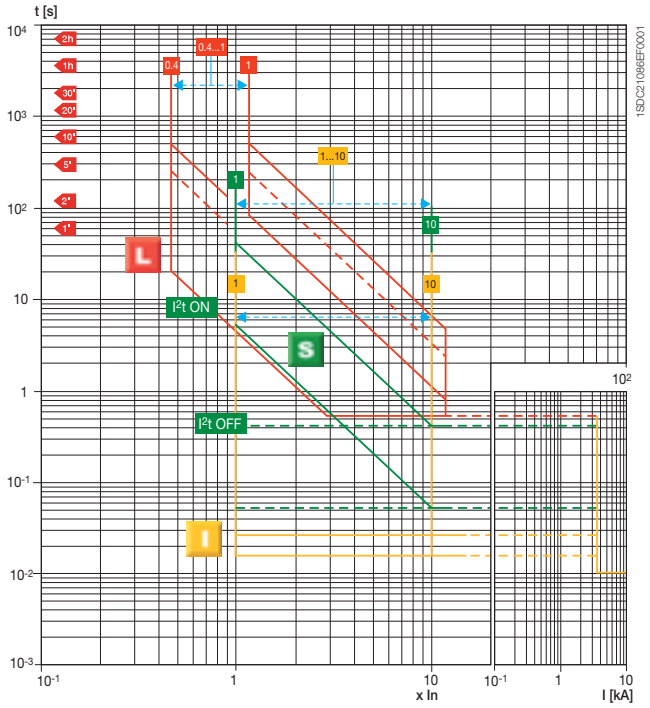

XT4 Ekip LSIG
G function

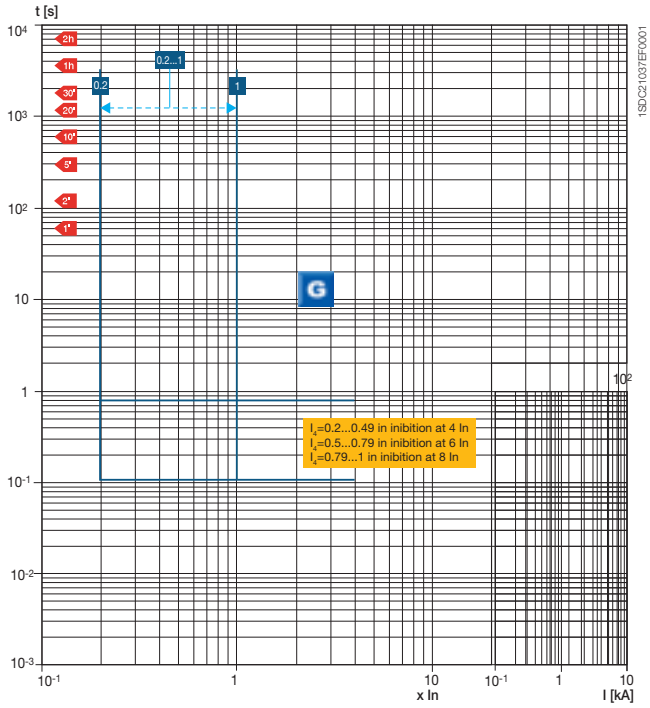

Trip curves with electronic trip unit

Trip curves for motor protection

XT2-XT4 Ekip M-I
I function

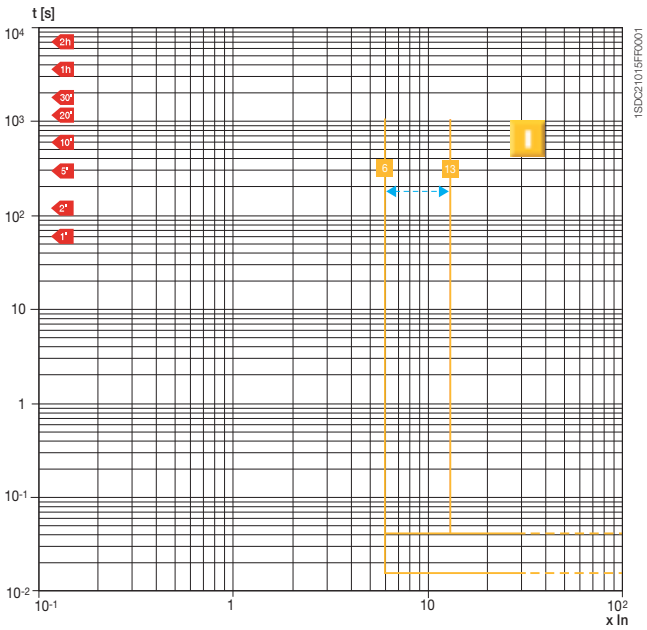

XT2-XT4 Ekip M-LIU
L function
(hot and cold trip)

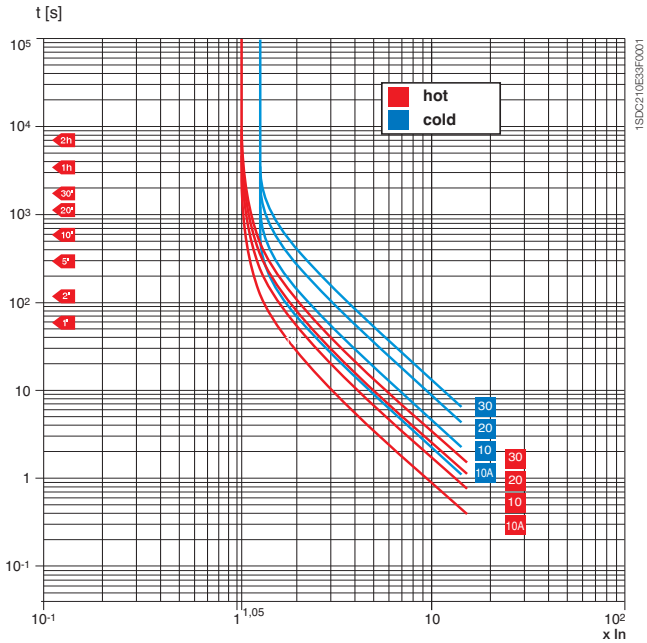

XT2-XT4 Ekip M-LIU
L function
(hot trip with 1 or 2 phases supplied)

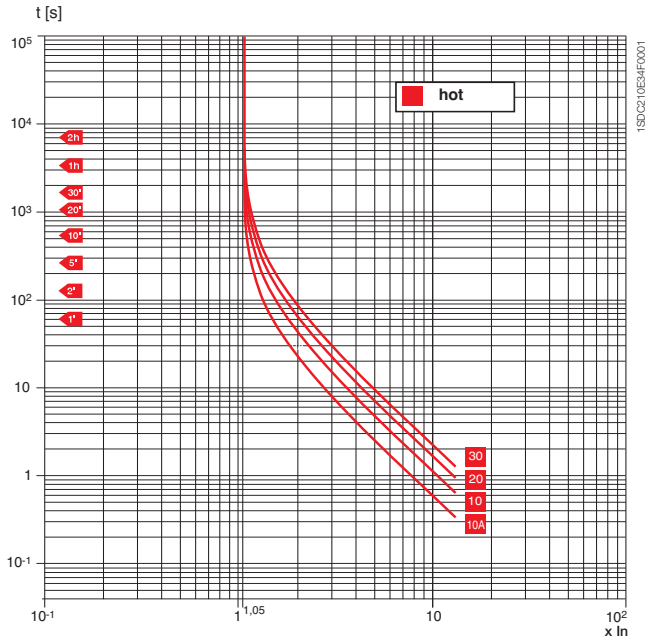

XT2-XT4 Ekip M-LIU
I function

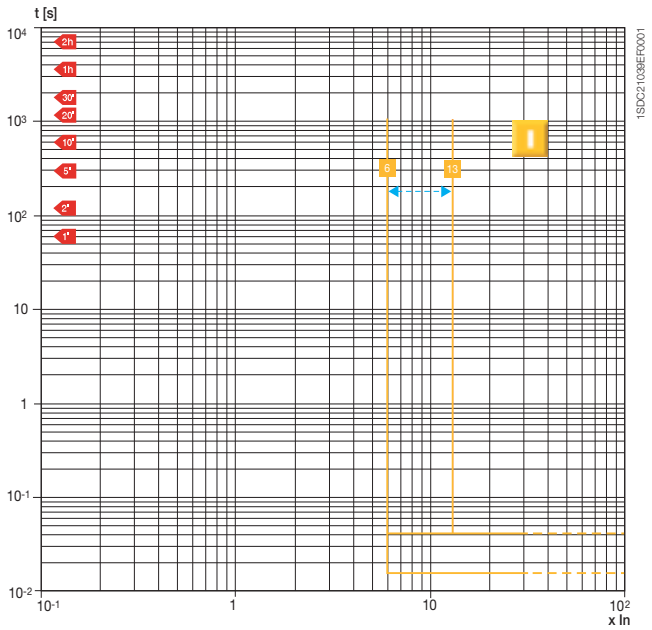

XT2-XT4 Ekip M-LIU
U function

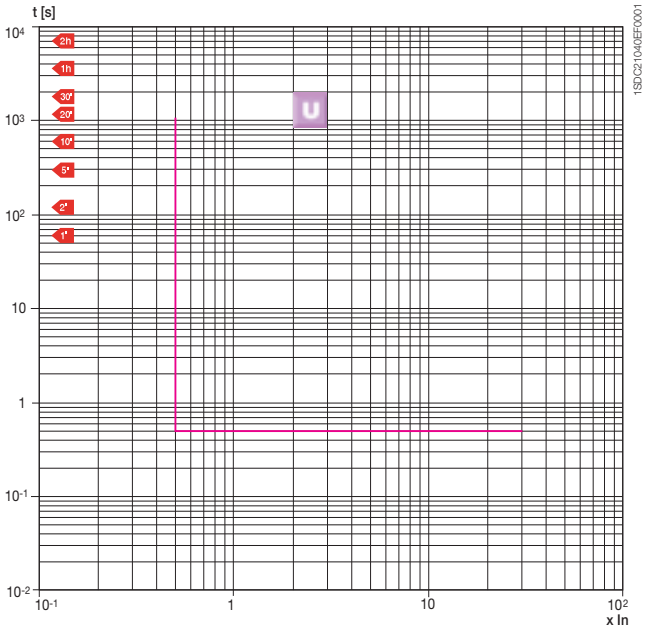

XT2-XT4 Ekip M-LRIU
L function
(hot and cold trip)

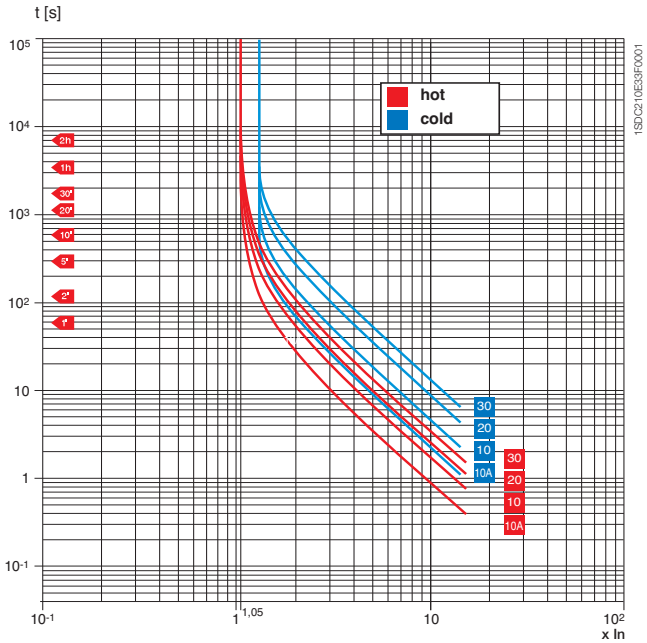

XT2-XT4 Ekip M-LRIU
L function
(hot trip with 1 or 2 phases supplied)

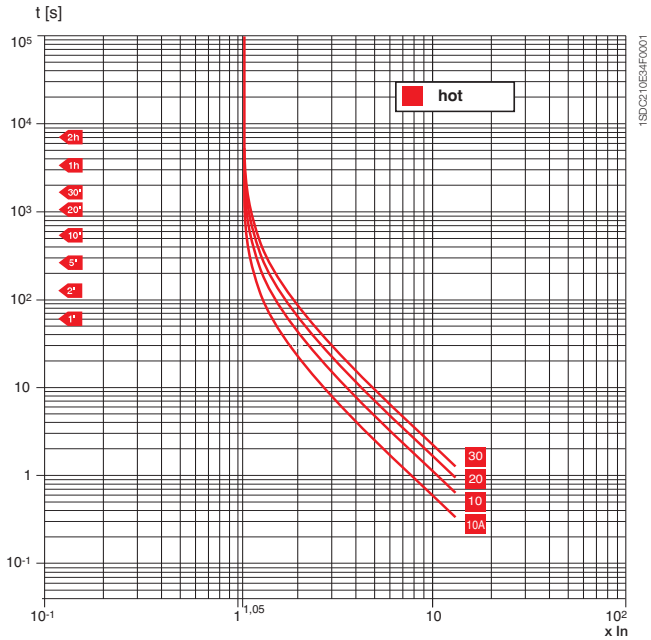

XT2-XT4 Ekip M-LRIU
I function

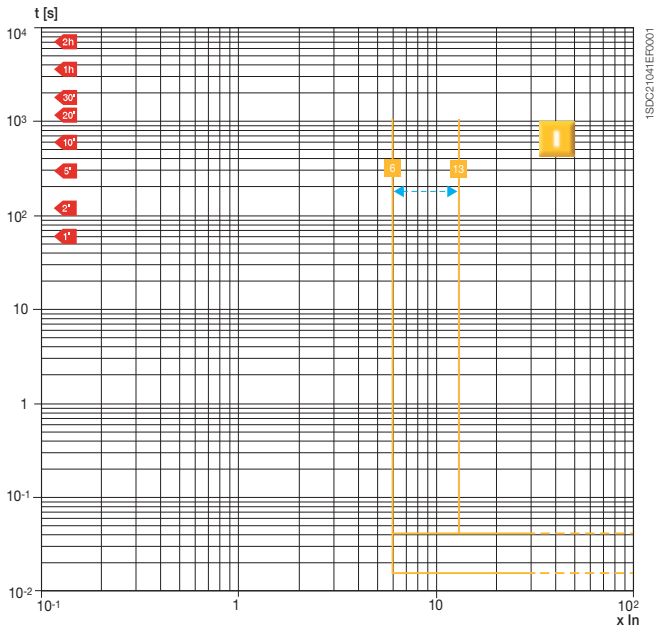

Trip curves with electronic trip unit

Trip curves for motor protection

XT2-XT4 Ekip M-LRIU
U function

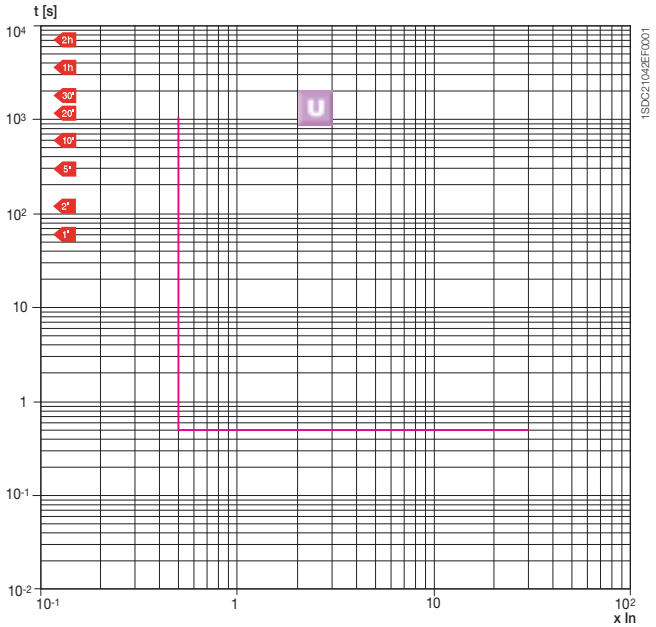

XT2-XT4 Ekip M-LRIU
R function

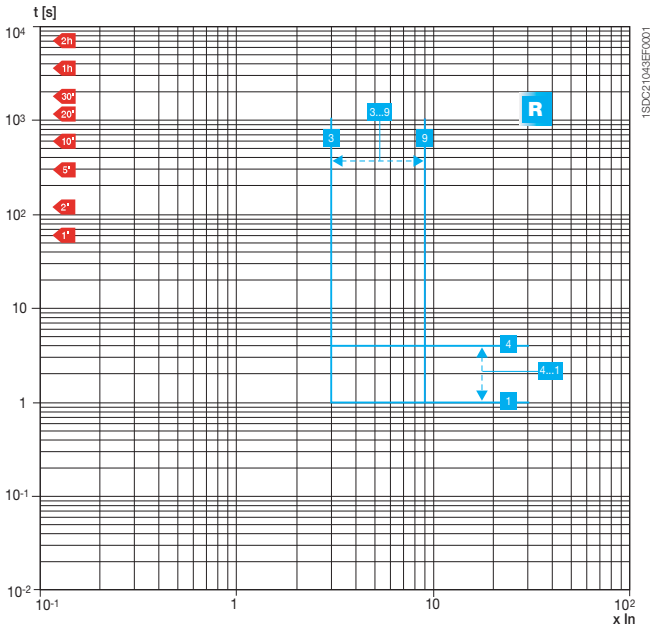

Trip curves with electronic trip unit

Trip curves for generator protection

XT2 Ekip G-LS/I
L-I functions

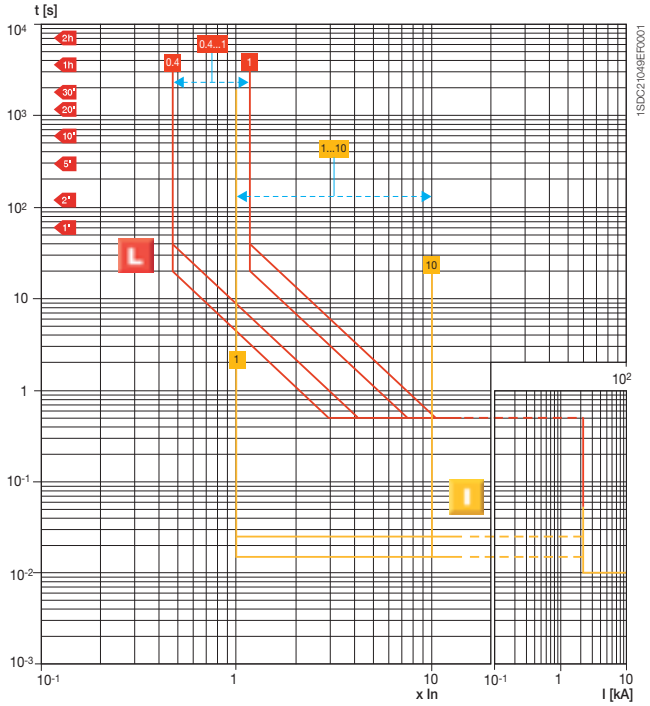

XT2 Ekip G-LS/I
L-S functions

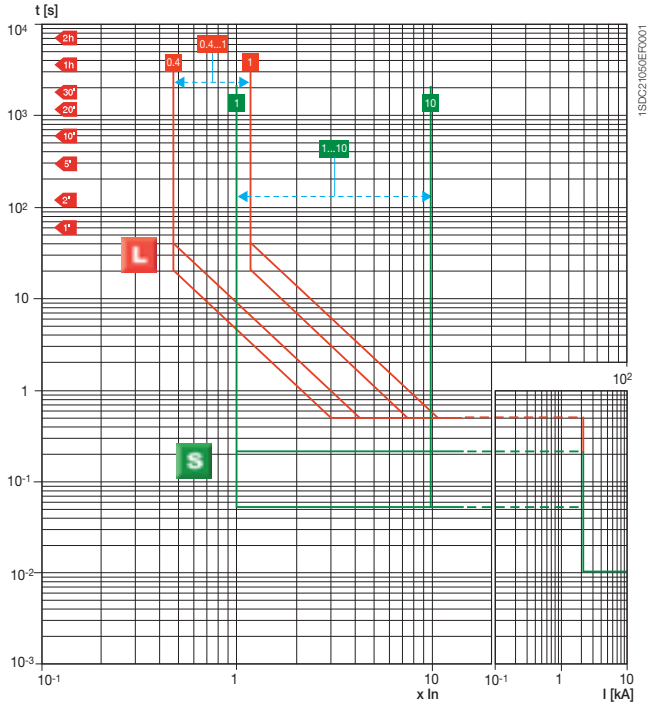

XT4 Ekip G-LS/I
L-I functions

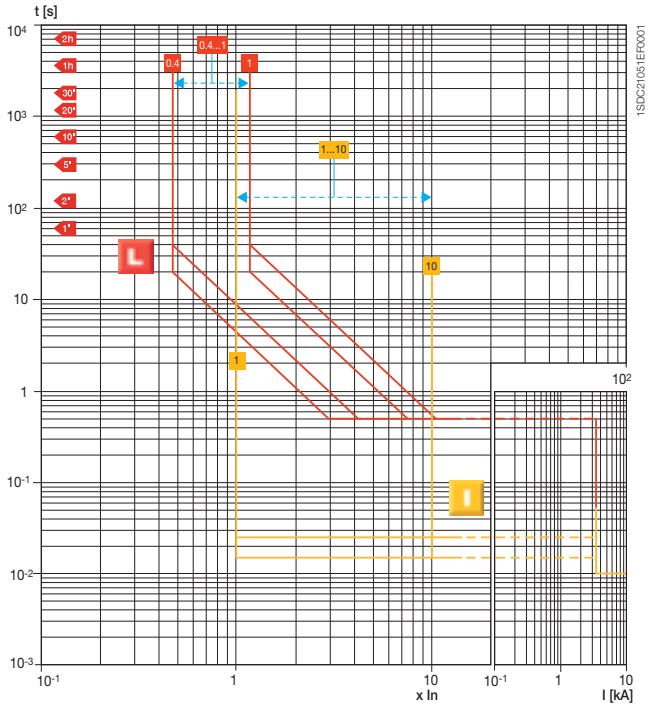

XT4 Ekip G-LS/I
L-S functions

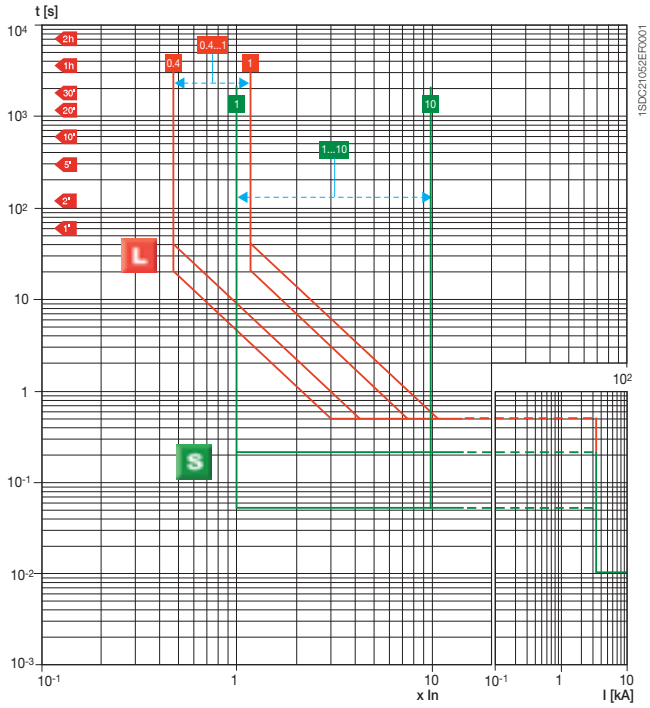

Trip curves with electronic trip unit

Trip curves for oversized neutral protection

XT2 Ekip N-LS/I
L-I functions

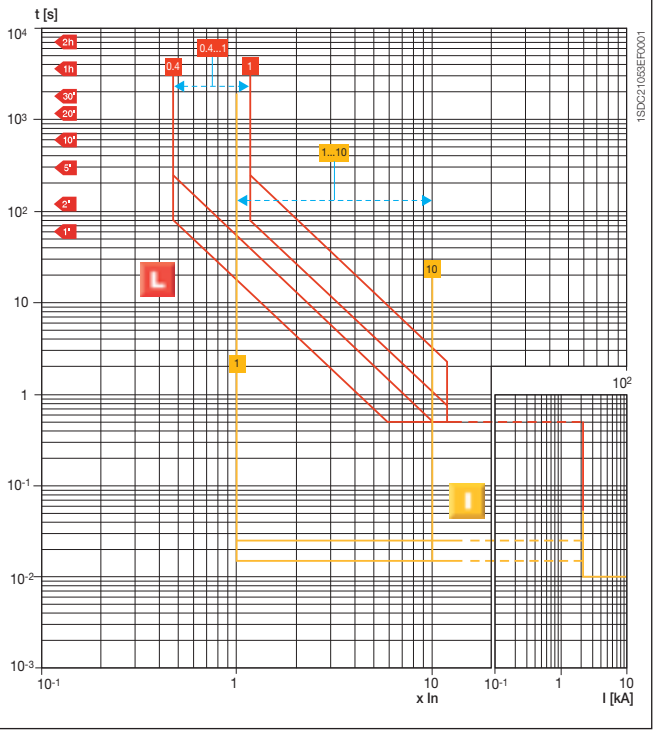

XT2 Ekip N-LS/I
L-S functions

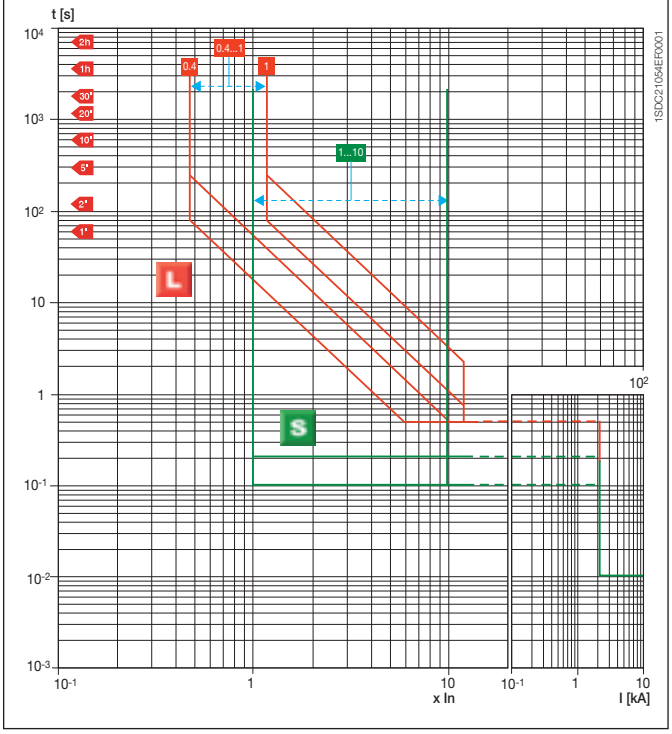

XT4 Ekip N-LS/I
L-I functions

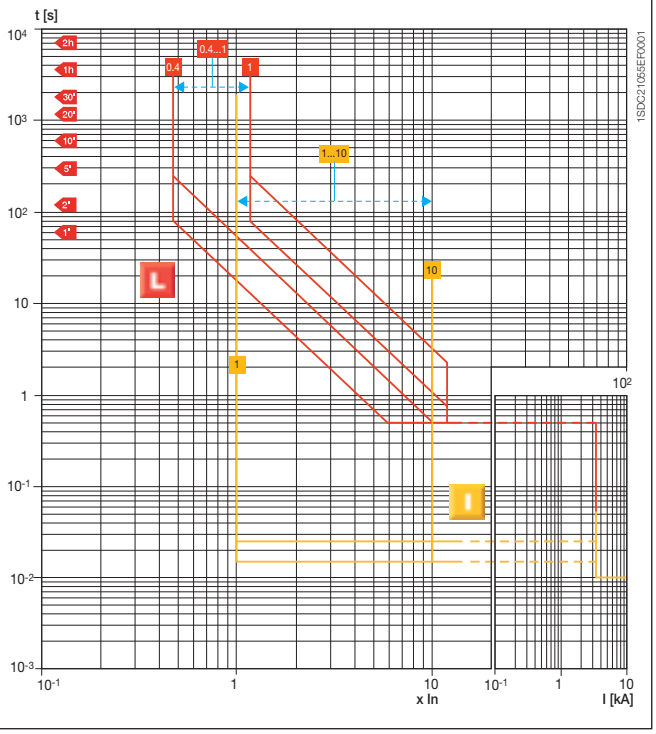

XT4 Ekip N-LS/I
L-S functions

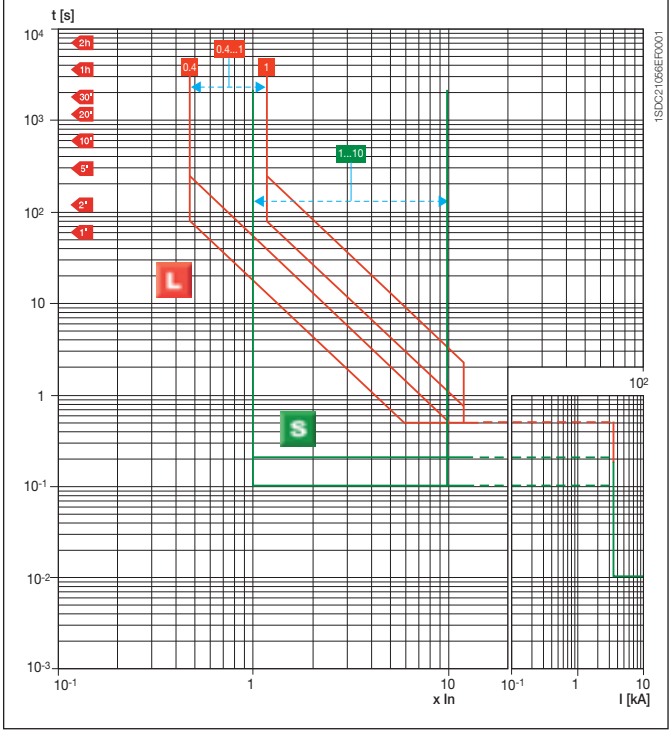

Specific let-through energy curves

240V

XT1

240V

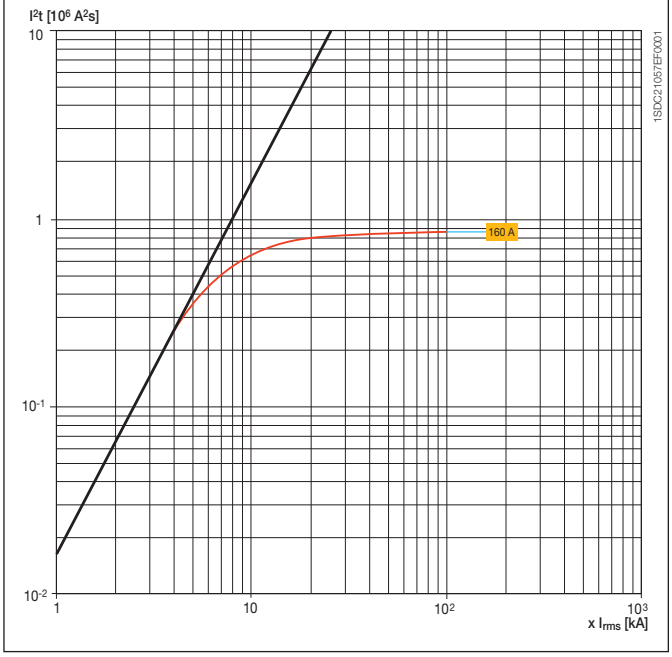

XT2

240V

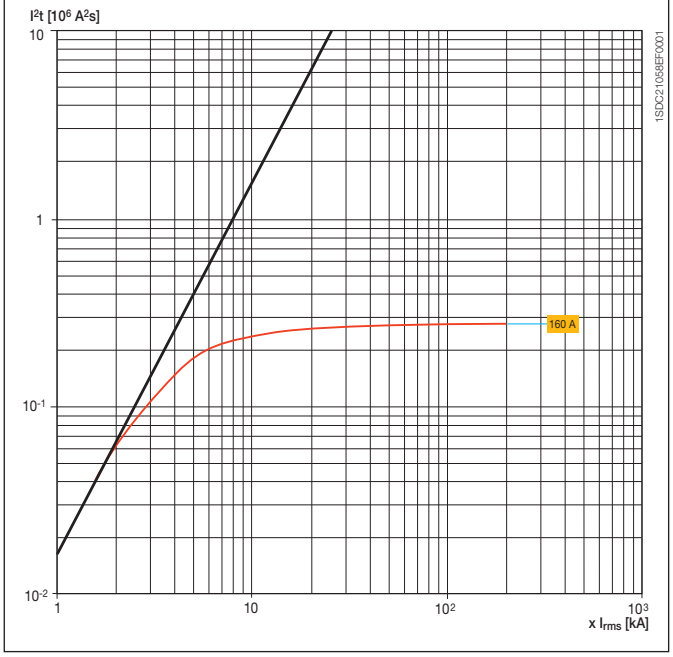

XT3

240V

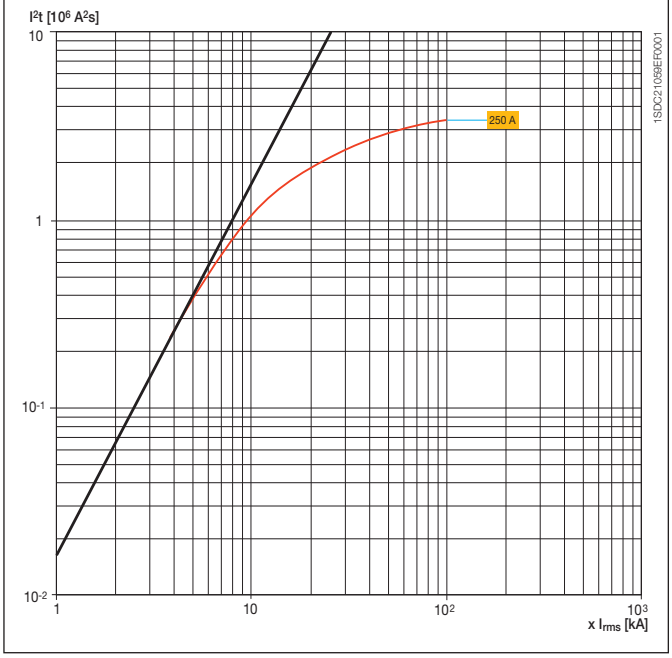

Specific let-through energy curves

415-440V

XT1

415-440V

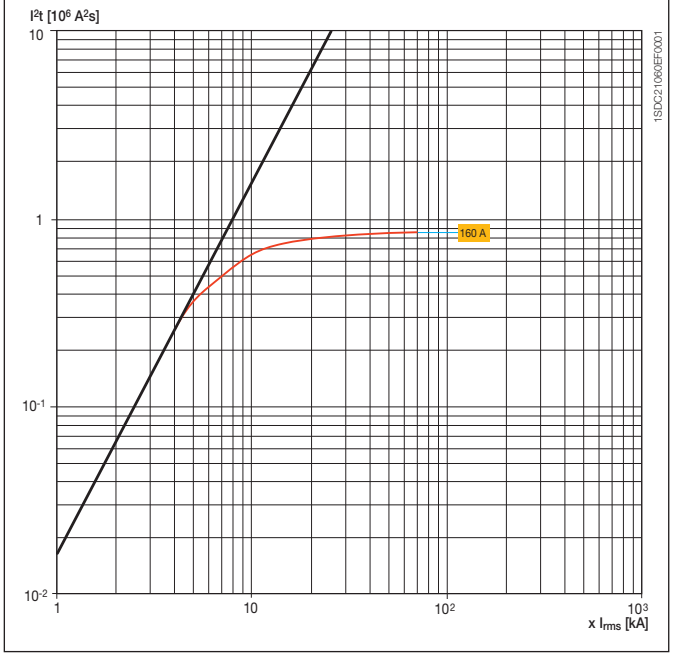

XT2

415-440V

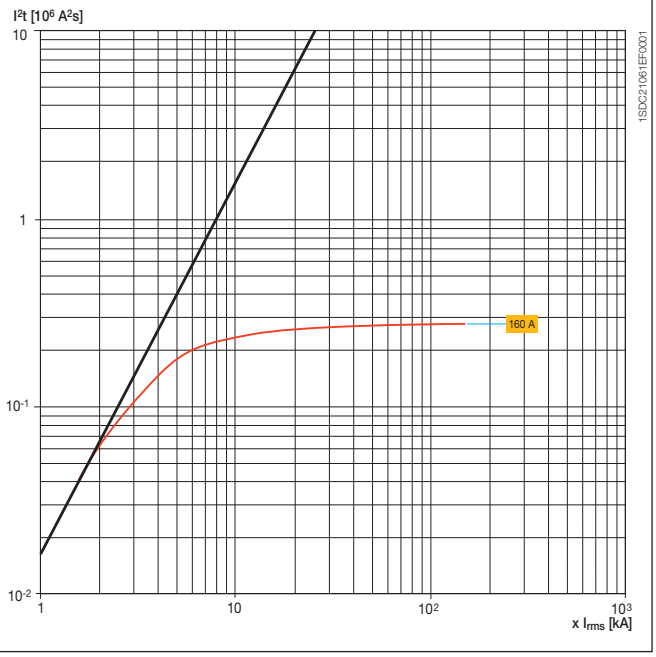

XT3

415-440V

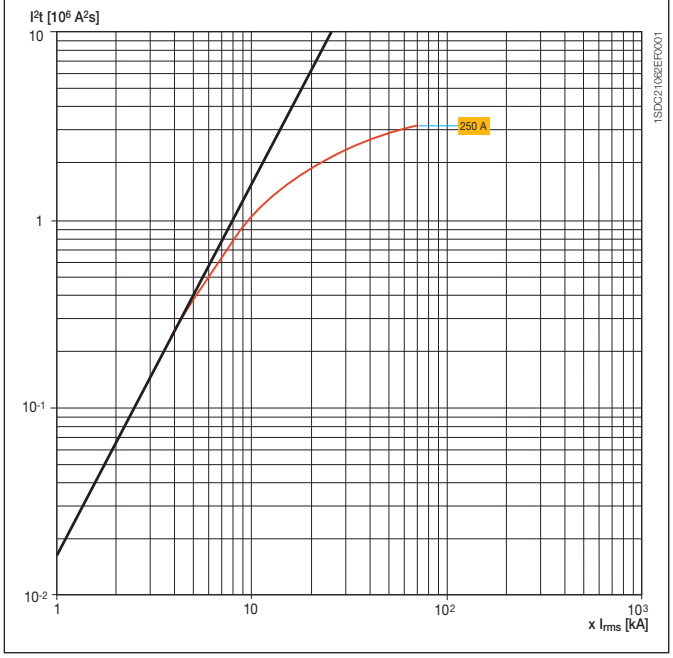

Specific let-through energy curves

500V

XT1

500V

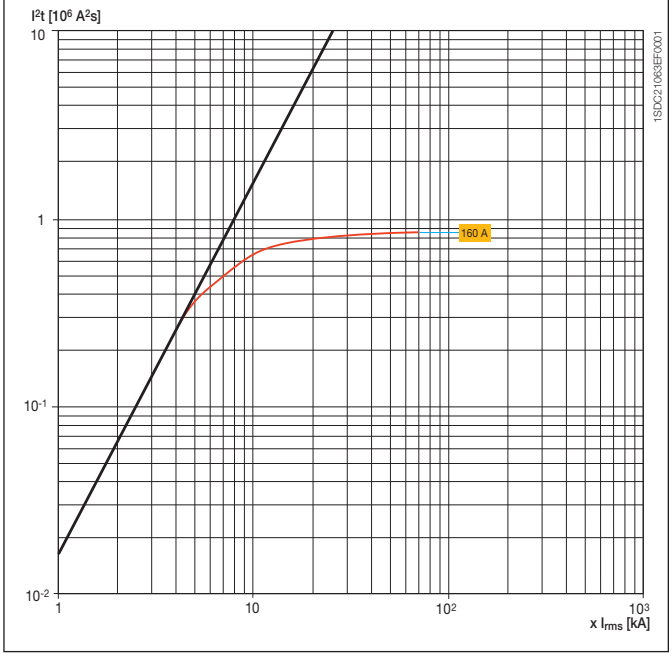

XT2

500V

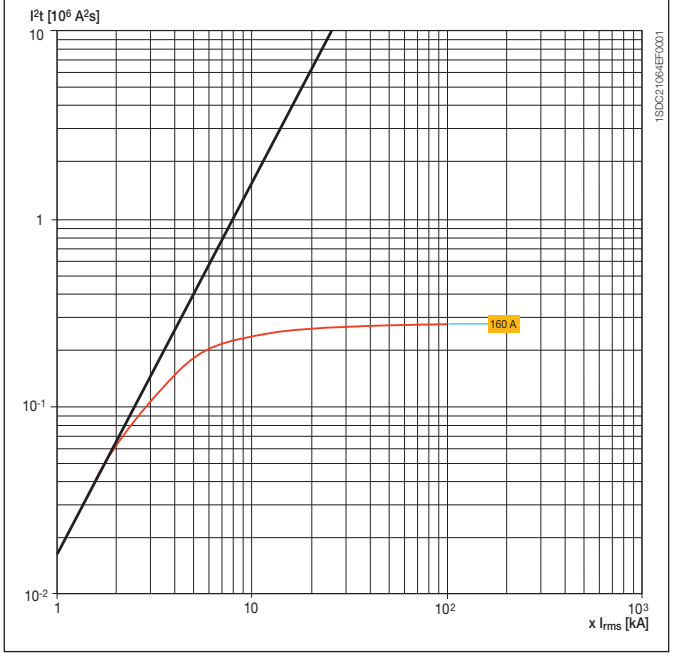

XT3

500V

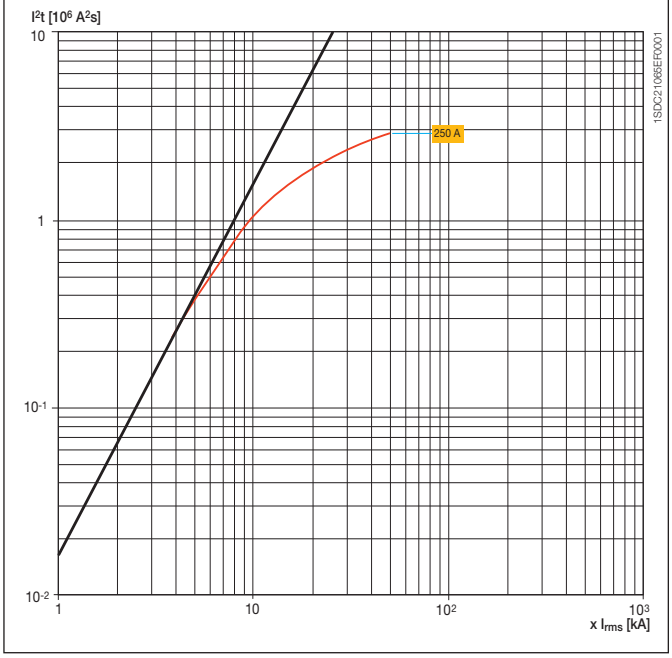

Specific let-through energy curves

690V

XT1

690V

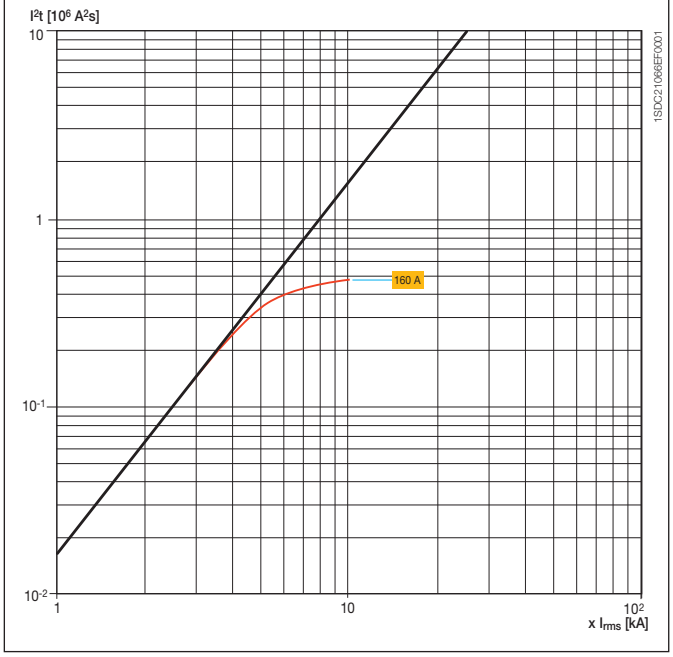

XT2

690V

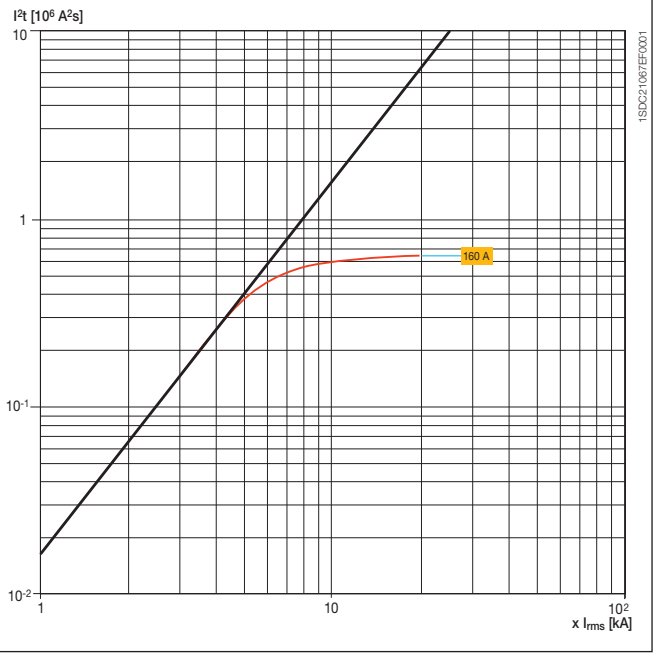

XT3

690V

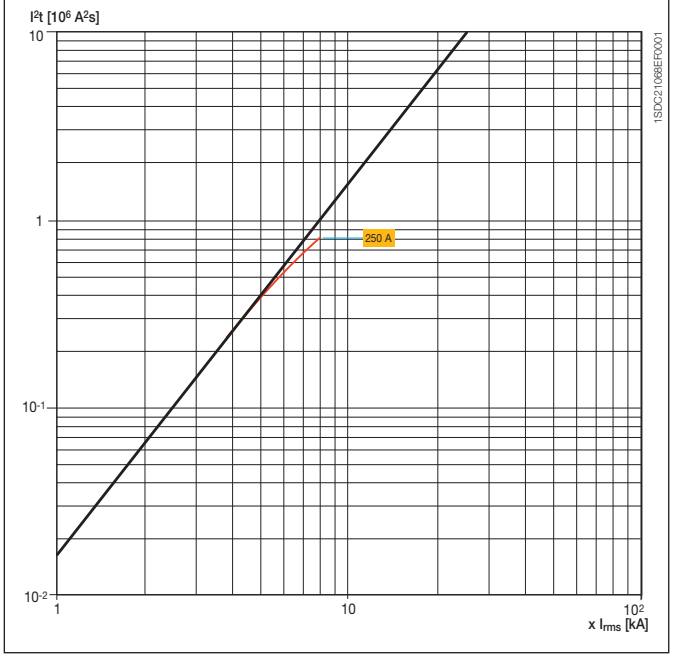

Limiting curves

240V

XT1

240V

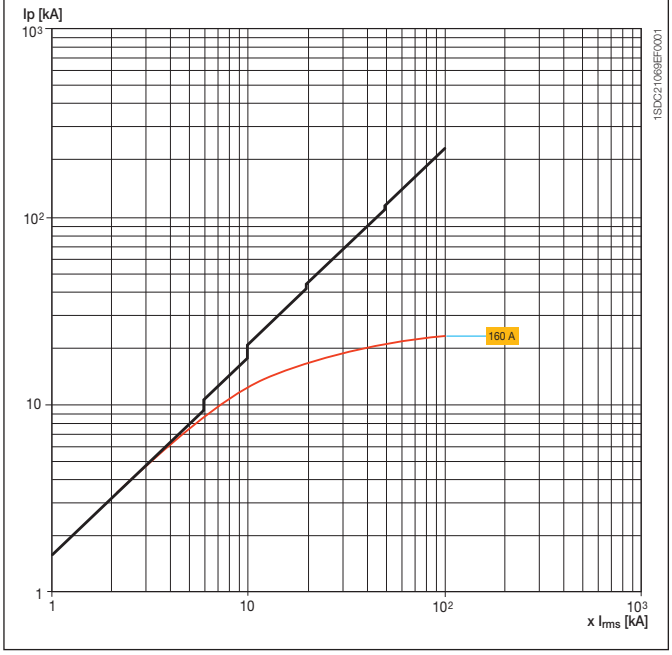

XT2

240V

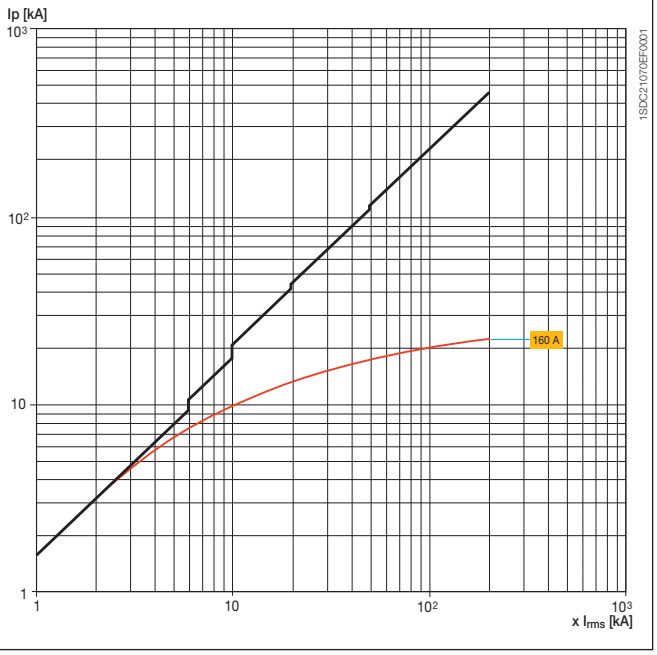

XT3

240V

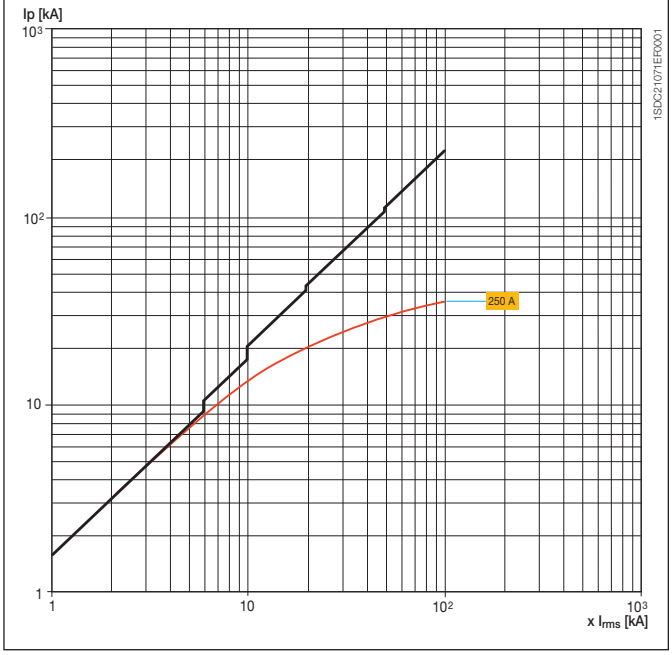

Limiting curves

415-440V

XT1

415-440V

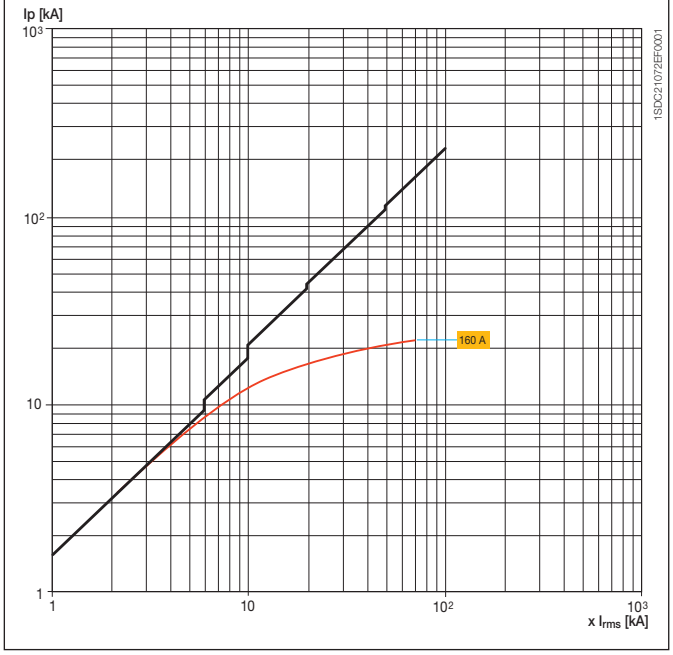

XT2

415-440V

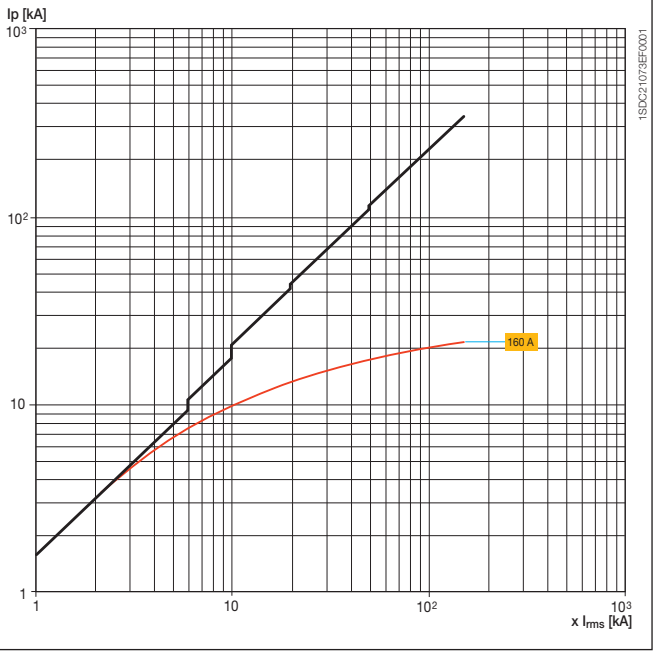

XT3

415-440V

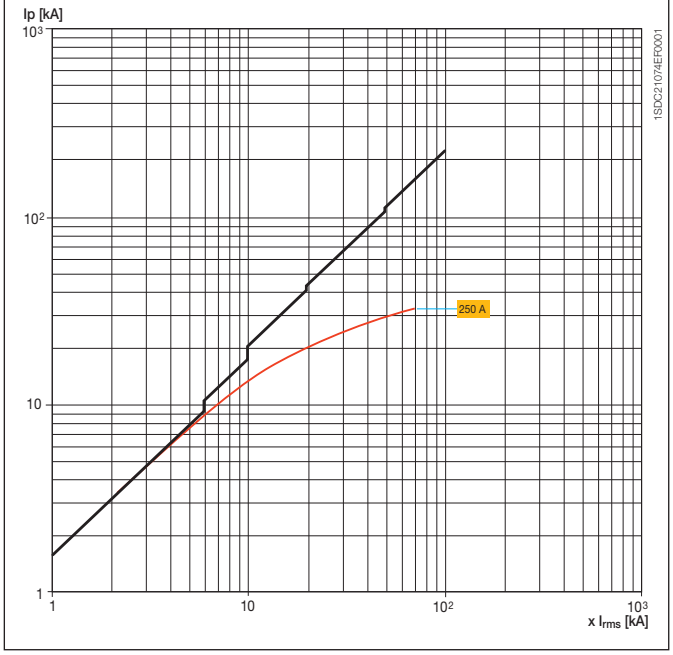

Limiting curves

500V

XT1

500V

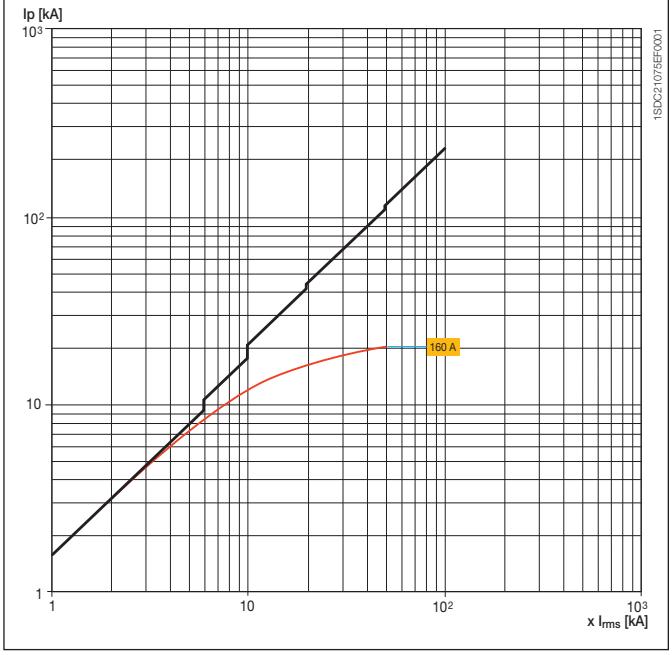

XT2

500V

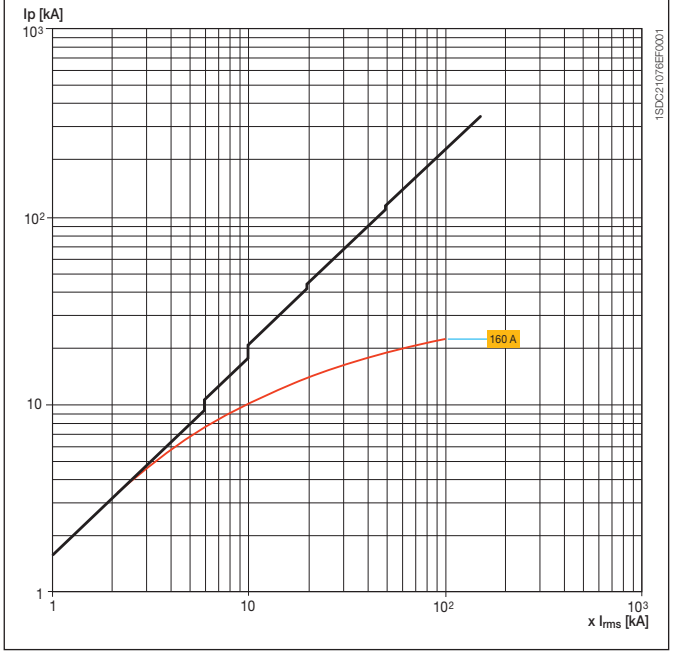

XT3

500V

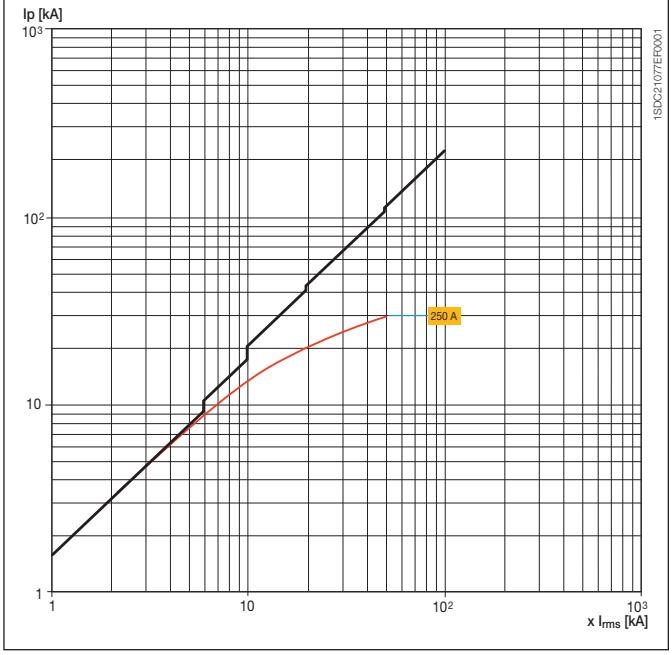

Limiting curves

690V

XT1

690V

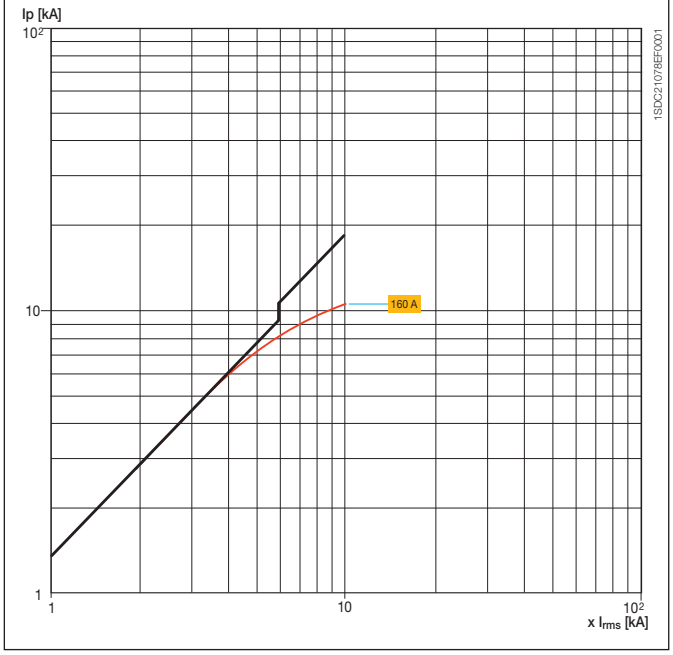

XT2

690V

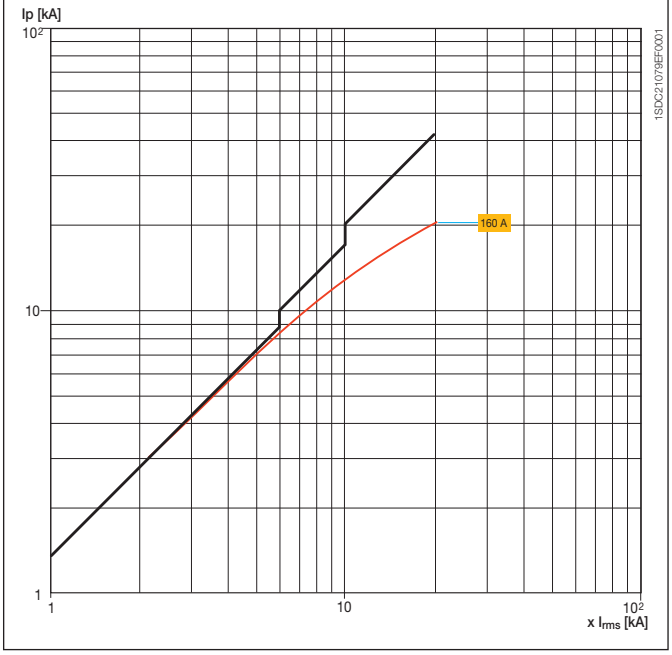

XT3

690V

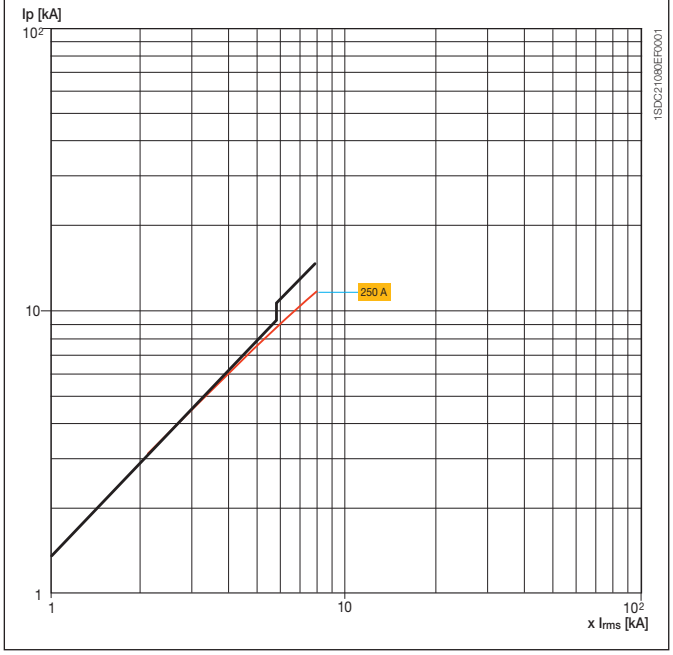

Temperature performances

All the Tmax XT circuit-breakers can be used under the following environmental conditions:

- -25°C +70°C: range of atmospheric temperature where the circuit-breaker is installed;
- -40°C +70°C: range of atmospheric temperature where the circuit-breaker is stored.

The circuit-breakers fitted with thermomagnetic trip unit have the thermal element set for a reference temperature of +40°C. With the same setting, for temperatures other than +40°C there is a variation in the thermal trip threshold as indicated in the tables below.

XT1 with thermomagnetic trip units

T amb (°C)	30		40		50		60		70	
In [A]	MIN [A]	MAX [A]	MIN [A]	MAX [A]	MIN [A]	MAX [A]	MIN [A]	MAX [A]	MIN [A]	MAX [A]
16	12	17	11.2	16	11	15	10	14	9	13
20	15	21	14	20	13	19	12	18	11	16
25	18	26	17.5	25	16	23	15	22	14	20
32	24	34	22.4	32	21	30	20	28	18	26
40	29	42	28	40	27	38	25	35	23	33
50	37	53	35	50	33	47	31	44	28	41
63	46	66	44.1	63	41	59	39	55	36	51
80	59	84	56	80	53	75	49	70	46	65
100	74	105	70	100	66	94	61	88	57	81
125	92	131	87.5	125	82	117	77	109	71	102
160	118	168	112	160	105	150	98	140	91	130

XT2 with thermomagnetic trip units

T amb (°C)	30		40		50		60		70	
In [A]	MIN [A]	MAX [A]	MIN [A]	MAX [A]	MIN [A]	MAX [A]	MIN [A]	MAX [A]	MIN [A]	MAX [A]
1.6	1.2	1.7	1.1	1.6	1.1	1.5	1.0	1.4	0.9	1.3
2	1.5	2.2	1.4	2.0	1.3	1.9	1.2	1.7	1.1	1.6
2.5	1.8	2.6	1.8	2.5	1.6	2.3	1.5	2.2	1.4	2.0
3	2.5	3.5	2.1	3.0	2.0	2.8	1.8	2.6	1.6	2.3
4	2.9	4.2	2.8	4.0	2.6	3.7	2.5	3.5	2.2	3.2
6.3	4.6	6.6	4.4	6.3	4.1	5.9	3.9	5.5	3.6	5.1
8	5.9	8.4	5.6	8.0	5.3	7.5	4.9	7.0	4.6	6.5
10	7.4	10.5	7.0	10.0	6.5	9.3	6.1	8.7	5.7	8.1
12.5	9.2	13.2	8.8	12.5	8.2	11.7	7.6	10.9	7.1	10.1
16	11.9	17.0	11.2	16.0	10.5	15.0	9.8	14.0	9.1	13.0
20	14.7	21.0	14.0	20.0	13.3	19.0	11.9	17.0	11.2	16.0
32	23.8	34.0	22.4	32.0	21.0	30.0	19.6	28.0	18.2	26.0
40	29.4	42.0	28.0	40.0	25.9	37.0	24.5	35.0	22.4	32.0
50	37.1	53.0	35.0	50.0	32.9	47.0	30.1	43.0	28.0	40.0
63	46.2	66.0	44.1	63.0	41.3	59.0	38.5	55.0	35.7	51.0
80	58.8	84.0	56.0	80.0	52.5	75.0	49.0	70.0	45.5	65.0
100	73.5	105.0	70.0	100.0	65.1	93.0	60.9	87.0	56.7	81.0
125	92.4	132.0	87.5	125.0	81.9	117.0	76.3	109.0	70.7	101.0
160	117.6	168.0	112.0	160.0	105.0	150.0	97.3	139.0	90.3	129.0

XT3 with thermomagnetic trip units

T amb (°C)	30		40		50		60		70	
In [A]	MIN [A]	MAX [A]	MIN [A]	MAX [A]	MIN [A]	MAX [A]	MIN [A]	MAX [A]	MIN [A]	MAX [A]
63	46	66	44	63	41	59	39	55	36	51
80	59	84	56	80	53	75	48	69	45	64
100	74	105	70	100	65	93	61	87	56	80
125	92	132	88	125	81	116	76	108	70	100
160	118	168	112	160	104	149	97	139	90	129
200	148	211	140	200	130	186	121	173	113	161
250	184	263	175	250	163	233	151	216	141	201

Temperature performances

XT4 with thermomagnetic trip units

T amb (°C)	30		40		50		60		70	
In [A]	MIN[A]	MAX [A]	MIN[A]	MAX [A]	MIN[A]	MAX [A]	MIN[A]	MAX [A]	MIN[A]	MAX [A]
16	12	17	11	16	10	14	9	13	8	12
20	16	23	14	20	12	17	11	15	9	13
25	19	27	18	25	16	23	15	21	13	19
32	25	36	22	32	19	27	17	24	15	21
40	30	43	28	40	26	37	24	34	21	30
50	38	54	35	50	32	46	29	42	27	39
63	47	67	44	63	41	58	37	53	33	48
80	60	86	56	80	52	74	46	66	41	58
100	74	106	70	100	67	95	60	85	53	75
125	94	134	88	125	81	115	74	105	67	95
160	118	168	112	160	105	150	96	137	91	130
200	147	210	140	200	133	190	123	175	112	160
225	168	241	158	225	146	208	133	190	119	170
250	183	262	175	250	168	240	161	230	154	220

The electronic overcurrent trip units do not undergo any variations in performance as the temperature varies.
However, even if heating does not affect the trip thresholds of the electronic trip units, in the case of temperatures exceeding +40°C it is advisable to reduce the maximum setting for protection against overloads (L) to preserve the copper parts of the circuit-breaker against high temperatures.
The same considerations can be done about the switch-disconnectors and magnetic only circuit-breakers.
The table and graph below show the maximum adjustment at which the threshold I_1 of the overcurrent protection (L) must be set according to the ambient temperature and to the type of terminals used.

XT1 - Fixed circuit-breakers with only magnetic trip unit or switch-disconnectors

	40°C	50°C	60°C	70°C
	Imax [A]	Imax [A]	Imax [A]	Imax [A]
F	160	160	153	136

F = Front flat terminals

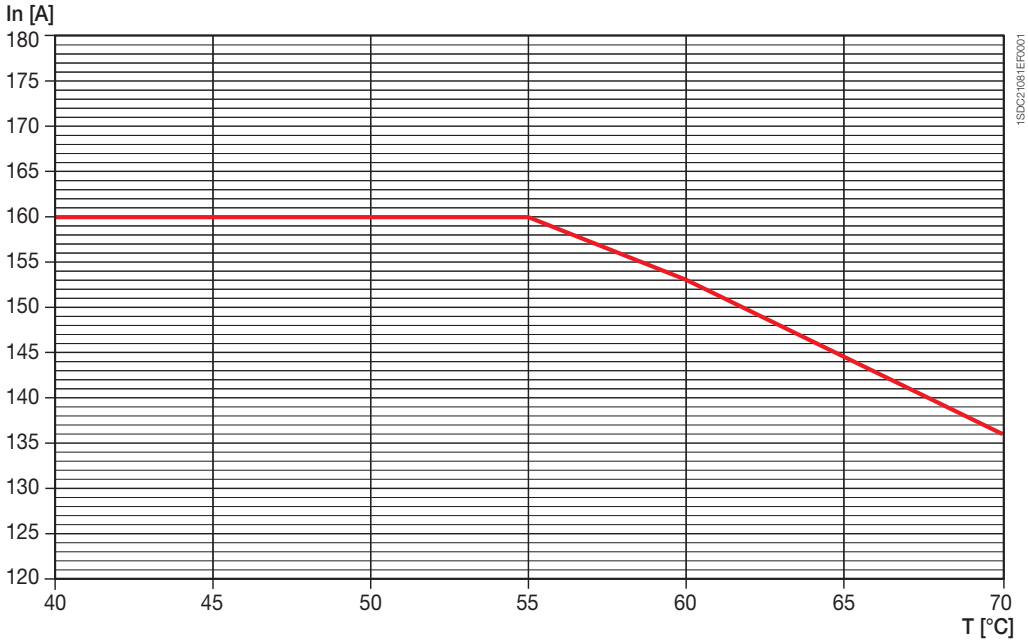

XT2 - Fixed circuit-breakers with only magnetic and electronic trip unit

	40°C	50°C	60°C	70°C
	Imax [A]	Imax [A]	Imax [A]	Imax [A]
F	160	160	146	131

F = Front flat terminals

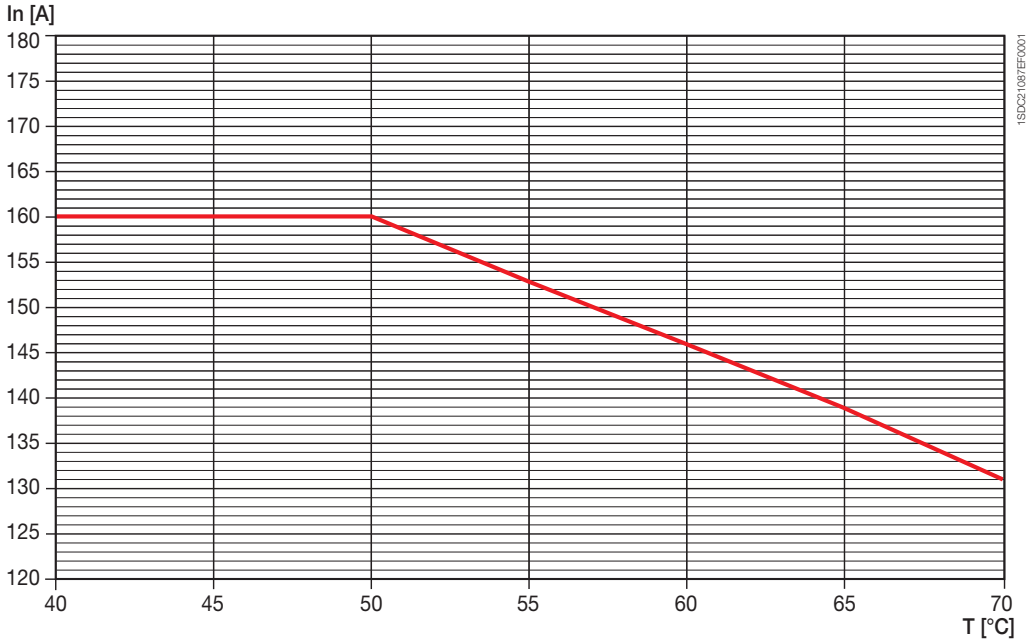

XT3 - Fixed circuit-breakers with only magnetic trip unit or switch-disconnectors

	40°C	50°C	60°C	70°C
	Imax [A]	Imax [A]	Imax [A]	Imax [A]
F	250	250	228	204

F = Front flat terminals

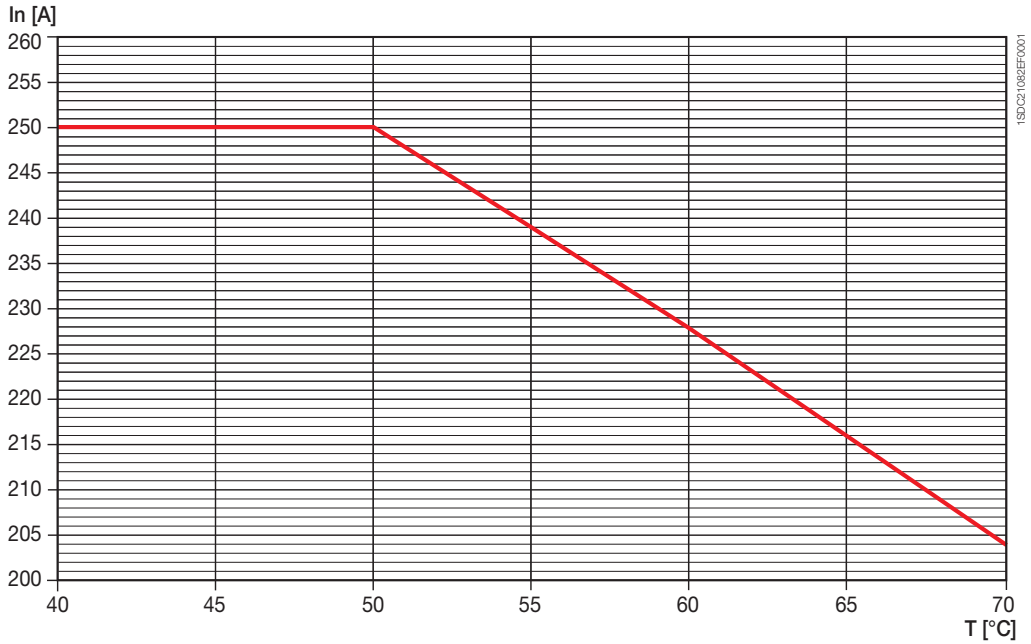

Temperature performances

XT4 - Fixed circuit-breakers with only magnetic, electronic trip unit and switch-disconnector				
	40°C	50°C	60°C	70°C
	Imax [A]	Imax [A]	Imax [A]	Imax [A]
F	250	250	238	213

F = Front flat terminals

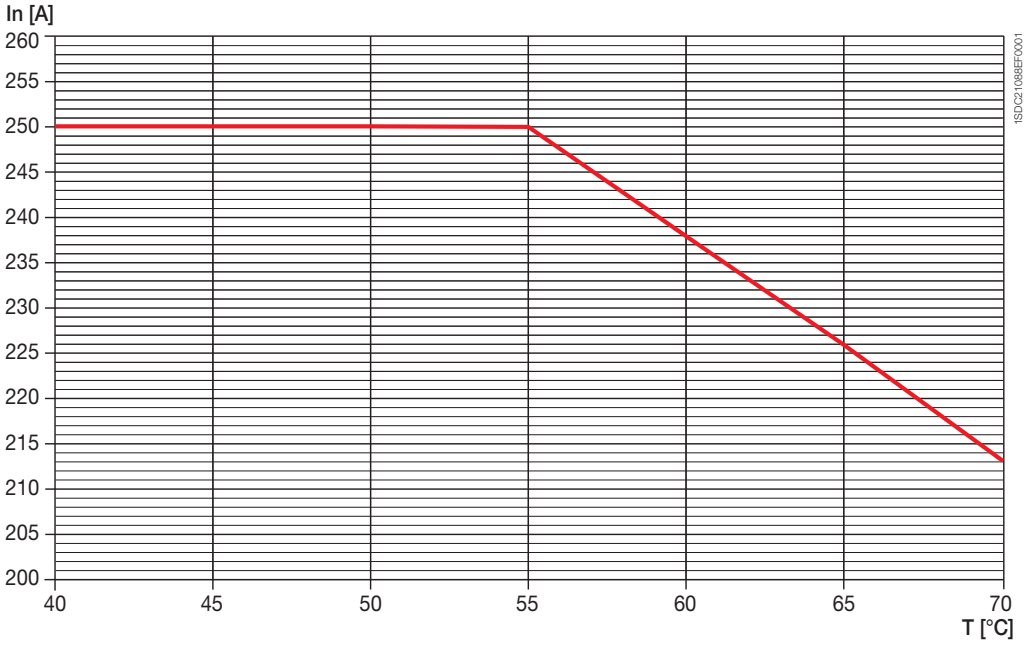

Dissipated powers

To ensure service continuity of the plants, how to keep the temperature within acceptable levels for operation of the various devices and not only for the circuit-breakers must be carefully assessed, for example with recourse to forced ventilation in the switchboards and in the rooms where they are installed.
The table gives the dissipated power values per single pole at the rated current In for each circuit-breaker used. The total maximum dissipated power for a circuit-breaker used at 50/60Hz is equal to the power per single pole multiplied by the number of poles.

Power [W/pole]	In [A]	XT1		XT2		XT3		XT4	
		F	P	F	P/W	F	P	F	P/W
TMD TMA TMG MF MA	1.6			2.00	2.38				
	2			2.38	2.76				
	2.5			2.47	2.85				
	3			2.76	3.23				
	4			2.47	2.85				
	6.3			3.33	3.90				
	8			2.57	3.04				
	10			2.95	3.42				
	12.5			1.05	1.24				
	16	1.50	1.60	1.33	1.52				
	20	1.80	2.00	1.62	1.90				
	25	2.00	2.80						
	32	2.10	3.20	2.57	3.04			4.44	4.44
	40	2.60	4.60	3.71	4.37			4.49	4.72
	50	3.70	5.00	4.09	4.75			4.68	4.92
	63	4.30	6.00	4.85	5.70	4.30	5.10	5.30	5.76
	80	4.80	7.20	5.80	6.84	4.80	5.80	5.52	6.00
	100	7.00	10.00	8.08	9.50	5.60	6.80	6.24	6.96
	125	10.70	14.70	11.40	13.97	6.60	7.90	7.44	8.64
	160	15.00	20.00	16.15	19.00	7.90	9.50	8.88	10.80
	200					13.20	15.80	11.88	14.88
	250					17.80	21.40	16.44	21.12

Overall dimensions

Index

Tmax XT1 - Installation for fixed circuit-breaker **5**/2
Tmax XT1 - Terminals for fixed circuit-breaker **5**/5
Tmax XT1 - Accessories for fixed circuit-breaker **5**/8
Tmax XT1 - Installation for plug-in circuit-breaker **5**/14
Tmax XT1 - Terminals for plug-in circuit-breaker **5**/17
Tmax XT1 - Accessories for plug-in circuit-breaker **5**/20

Tmax XT2 - Installation for fixed circuit-breaker **5**/21
Tmax XT2 - Terminals for fixed circuit-breaker **5**/24
Tmax XT2 - Accessories for fixed circuit-breaker **5**/28
Tmax XT2 - Installation for plug-in circuit-breaker **5**/33
Tmax XT2 - Terminals for plug-in circuit-breaker **5**/36
Tmax XT2 - Accessories for plug-in circuit-breaker **5**/40
Tmax XT2 - Installation for withdrawable circuit-breaker **5**/43
Tmax XT2 - Terminals for withdrawable circuit-breaker **5**/46
Tmax XT2 - Accessories for withdrawable circuit-breaker **5**/50

Tmax XT3 - Installation for fixed circuit-breaker **5**/55
Tmax XT3 - Terminals for fixed circuit-breaker **5**/58
Tmax XT3 - Accessories for fixed circuit-breaker **5**/62
Tmax XT3 - Installation for plug-in circuit-breaker **5**/67
Tmax XT3 - Terminals for plug-in circuit-breaker **5**/70
Tmax XT3 - Accessories for plug-in circuit-breaker **5**/74

Tmax XT4 - Installation for fixed circuit-breaker **5**/75
Tmax XT4 - Terminals for fixed circuit-breaker **5**/78
Tmax XT4 - Accessories for fixed circuit-breaker **5**/83
Tmax XT4 - Installation for plug-in circuit-breaker **5**/88
Tmax XT4 - Terminals for plug-in circuit-breaker **5**/92
Tmax XT4 - Accessories for plug-in circuit-breaker **5**/96
Tmax XT4 - Installation for withdrawable circuit-breaker **5**/98
Tmax XT4 - Terminals for withdrawable circuit-breaker **5**/101
Tmax XT4 - Accessories for withdrawable circuit-breaker **5**/106

Distances to be respected **5**/109

Overall dimensions

Tmax XT1 - Installation for fixed circuit-breaker

Fixing on support sheet

Caption

(2) Overall dimension of optional wiring ducts

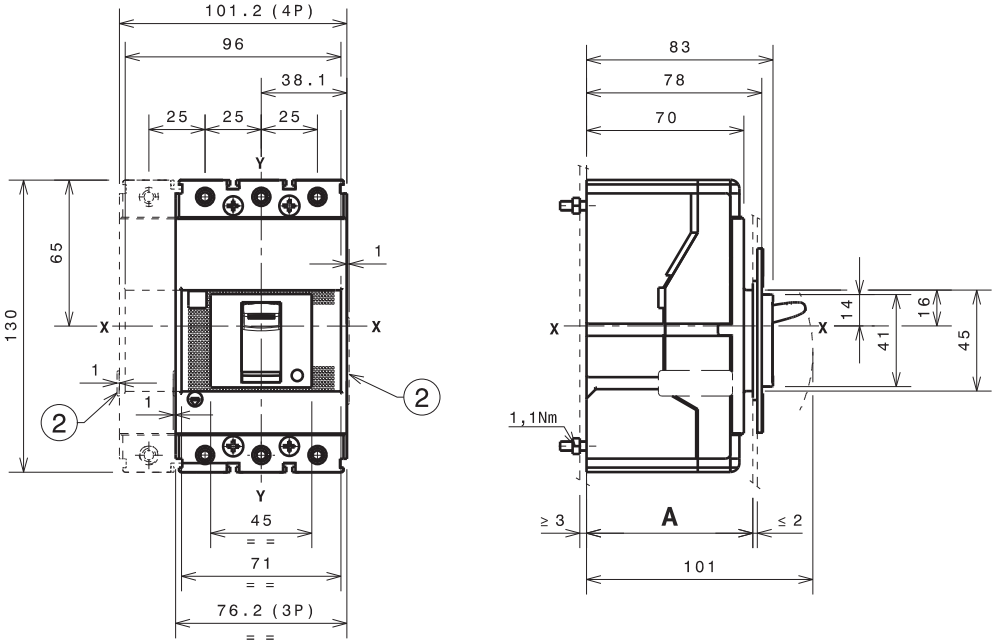

		A
With standard flange	III - IV	74
Without flange	III - IV	71
	III - IV	79

Fixing on DIN 50022 rail

Caption

(1) Bracket for fixing

(2) Overall dimension of optional wiring ducts

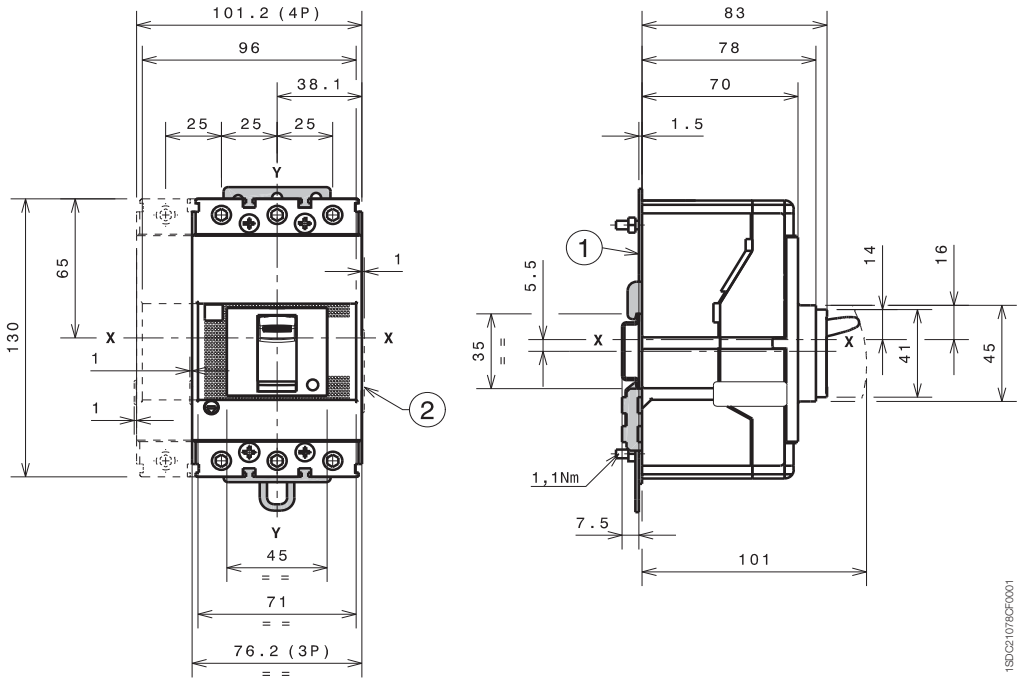

Drilling template for circuit-breaker fixing

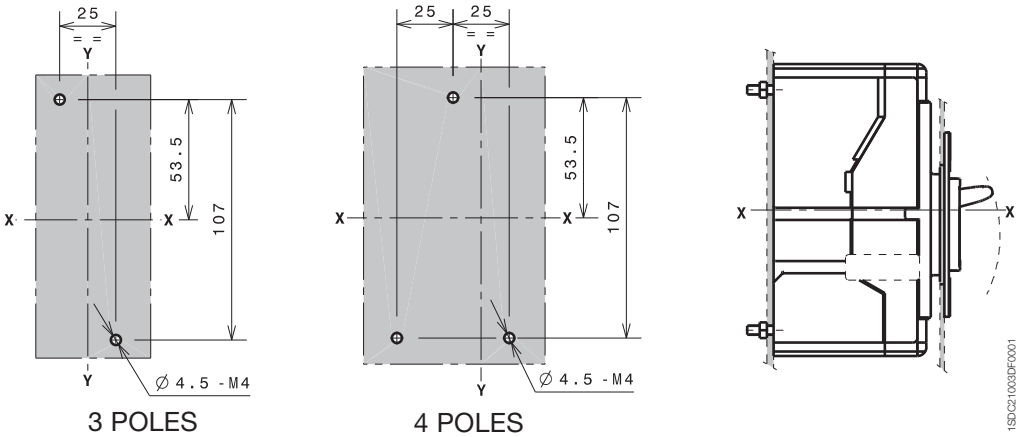

Flanges

Caption

1. Flange for circuit-breaker III
2. Flange for circuit-breaker IV
3. Flange for circuit-breaker III with RC Sel - RC Inst residual current release
4. Flange for circuit-breaker IV with RC Sel - RC Inst residual current release
5. Flange for fixed circuit-breaker III-IV with direct motor operator (MOD)
6. Flange for circuit-breaker III-IV with direct rotary handle (RHD)
7. Optional flange

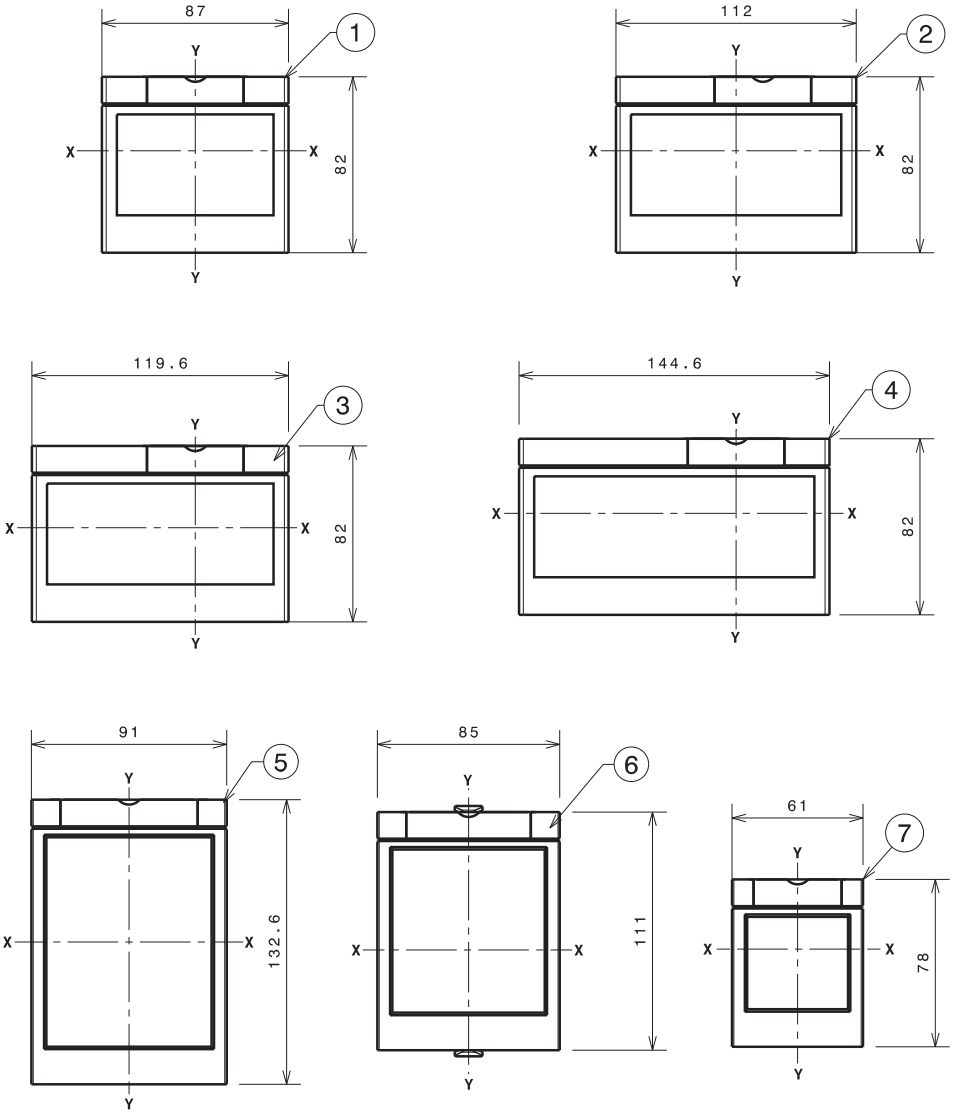

Overall dimensions

Tmax XT1 - Installation for fixed circuit-breaker

Drilling templates compartment door

With standard flange

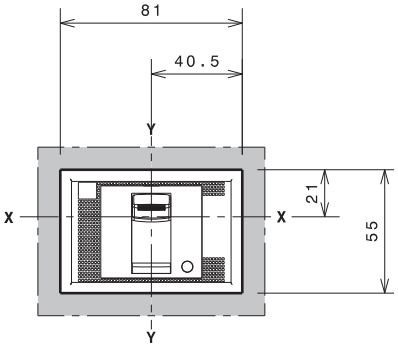

A=74
3 POLES

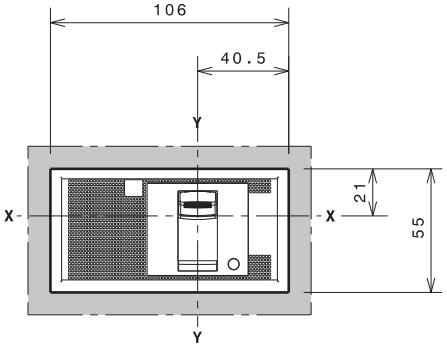

A=74
4 POLES

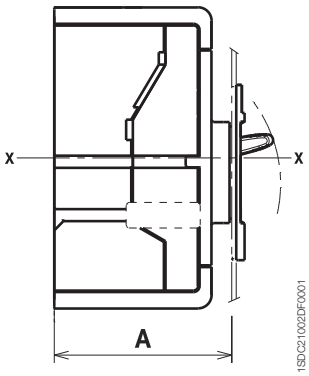

Without flange

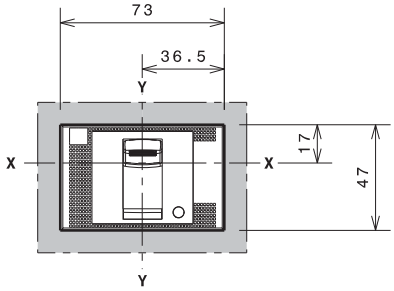

A=71
3 POLES

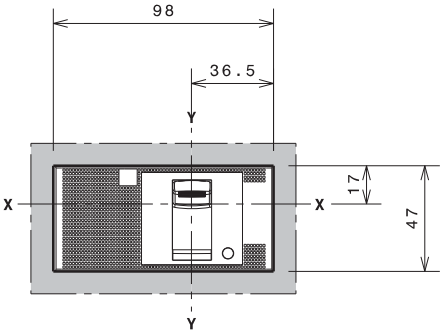

A=71
4 POLES

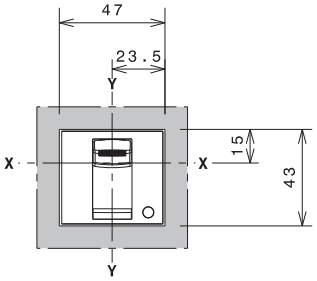

A=79
3-4 POLES

With optional flange

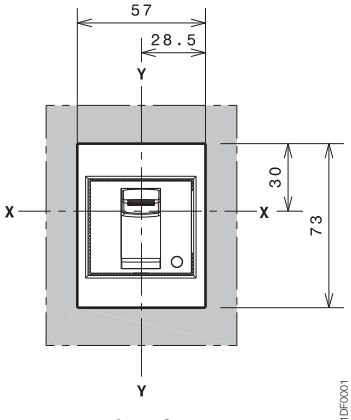

A=79
3-4 POLES

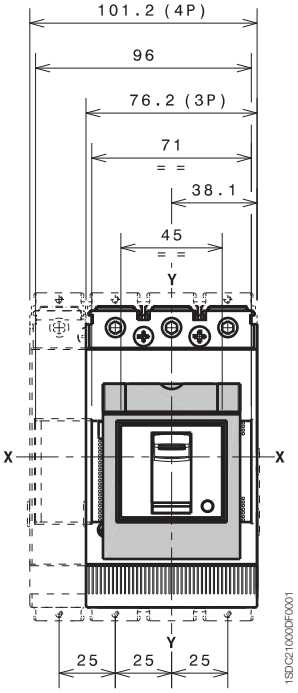

Overall dimensions

Tmax XT1 - Terminals for fixed circuit-breaker

Terminals F

Caption

(1) Front terminals for busbars connection

Note: 25mm insulating barriers between phases (compulsory) provided

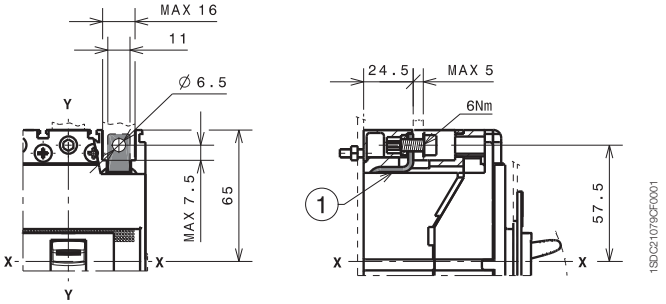

Terminals EF

Caption

(2) Front extended terminals

(3) High terminal covers with degree of protection IP40 (optional) not provided

(5) 100mm insulating barriers between phases (compulsory) provided

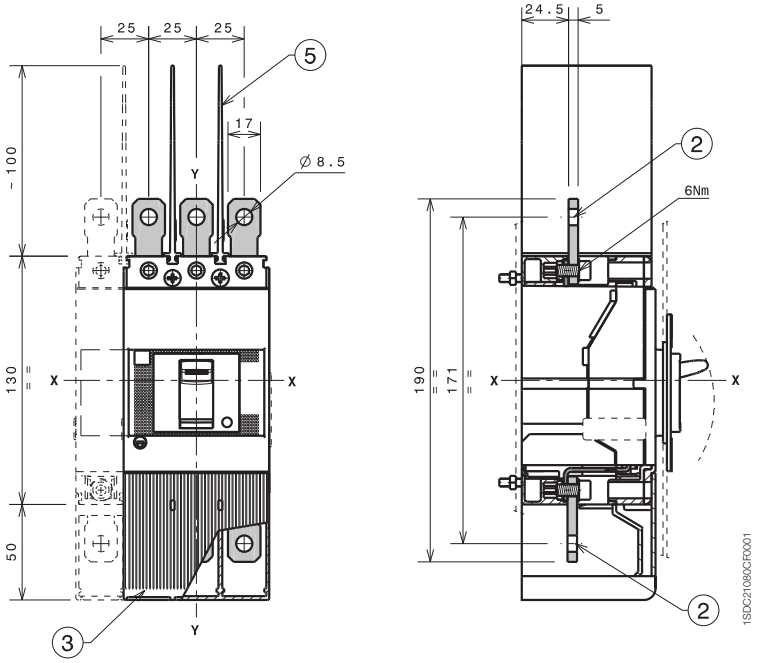

Terminals ES

Caption

(4) Front extended spread terminals for busbar connection

(6) 200mm insulating barriers between phases (compulsory) provided

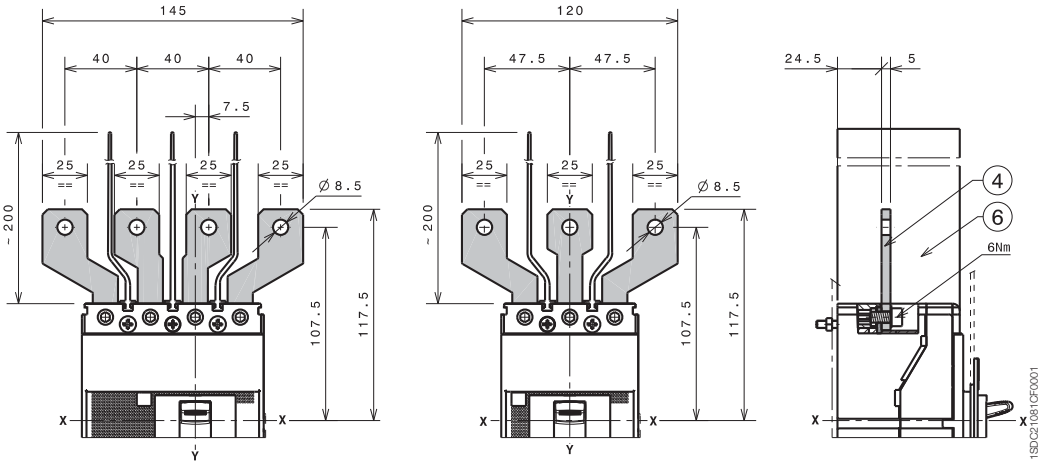

Overall dimensions

Tmax XT1 - Terminals for fixed circuit-breaker

1x1.5...50mm² terminals FCCuAl

Caption

1. 1x1.5...50mm² front terminal FCCuAl
3. 25mm insulating barriers between phases (compulsory) provided

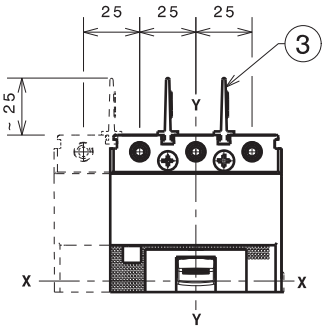

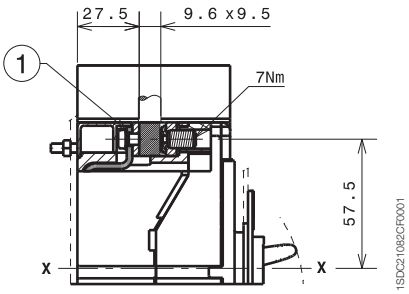

1x35...95mm² terminals FCCuAl

Caption

1. External terminal FCCuAl
2. High terminal covers with degree of protection IP40 (optional) provided

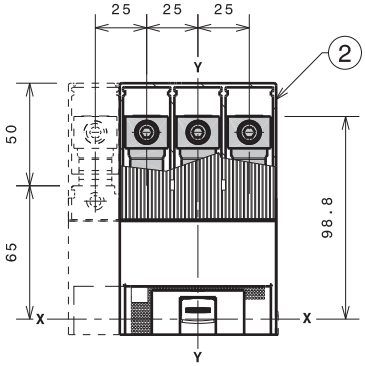

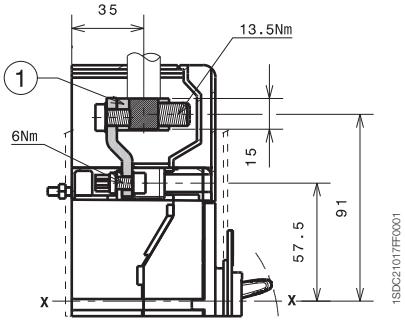

Terminals FCCu

Caption

2. Front terminal FCCuAl

Note: 25mm insulating barriers between phases (compulsory) provided as standard with the circuit-breaker

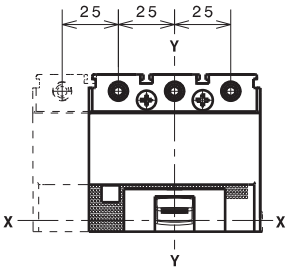

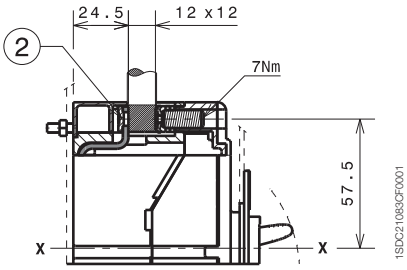

Terminals MC

Caption

4. Terminal covers with degree of protection IP40 (optional) provided
5. Front terminal for multicable connection

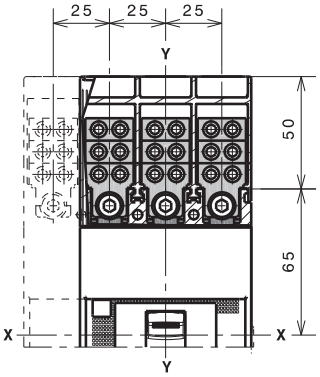

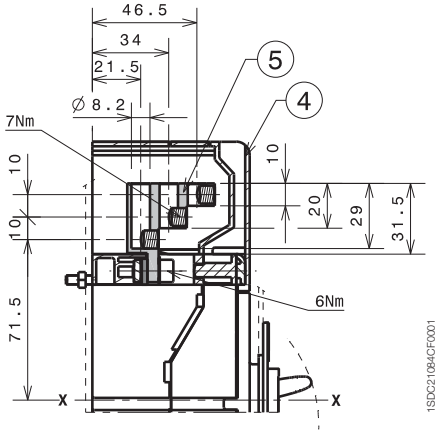

Terminals R

Caption

1. Adjustable rear terminals
2. Bottom terminal covers with degree of protection IP30 (optional) not provided
3. Drilling template for circuit-breaker III fixing on sheet
4. Drilling template for circuit-breaker IV fixing on sheet

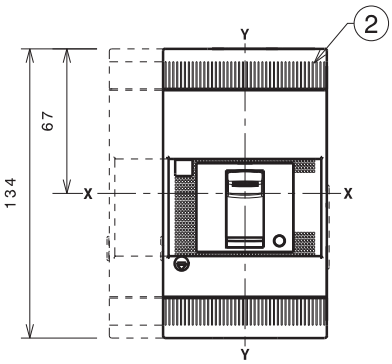

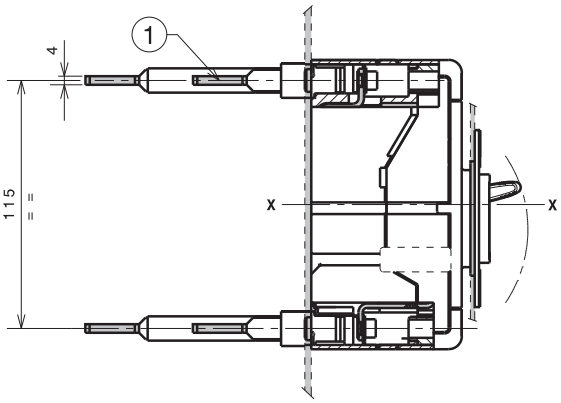

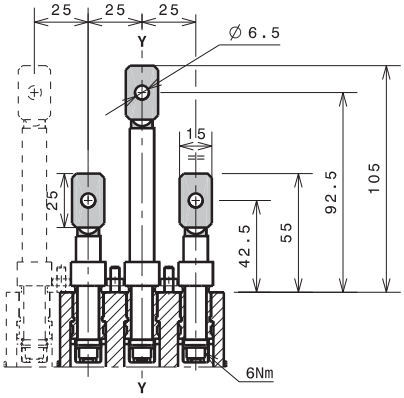

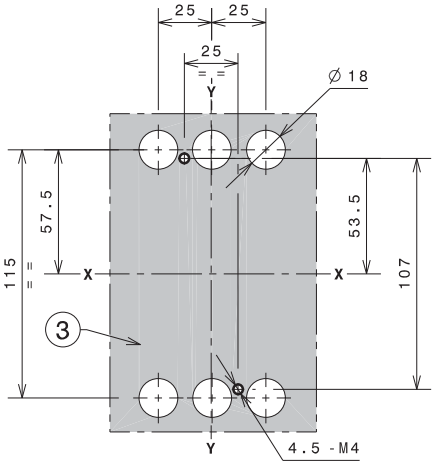

3 POLES

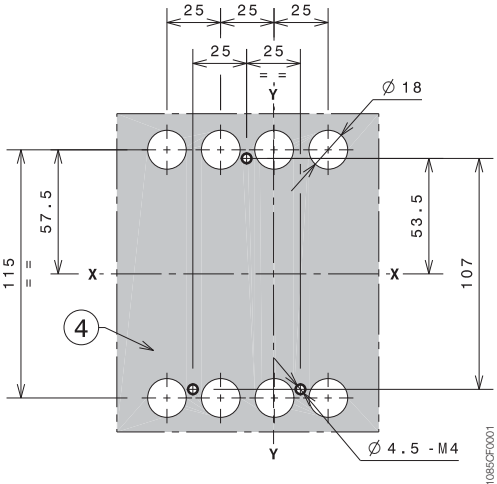

4 POLES

1SDC21085CF0001

Rotary handle operating mechanism on circuit-breakers (RHD)

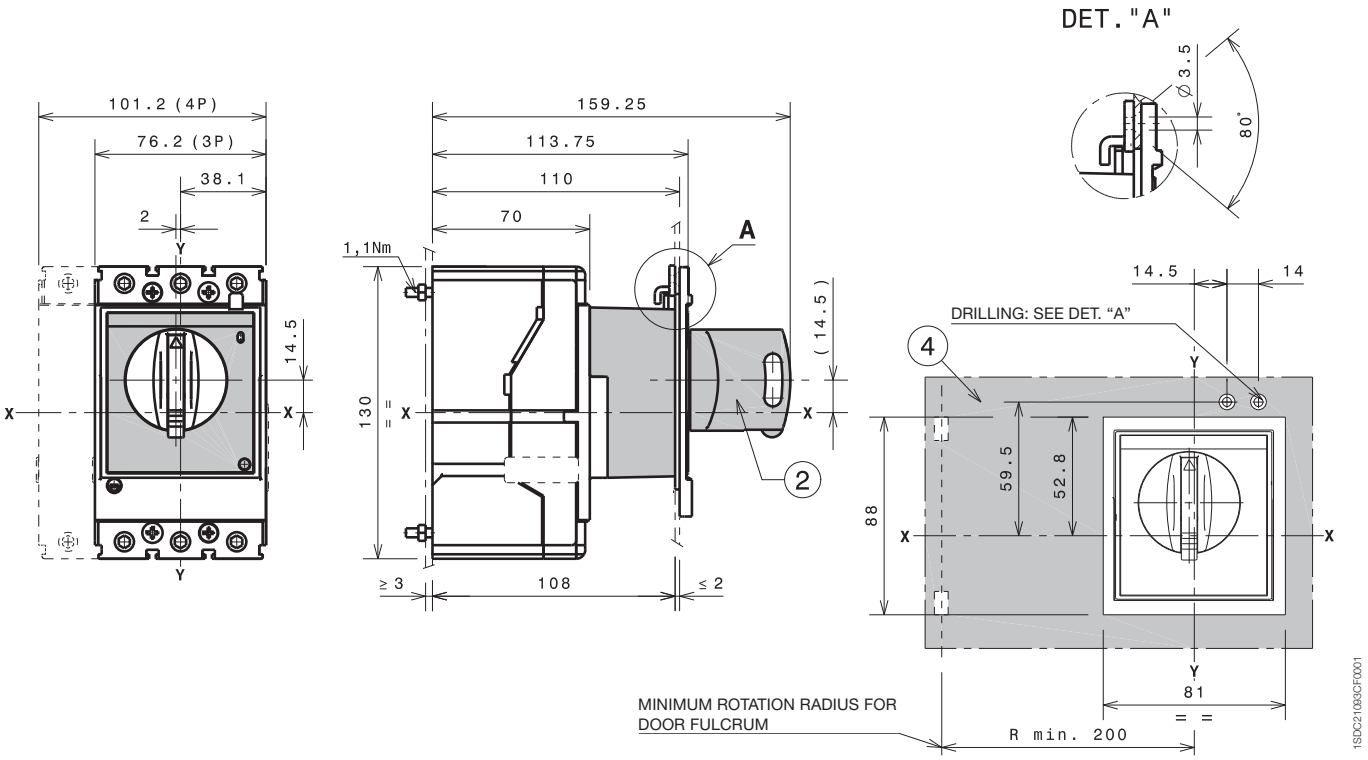

Caption

(2) Rotary handle operating mechanism on circuit-breaker RHD

(4) Door drilling template with direct rotary handle

Rotary handle operating mechanism on the compartment door (RHE)

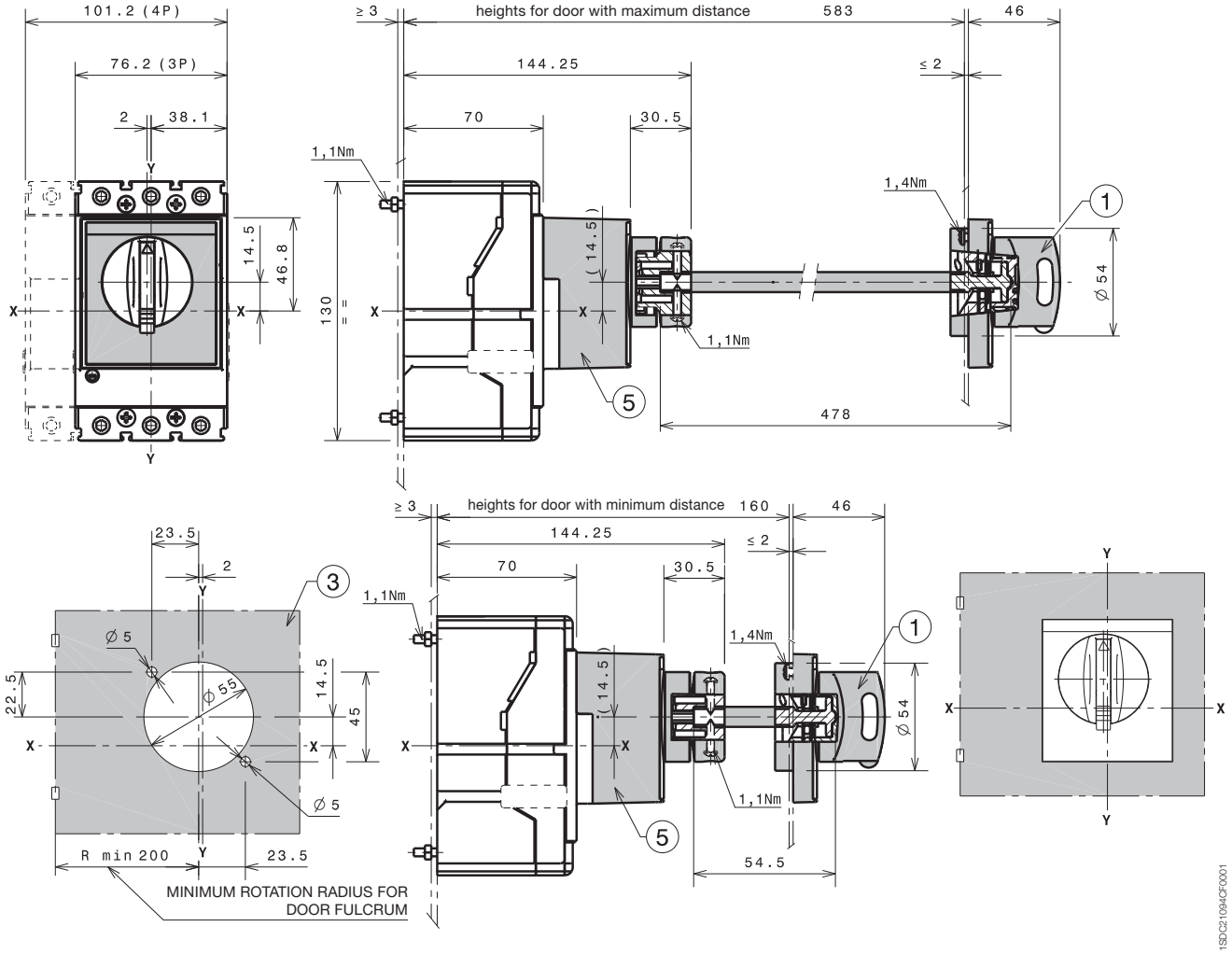

Caption

(1) Transmitted rotary handle

(3) Door drilling template with transmitted rotary mandly

(5) Transmission unit

Direct motor operator (MOD)

Caption

(3) Key lock (on request)

(4) Direct motor operator (MOD)

(5) Drilling template of door with direct rotary handle without flange

(6) Drilling template of door with direct rotary handle

(7) Cables connection

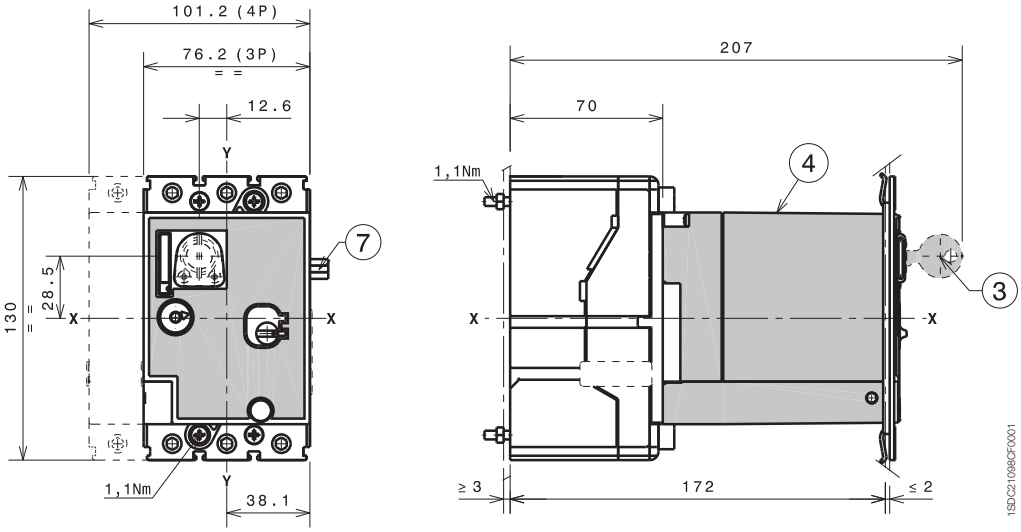

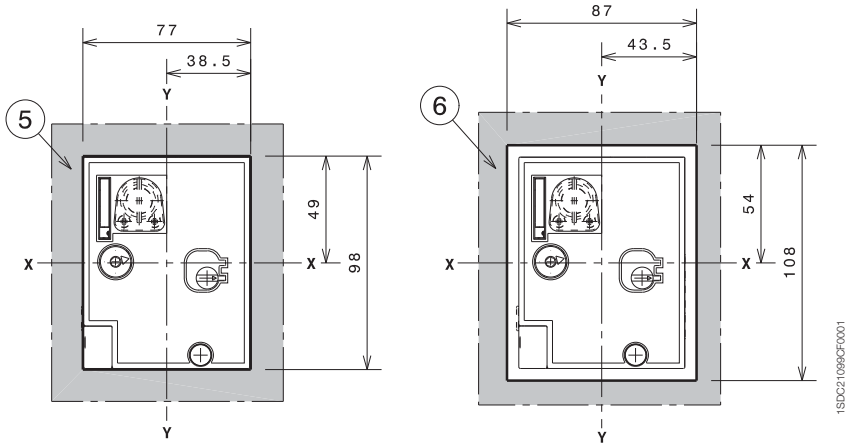

RC Inst and RC Sel residual current release for 3 poles circuit-breaker

Caption

1. Front terminals for busbars connection
2. Terminal covers with degree of protection IP40
3. Drilling template of door with direct rotary handle with flange
4. Drilling template of door with direct rotary handle without flange
5. Drilling template for circuit-breaker fixing on sheet

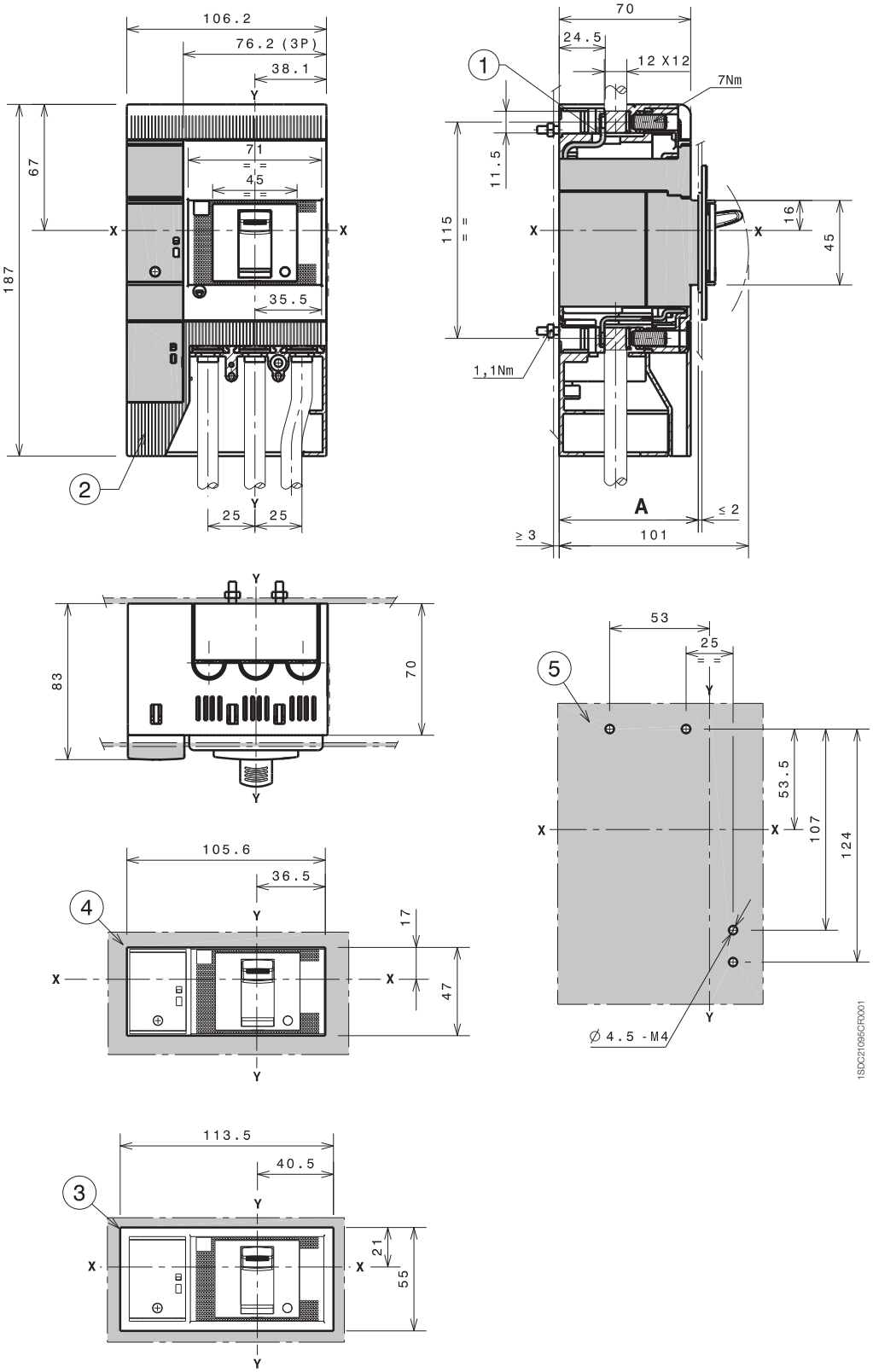

		A
With standard flange	III	74
Without flange	III	71

Overall dimensions

Tmax XT1 - Accessories for fixed circuit-breaker

RC Inst and RC Sel residual current release for 4 poles circuit-breaker

Caption

1. Front terminals for busbars connection
2. Terminal covers with degree of protection IP40
3. Drilling template of door with direct rotary handle with flange
4. Drilling template of door with direct rotary handle without flange
5. Drilling template for circuit-breaker fixing on sheet

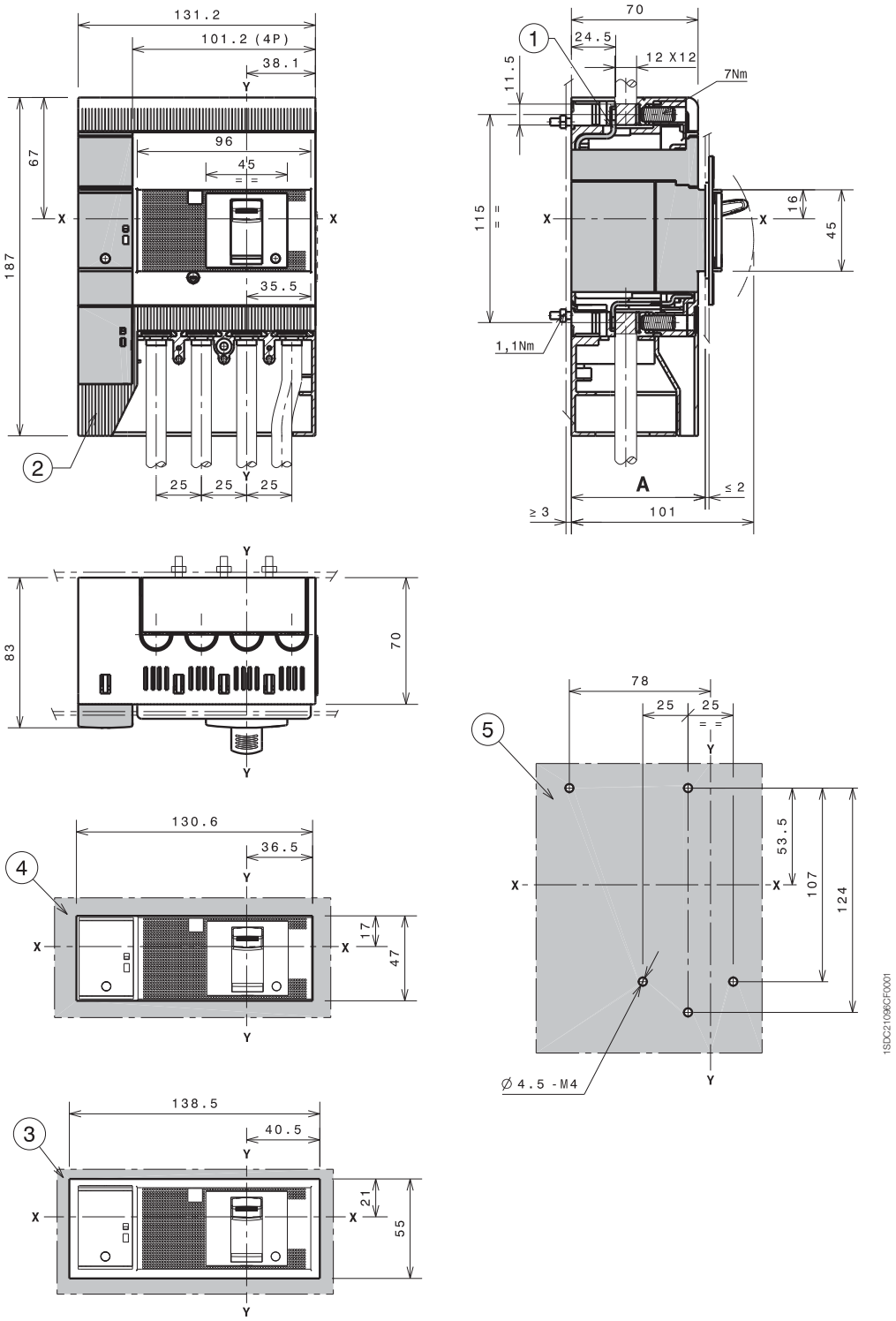

		A
With standard flange	IV	74
Without flange	IV	71

RC Sel 200 4 poles residual current release

Caption

1. Front terminals for busbars connection
2. Terminal covers with degree of protection IP40
3. Drilling template of door with direct rotary handle
4. Drilling template for circuit-breaker fixing on sheet

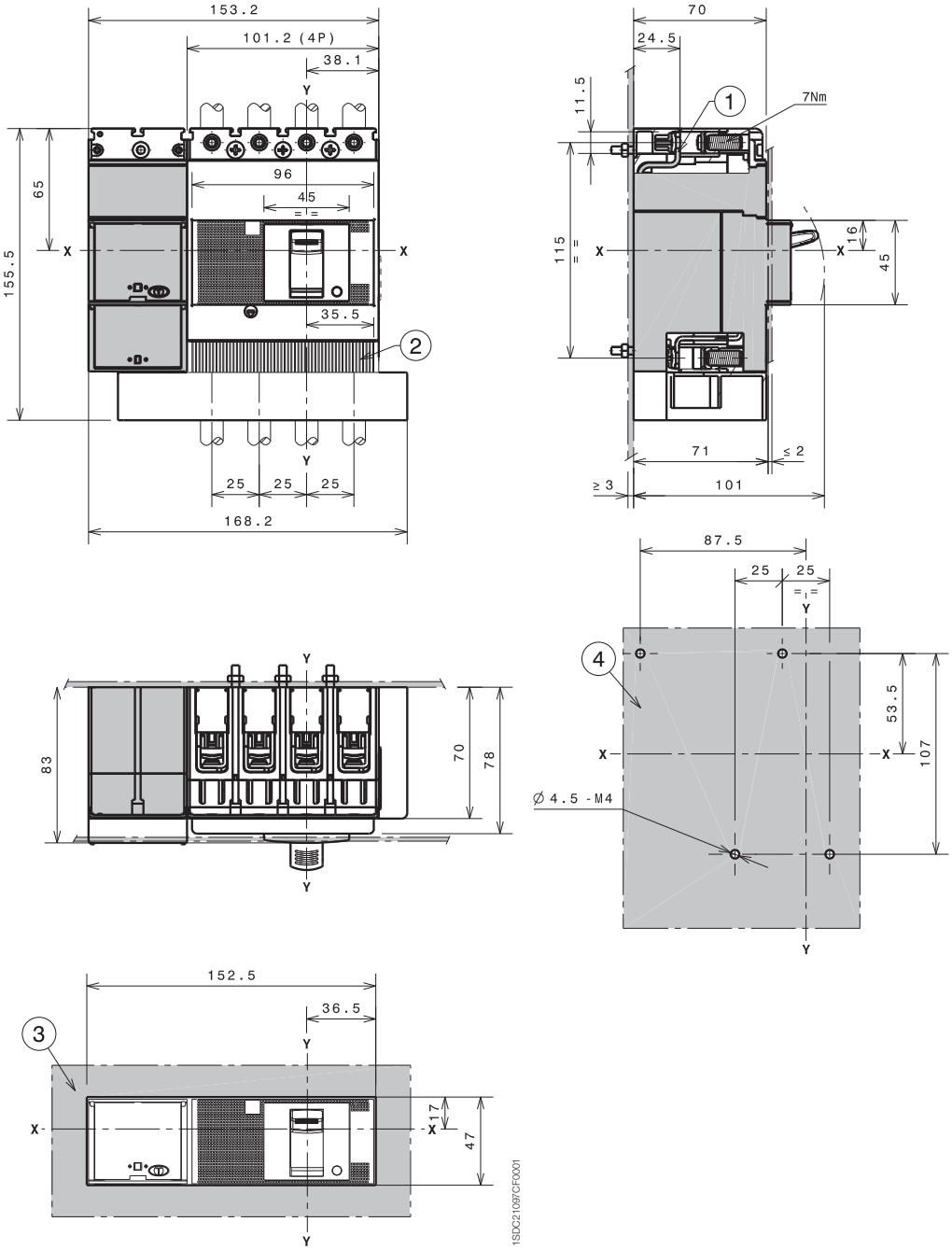

Overall dimensions

Tmax XT1 - Installation for plug-in circuit-breaker

Fixing on support sheet

Caption

1. Fixed part
2. Moving part

Fixing at 50mm		A
With standard flange	III - IV	124
Without flange	III - IV	121
	III - IV	129

Fixing at 70mm for extended front terminals		A
With standard flange	III - IV	144
Without flange	III - IV	141
	III - IV	149

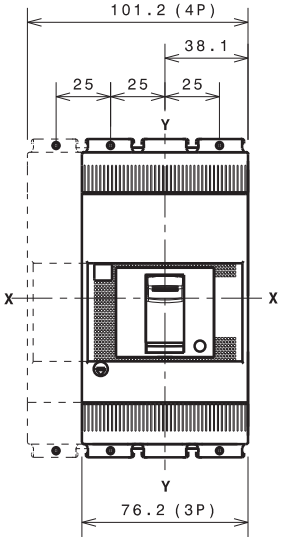

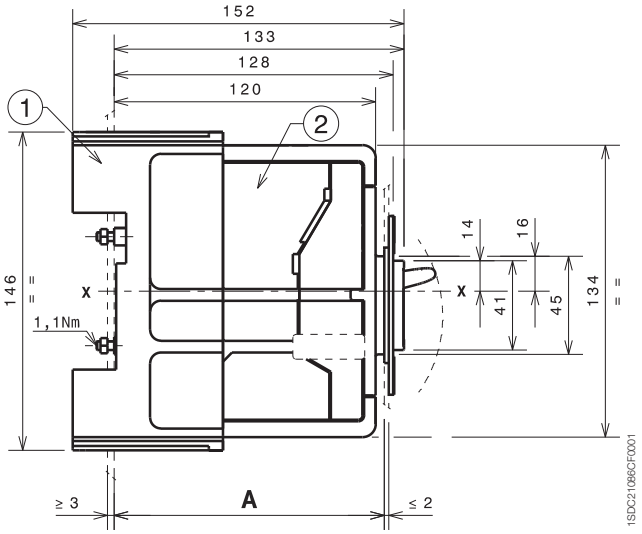

Drilling template for fixing circuit-breaker

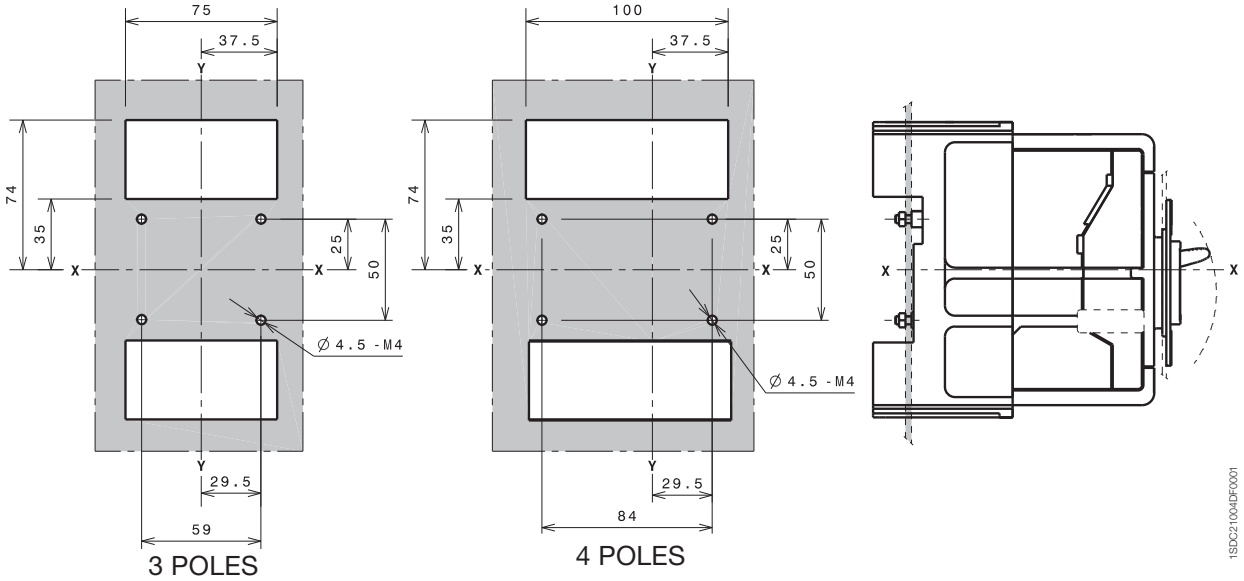

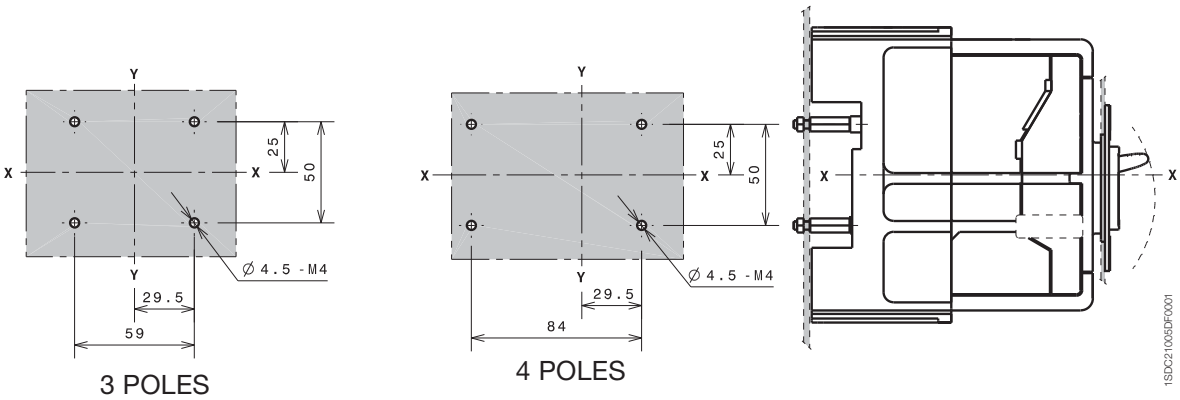

Flanges

Caption

(1) Flange for plug-in circuit-breaker III

(2) Flange for circuit-breaker IV

(5) Flange for plug-in circuit-breaker III-IV with direct motor operator (MOD)

(6) Flange for plug-in circuit-breaker III-IV with direct rotary handle RHD

(7) Optional flange

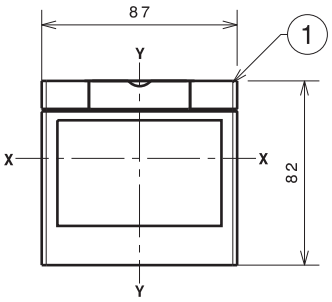

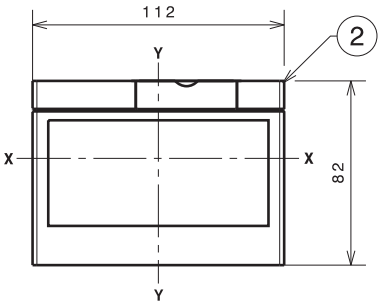

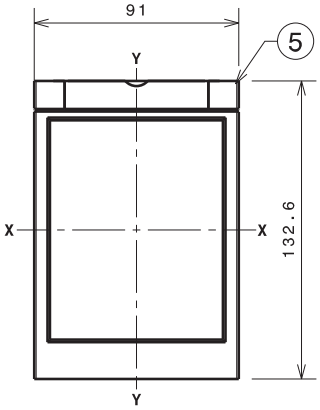

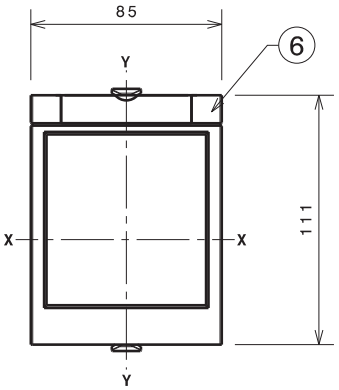

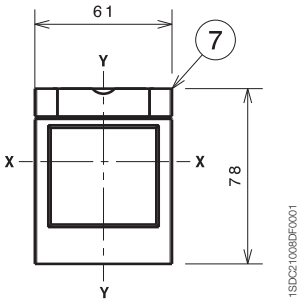

Overall dimensions

Tmax XT1 - Installation for plug-in circuit-breaker

Drilling templates compartment door

With standard flange

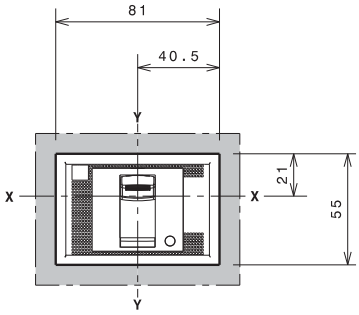

B=124 C=144
3 POLES

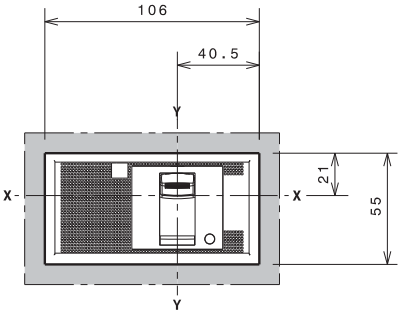

B=124 C=144
4 POLES

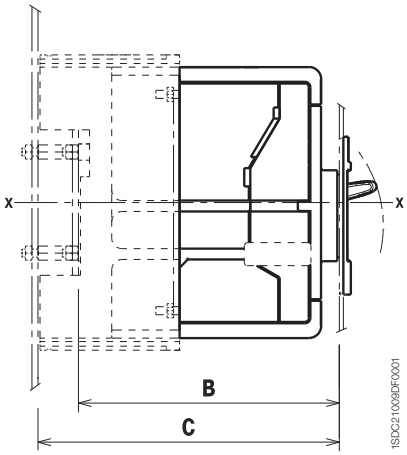

Without flange

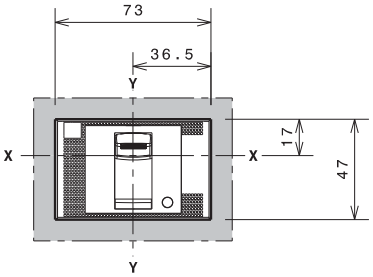

B=121 C=141
3 POLES

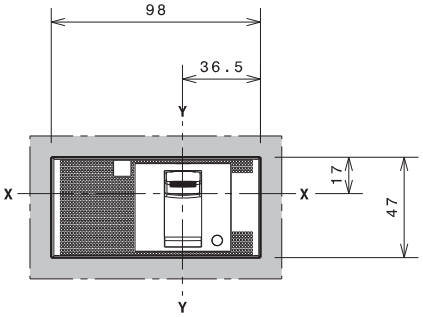

B=121 C=141
4 POLES

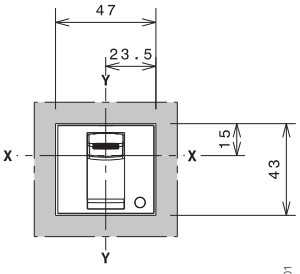

B=129 C=149
3-4 POLES

With optional flange

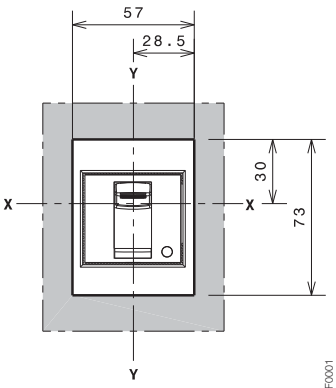

B=129 C=149
3-4 POLES

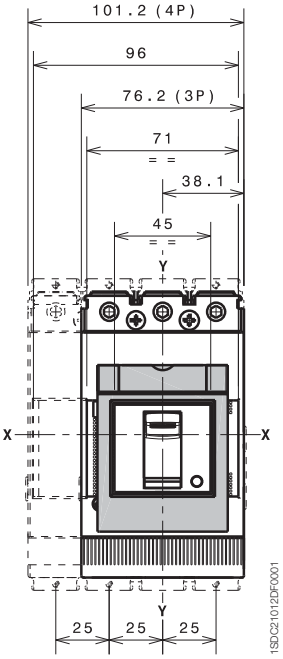

Overall dimensions

Tmax XT1 - Terminals for plug-in circuit-breaker

Terminals EF

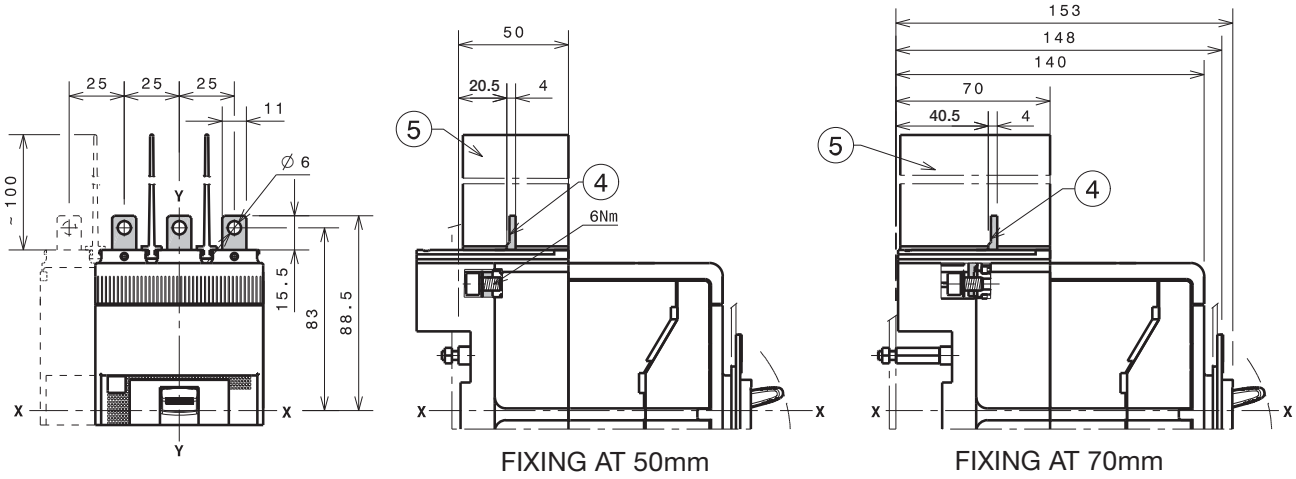

Caption

(4) Front extended terminals

(5) 100mm insulating barriers between phases (compulsory) provided

Terminals ES

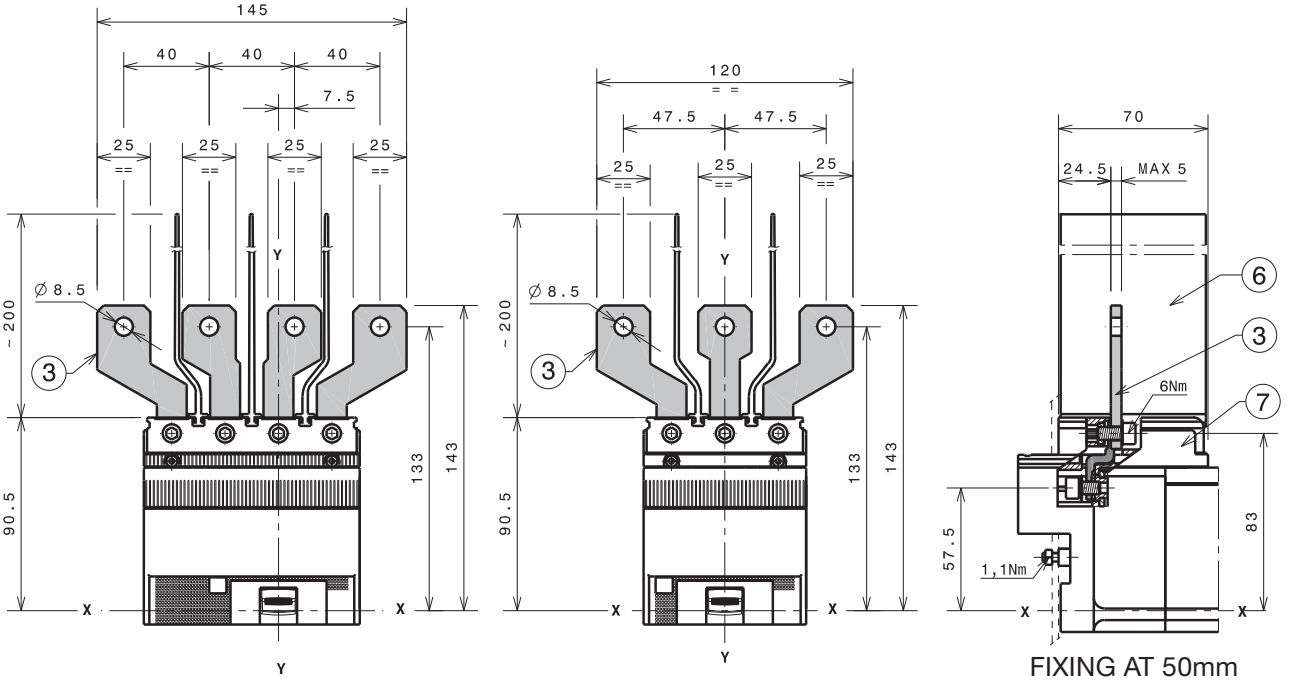

Caption

(3) Front extended spread terminals

(6) 200mm insulating barriers between phases (compulsory) provided

(7) Adaptor (compulsory) not provided

Overall dimensions

Tmax XT1 - Terminals for plug-in circuit-breaker

1x1.5...50mm² terminals FCCuAl

Caption

1. 1x1.5...50mm² front terminal FCCuAl
5. Adaptor (compulsory) optional
6. 25mm insulating barriers between phases (compulsory) provided

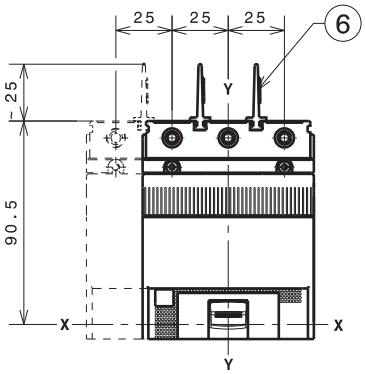

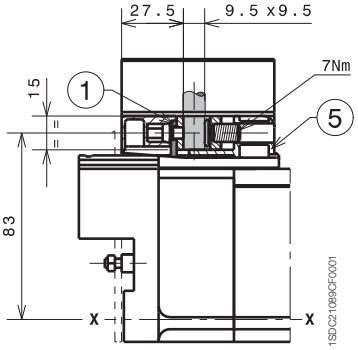

FIXING AT 50mm

1x35...95mm² terminals FCCuAl

Caption

1. External terminal FCCuAl
2. High terminal covers with degree of protection IP40 (optional) provided

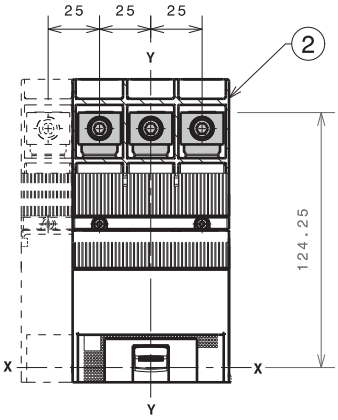

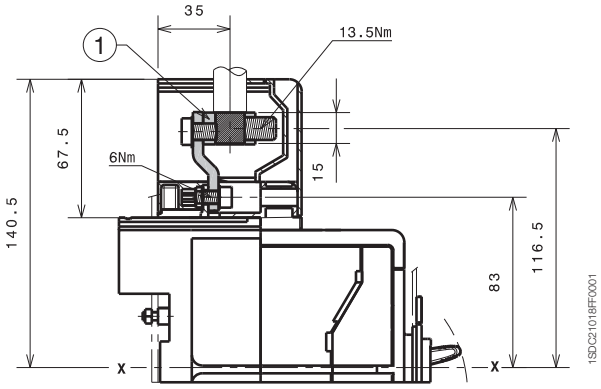

Terminals FCCu

Caption

4. Terminals FCCu
5. Adaptor (compulsory) not provided

Note: 25mm insulating barriers between phases (compulsory) provided as standard with the circuit-breaker

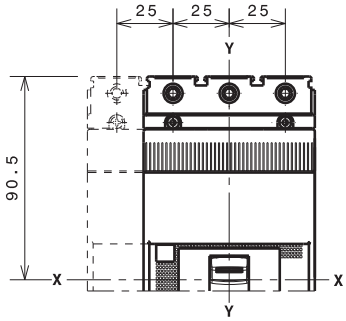

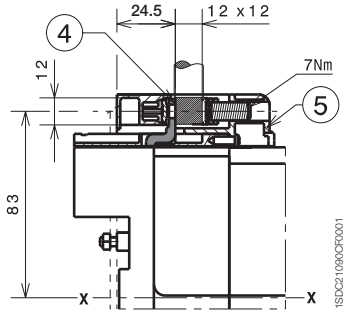

FIXING AT 50mm

Terminals MC

Caption

(2) Terminal covers with degree of protection IP40 (optional) provided

(3) Front terminal for multicable connection

(5) Adaptor (compulsory) not provided

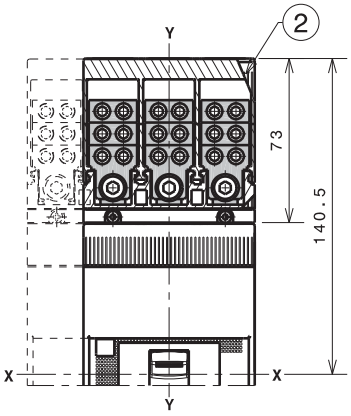

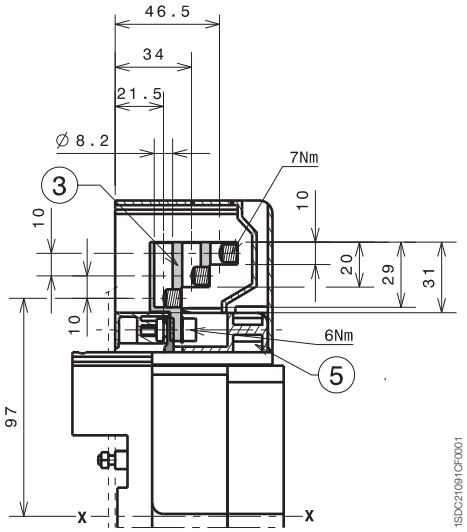

FIXING AT 50mm

Terminals HR/VR

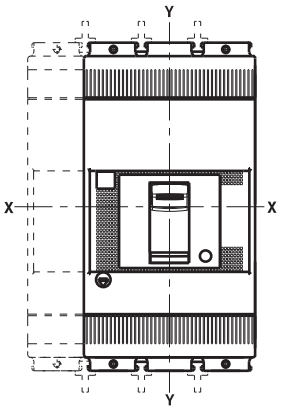

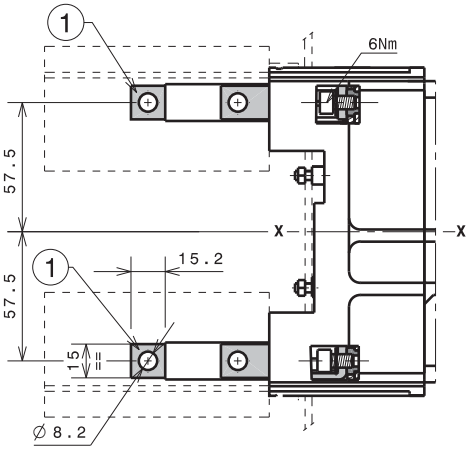

FIXING AT 50mm

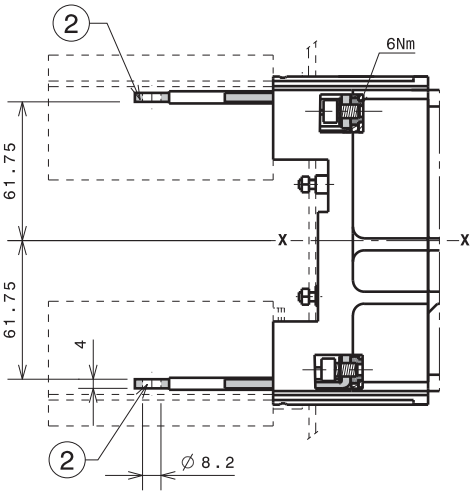

FIXING AT 50mm

Caption

(1) Rear vertical terminals

(2) Rear horizontal terminals

(3) 90mm insulating barriers between phases (compulsory) not provided

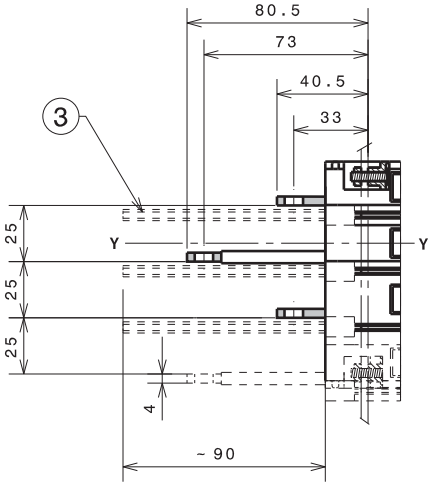

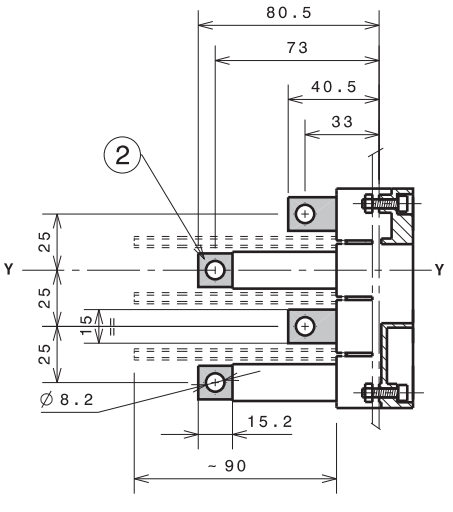

Overall dimensions

Tmax XT1 - Accessories for plug-in circuit-breaker

Direct motor operator (MOD)

Caption

1. Fixed part
2. Moving part
3. Key lock (on request)
4. Direct motor operator (MOD)
5. Drilling template of door with direct rotary handle without flange
6. Drilling template of door with direct rotary handle
7. Cables connection

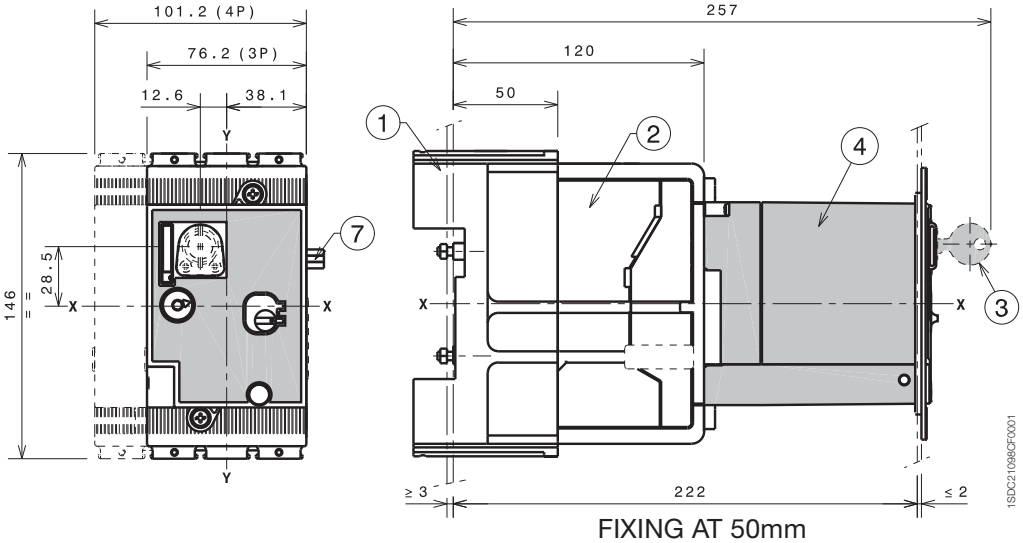

FIXING AT 50mm

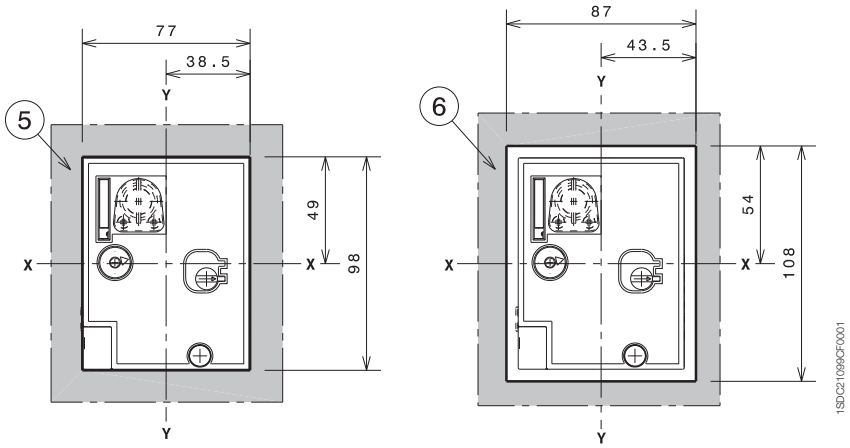

Overall dimensions

Tmax XT2 - Installation for fixed circuit-breaker

Fixed circuit-breaker fixing on sheet

Caption

(2) Optional wiring ducts

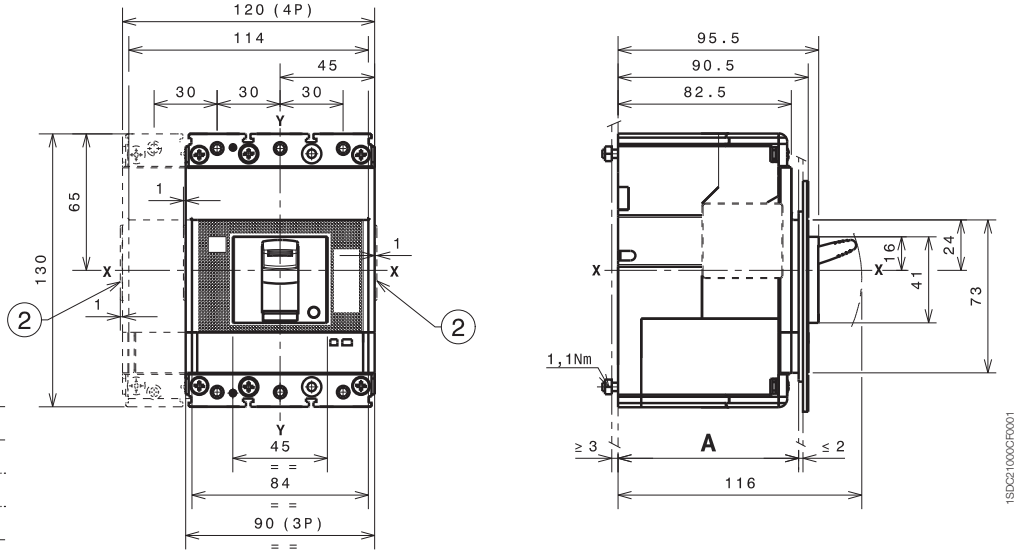

		A
With standard flange	III - IV	86
Without flange	III - IV	83.5
	III - IV	91.5

Fixed circuit-breaker fixing on DIN EN 50022 rail

Caption

(1) Bracket for fixing

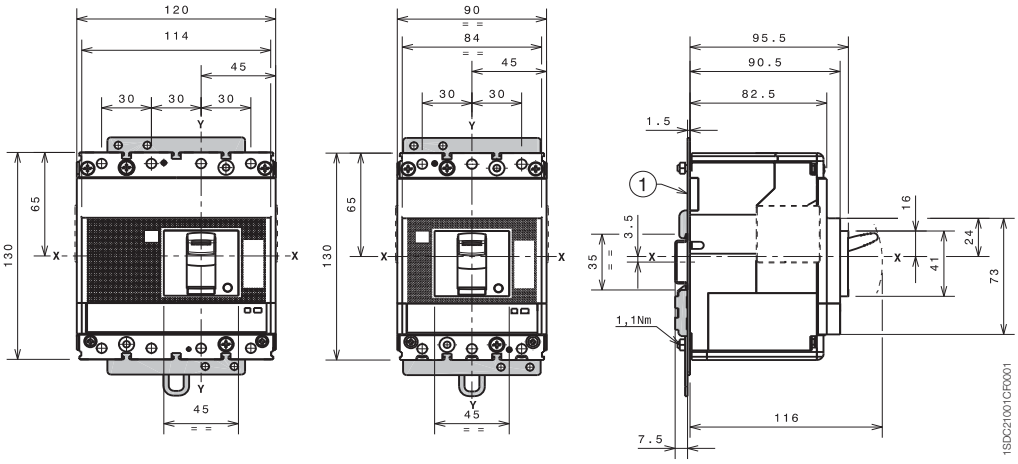

Drilling templates and support sheet

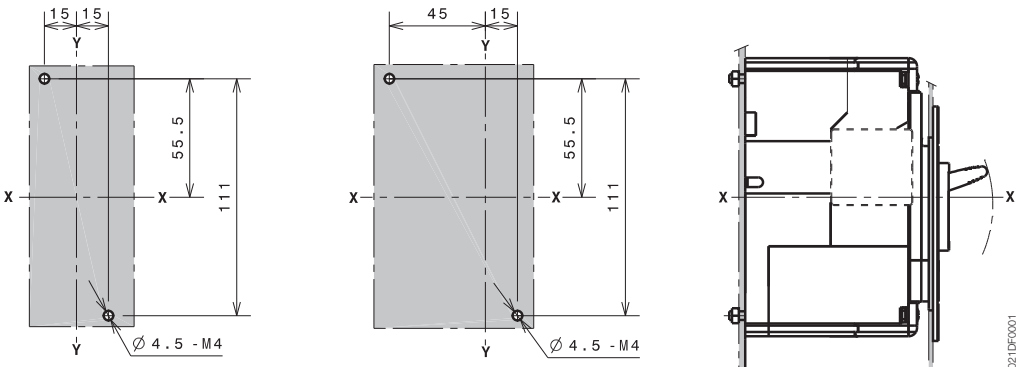

3 POLES

4 POLES

Overall dimensions

Tmax XT2 - Installation for fixed circuit-breaker

Flanges

Caption

1. Flange for fixed circuit-breaker III
2. Flange for fixed circuit-breaker IV
3. Flange for fixed circuit-breaker III-IV with MOE and FLD
4. Flange for circuit-breaker III-IV with direct rotary handle RHD
8. Flange for circuit-breaker IV with fixed residual current and front terminals
9. Optional flange

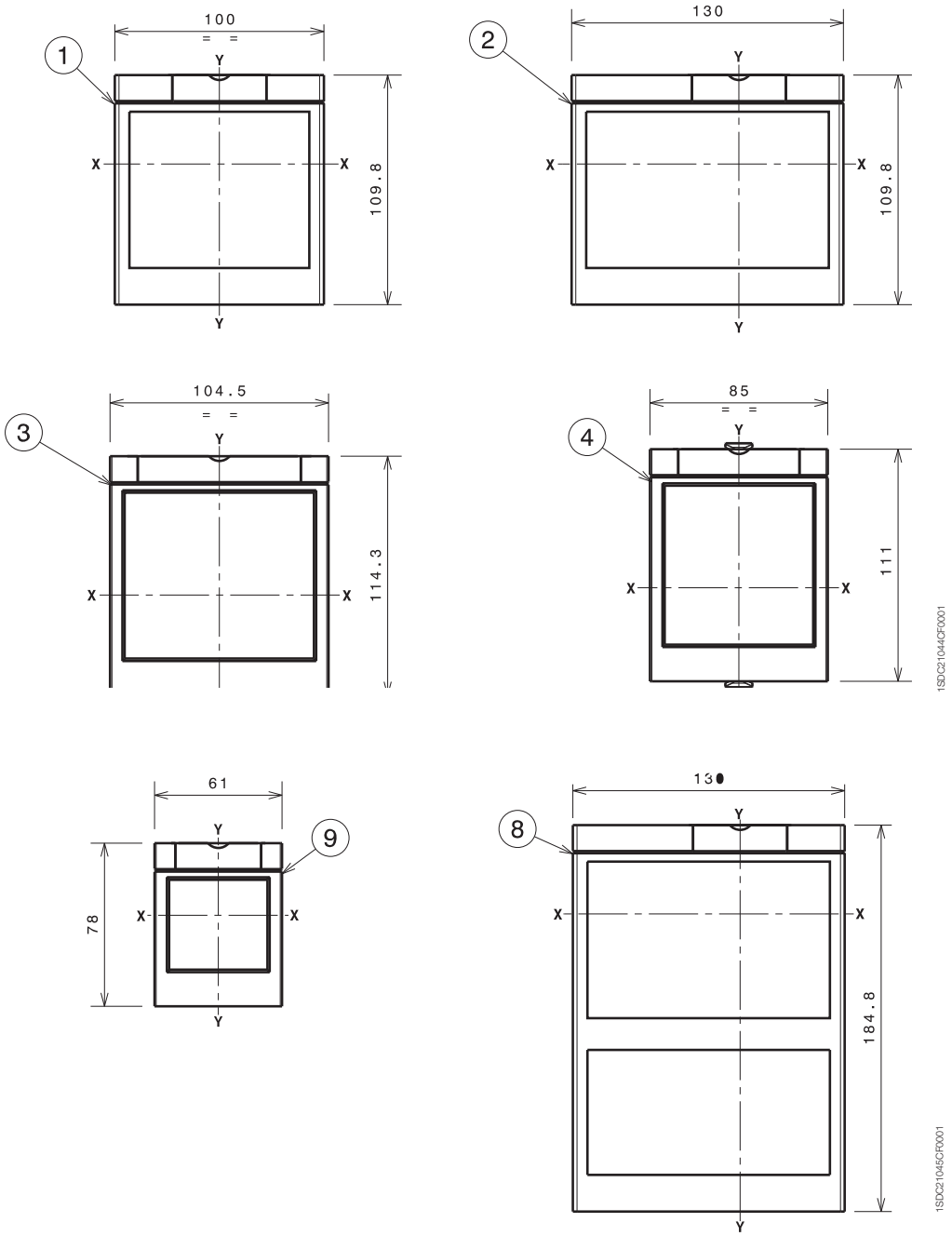

Drilling templates compartment door

With standard flange

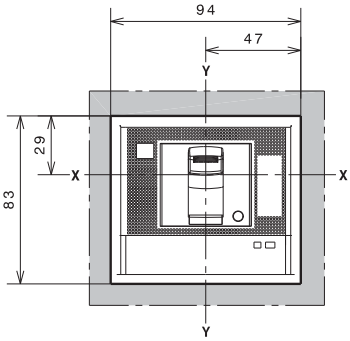

A=86
3 POLES

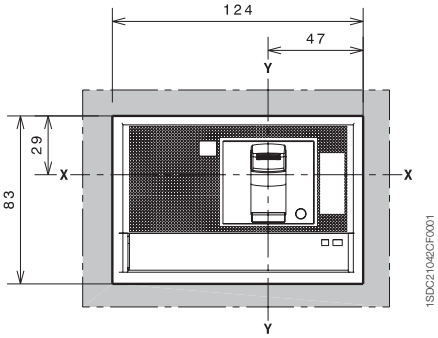

A=86
4 POLES

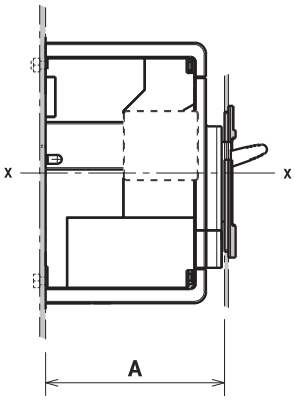

Without flange

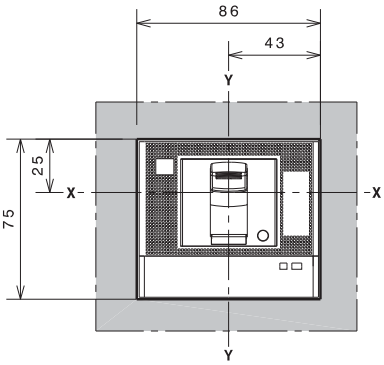

A=83.5
3 POLES

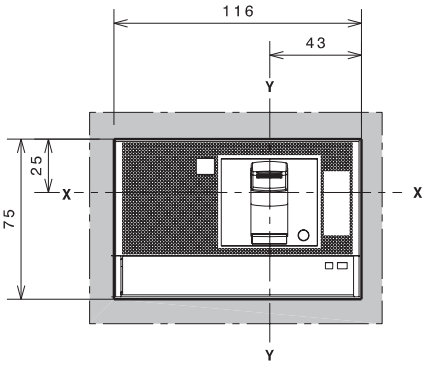

A=83.5
4 POLES

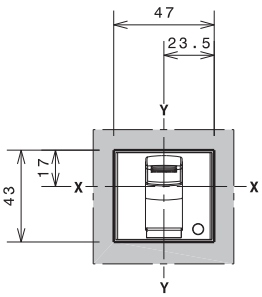

A=91.5
3-4 POLES

With optional flange

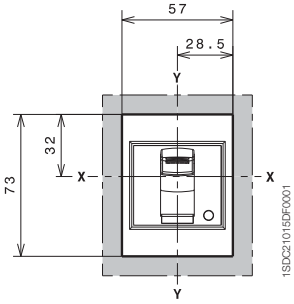

A=92
3-4 POLES

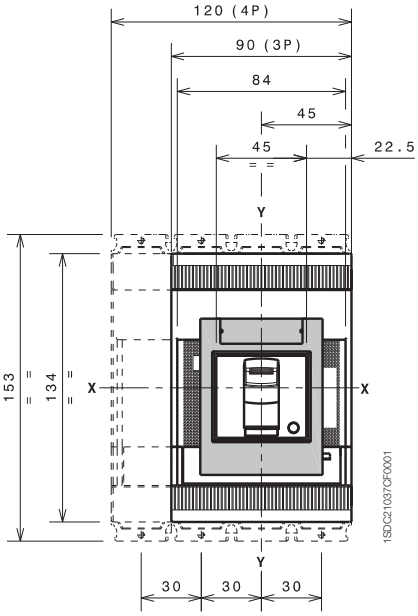

Overall dimensions

Tmax XT2 - Terminals for fixed circuit-breaker

Terminals F

Caption

1. 100mm insulating barriers between phases (compulsory) not provided
2. Bottom terminal covers with degree of protection IP30 (optional) not provided
3. Front terminals for busbars connection

Note: 25mm insulating barriers between phases (compulsory) provided

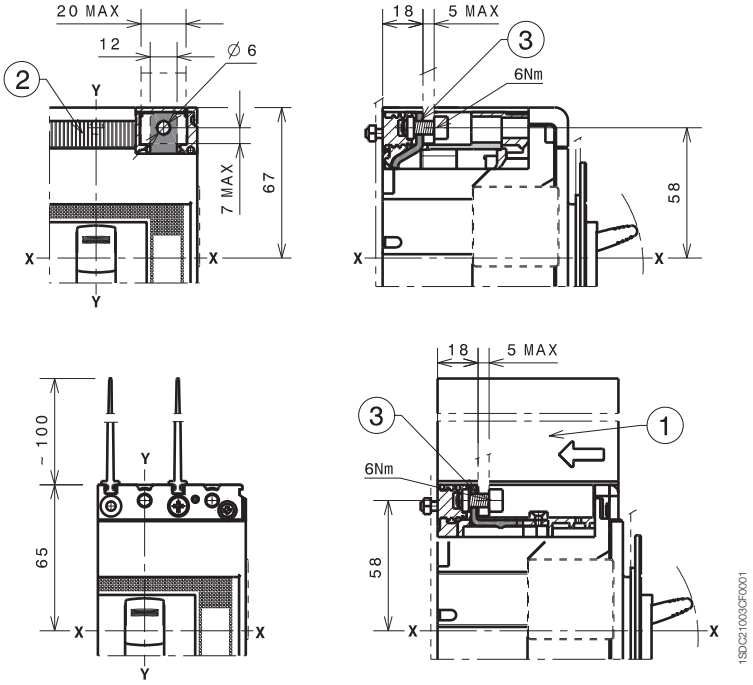

Terminals EF

Caption

4. Front extended terminals
5. Terminal covers with degree of protection IP40 (optional) not provided
8. 100mm insulating barriers between phases (compulsory) provided

Note: insulated plate (compulsory) provided

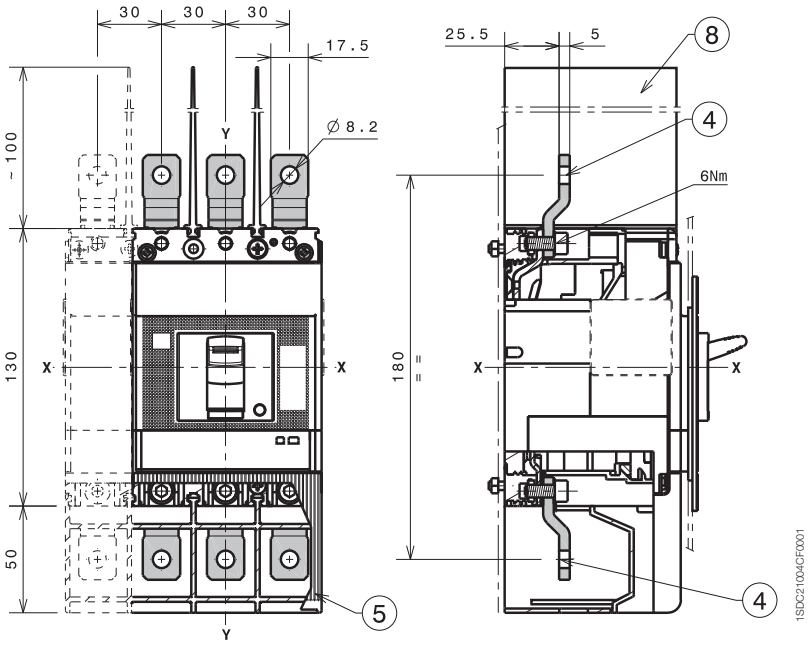

Terminals ES

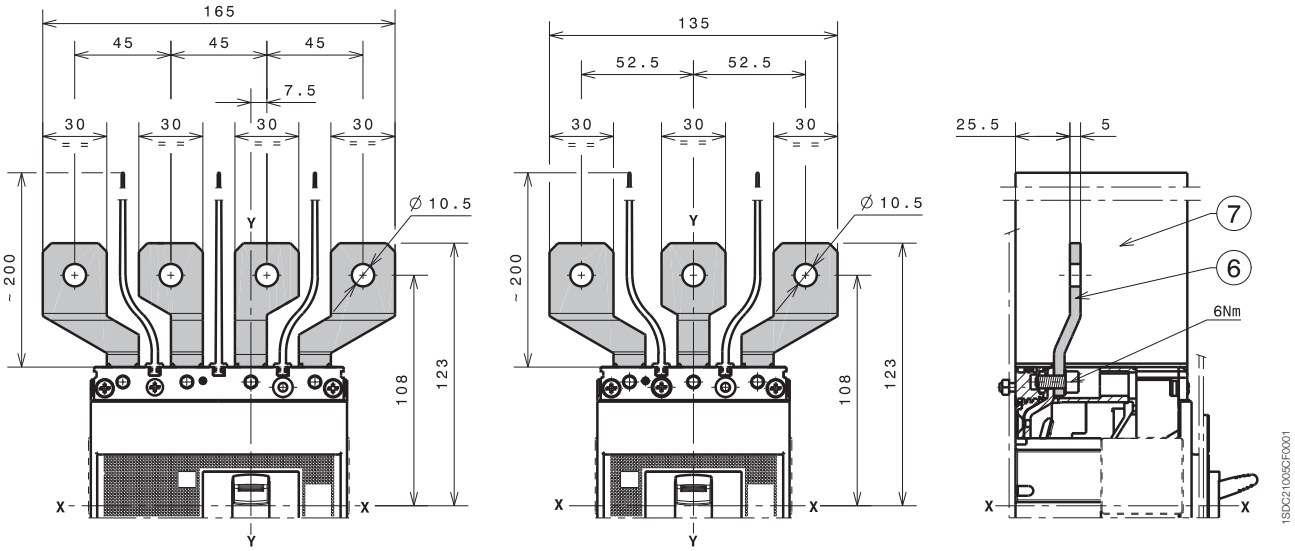

Caption

(6) Front extended spread terminals

(7) 200mm insulating barriers between phases (compulsory) provided

Note: insulated plate (compulsory) provided

1x1...95mm² terminals FCCuAl

Caption

(1) 1x1...95mm² terminals FCCuAl

(3) 25mm insulating barriers between phases (compulsory) provided

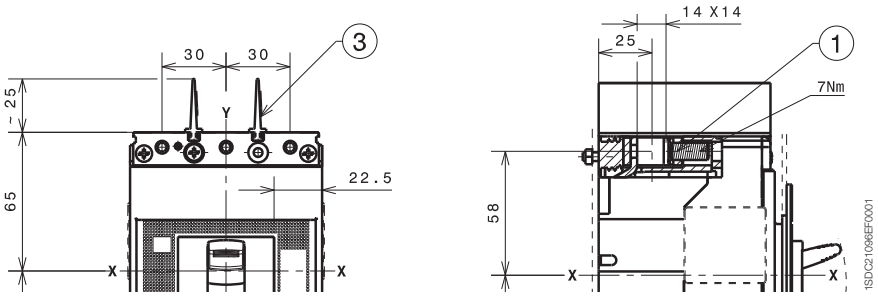

1x70...185mm² terminals FCCuAl

Caption

(1) External terminal FCCuAl

(2) High terminal covers with degree of protection IP40 (optional) provided

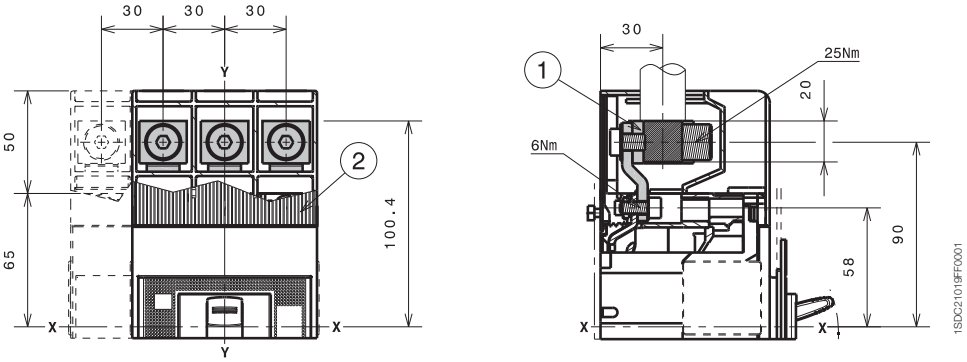

Overall dimensions

Tmax XT2 - Terminals for fixed circuit-breaker

2x35...95mm² terminals FCCuAl

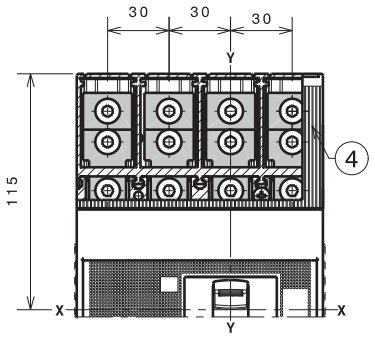

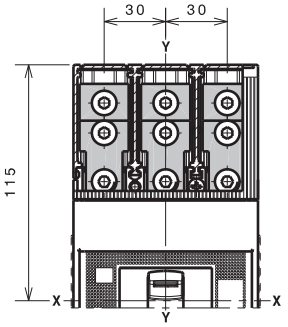

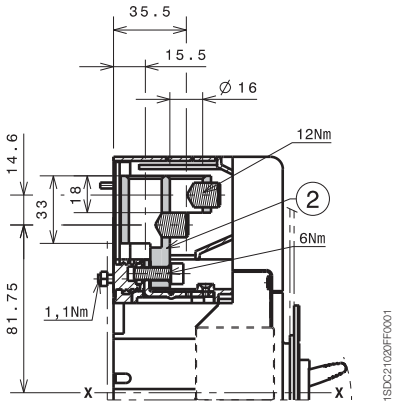

Caption

(2) 2x35...95mm² terminals FCCuAl

(4) Terminal covers with degree of protection IP40 (optional) provided

Terminals FCCu

Caption

(7) Terminals FCCu

Note: 25mm insulating barriers between phases (compulsory) provided as standard with the circuit-breaker

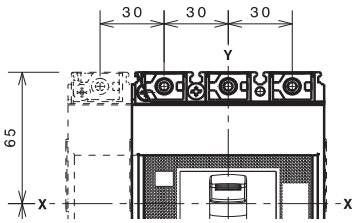

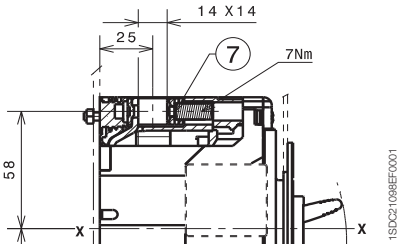

Terminals MC

Caption

(6) Multicable terminals

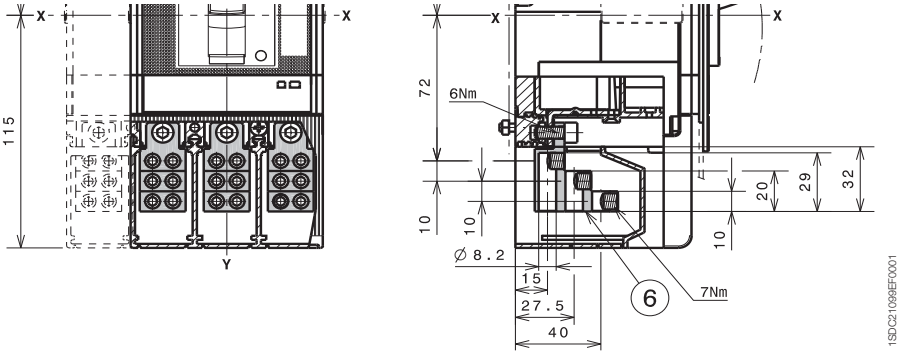

Terminals R

Caption

(1) Rear adjustable terminals

(2) Bottom terminal covers with degree of protection IP30 (optional) provided

(3) Drilling template for circuit-breaker III fixing on sheet

(4) Drilling template for circuit-breaker IV fixing on sheet

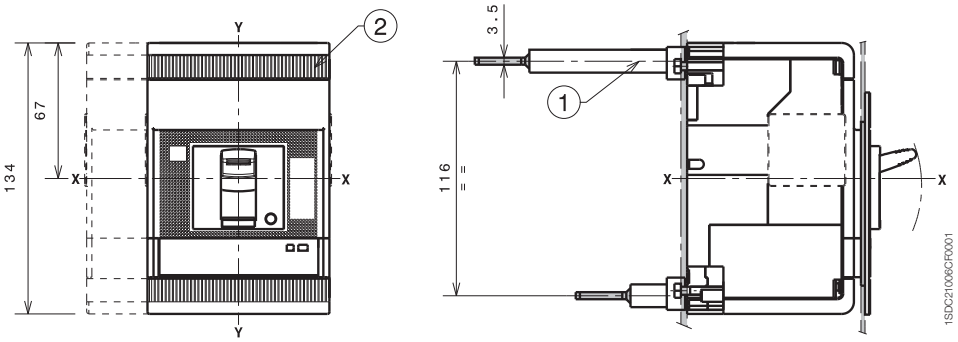

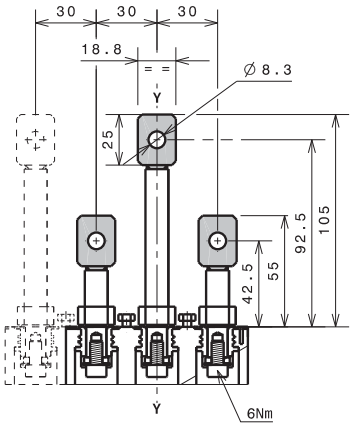

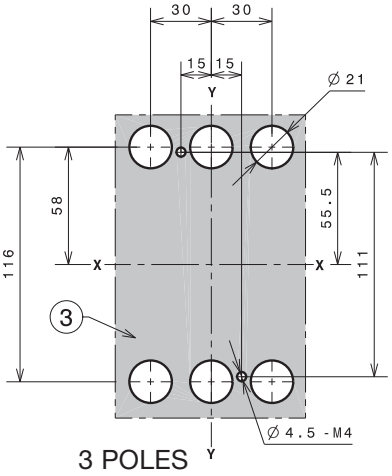

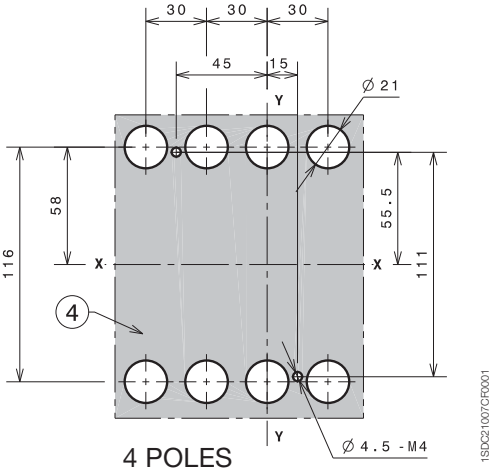

Overall dimensions

Tmax XT2 - Accessories for fixed circuit-breaker

Rotary handle operating mechanism on circuit-breaker (RHD)

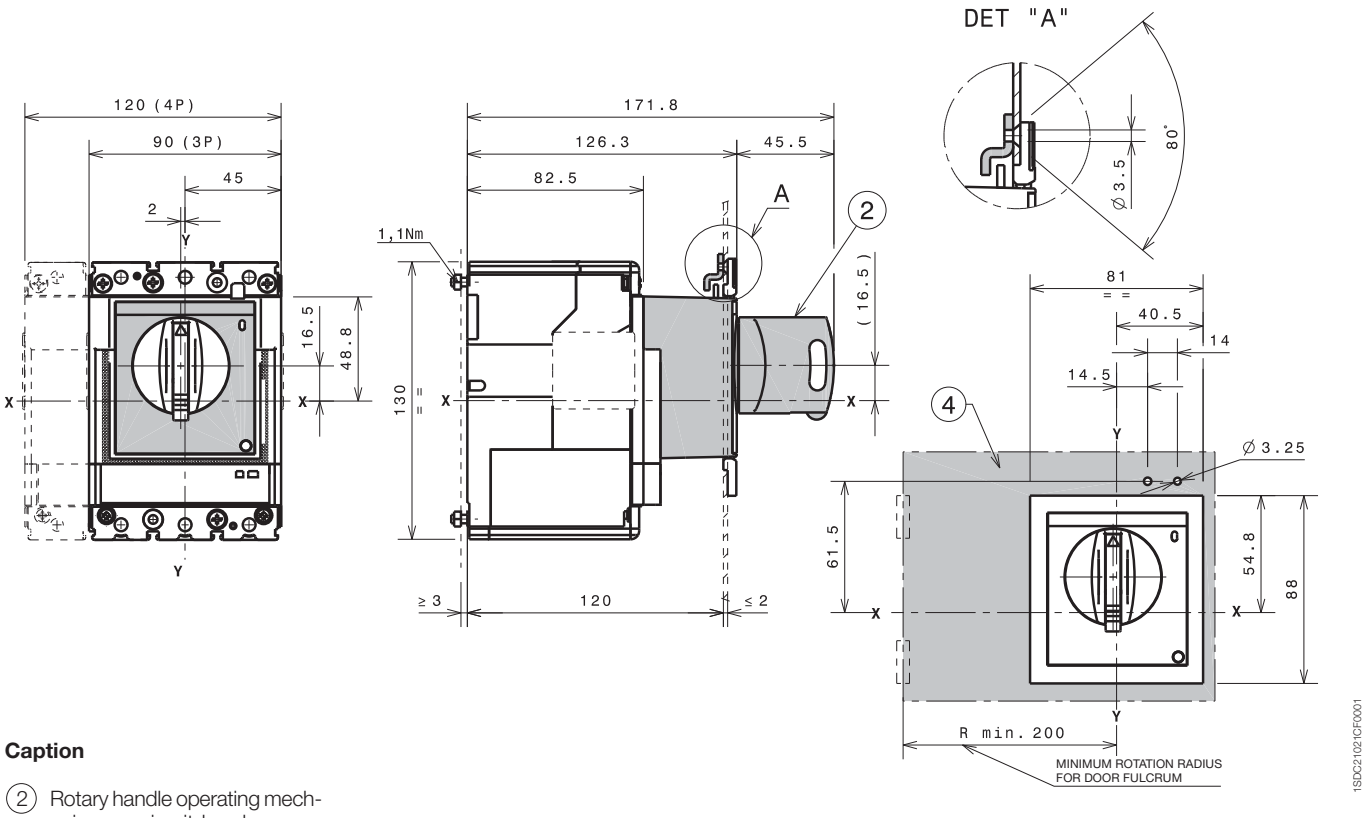

Caption

(2) Rotary handle operating mechanism on circuit-breaker

(4) Drilling template of door with direct rotary handle

Rotary handle operating mechanism on the compartment door (RHE)

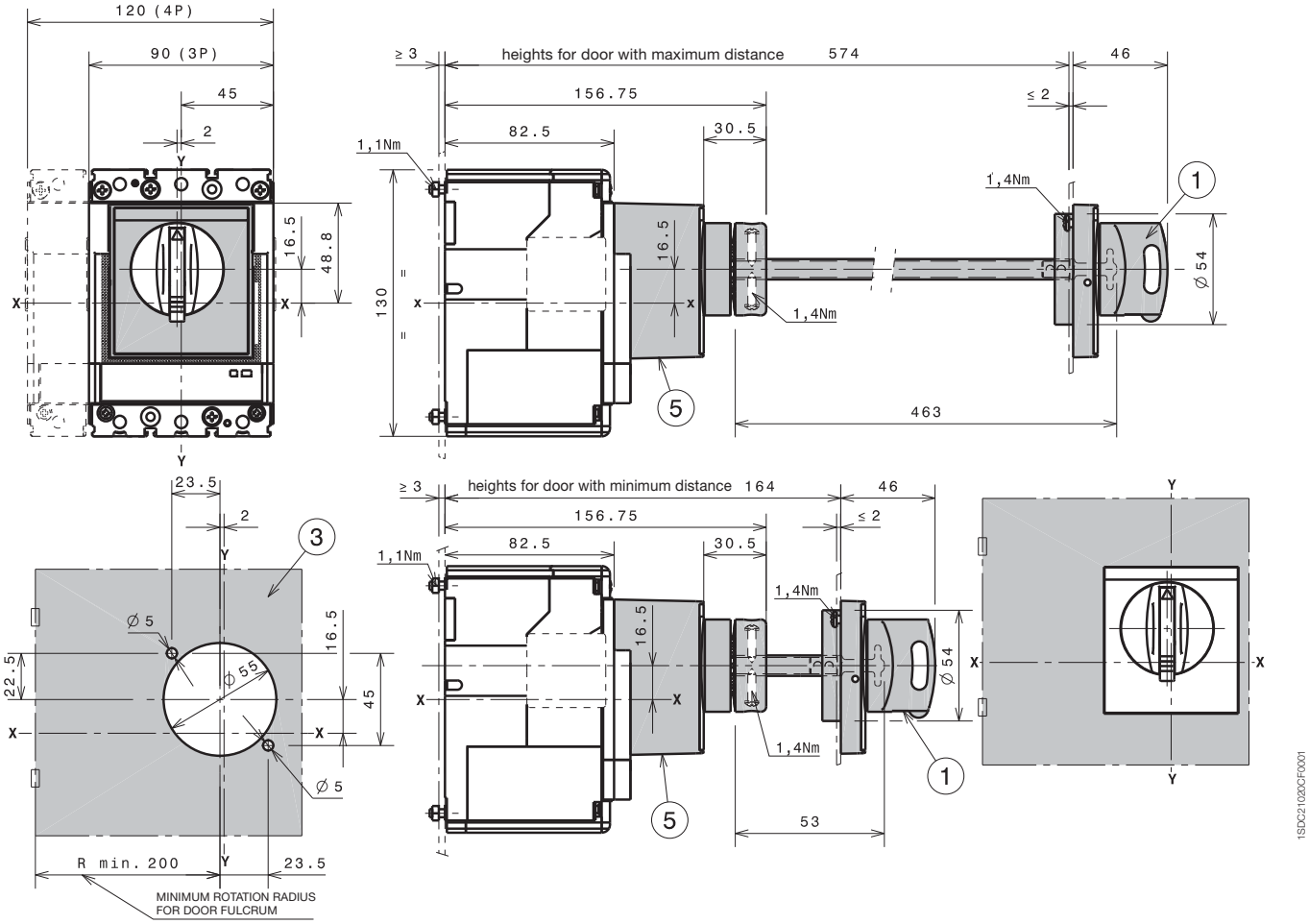

Caption

1. Transmitted rotary handle operating mechanism
3. Door drilling template with transmitted rotary mandly
5. Transmission unit

Overall dimensions

Tmax XT2 - Accessories for fixed circuit-breaker

Stored energy motor operator (MOE)

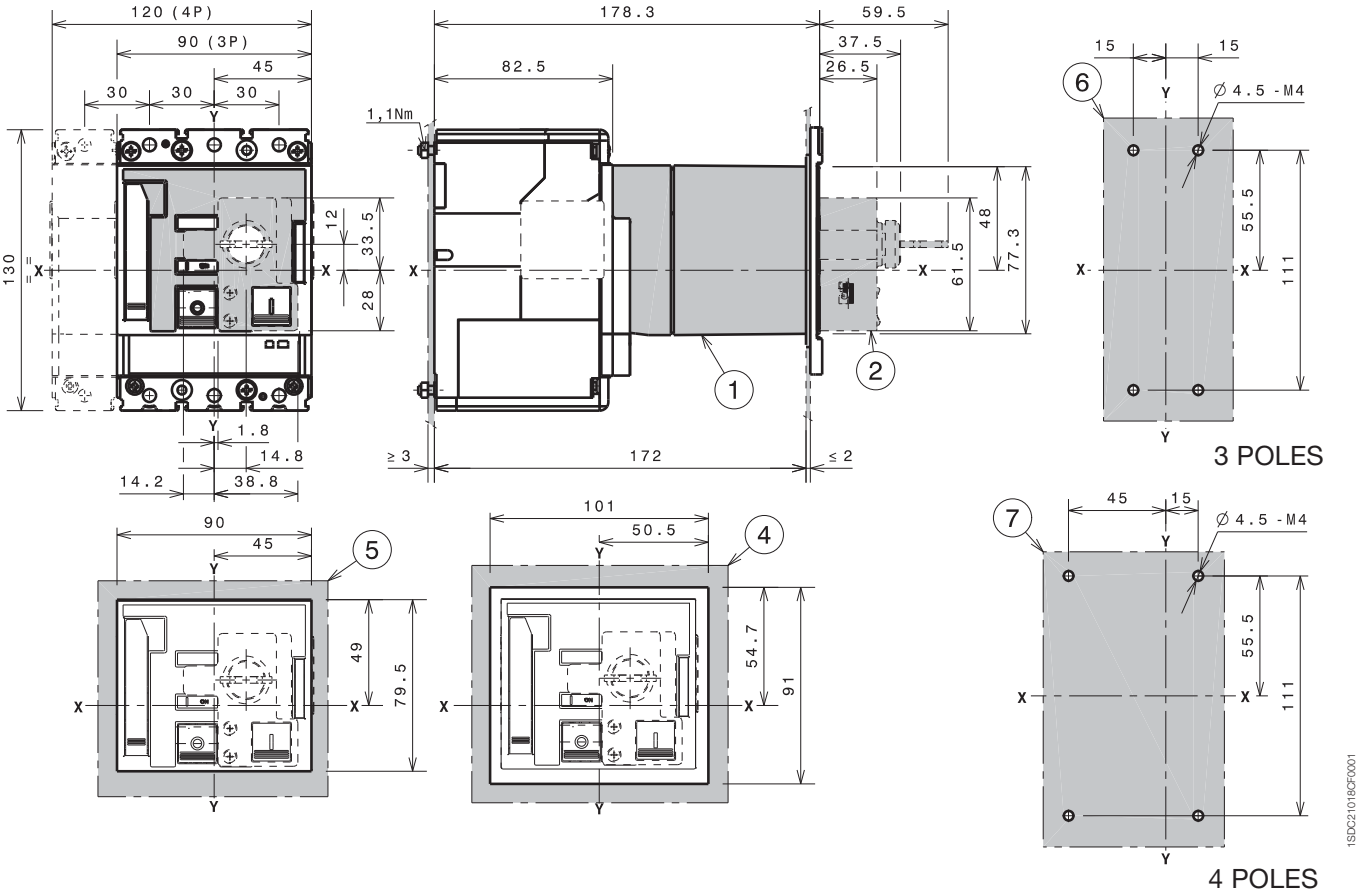

Caption

1. Stored energy motor operator (MOE)
2. Key lock optional
4. Drilling template of door with direct rotary handle con mostrina (MOE)
5. Door drilling template with direct rotary handle senza mostrina (MOE)
6. Drilling template for circuit-breaker III fixing on sheet
7. Drilling template for circuit-breaker IV fixing on sheet

Front for lever operating mechanism (FLD)

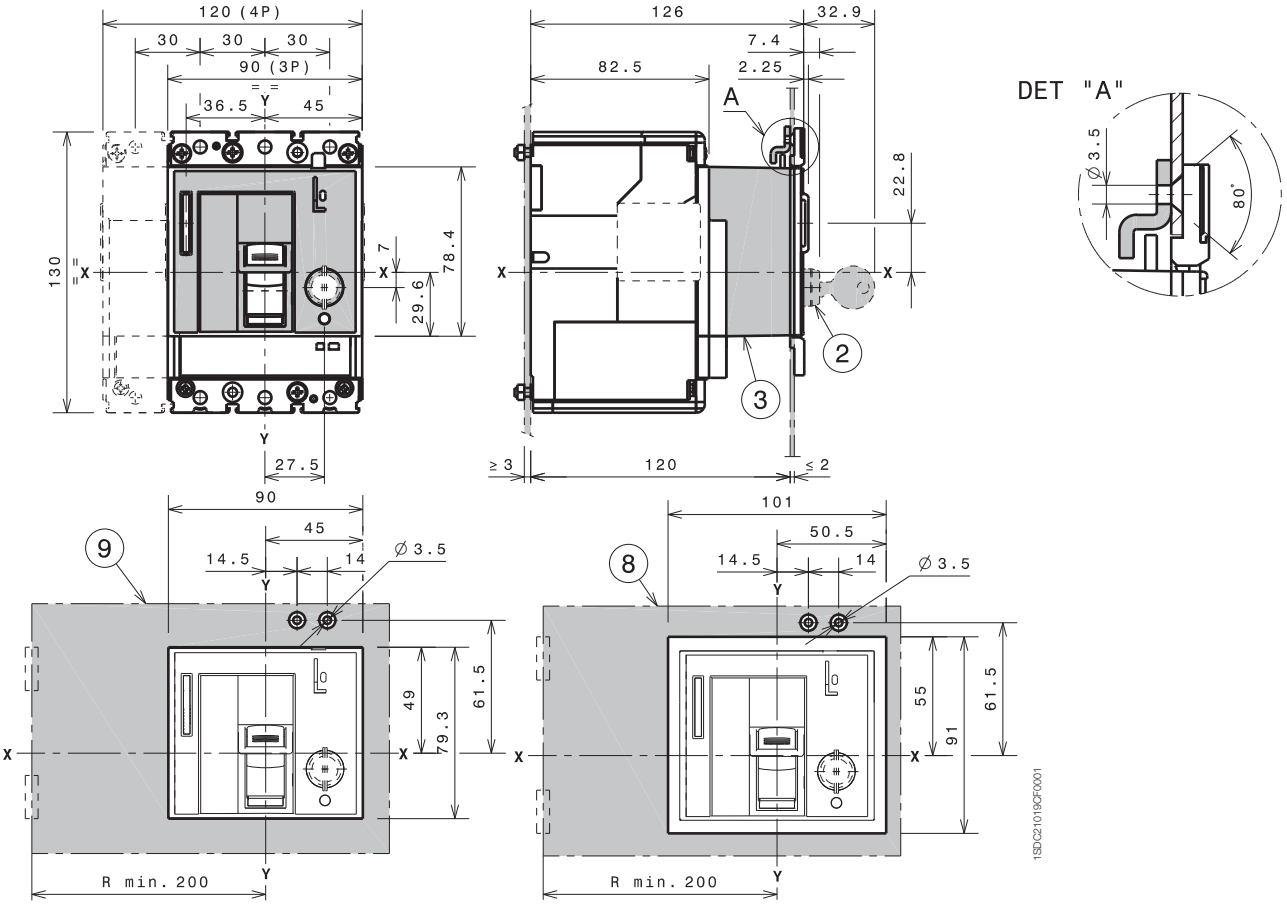

Caption

(2) Key lock optional

(3) Front for lever operating mechanism (FLD)

(8) Drilling template of door with direct rotary handle with flange (FLD)

(9) Drilling template of door with direct rotary handle without flange (FLD)

Overall dimensions

Tmax XT2 - Accessories for fixed circuit-breaker

Residual current RC Sel

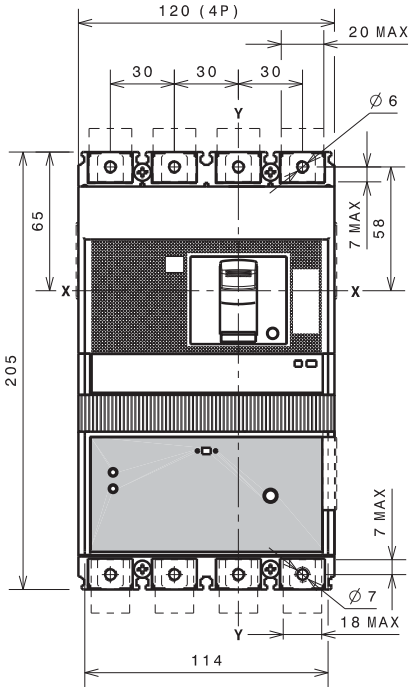

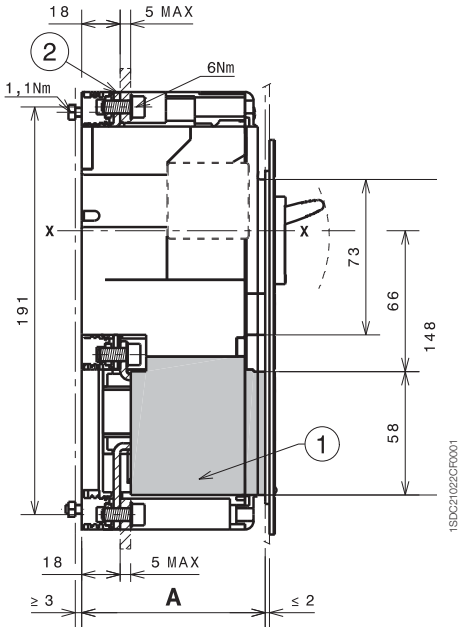

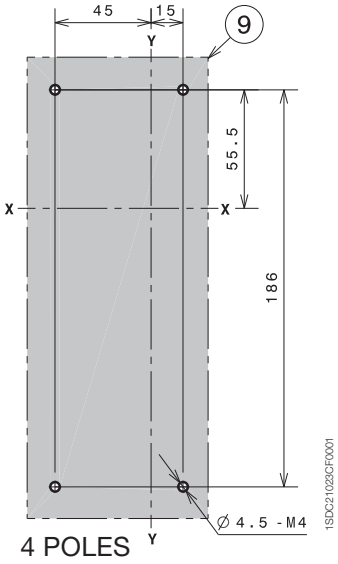

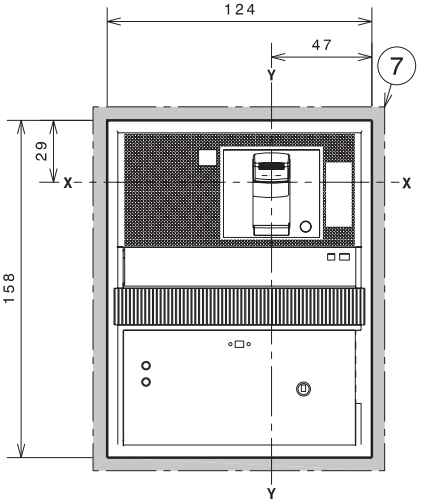

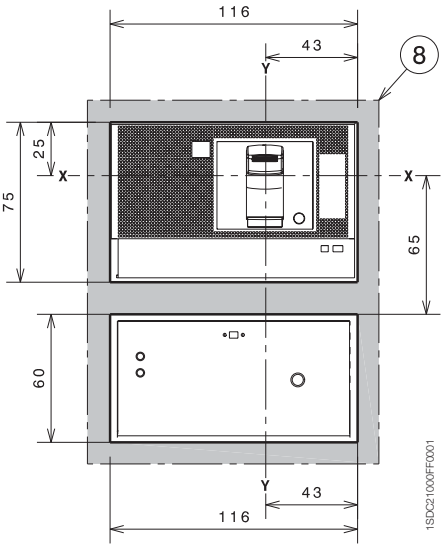

Caption

1. Residual current
2. Front terminals
7. Drilling template of door with direct rotary handle and fixing with flange
8. Drilling template of door with direct rotary handle and fixing without flange
9. Drilling template for circuit-breaker fixing on sheet

		A
With standard flange	IV	86
Without flange	IV	83.5

Overall dimensions

Tmax XT2 - Installation for plug-in circuit-breaker

Plug-in circuit-breaker fixing on sheet

Caption

1. Fixed part
2. Moving part

Fixing at 50mm		A
With standard flange	III - IV	136
Without flange	III - IV	133.5
	III - IV	141.5

Fixing at 70mm for extended front terminals		A
With standard flange	III - IV	156
Without flange	III - IV	153.5
	III - IV	161.5

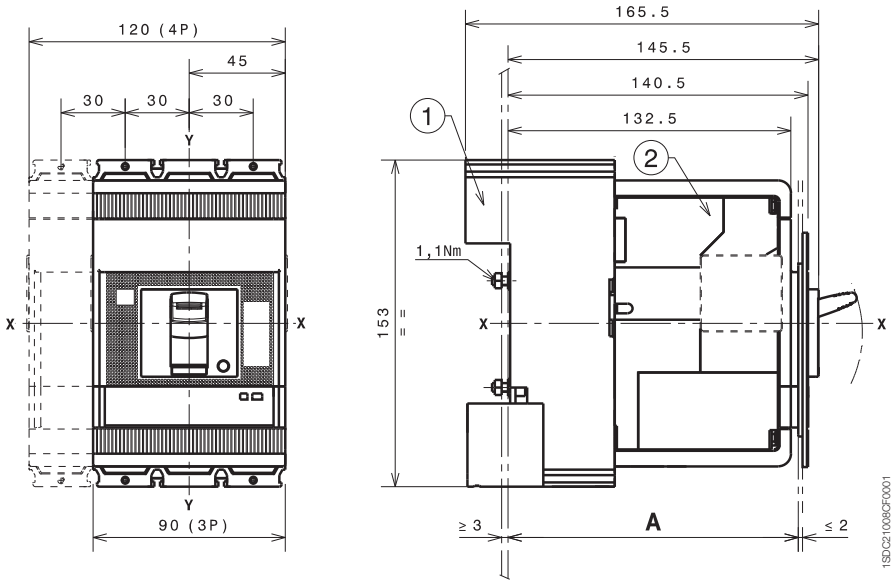

Drilling templates for support sheet

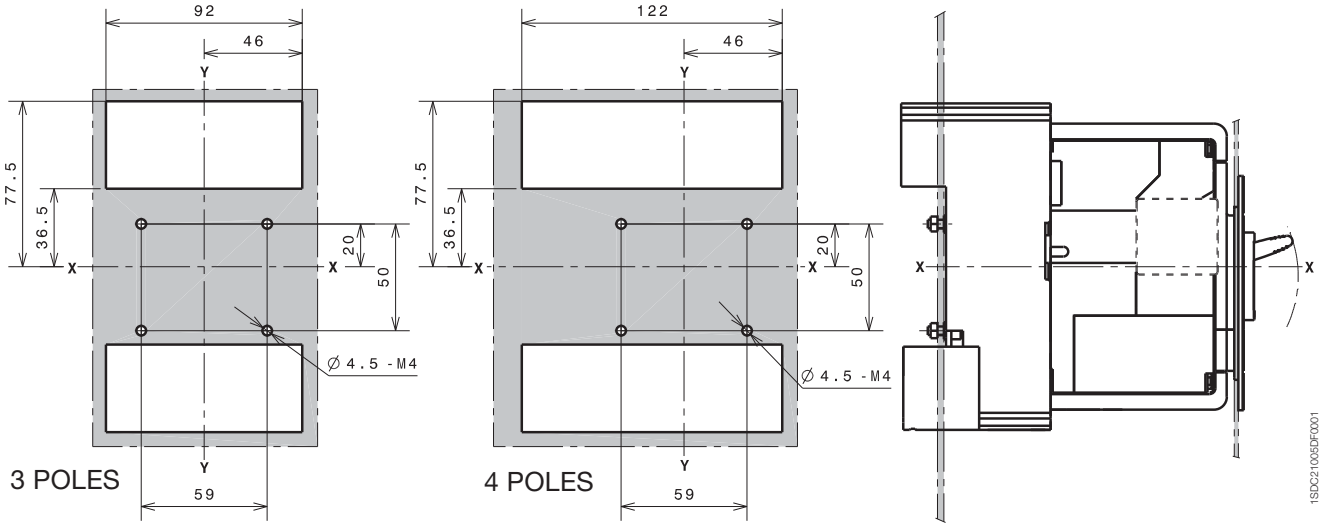

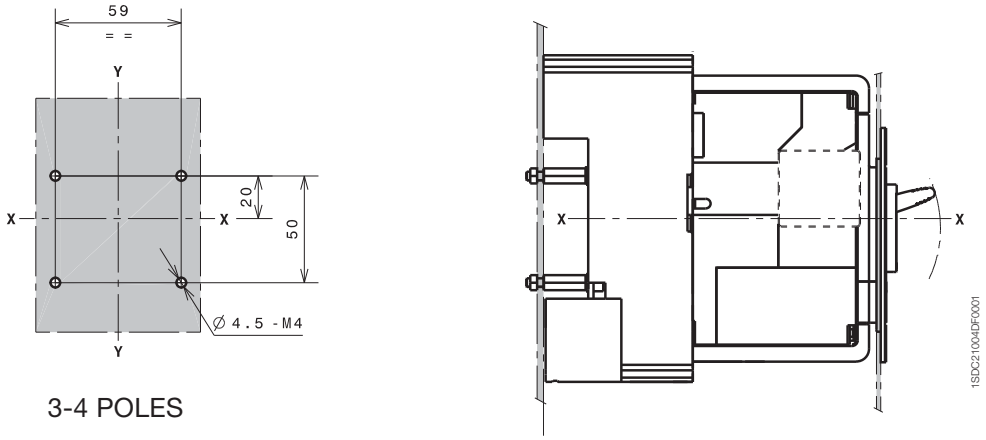

Overall dimensions

Tmax XT2 - Installation for plug-in circuit-breaker

Flanges

Caption

1. Flange for circuit-breaker rimovibile III
2. Flange for circuit-breaker IV
3. Flange for plug-in circuit-breaker III-IV with MOE and FLD
4. Flange for circuit-breaker III-IV with direct rotary handle (RHD)
8. Flange for circuit-breaker IV with residual current and plug-in with front terminals
9. Optional flange

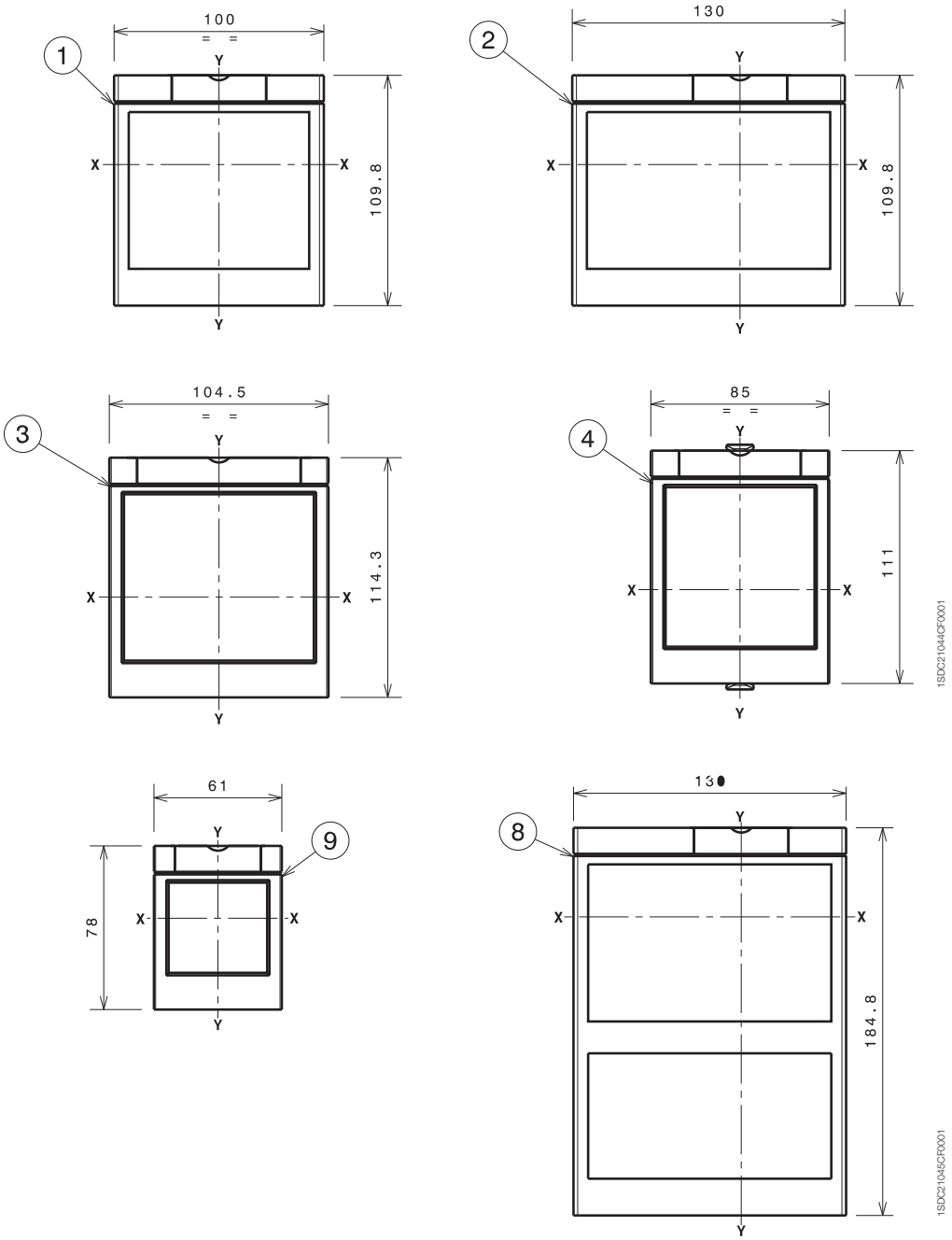

Overall dimensions

Tmax XT2 - Terminals for plug-in circuit-breaker

Drilling templates compartment door

With standard flange

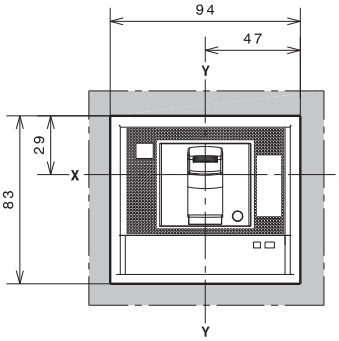

B=136 C=156
3 POLES

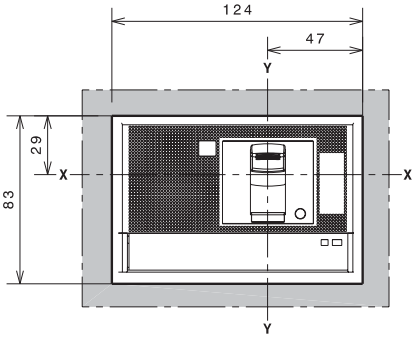

B=136 C=156
4 POLES

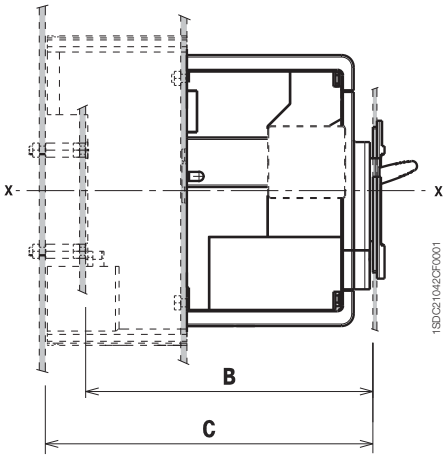

Without flange

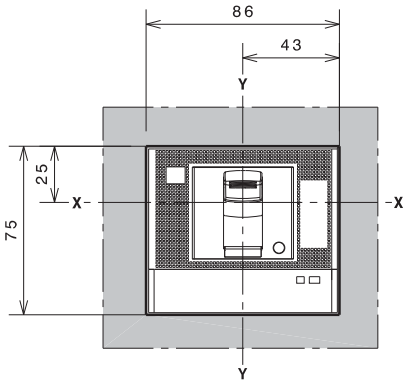

B=133.5 C=155.5
3 POLES

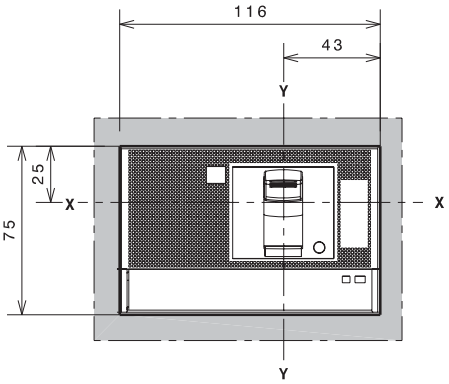

B=133.5 C=155.5
4 POLES

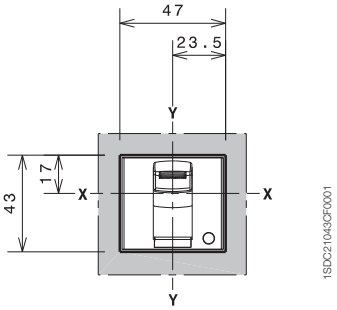

B=141.5 C=101.5
3-4 POLES

With optional flange

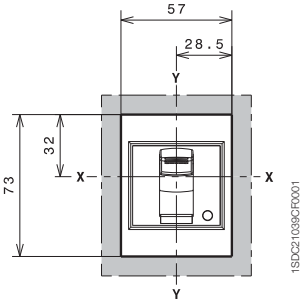

B=142 C=162
3-4 POLES

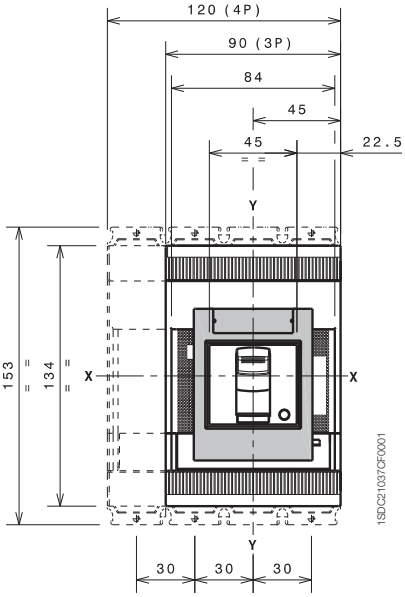

Overall dimensions

Tmax XT2 - Terminals for plug-in circuit-breaker

Terminals EF

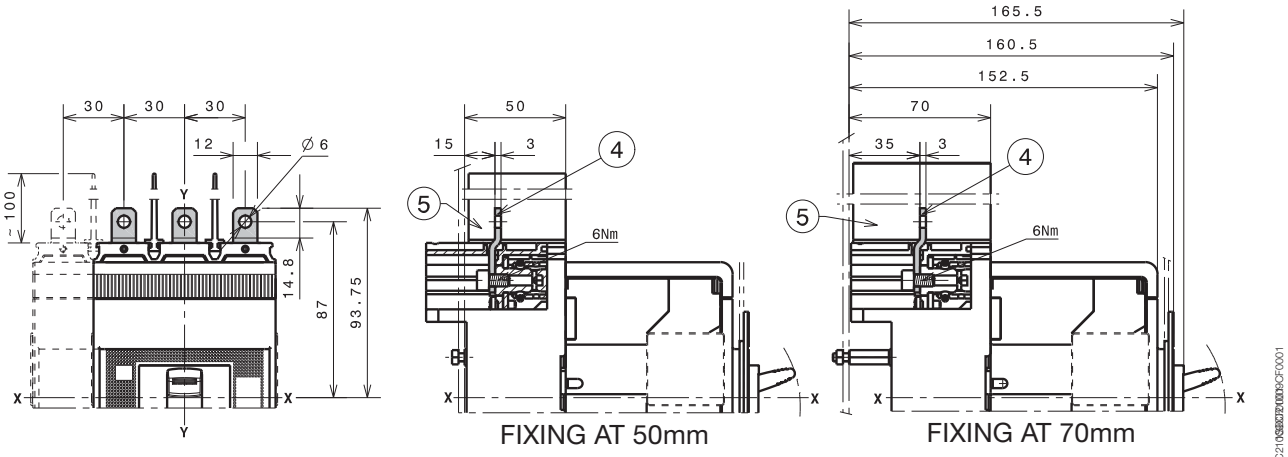

Caption

(4) Front extended terminals

(5) 100mm insulating barriers between phases (compulsory) provided

Note: insulated plate (compulsory) provided

Terminals ES

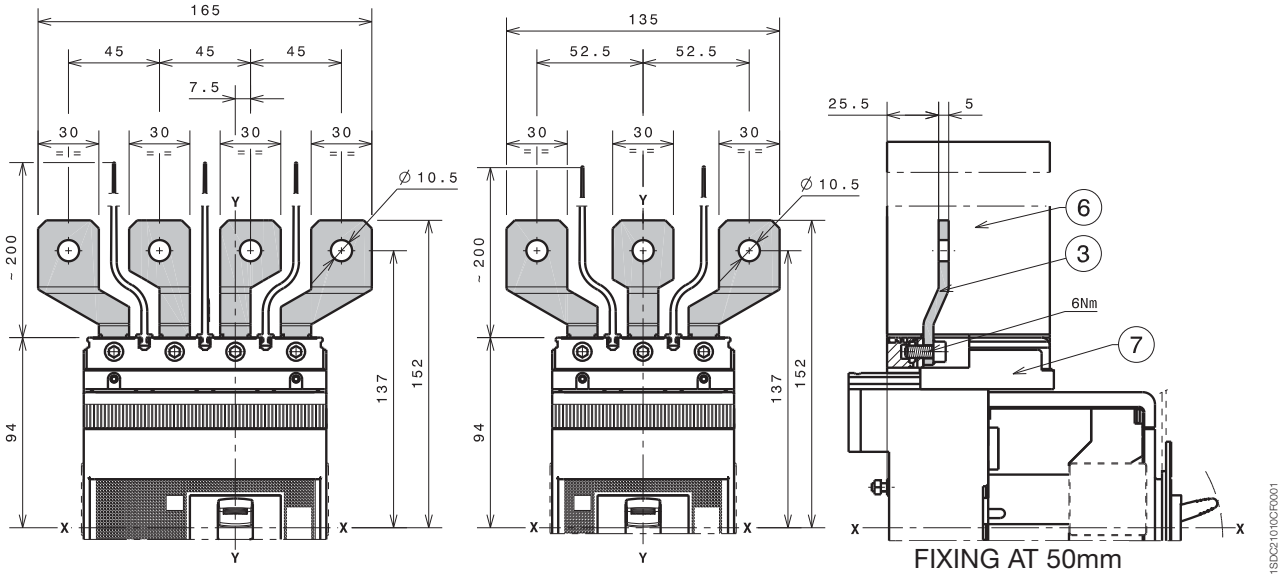

Caption

(3) Front extended spread terminals

(6) 200mm insulating barriers between phases (compulsory) provided

(7) Adaptor (compulsory) not provided

Note: insulated plate (compulsory) provided

1x1...95mm² terminals FCCuAl

Caption

1. 1x1...95mm² front terminal FCCuAl
2. 25mm insulating barriers between phases (compulsory) provided
6. Adaptor (compulsory) not provided

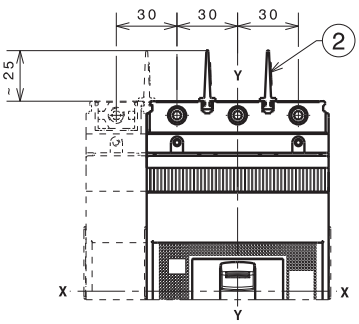

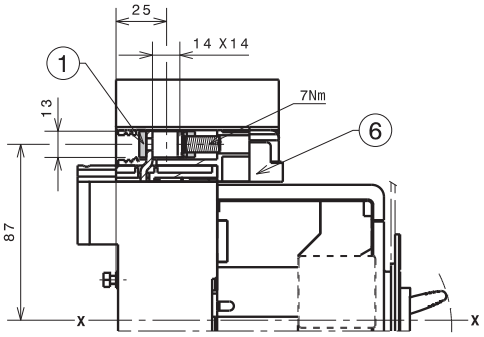

FIXING AT 50mm

1x70...185mm² terminals FCCuAl

Caption

1. External terminal FCCuAl
2. High terminal covers with degree of protection IP40 (optional) provided

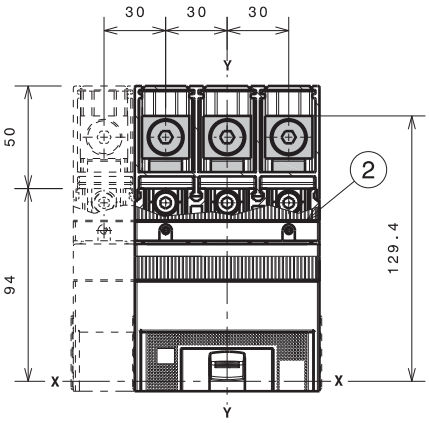

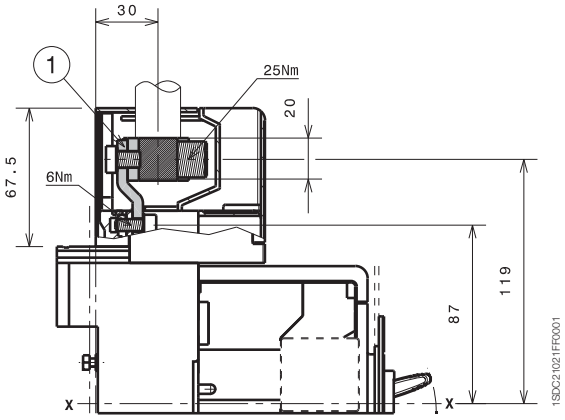

2x35...95mm² terminals FCCuAl

Caption

1. External terminal FCCuAl
2. High terminal covers with degree of protection IP40 (optional) provided

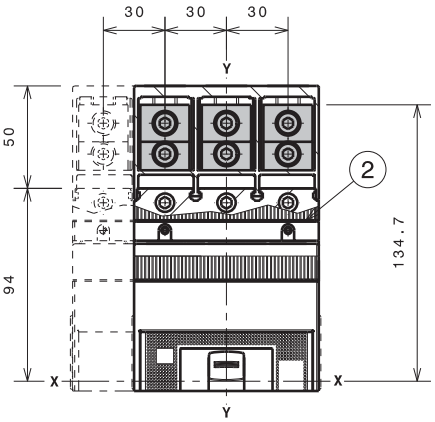

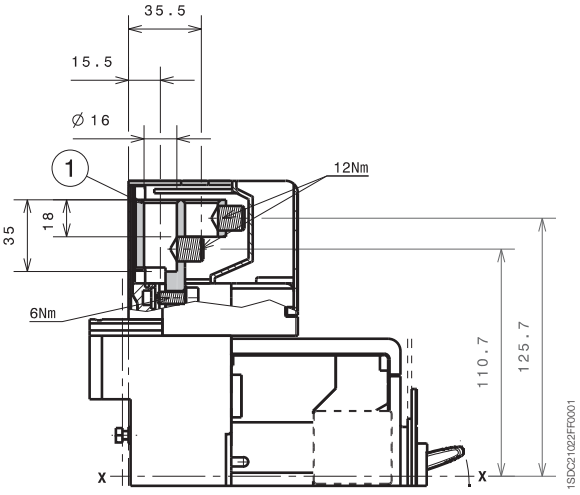

Overall dimensions

Tmax XT2 - Terminals for plug-in circuit-breaker

Terminals FCCu

Caption

(5) Terminals FCCu

(6) Adaptor (compulsory) not provided

Note: 25mm insulating barriers between phases (compulsory) provided as standard with the circuit-breaker

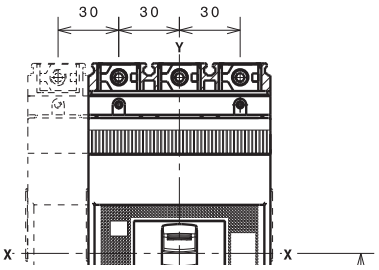

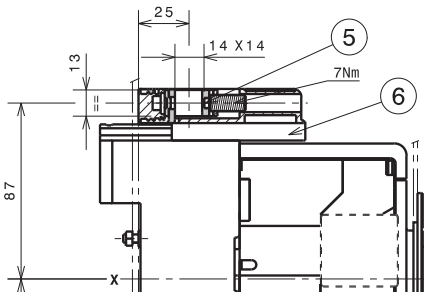

Terminals MC

Caption

(3) High terminal covers with degree of protection IP40 (optional) provided

(4) Multicable terminals

(6) Adaptor (compulsory) not provided

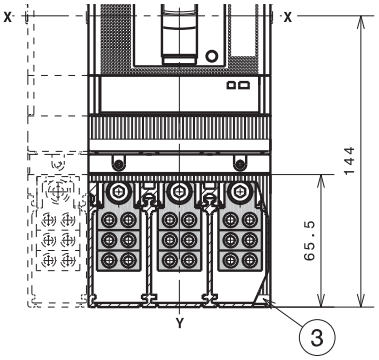

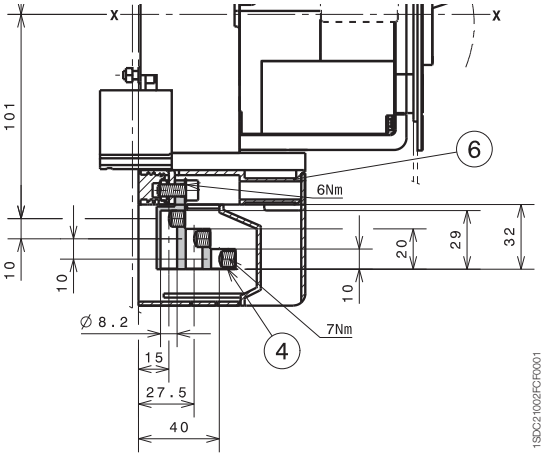

FIXING AT 50mm

Terminals HR/VR

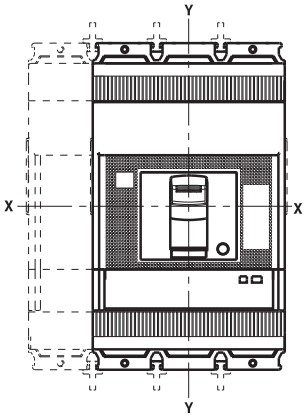

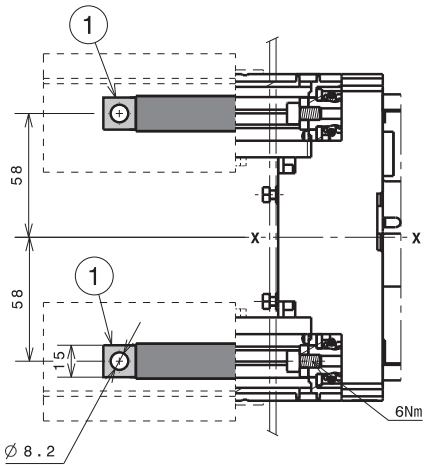

FIXING AT 50mm

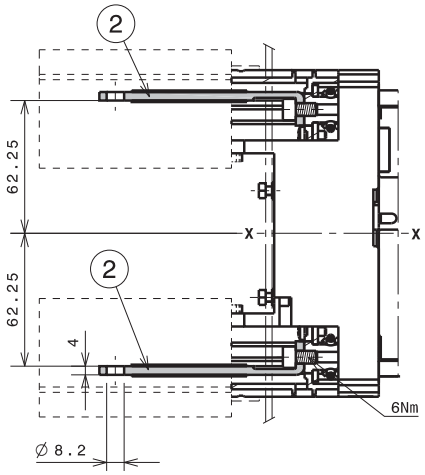

FIXING AT 50mm

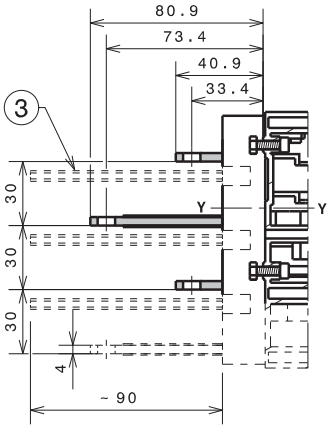

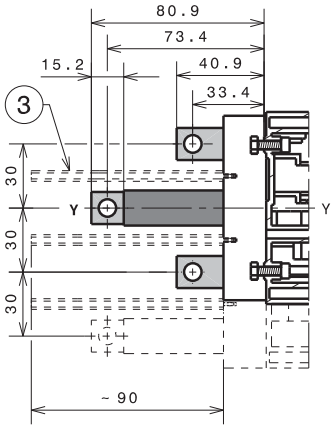

1SDC21012CF0001

Caption

1. Rear vertical terminals
2. Rear horizontal terminals
3. 90mm insulating barriers between phases (compulsory) not provided

Overall dimensions

Tmax XT2 - Accessories for plug-in circuit-breaker

Stored energy motor operator (MOE)

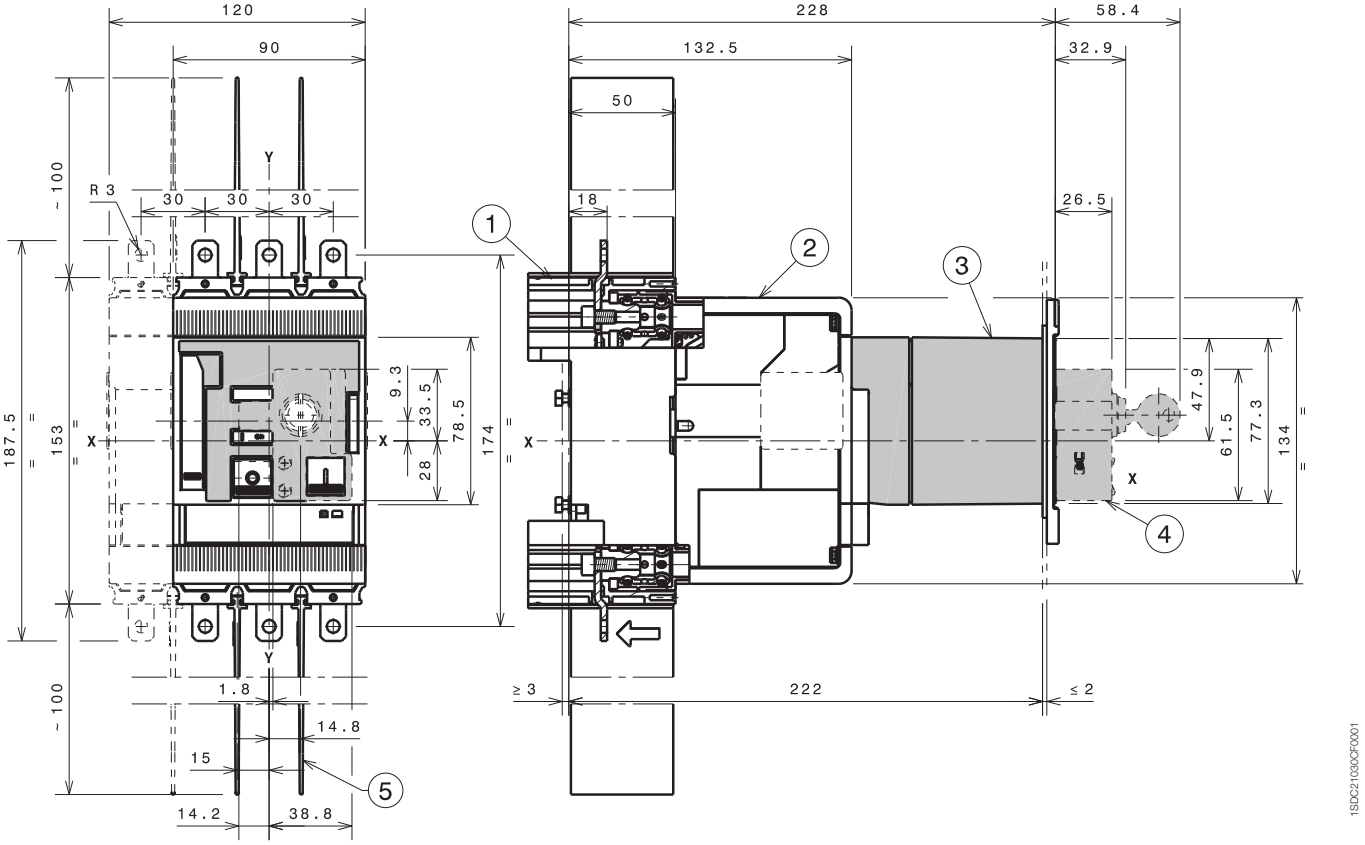

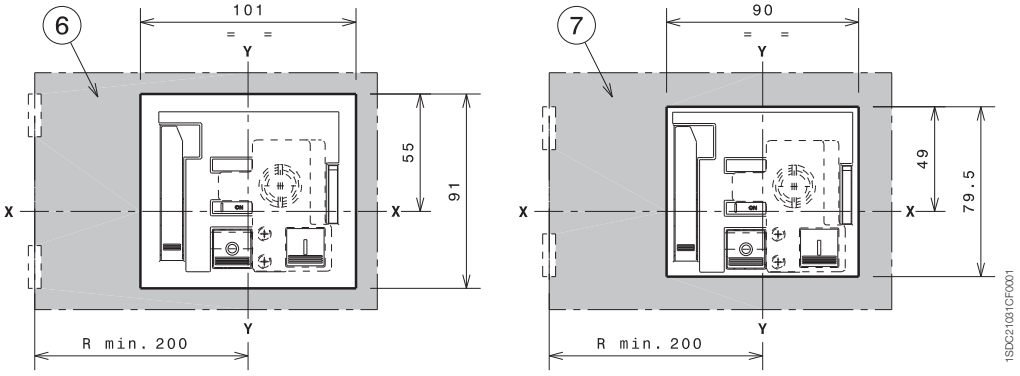

Caption

1. Fixed part
2. Moving part
3. MOE
4. Key lock optional
5. 100mm insulating barriers between phases (compulsory) provided
6. Drilling template of door with direct rotary handle with flange
7. Drilling template of door with direct rotary handle without flange

Front for lever operating mechanism (FLD)

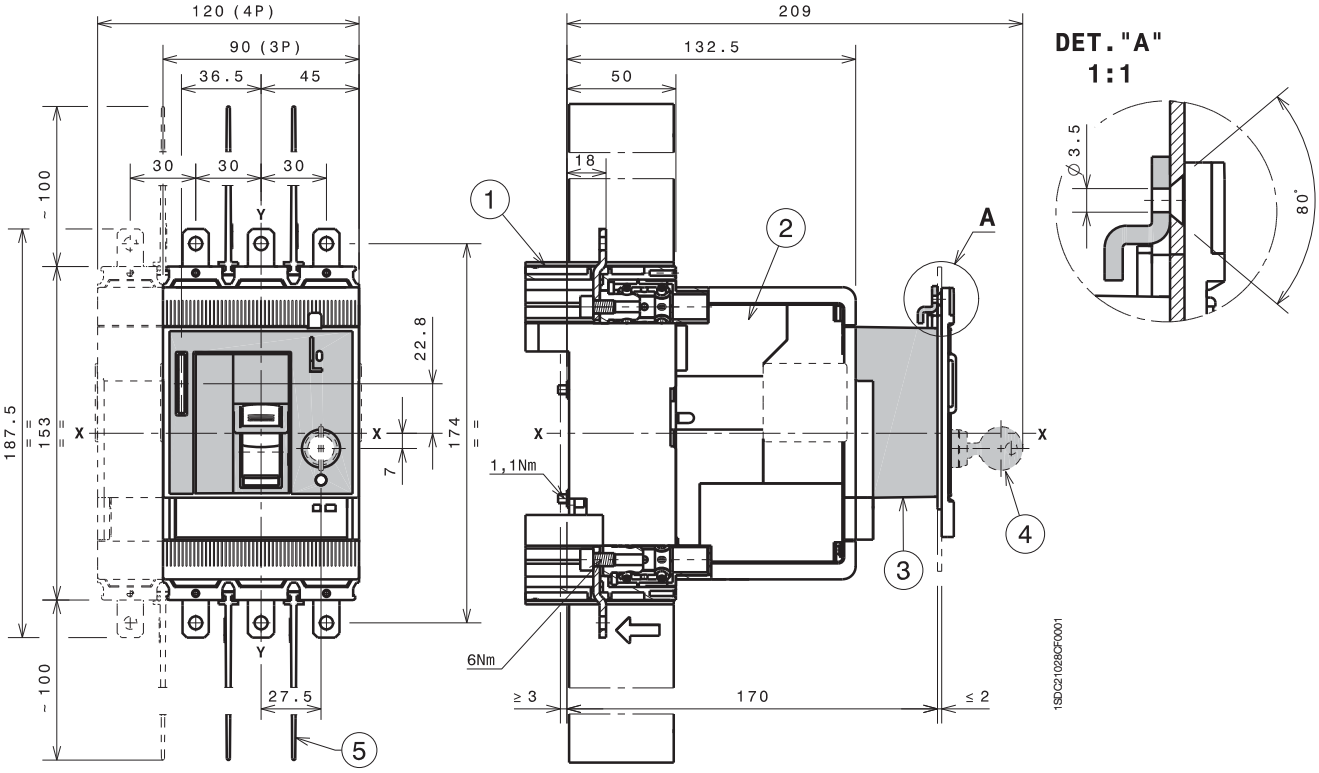

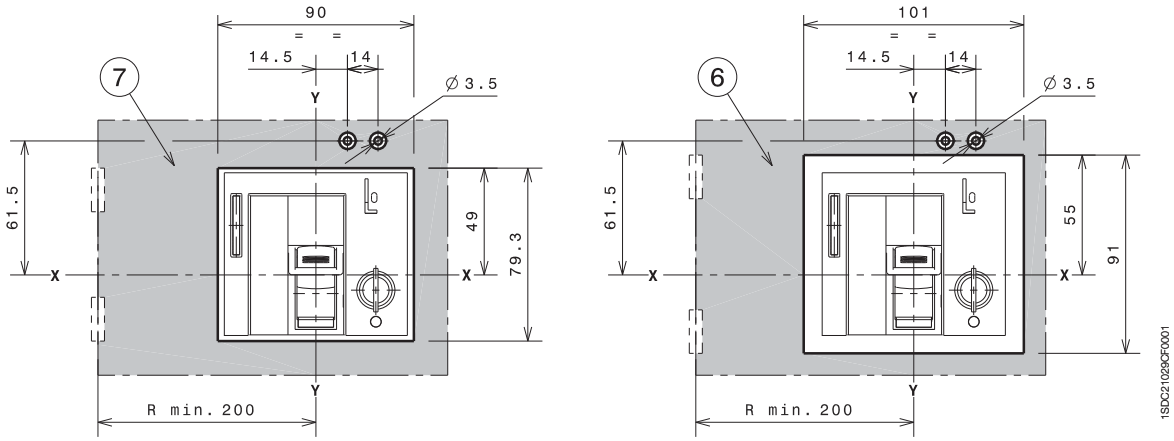

Caption

1. Fixed part
2. Moving part
3. Front for lever operating mechanism (FLD)
4. Key lock optional
5. 100mm insulating barriers between phases (compulsory) provided
6. Drilling template of door with direct rotary handle with flange
7. Drilling template of door with direct rotary handle without flange

Overall dimensions

Tmax XT2 - Accessories for plug-in circuit-breaker

Residual current RC Sel

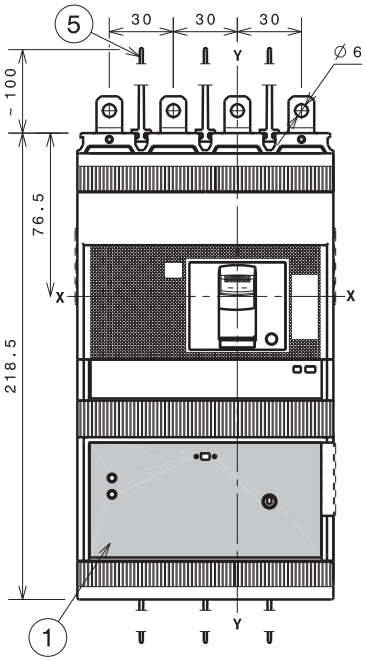

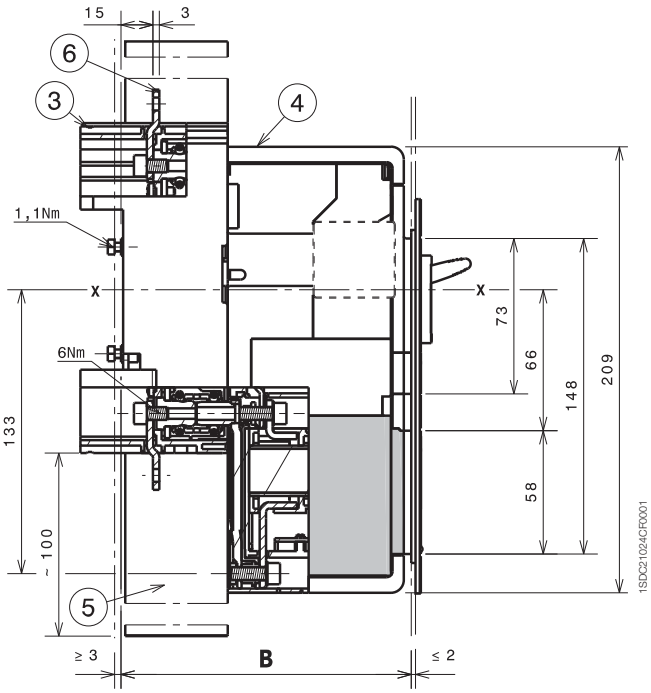

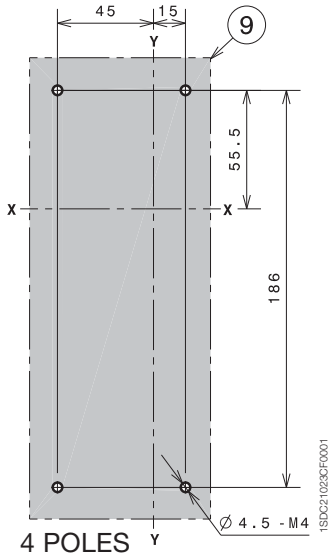

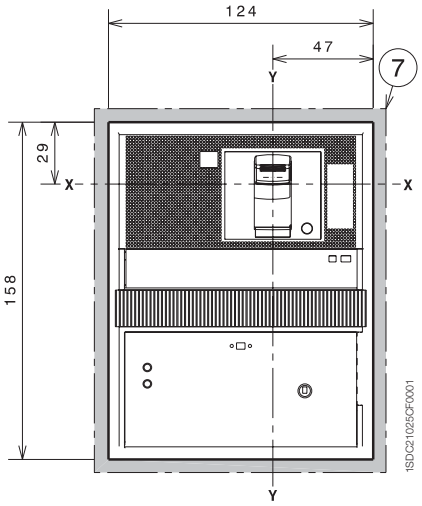

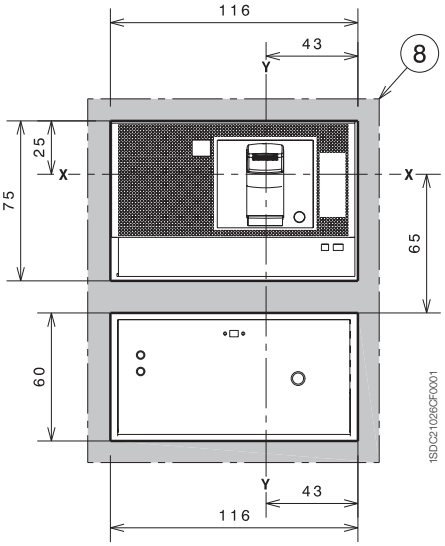

Caption

1. Residual current
3. Fixed part
4. Moving part
5. 100mm insulating barriers between phases (compulsory) provided
6. Extended terminals
7. Drilling template of door with direct rotary handle and fixing with flange
8. Drilling template of door with direct rotary handle and fixing without flange
9. Drilling template for circuit-breaker fixing on sheet

		A
With standard flange	IV	136
Without flange	IV	133,5

Overall dimensions

Tmax XT2 - Installation for withdrawable circuit-breaker

Fixing on sheet

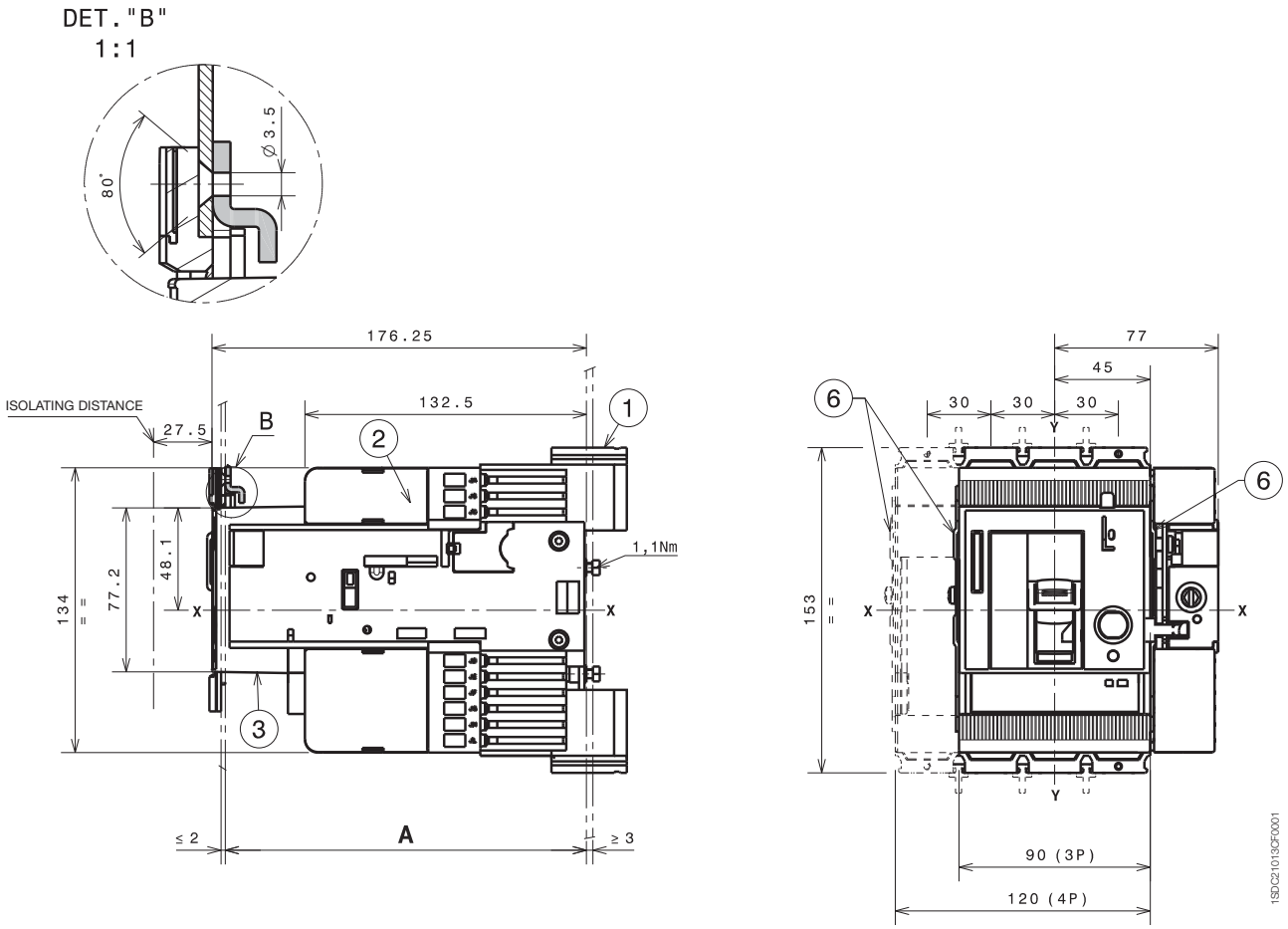

Caption

1. Fixed part
2. Moving part
3. FLD (FLD o RHD o RHE o MOE) mandatory for withdrawable version
6. Optional wiring ducts

			A
With standard flange	III - IV	Fixing at 50mm	170
	III - IV	Fixing at 70mm for extended front terminals	190

Overall dimensions

Tmax XT2 - Installation for withdrawable circuit-breaker

Drilling templates for support sheet

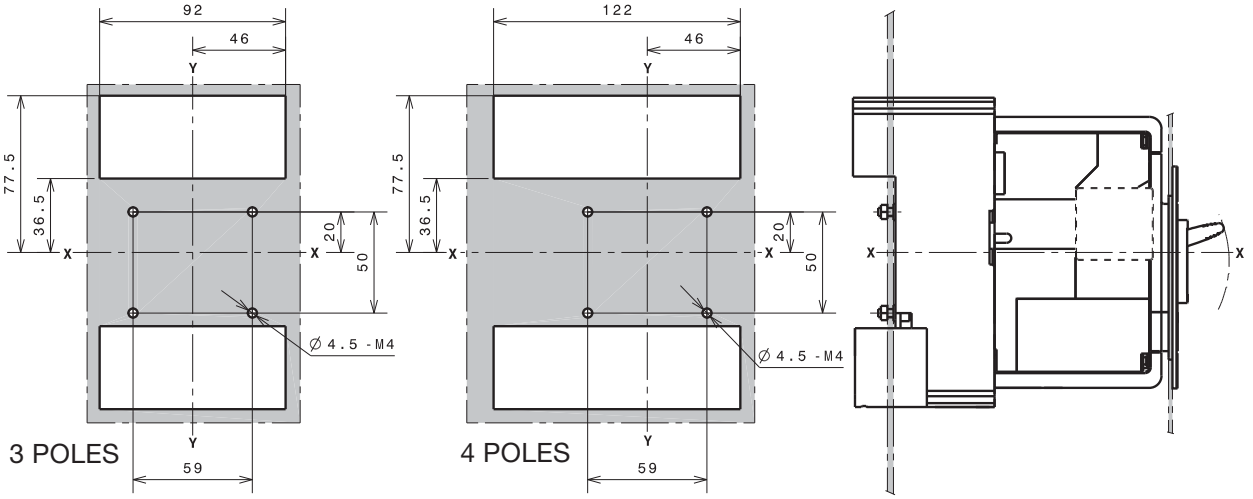

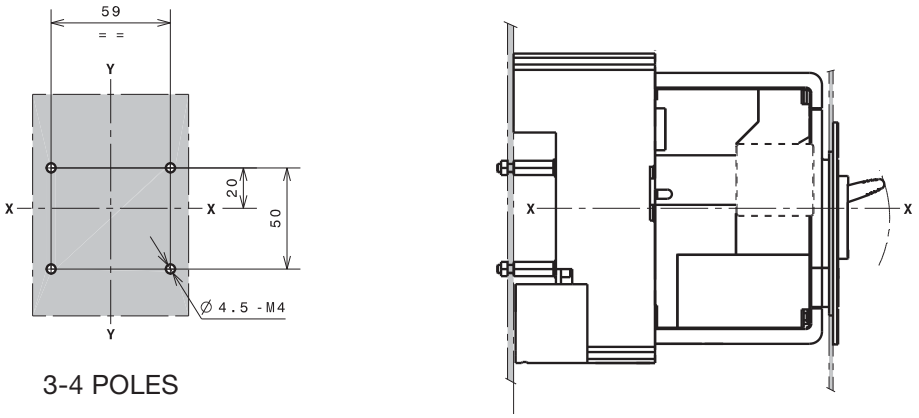

Flanges

Caption

(5) Flange for circuit-breaker III-IV withdrawable

(6) Flange for circuit-breaker withdrawable III-IV with direct rotary handle RHD

(7) Flange for circuit-breaker residual current IV withdrawable with front extended terminals

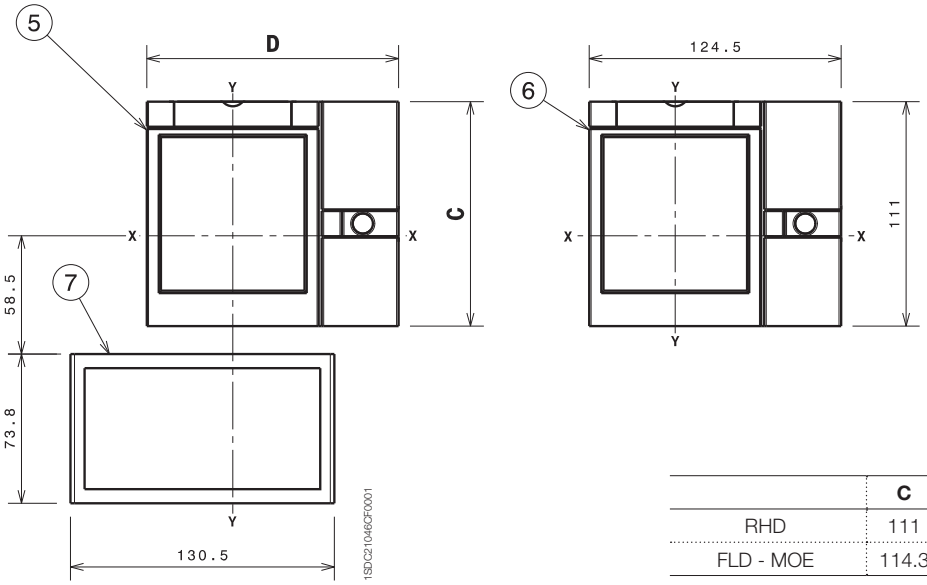

	C	D
RHD	111	124.5
FLD - MOE	114.3	134.5

Drilling templates compartment door

With standard flange

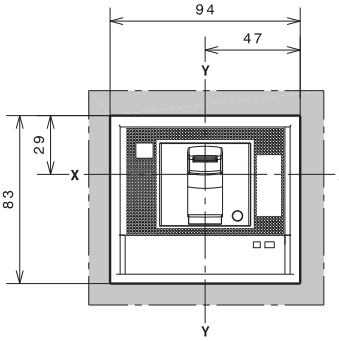

B=136 C=156
3 POLES

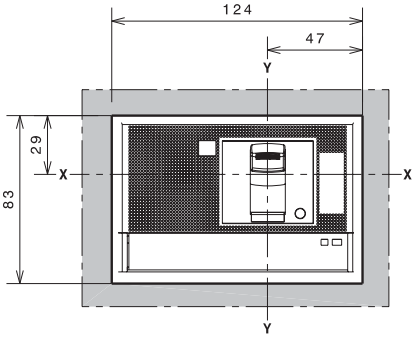

B=136 C=156
4 POLES

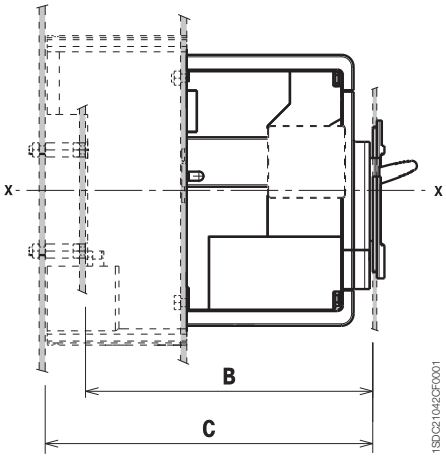

Without flange

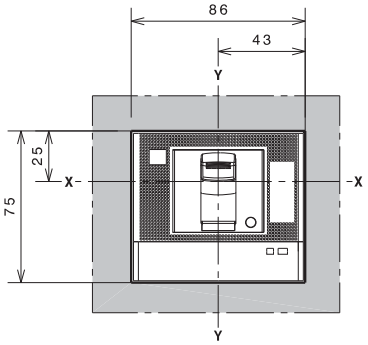

B=133.5 C=155.5
3 POLES

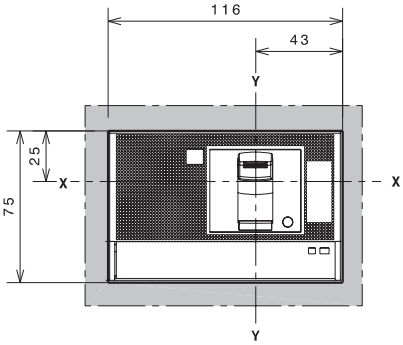

B=133.5 C=155.5
4 POLES

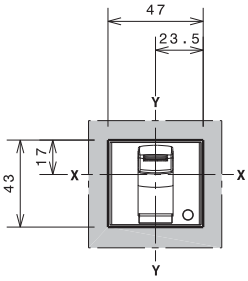

B=141.5 C=101.5
3-4 POLES

With standard flange

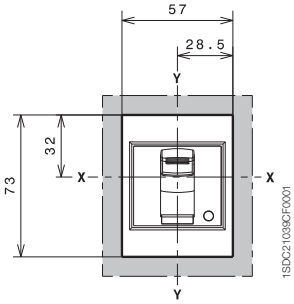

B=142 C=162
3-4 POLES

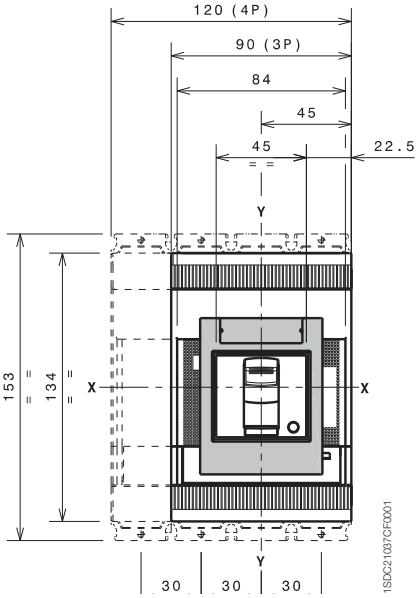

Overall dimensions

Tmax XT2 - Terminals for withdrawable circuit-breaker

Terminals EF

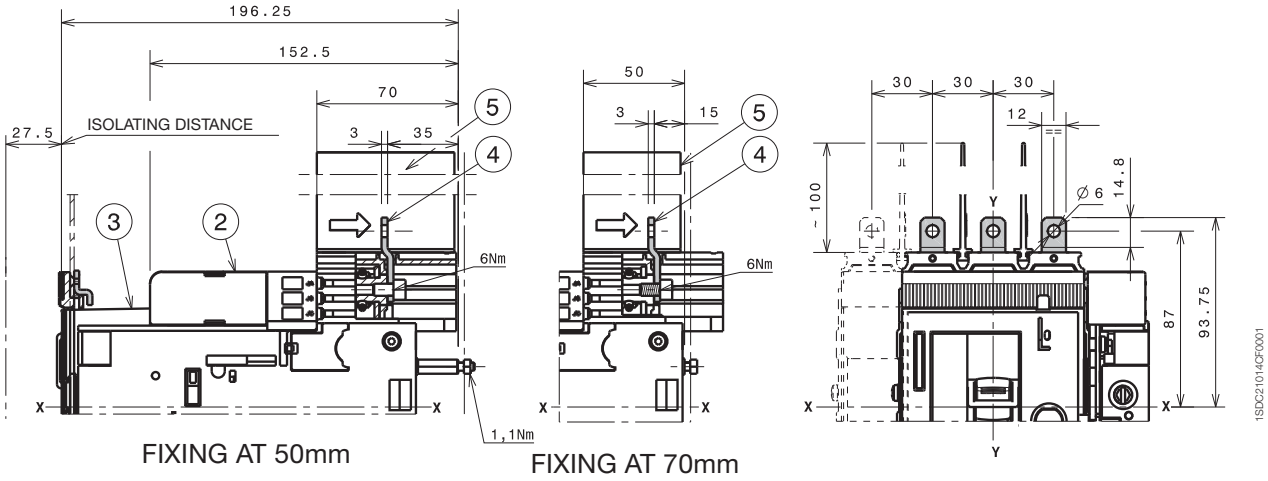

Caption

(2) Moving part

(3) FLD (FLD or RHD or RHE or MOE) mandatory for withdrawable version

(4) Front extended terminals

(5) 100mm insulating barriers between phases (compulsory) provided

Note: insulated plate (compulsory) provided

Terminals ES

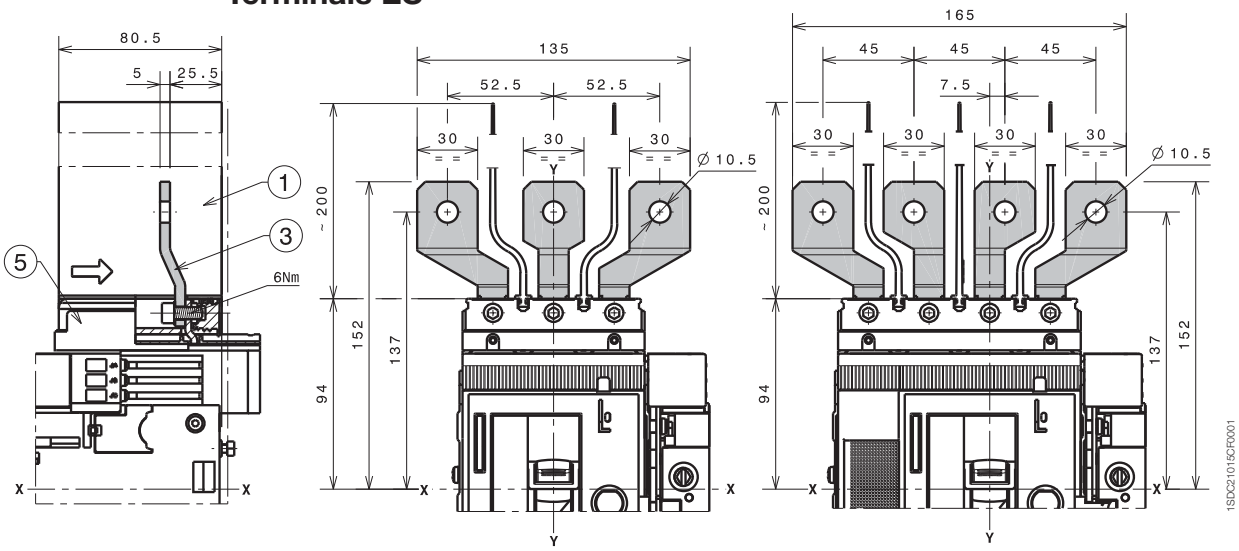

Caption

(1) 200mm insulating barriers between phases (compulsory) provided

(3) Front extended spread terminals

(5) Adaptor (compulsory) not provided

Note: insulated plate (compulsory) provided

1x1...95mm² terminals FCCuAl

Caption

(2) 25mm insulating barriers between phases (compulsory) provided

(4) 1x1...95mm² front terminals FcCuAl

(5) Adaptor (compulsory) not provided

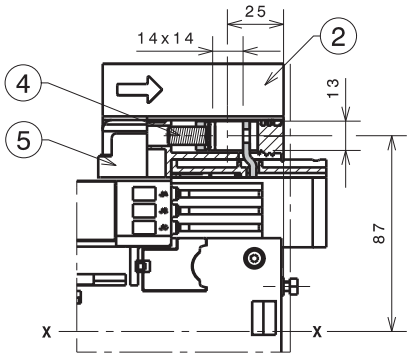

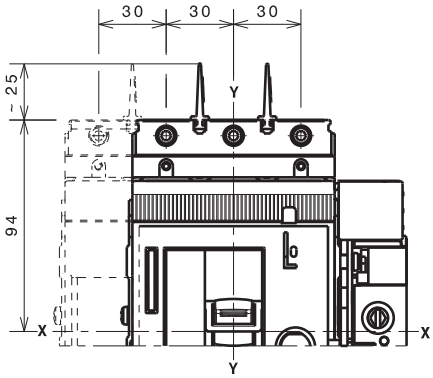

FIXING AT 50mm

1x70...185mm² terminals FCCuAl

Caption

(1) External terminal FCCuAl

(2) High terminal covers with degree of protection IP40 (optional) provided

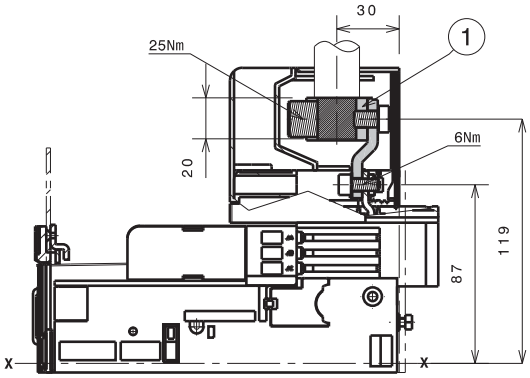

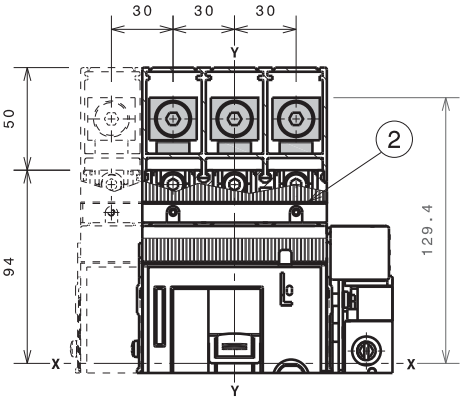

2x35...95mm² terminals FCCuAl

Caption

(1) External terminal FCCuAl 2x95mm²

(2) High terminal covers with degree of protection IP40 (optional) provided

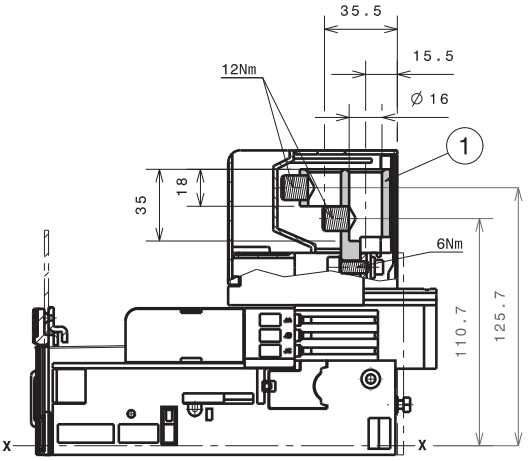

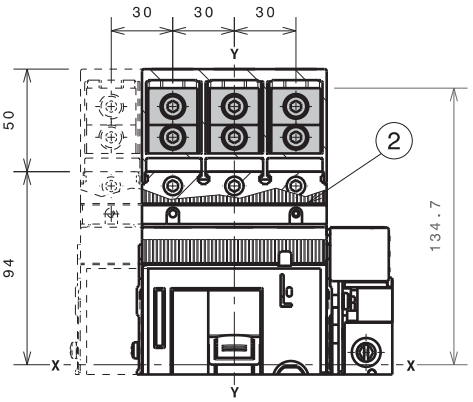

Overall dimensions

Tmax XT2 - Terminals for withdrawable circuit-breaker

Terminals FCCu

Caption

(2) Terminals FCCu

(4) Adaptor (compulsory) not provided

Note: 25mm insulating barriers between phases (compulsory) provided as standard with the circuit-breaker

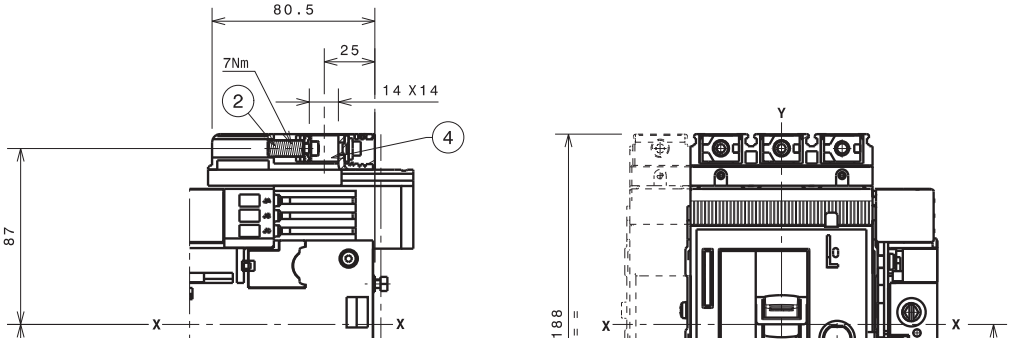

Terminals MC

Caption

(1) Multicable terminals

(3) High terminal covers with degree of protection IP40 (optional) provided

(4) Adaptor (compulsory) not provided

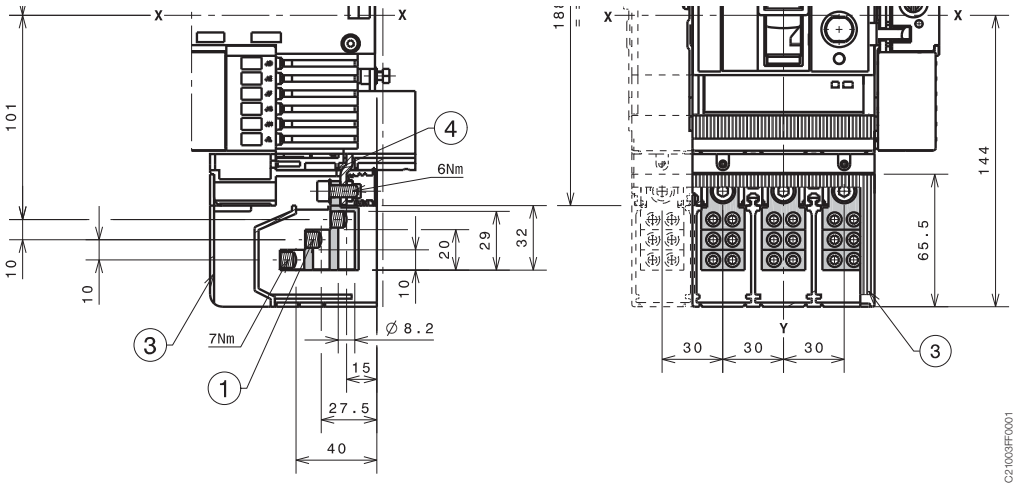

FIXING AT 50mm

1SDC21003FF0001

Terminals HR/VR

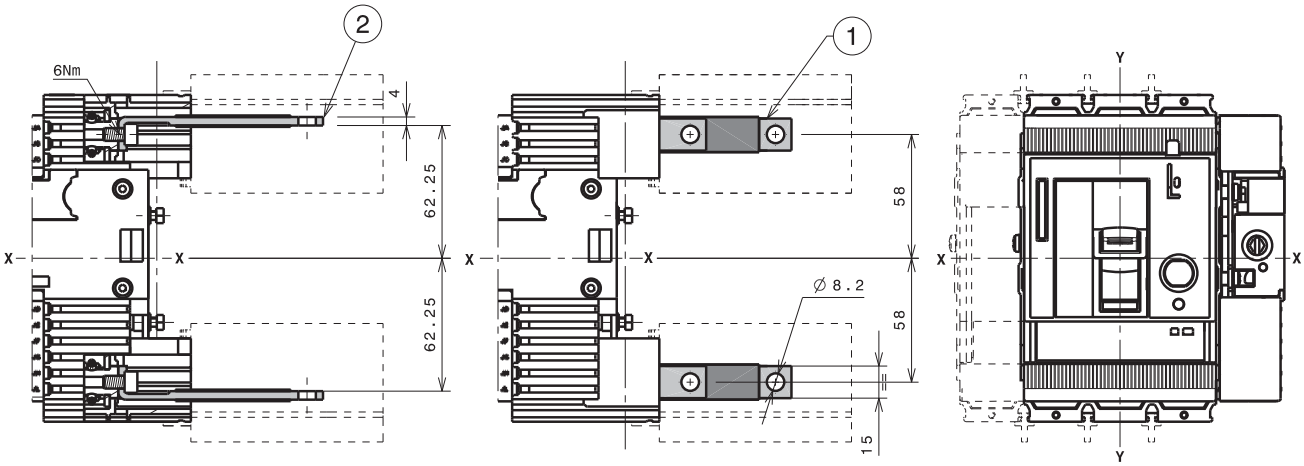

FIXING AT 50mm

FIXING AT 50mm

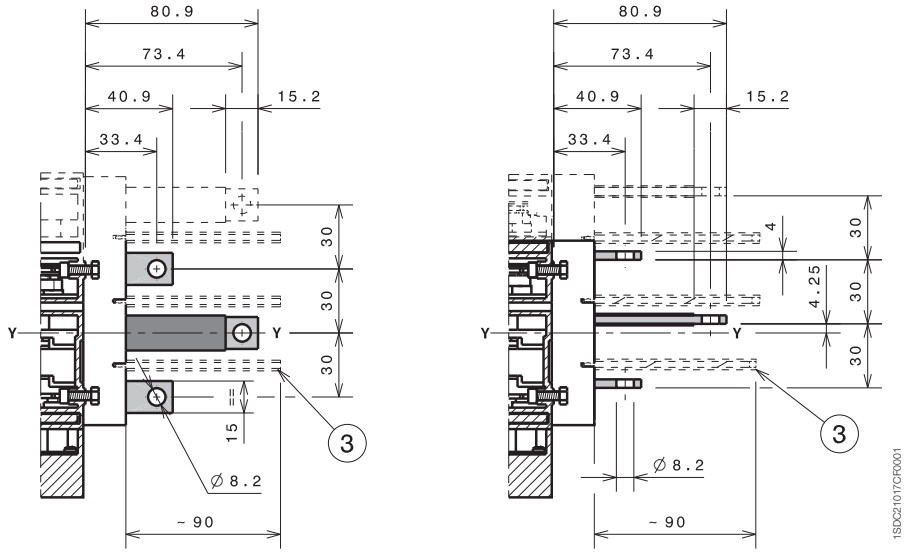

Caption

1. Rear vertical terminals
2. Rear horizontal terminals
3. 90mm insulating barriers between phases (compulsory) not provided

Overall dimensions

Tmax XT2 - Accessories for withdrawable circuit-breaker

Rotary handle operating mechanism on circuit-breakers (RHD)

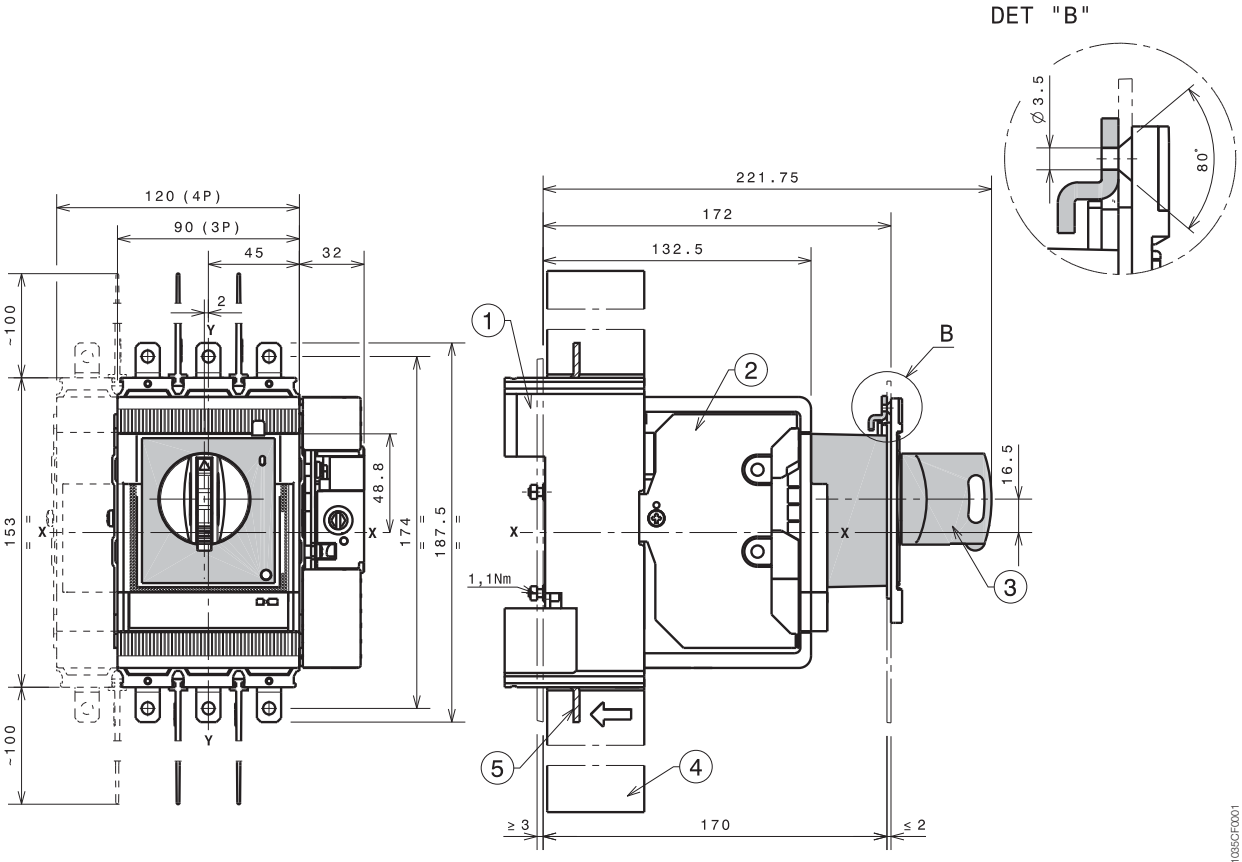

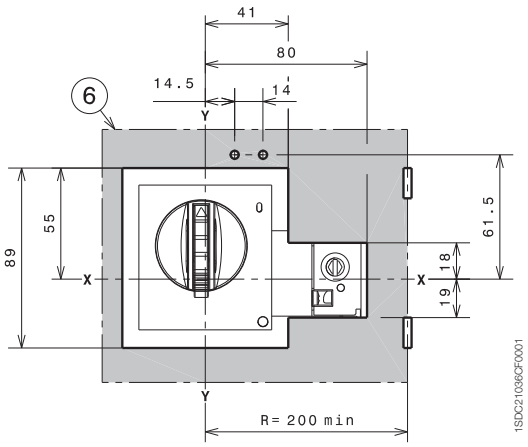

Caption

1. Fixed part
2. Moving part
3. Rotary handle operating mechanism on circuit-breaker
4. 100mm insulating barriers between phases (compulsory) provided
5. Extended terminals
6. Drilling template of door with direct rotary handle

Rotary handle operating mechanism on the compartment door (RHE)

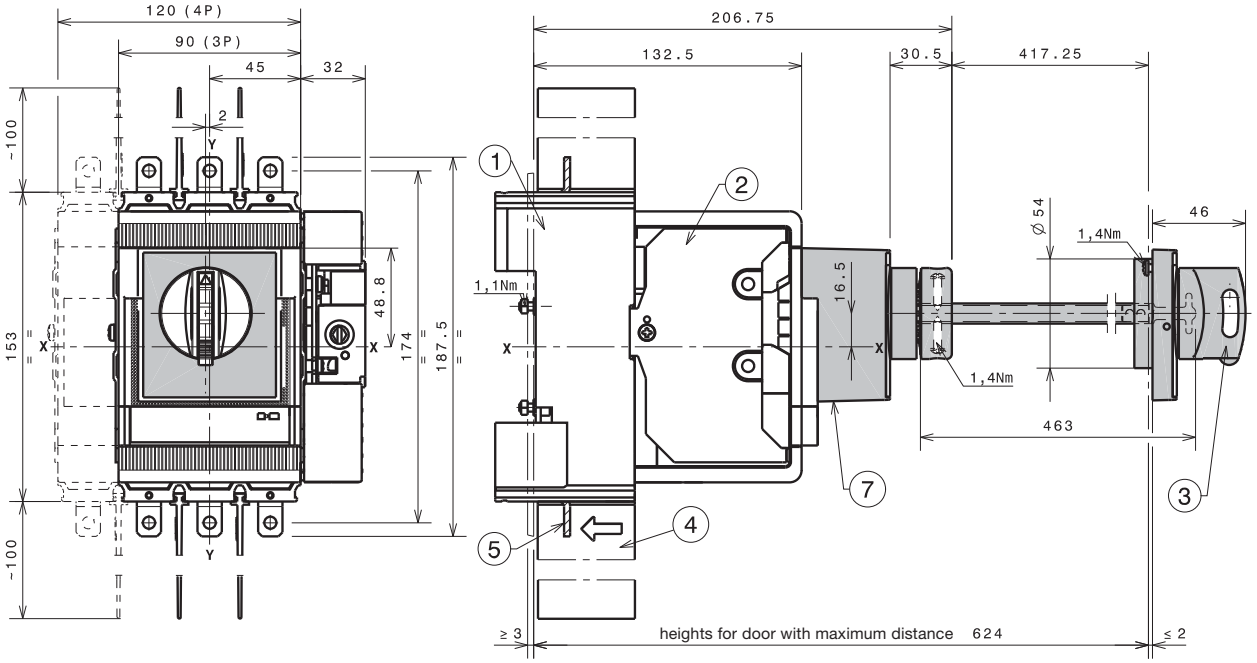

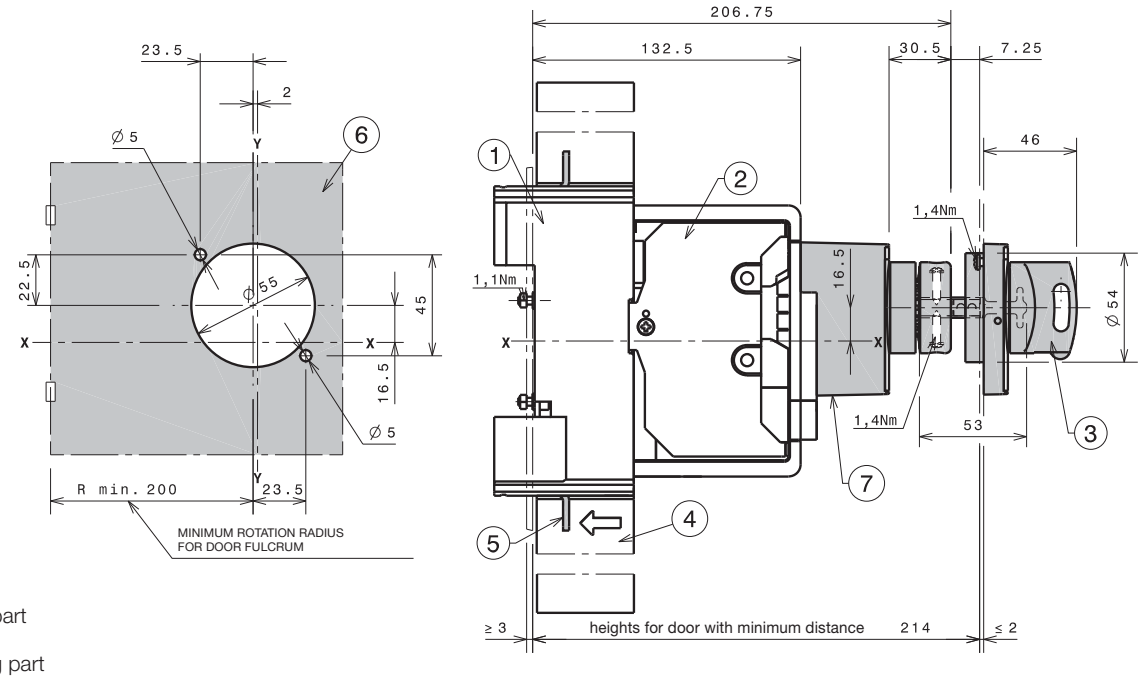

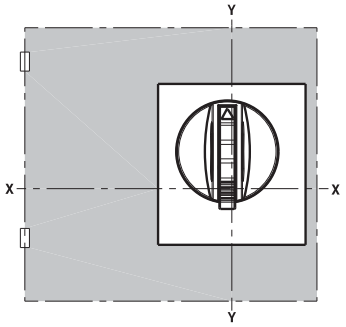

Caption

1. Fixed part
2. Moving part
3. Rotary handle operating mechanism on the compartment door (RHE)
4. 100mm insulating barriers between phases (compulsory) provided
5. Extended terminals
6. Door drilling template with transmetted rotary handle
7. Transmission unit

1SDC21034CF0001

Overall dimensions

Tmax XT2 - Accessories for withdrawable circuit-breaker

Stored energy motor operator (MOE)

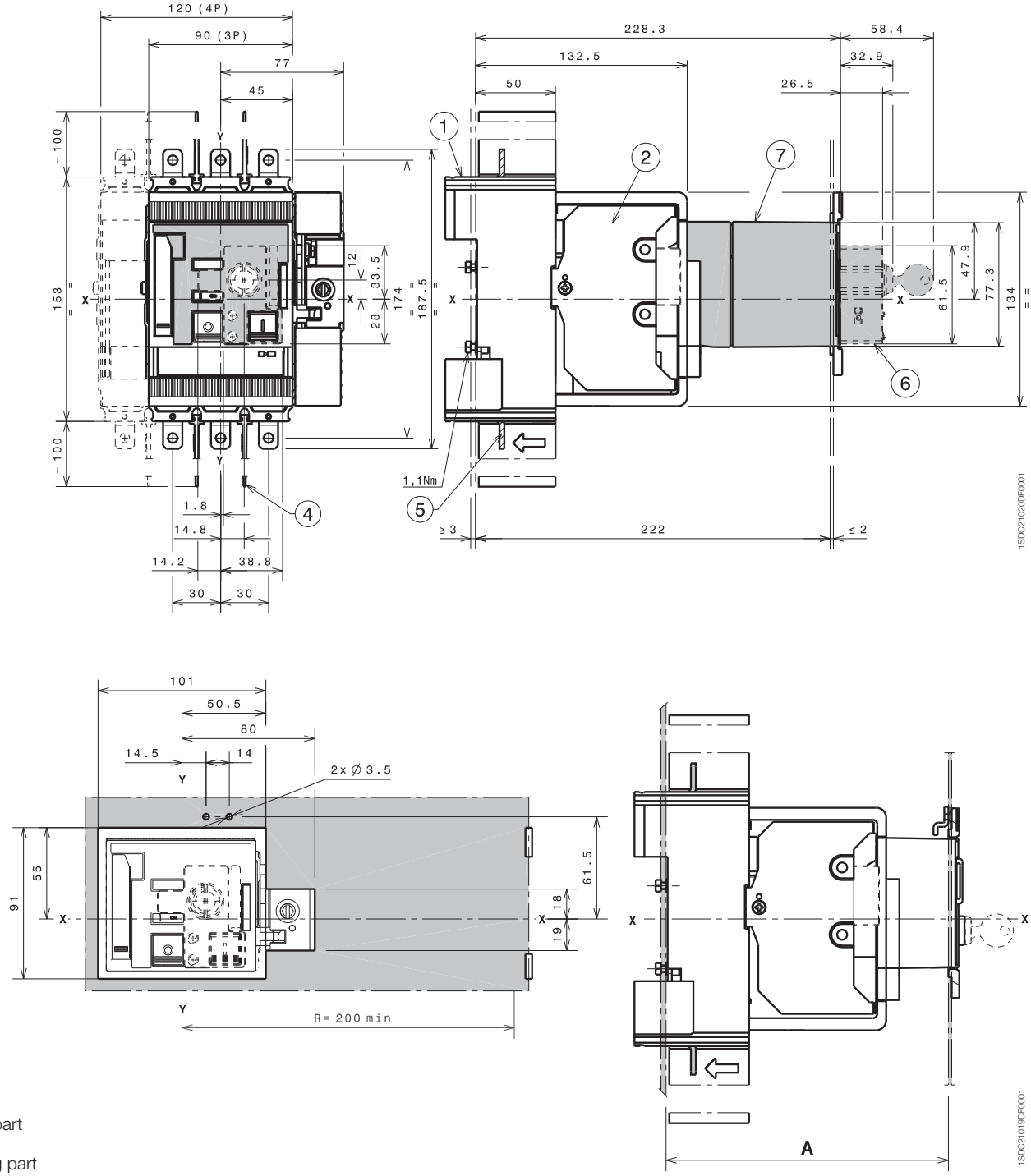

Caption

1. Fixed part
2. Moving part
4. 100mm insulating barriers between phases (compulsory) provided
5. Extended terminals
6. Key lock optional
7. Stored energy motor operator (MOE)

		A
Motor operator MOE	III - IV	222

Front for lever operating (FLD)

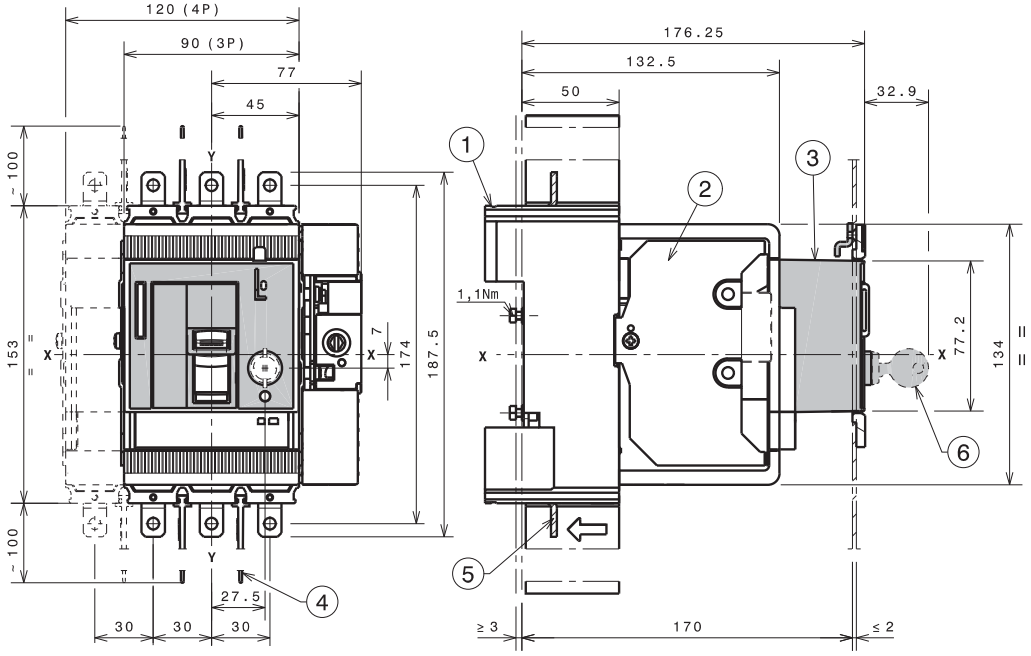

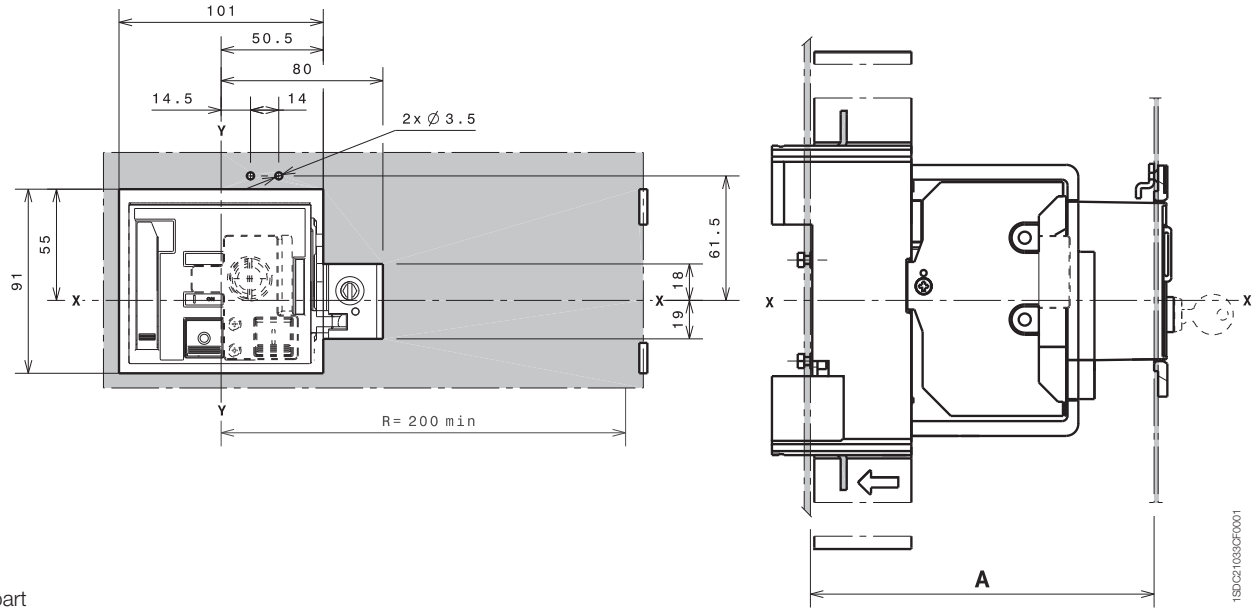

Caption

1. Fixed part
2. Moving part
3. Front for lever operating (FLD)
4. 100mm insulating barriers between phases (compulsory) provided
5. Extended terminals
6. Key lock optional

		A
Front for lever operating FLD	III - IV	170

Overall dimensions

Tmax XT2 - Accessories for withdrawable circuit-breaker

Residual current RC Sel 4 poles

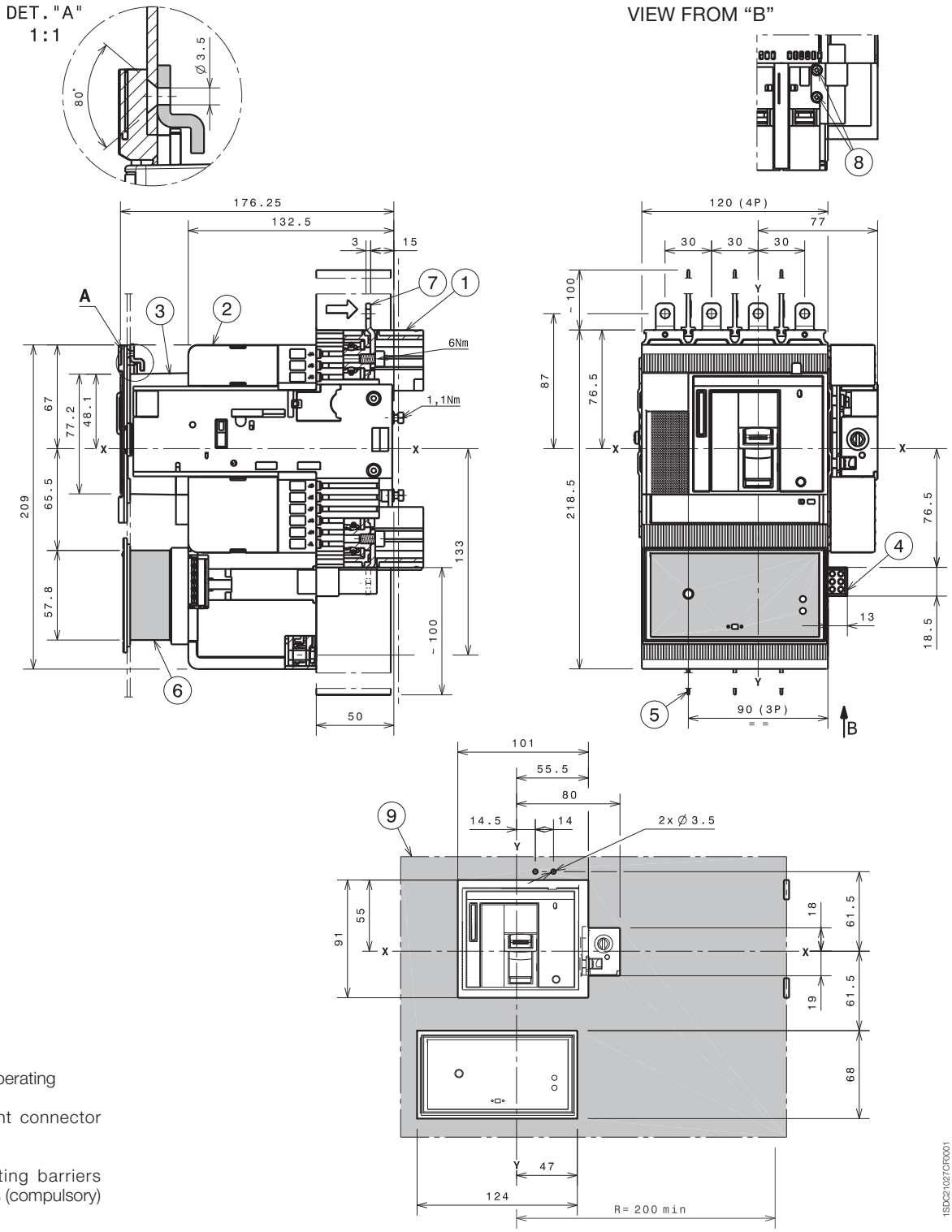

Caption

1. Fixed part
2. Moving part
3. Front for lever operating
4. Residual current connector (optional)
5. 100mm insulating barriers between phases (compulsory) provided
6. Residual current
7. Extended terminals
8. Fixing screws for fixed part of connector
9. Door drilling template and flange fixing

Overall dimensions

Tmax XT3 - Installation for fixed circuit-breaker

Fixing on sheet

Caption

(2) Overall dimension of optional wiring ducts

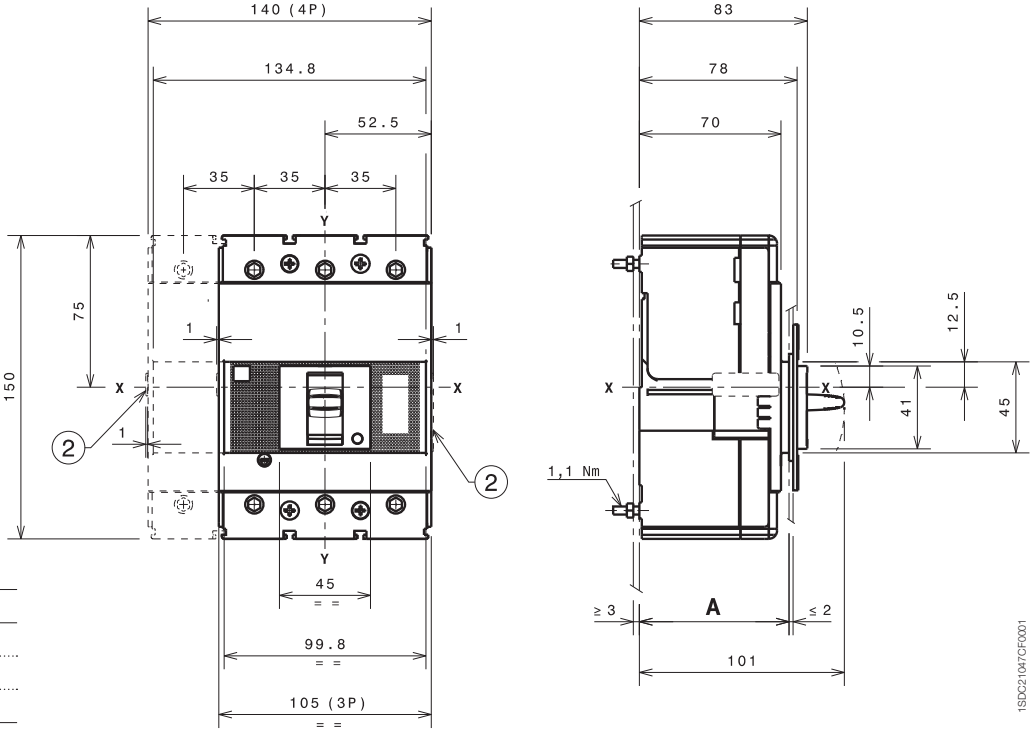

		A
With standard flange	III - IV	74
Without flange	III - IV	71
	III - IV	79

Fixing on DIN EN 50022 rail

Caption

(1) Bracket for fixing

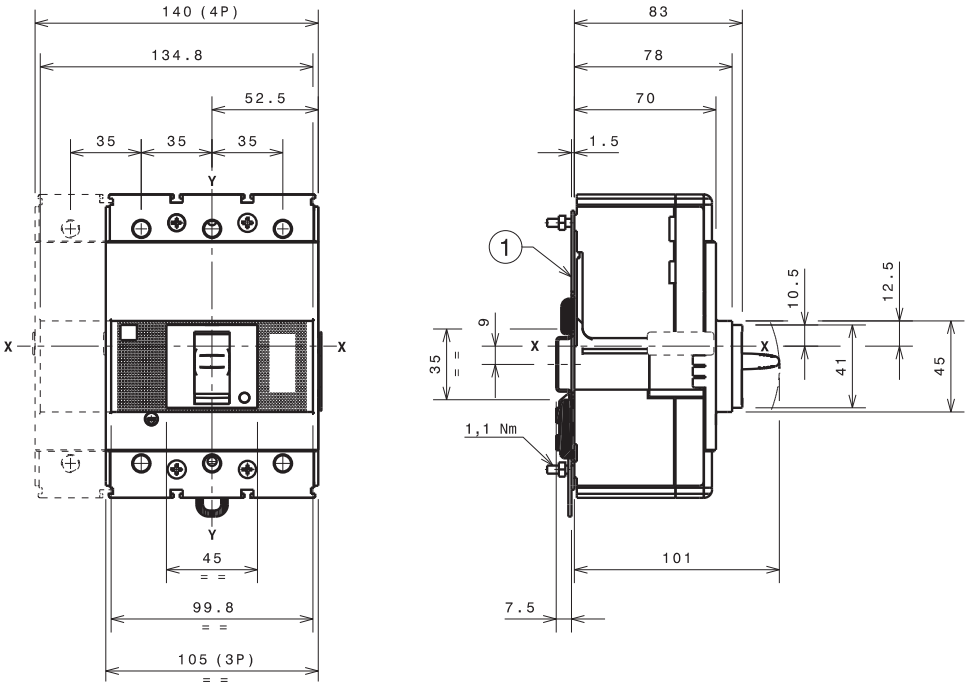

Overall dimensions

Tmax XT3 - Installation for fixed circuit-breaker

Drilling template for circuit-breaker fixing

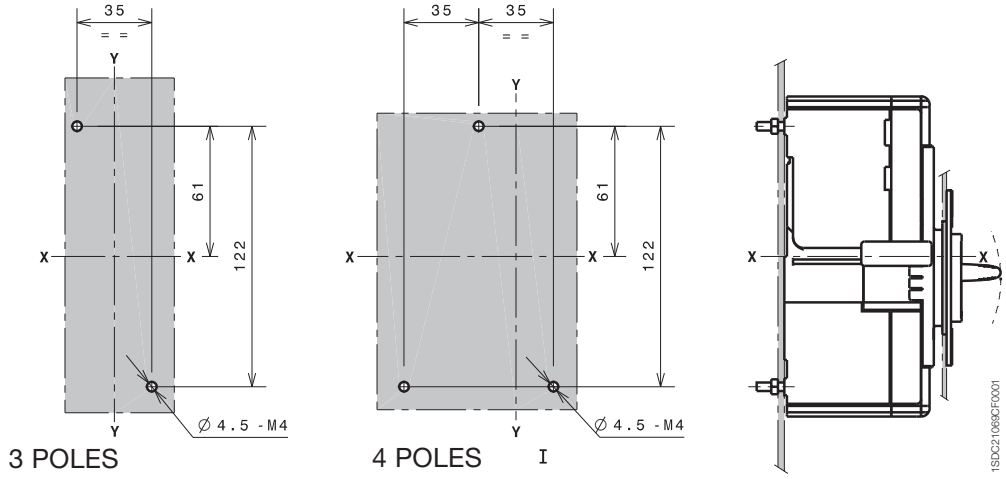

Flanges

Caption

1. Flange for fixed circuit-breaker III
2. Flange for fixed circuit-breaker IV
3. Flange for circuit-breaker with direct motor operator MOD
4. Flange for circuit-breaker with direct rotary handle (RHD)
5. Flange for circuit-breaker III with residual current
6. Flange for circuit-breaker IV with residual current
7. Optional flange

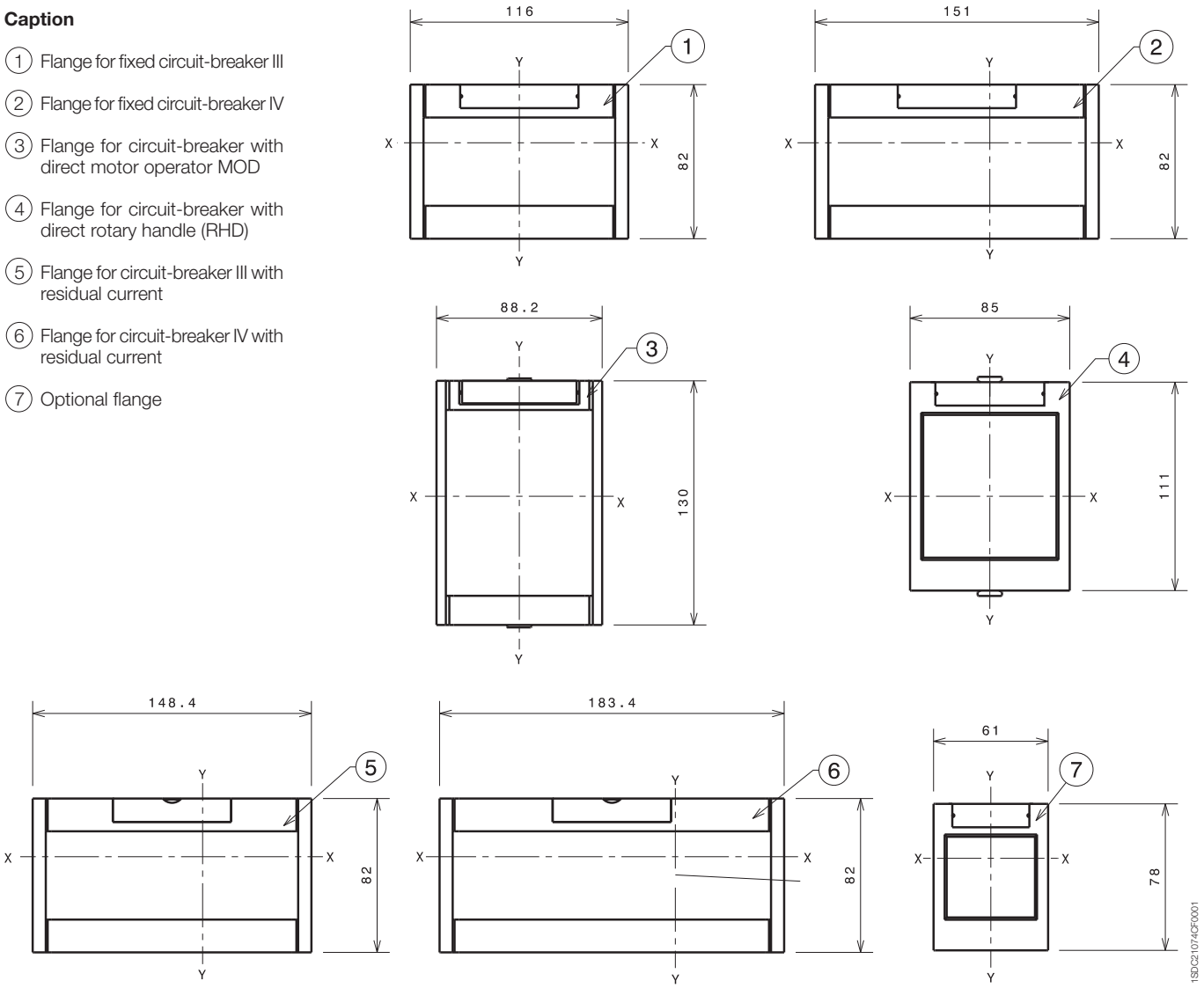

Drilling templates compartment door

With standard flange

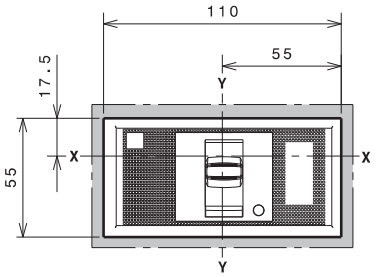

A=74
3 POLES

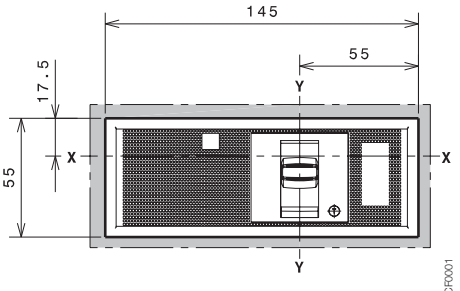

A=74
4 POLES

1SDC21071CF0001

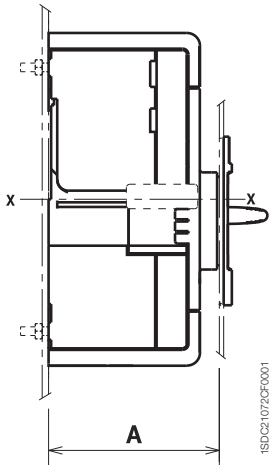

1SDC21072CF0001

Without flange

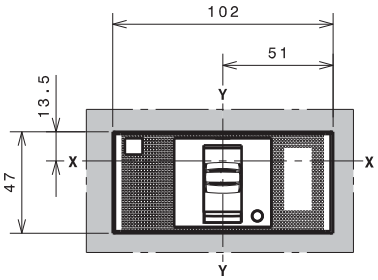

A=71
3 POLES

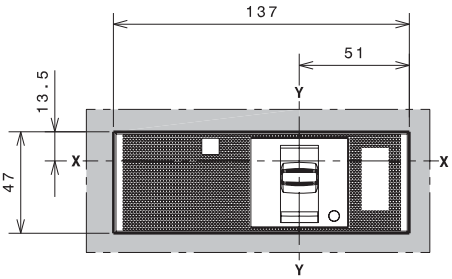

A=71
4 POLES

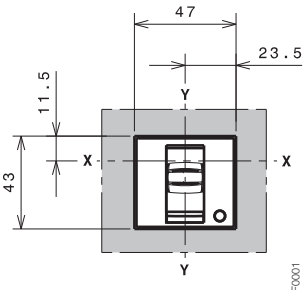

A=79
3-4 POLES

1SDC21073CF0001

With optional flange

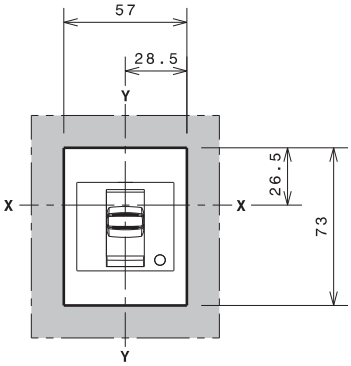

A=79
3-4 POLES

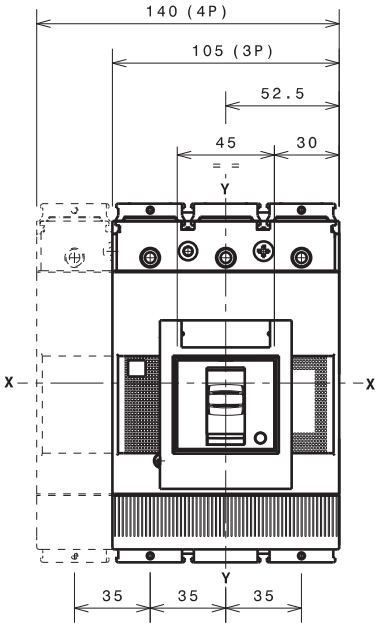

1SDC21023DF0001

Overall dimensions

Tmax XT3 - Terminals for fixed circuit-breaker

Terminals F

Caption

(1) Front terminals for busbars connection

Note: 25mm insulating barriers between phases (compulsory) provided

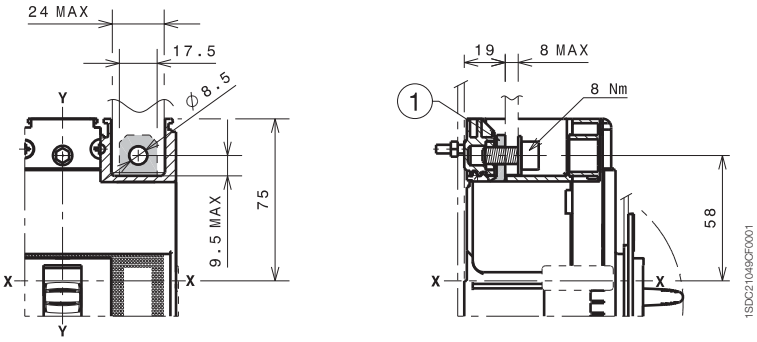

Terminals EF

Caption

(2) Front extended terminals

(3) Terminal covers with degree of protection IP40 (optional) not provided

(5) 100mm insulating barriers between phases (compulsory) provided

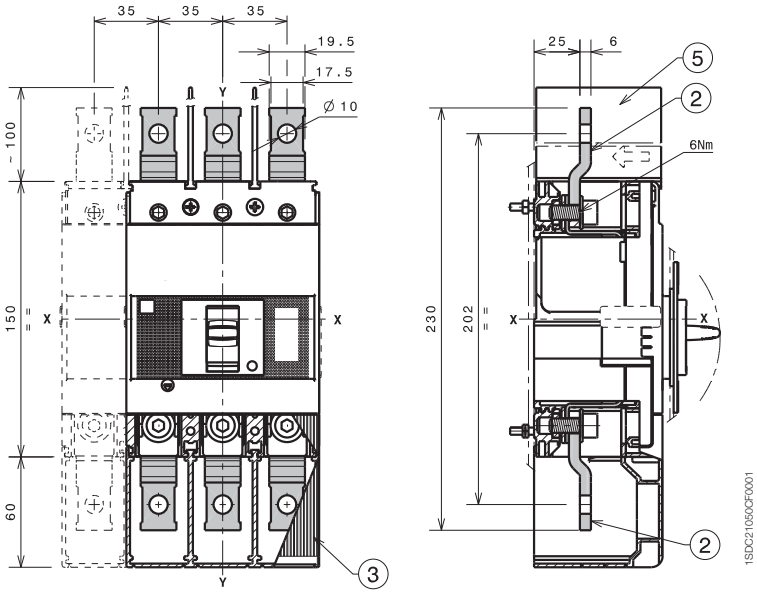

Terminals ES

Caption

(4) Front extended spread terminals for busbars connection

(6) 200mm insulating barriers between phases (compulsory) provided

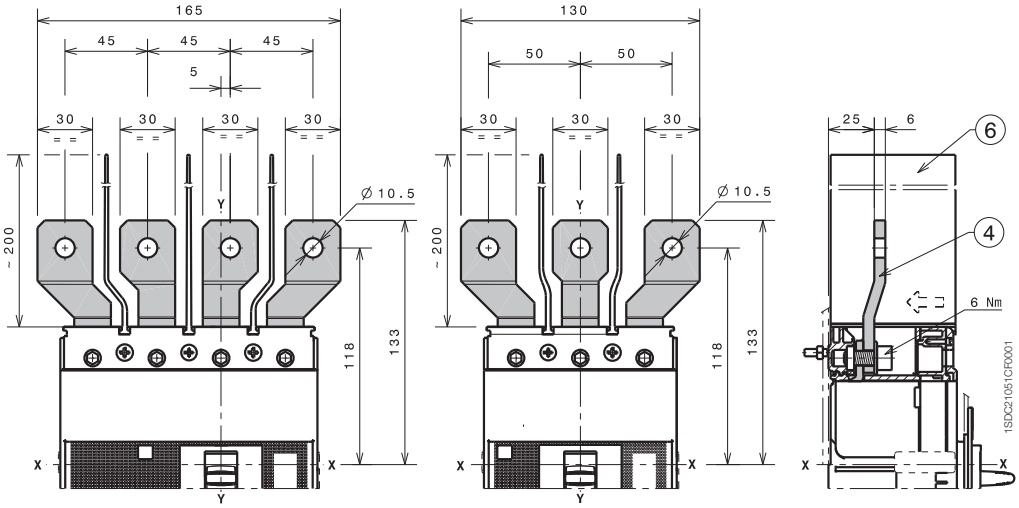

1x70...185mm² terminals FCCuAl

Caption

(1) 1x70...185mm² terminals FCCuAl

Note: 25mm insulating barriers between phases (compulsory) provided as standard with the circuit-breaker

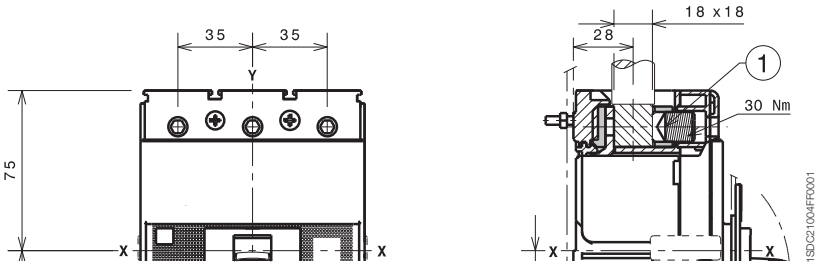

2x35...150mm² terminals FCCuAl

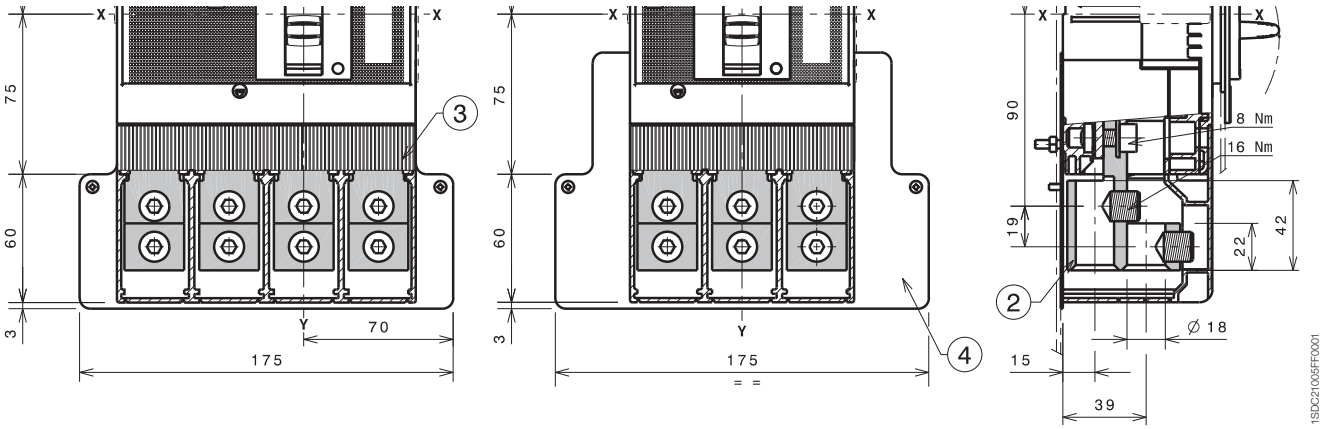

Caption

(2) 2x35...150mm² terminals FCCuAl

(3) Terminal covers with degree of protection IP40 (optional) provided

(4) Provided rear insulated plate (mandatory for CuAl 2x150mm² cables)

(7) Drilling template for circuit-breaker fixing on sheet III with rear insulated plate

(8) Drilling template for circuit-breaker fixing on sheet IV with rear insulated plate

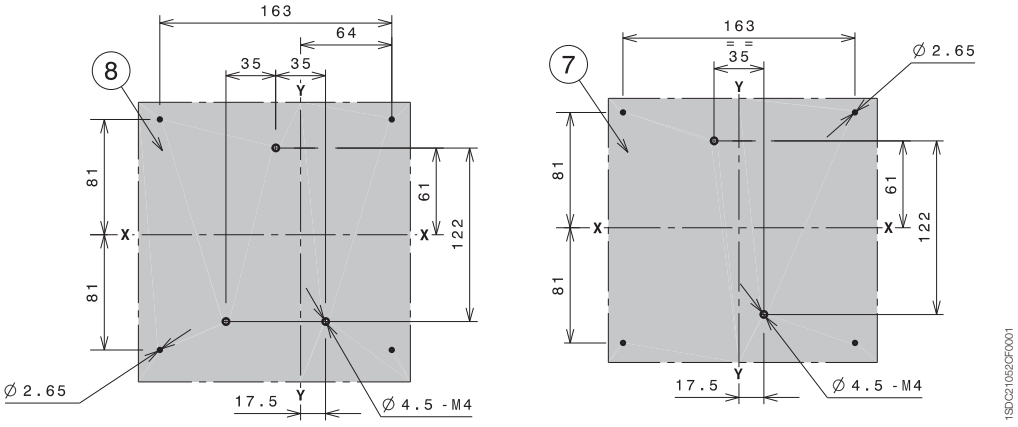

Overall dimensions

Tmax XT3 - Terminals for fixed circuit-breaker

Terminals FCCu

Caption

(6) Front terminals FCCu

Note: 25mm insulating barriers between phases (compulsory) provided as standard with the circuit-breaker

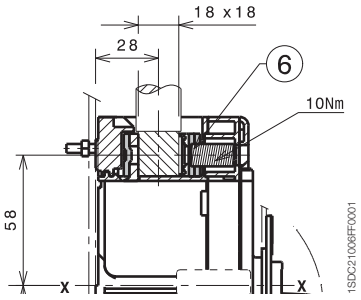

Terminals MC

Caption

(3) Terminal covers with degree of protection IP40 (optional) provided

(5) Front terminal for multicable connection

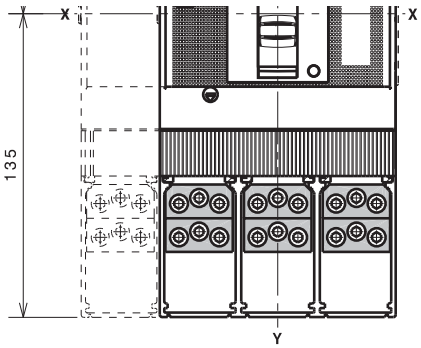

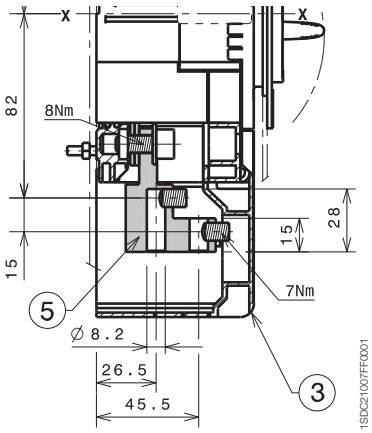

Terminals R

Caption

1. Adjustable rear terminals
2. Bottom terminal covers with degree of protection IP30 (optional) provided
3. Drilling tamplate for circuit-breaker IV fixing on sheet
4. Drilling tamplate for circuit-breaker III fixing on sheet

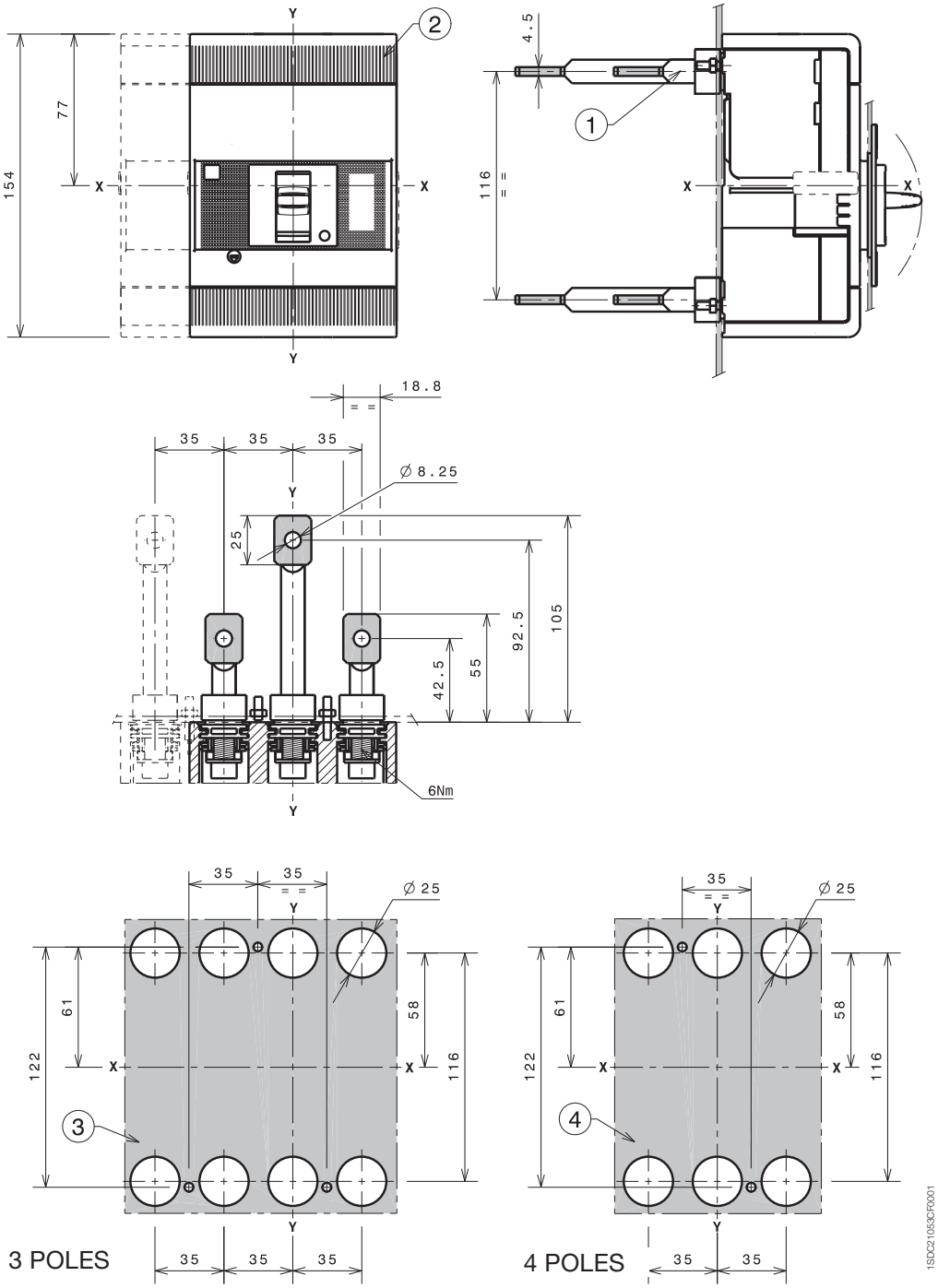

Rotary handle operating mechanism on circuit-breaker (RHD)

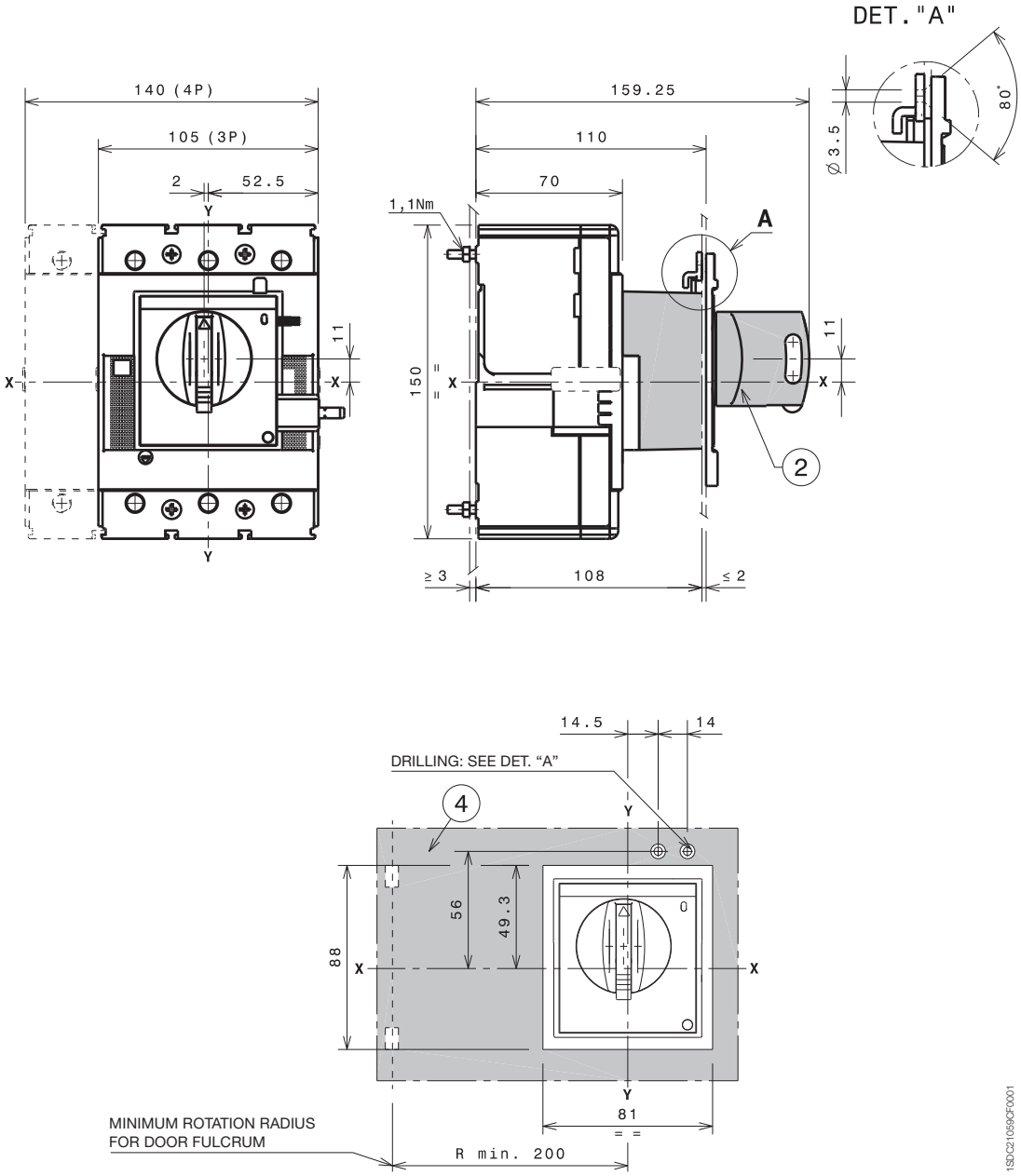

Caption

(2) Rotary handle operating mechanism on circuit-breaker RHD

(4) Drilling template of door with direct rotary handle

Rotary handle operating mechanism on the compartment door (RHE)

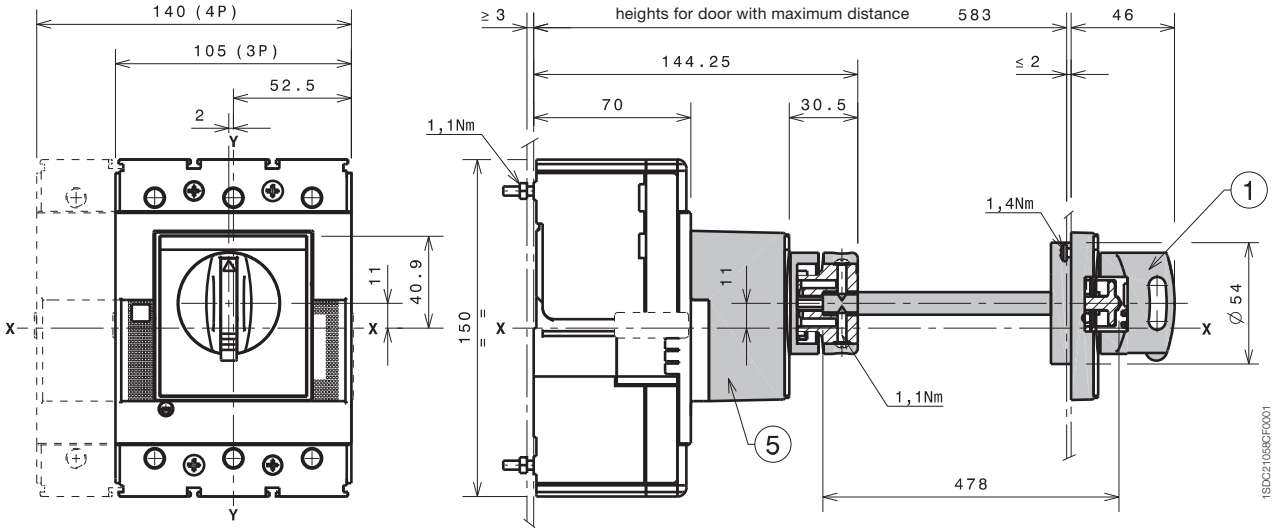

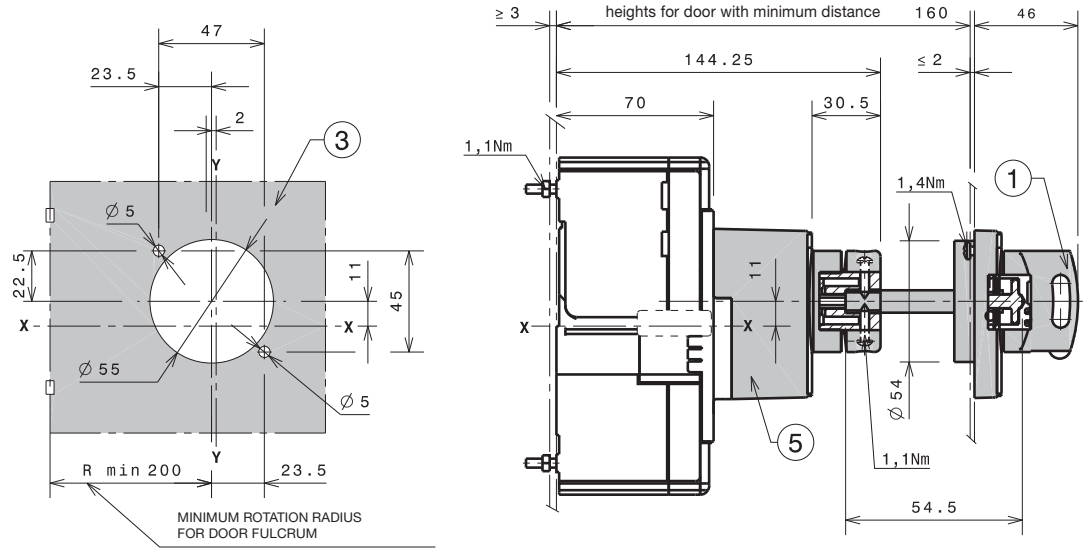

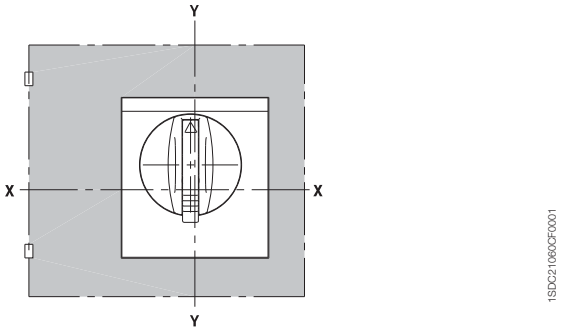

Caption

(1) Rotary handle operating mechanism on the compartment door (RHE)

(3) Drilling template of door with transmetted rotary handle (RHE)

(5) Transmission unit

Overall dimensions

Tmax XT3 - Accessories for fixed circuit-breaker

Direct motor operator (MOD)

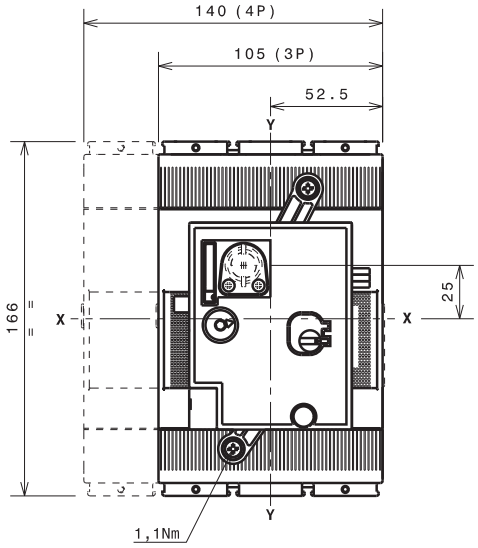

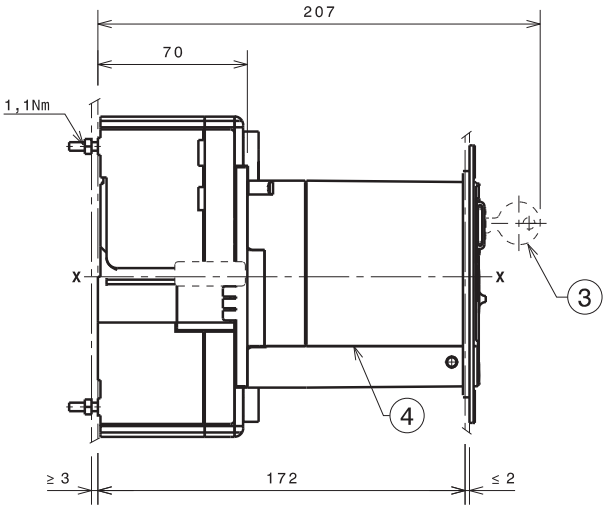

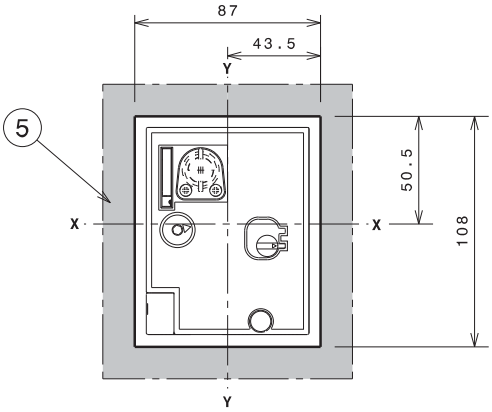

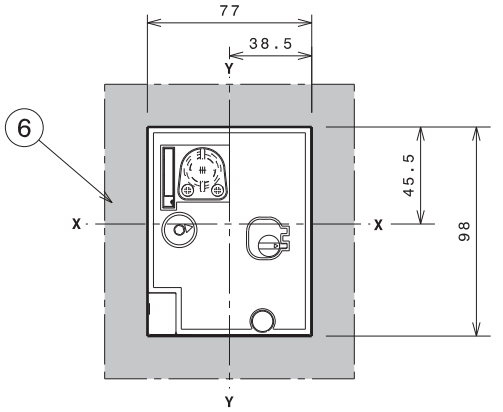

Caption

(3) Key lock (on request)

(4) Direct motor operator MOD

(5) Drilling template of door with direct rotary handle with flange

(6) Drilling template of door with direct rotary handle without flange

RC Inst and RC Sel residual current release for 3 poles circuit-breaker

Caption

1. Front terminals for cables connection
2. Terminal covers with degree of protection IP40
3. Drilling template of door with direct rotary handle with flange
4. Drilling template of door with direct rotary handle without flange
5. Drilling template for circuit-breaker fixing on sheet

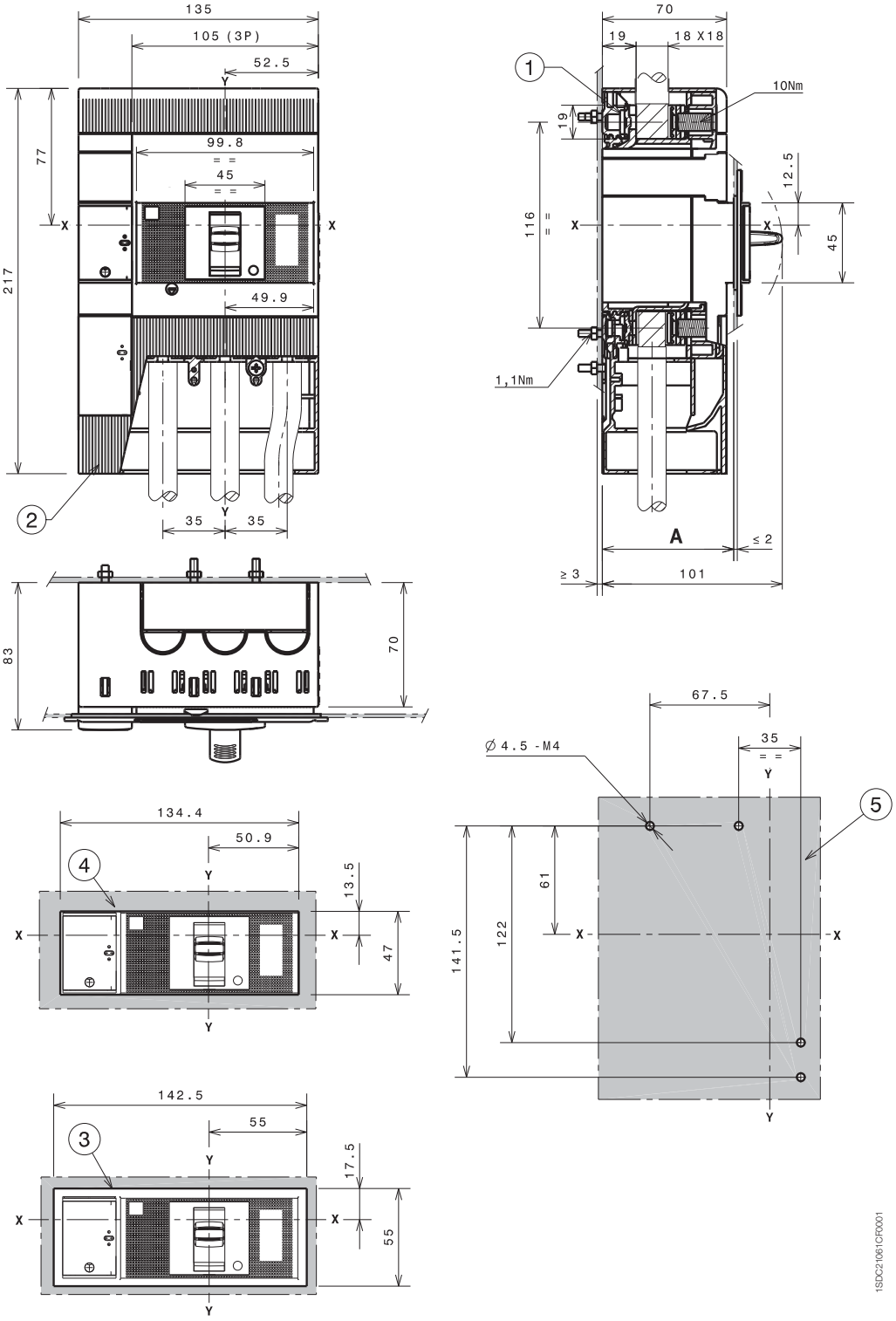

		A
With standard flange	III	74
Without flange	III	71

RC Inst and RC Sel residual current release for 4 poles circuit-breaker

Caption

1. Front terminals for cables connection
2. Terminal covers with degree of protection IP40
3. Drilling template of door with direct rotary handle with flange
4. Drilling template of door with direct rotary handle without flange
5. Drilling template for circuit-breaker fixing on sheet

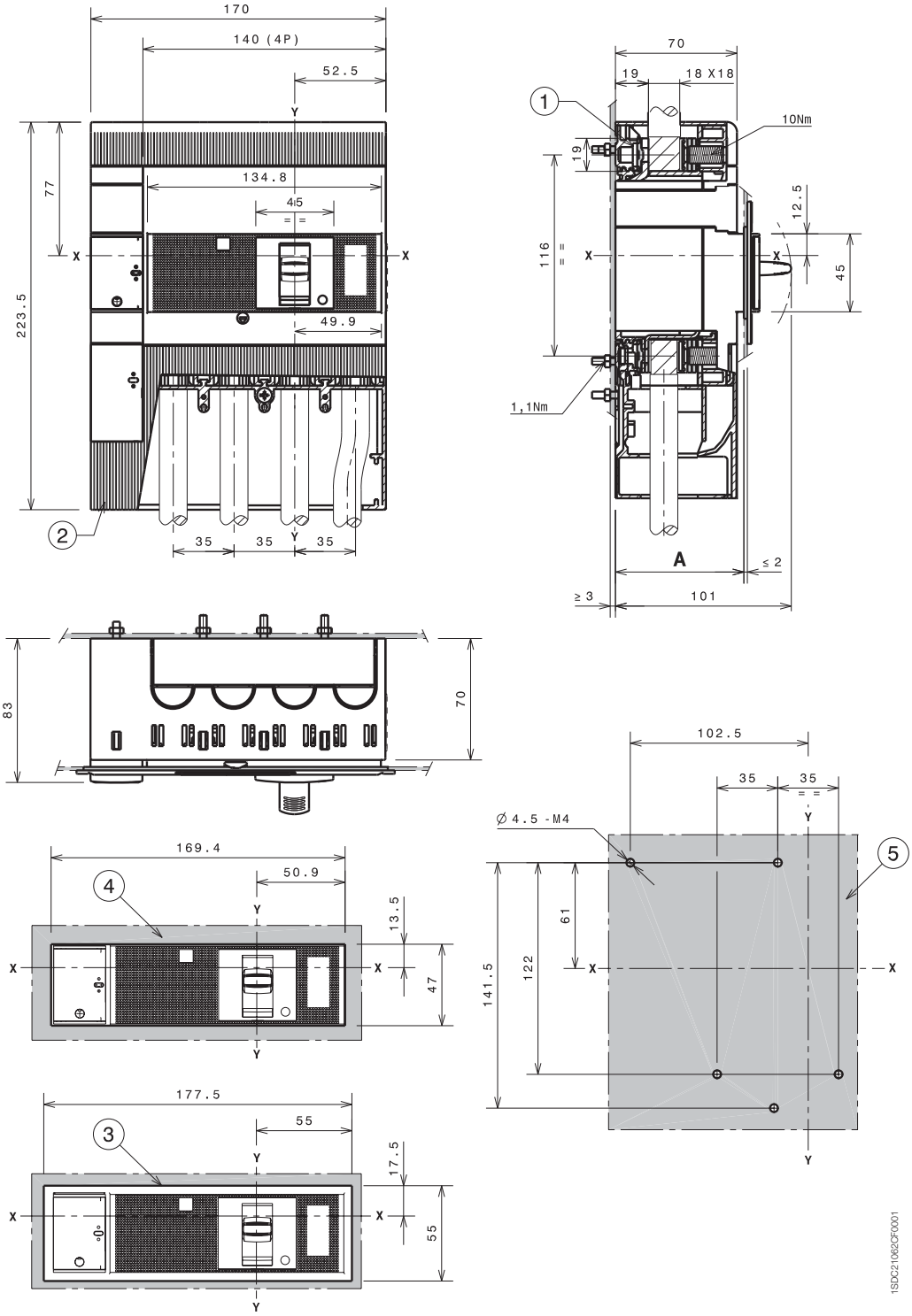

		A
With standard flange	IV	74
Without flange	IV	71

Overall dimensions

Tmax XT3 - Installation for plug-in circuit-breaker

Fixing on support sheet

Caption

1. Fixed part
2. Moving part

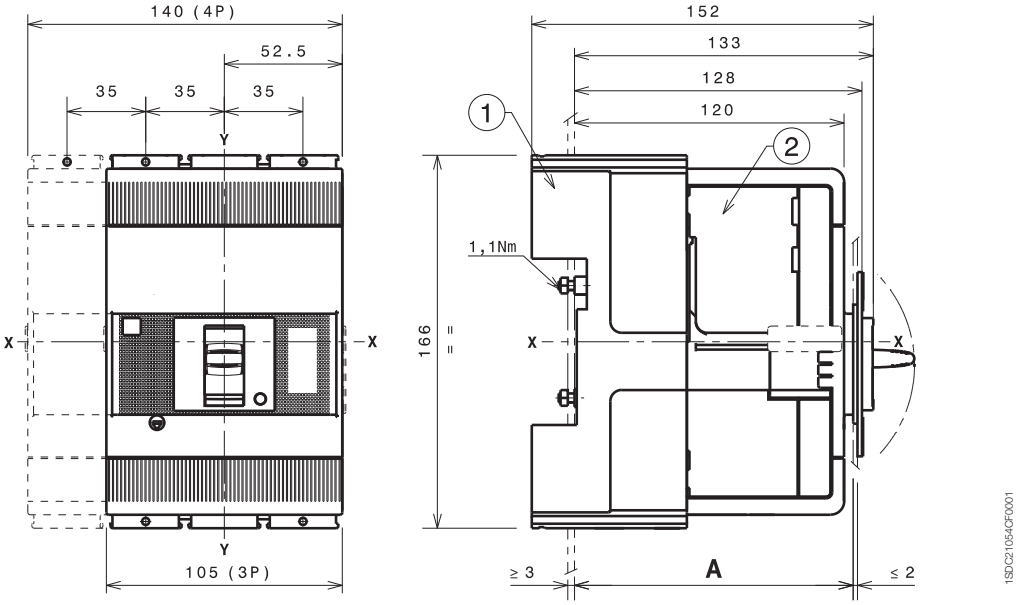

Fixing at 50mm		A
With standard flange	III - IV	124
Without flange	III - IV	121
	III - IV	129

Fixing at 70mm for extended front terminals		A
With standard flange	III - IV	144
Without flange	III - IV	141
	III - IV	149

Overall dimensions

Tmax XT3 - Installation for plug-in circuit-breaker

Drilling templates for support sheet

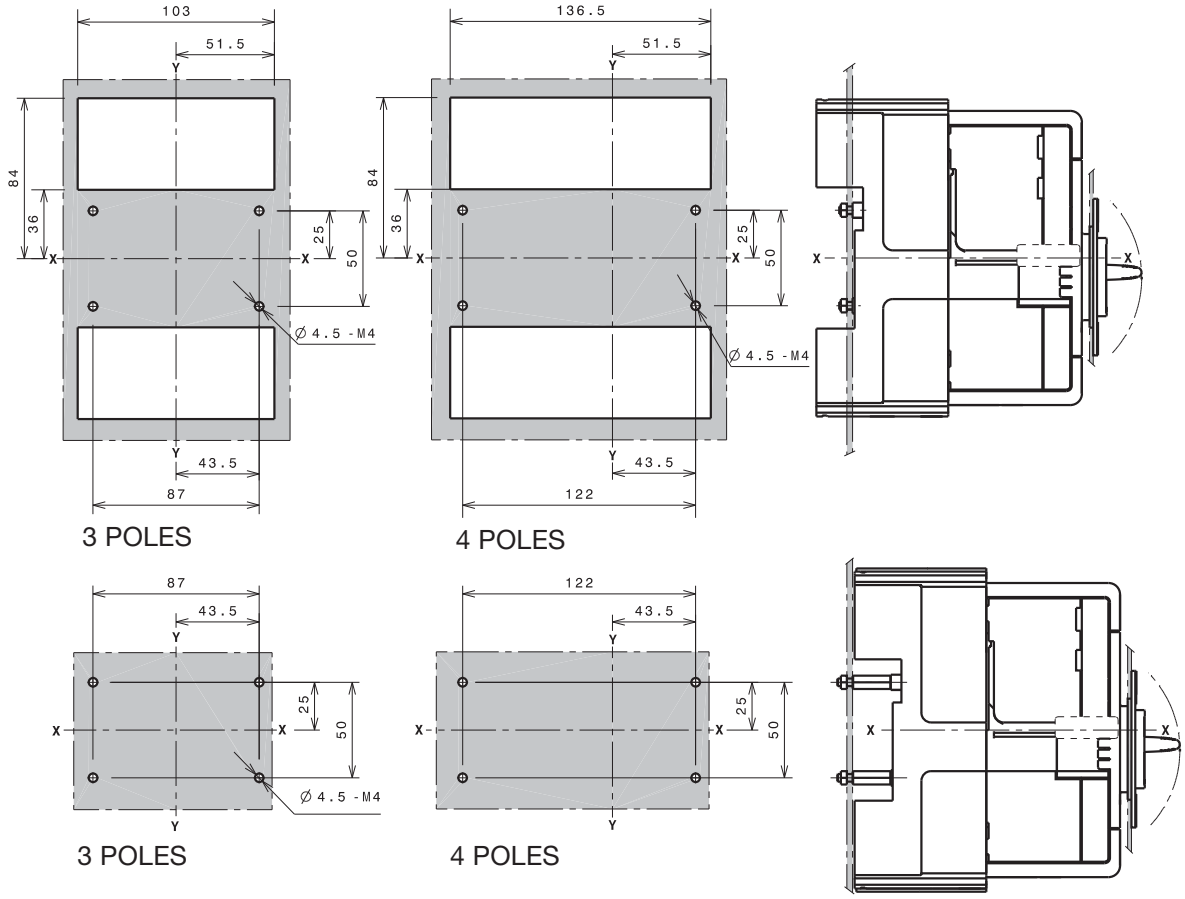

Flanges

Caption

1. Flange for plug-in circuit-breaker III
2. Flange for plug-in circuit-breaker IV
3. Flange for plug-in circuit-breaker with direct motor operator MOD
7. Optional flange

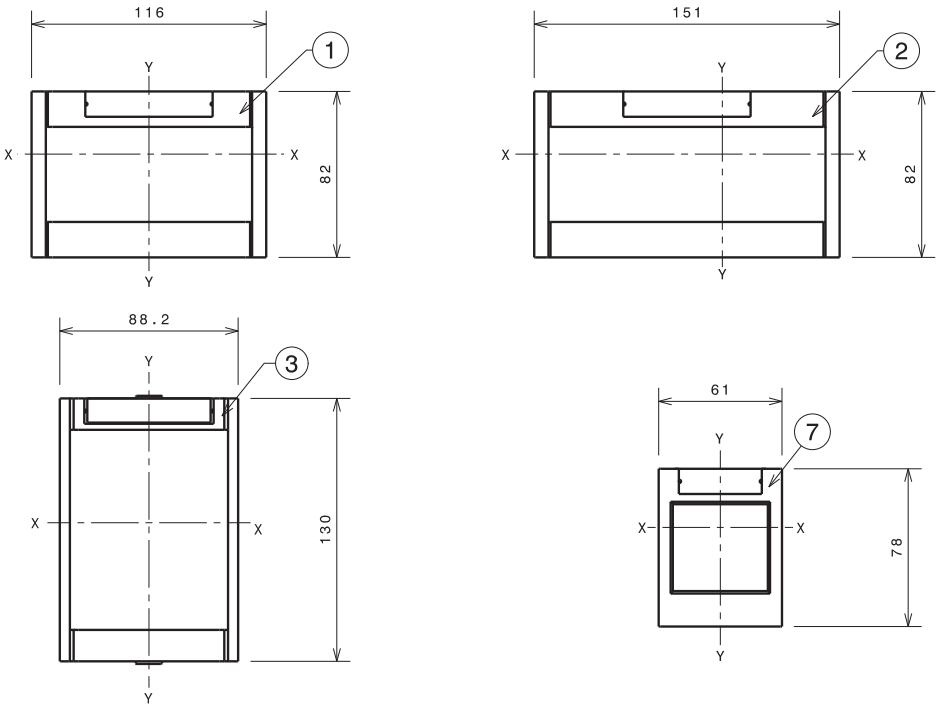

Drilling templates compartment door

With standard flange

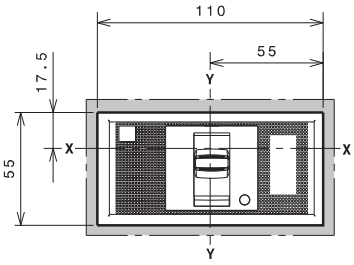

B=124 C=144
3 POLES

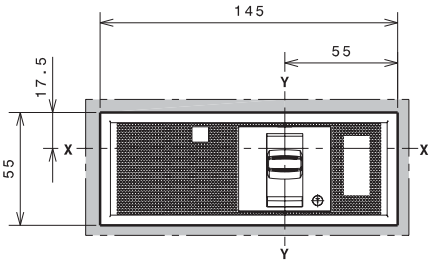

B=124 C=144
4 POLES

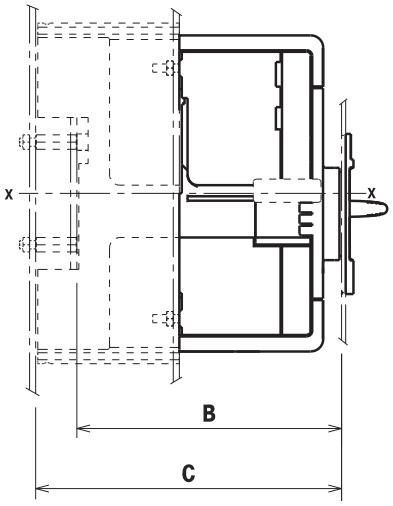

Without flange

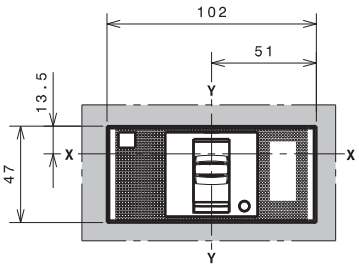

B=121 C=141
3 POLES

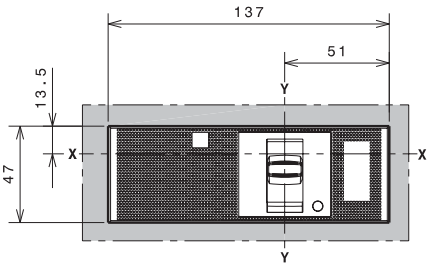

B=121 C=141
4 POLES

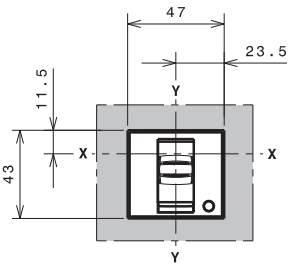

B=129 C=149
3-4 POLES

With optional flange

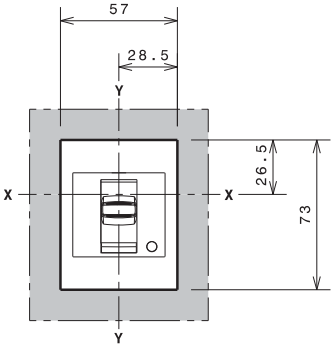

B=129 C=149
3-4 POLES

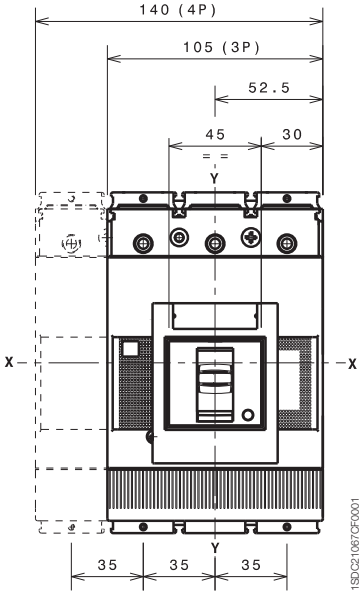

Overall dimensions

Tmax XT3 - Terminals for plug-in circuit-breaker

Terminals EF

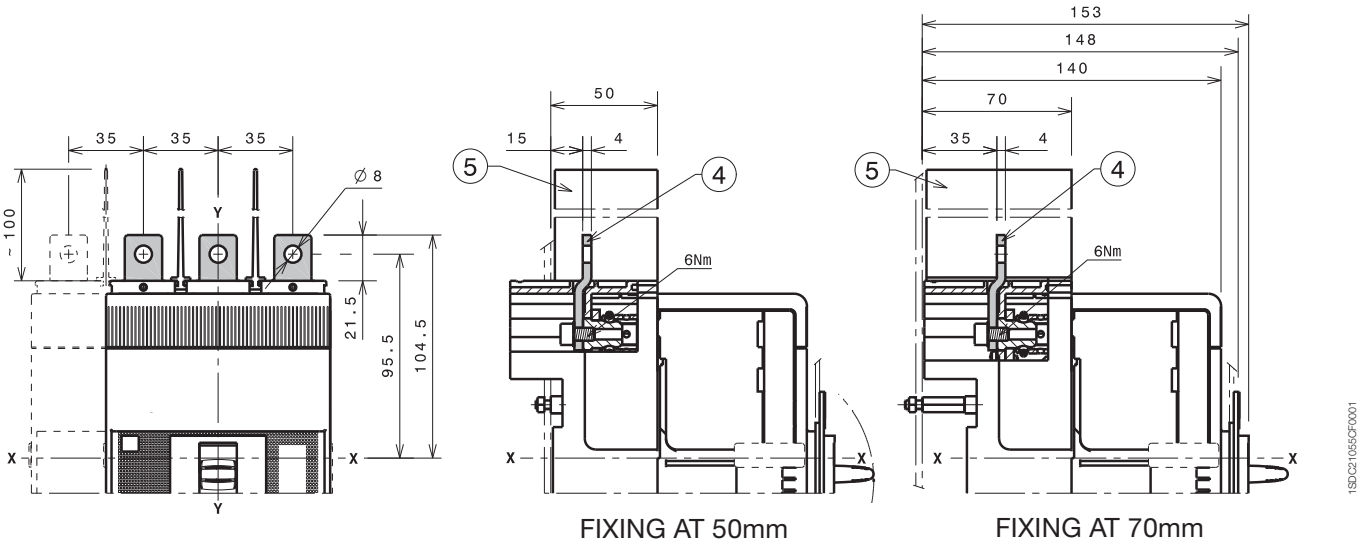

FIXING AT 50mm

FIXING AT 70mm

Caption

(4) Front extended terminals

(5) 100mm insulating barriers between phases (compulsory) provided

Terminals ES

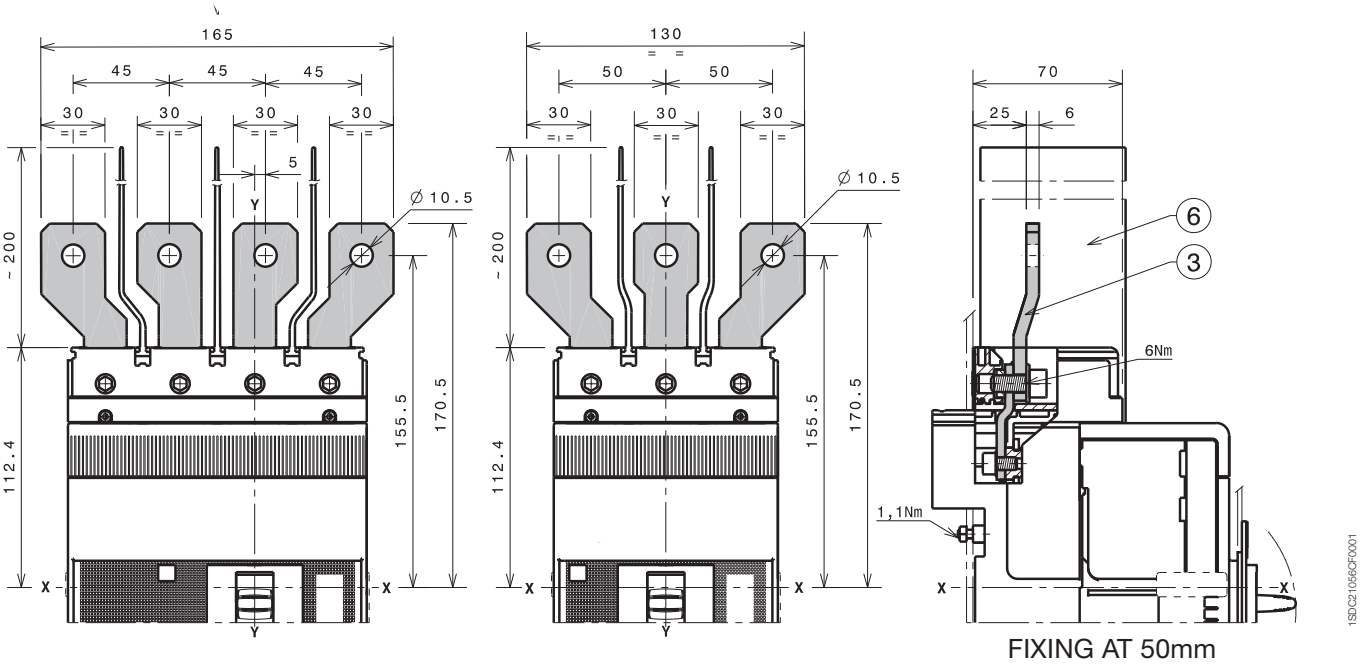

FIXING AT 50mm

Caption

(3) Front extended spread terminals for busbars connection

(6) 200mm insulating barriers between phases (compulsory) provided

1x70...185mm² terminals FCCuAl

Caption

(1) 1x70...185mm² front terminal FCCuAl

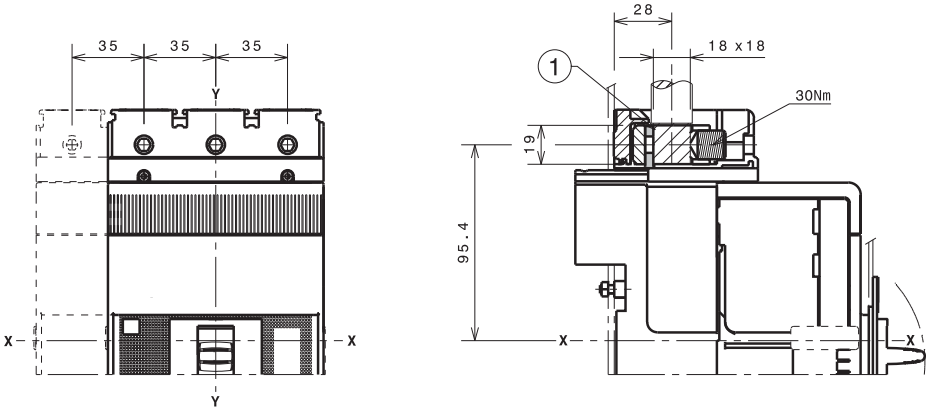

2x35...150mm² terminals FCCuAl

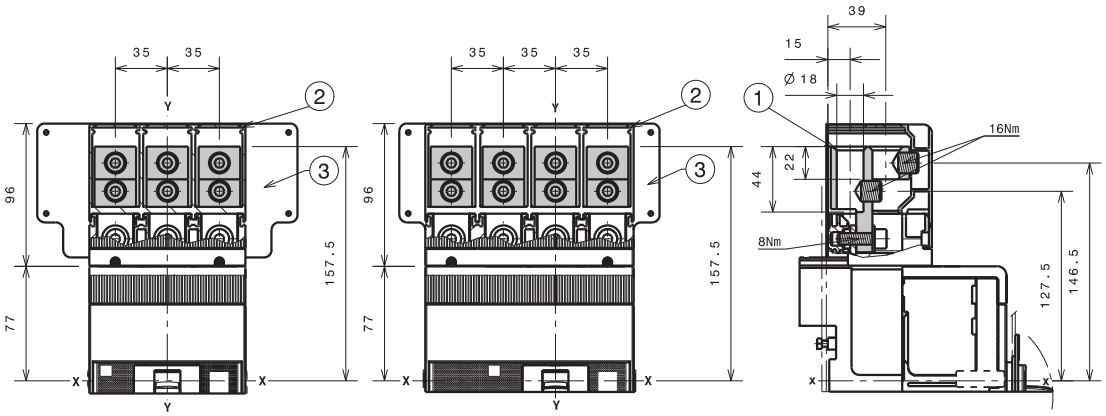

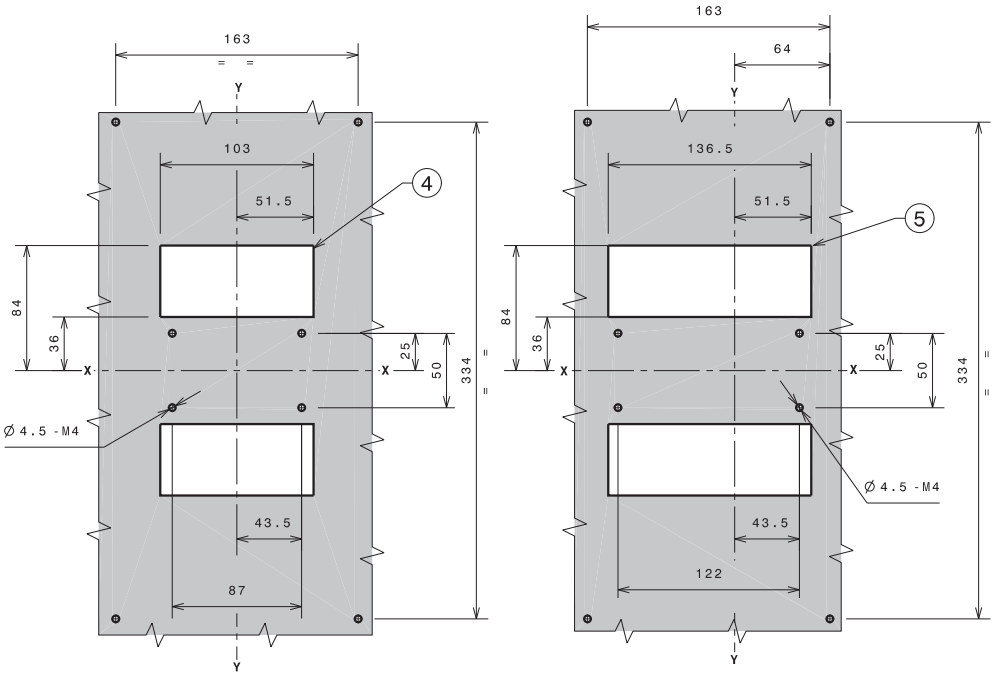

Caption

(1) 1x35...95 mm² external terminal FCCuAl

(2) High terminal covers with degree of protection IP40

(3) Rear insulated plate (compulsory with 2x150mm²)

(4) Drilling template for fixing circuit-breaker III with rear insulated plate

(5) Drilling template for fixing circuit-breaker IV with rear insulated plate

Overall dimensions

Tmax XT3 - Terminals for plug-in circuit-breaker

Terminals FCCu

Caption

(4) Front terminals FCCu

Note: 25mm insulating barriers between phases (compulsory) provided as standard with the circuit-breaker

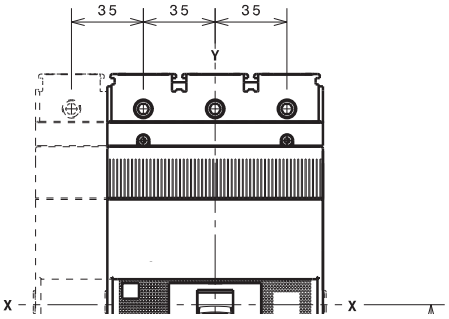

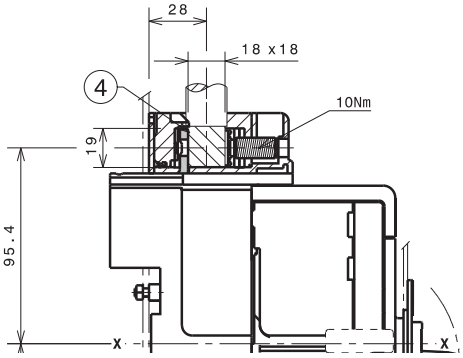

Terminals MC

Caption

(2) High terminal covers with degree of protection IP40 (compulsory with multicable)

(3) Front terminal for multicable connection

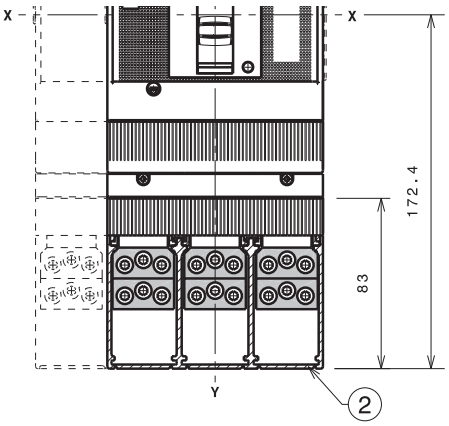

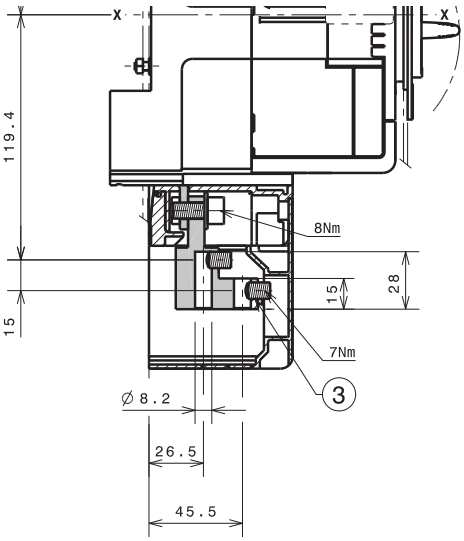

Terminals HR/VR

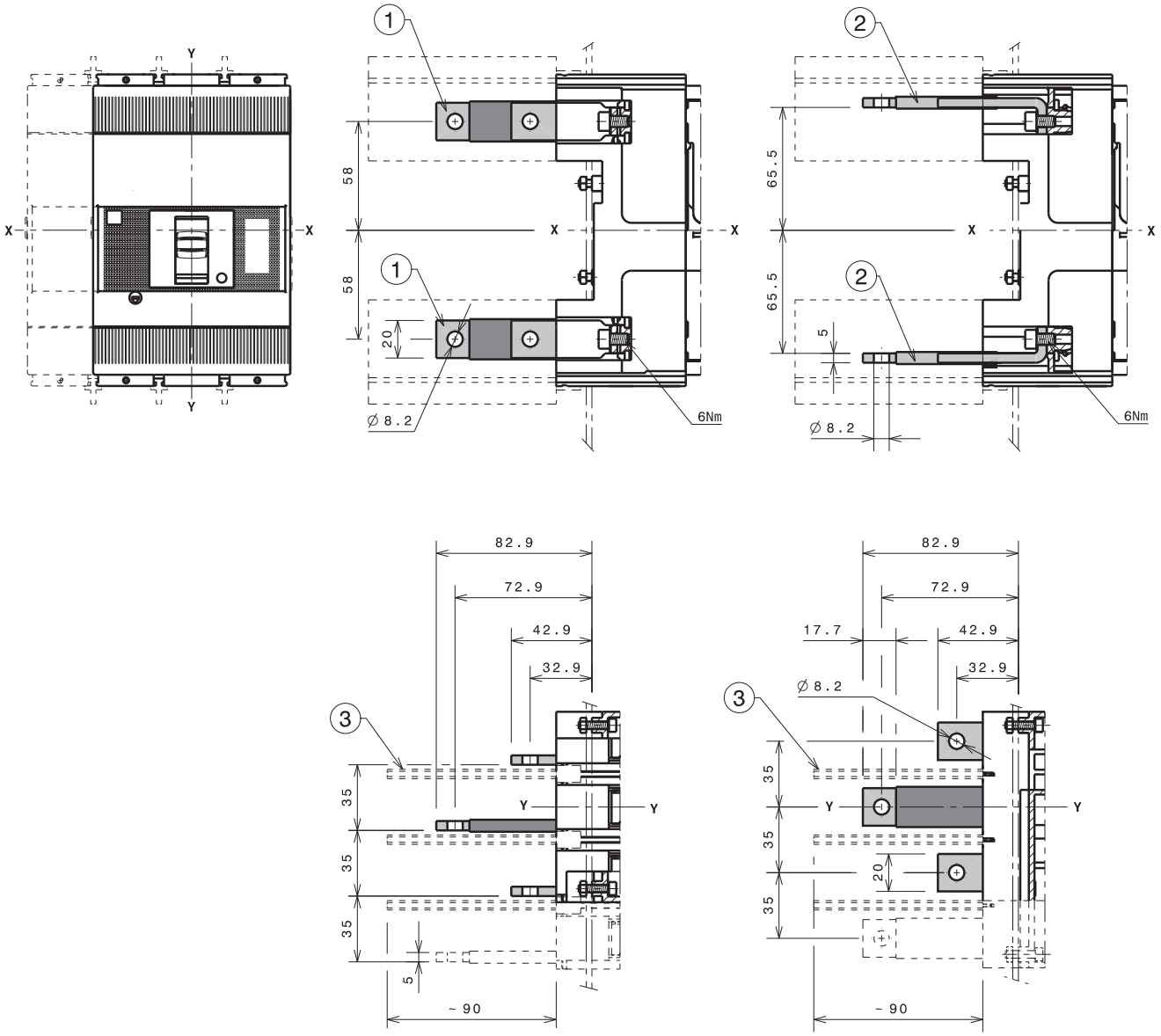

FIXING AT 50mm

FIXING AT 50mm

Caption

1. Rear vertical terminals
2. Rear horizontal terminals
3. 90mm insulating barriers between phases (compulsory) not provided

Overall dimensions

Tmax XT3 - Accessories for plug-in circuit-breaker

Direct motor operator (MOD)

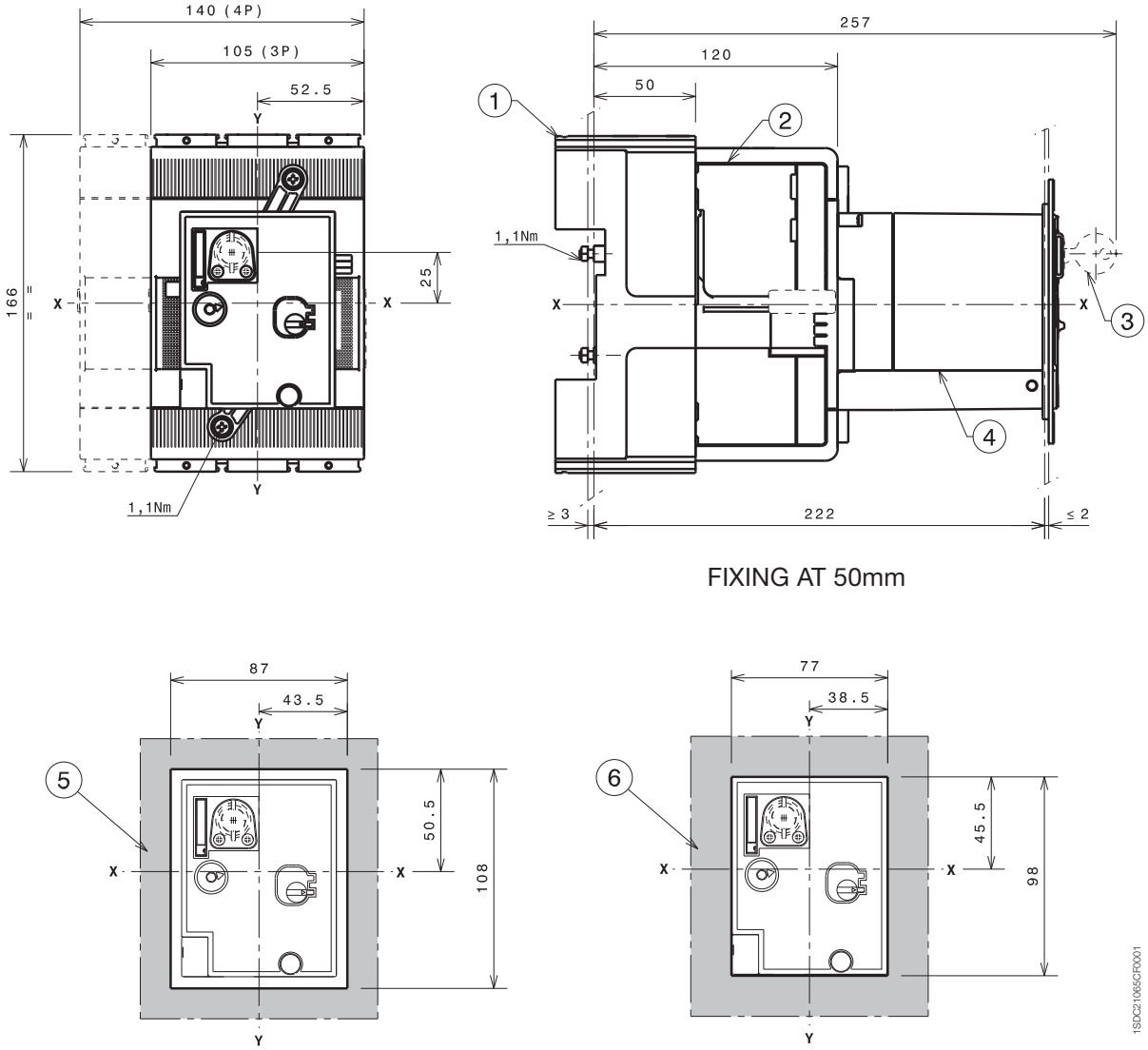

Caption

1. Fixed part
2. Moving part
3. Key lock (on request)
4. Direct motor opetrator MOD
5. Drilling template of door with direct rotary handle with flange
6. Drilling template of door with direct rotary handle without flange

Overall dimensions

Tmax XT4 - Installation for fixed circuit-breaker

Fixing on sheet

Caption

(2) Overall dimension of optional wiring ducts

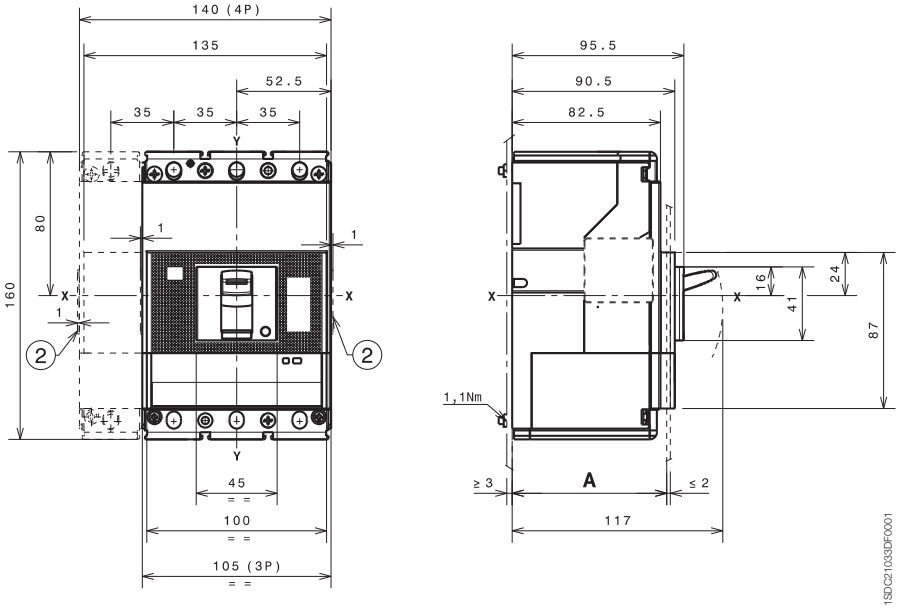

		A
With standard flange	III - IV	86
Without flange	III - IV	83.5
	III - IV	91.5

Fixing on DIN 50022 rail

Caption

(1) Bracket for fixing

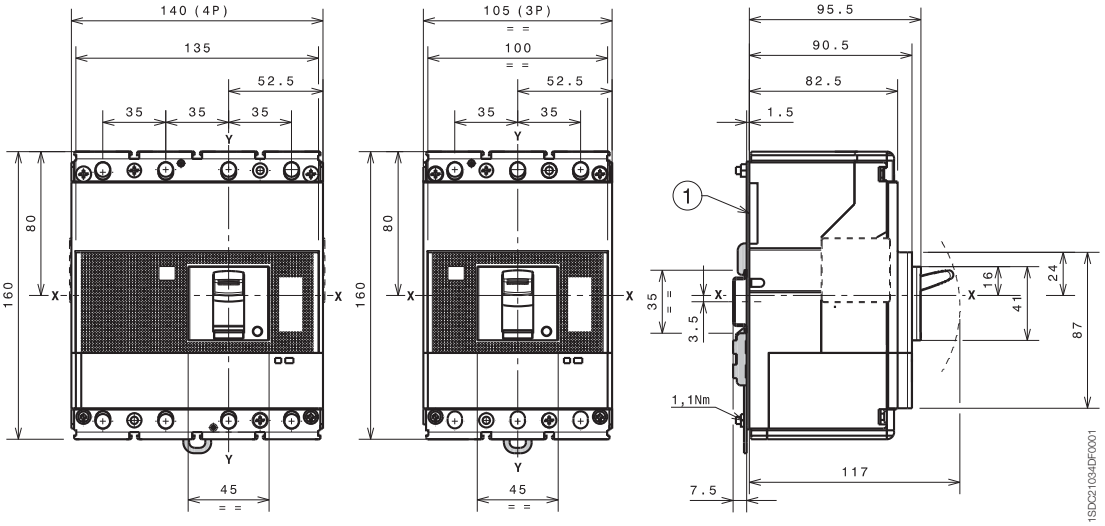

Drilling templates for support sheet

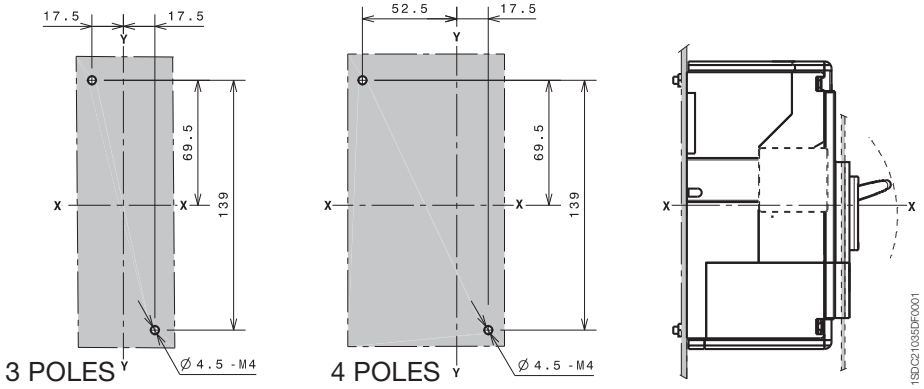

Overall dimensions

Tmax XT4 - Installation for fixed circuit-breaker

Flanges

Caption

1. Flange for fixed circuit-breaker III
2. Flange for fixed circuit-breaker IV
3. Flange for fixed circuit-breaker III-IV with MOE and FLD
4. Flange for circuit-breaker III-IV with direct rotary handle RHD
7. Flange for fixed circuit-breaker IV with front extended terminals and residual current
8. Optional flange

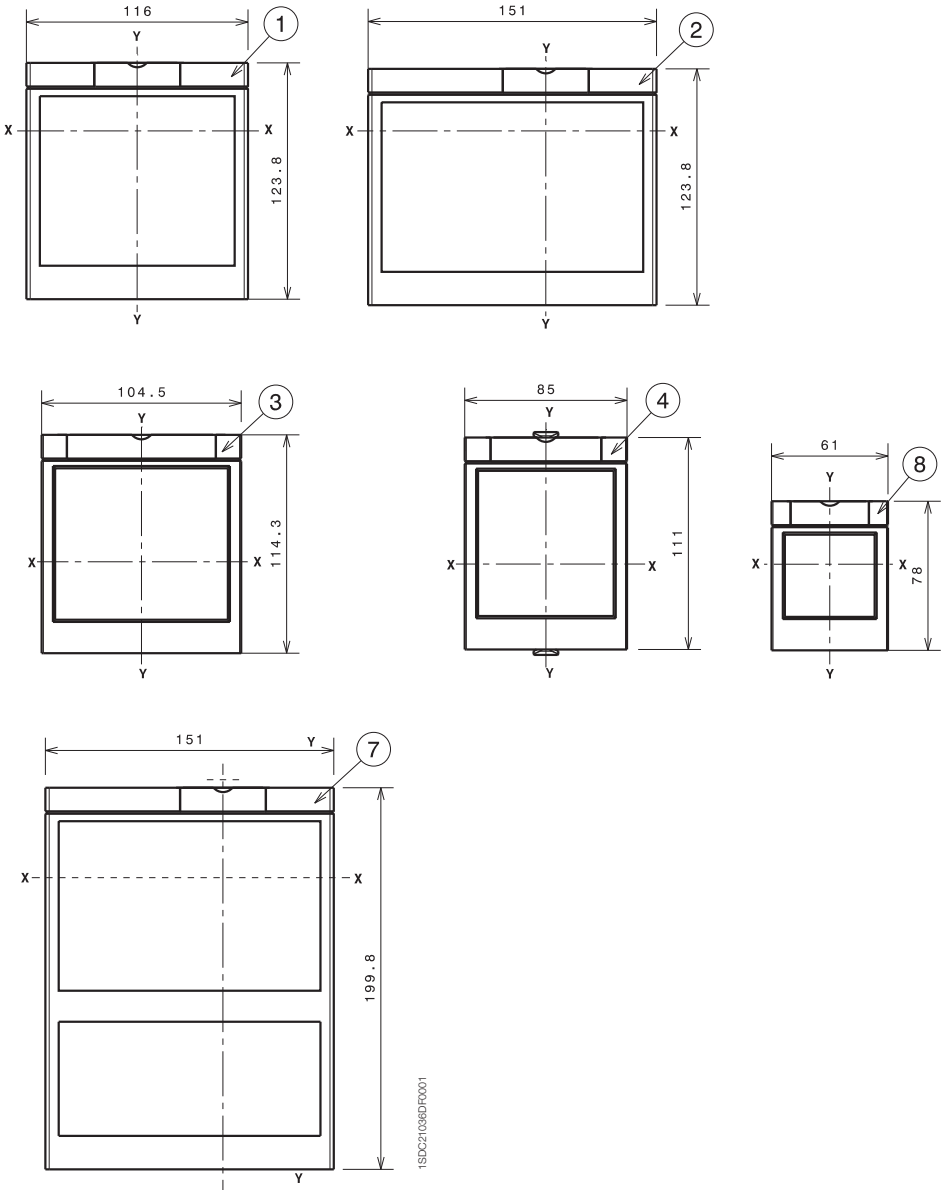

Drilling templates compartment door

With standard flange

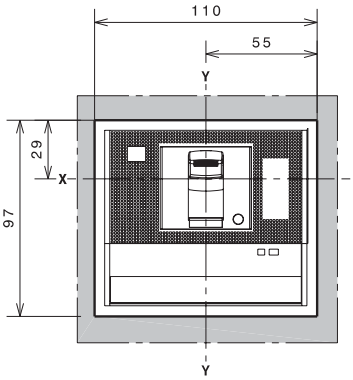

A=86
3 POLES

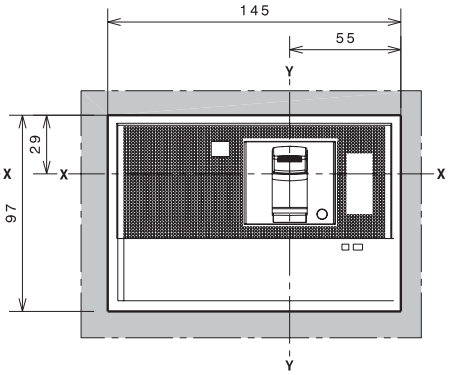

A=86
4 POLES

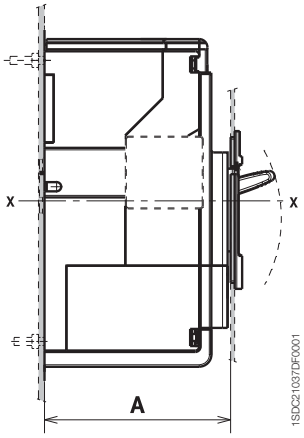

Without flange

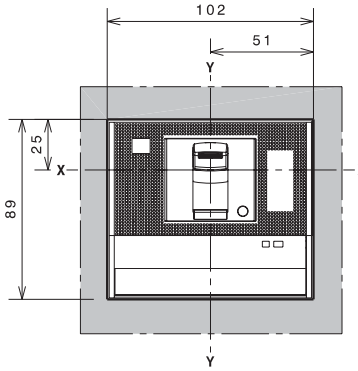

A=83.5
3 POLES

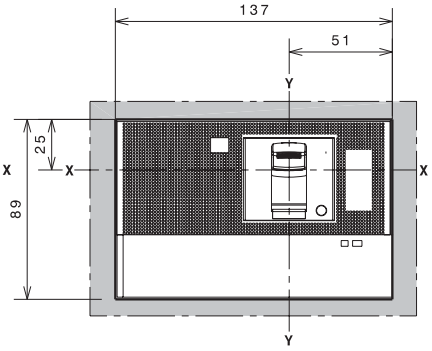

A=83.5
4 POLES

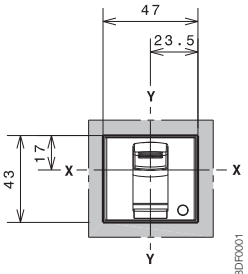

A=91.5
3-4 POLES

With optional flange

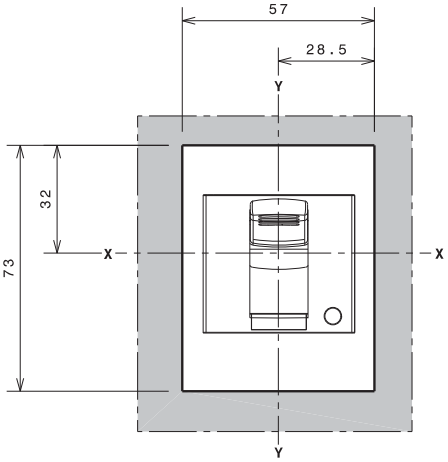

A=92
3-4 POLES

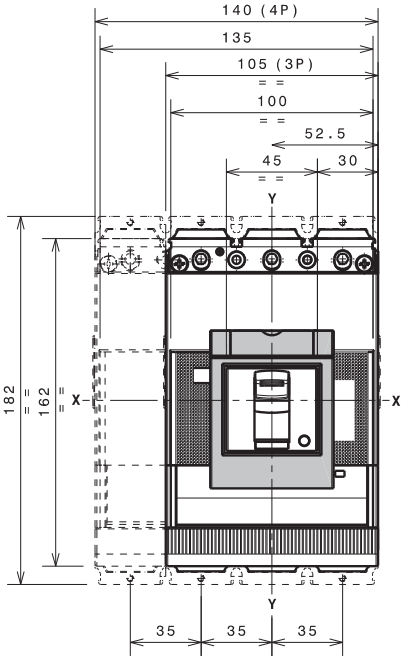

Overall dimensions

Tmax XT4 - Terminals for fixed circuit-breaker

Terminals F

Caption

1. 100mm insulating barriers between phases (compulsory) not provided
2. Bottom terminal covers with degree of protection IP30 (optional) not provided
3. Front terminals for connection busbar

Note: 25mm insulating barriers between phases (compulsory) provided

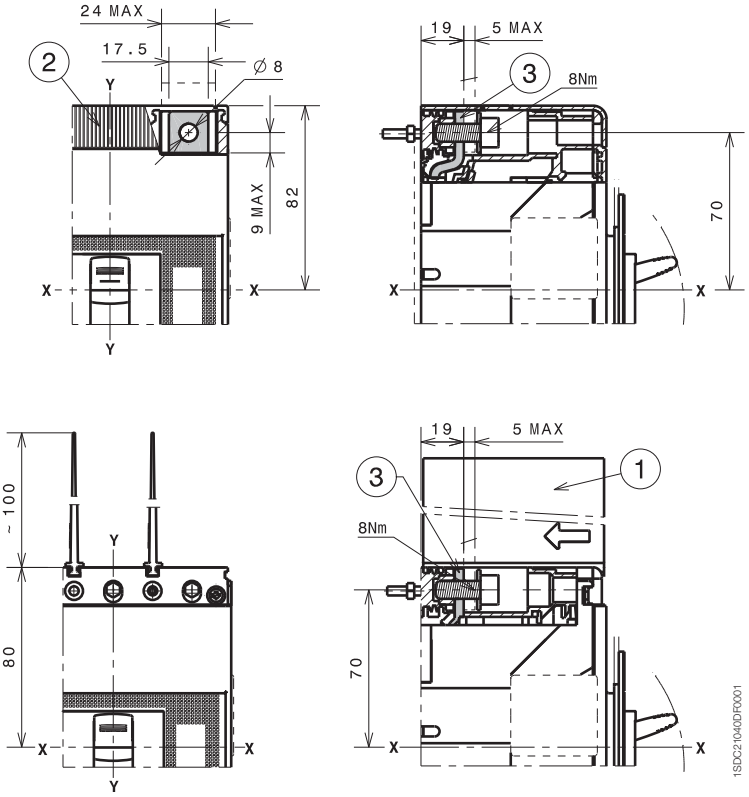

Terminals EF

Caption

4. Front extended terminals
5. Terminal covers with degree of protection IP40 (optional) not provided
8. 100mm insulating barriers between phases (compulsory) provided

Note: insulated plate (compulsory) provided

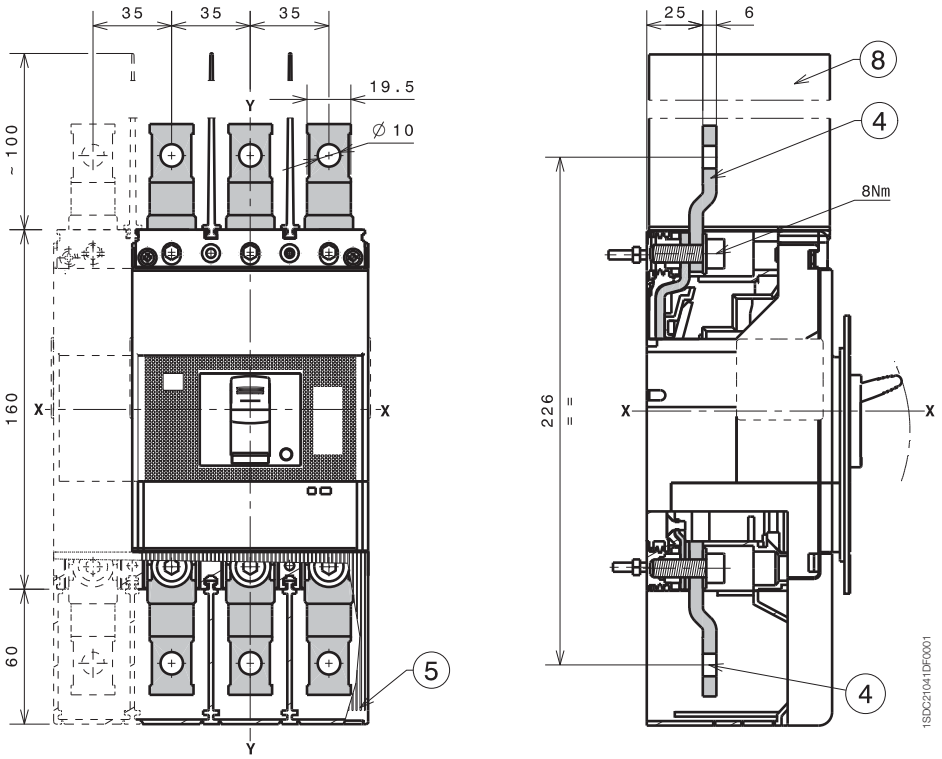

Terminals ES

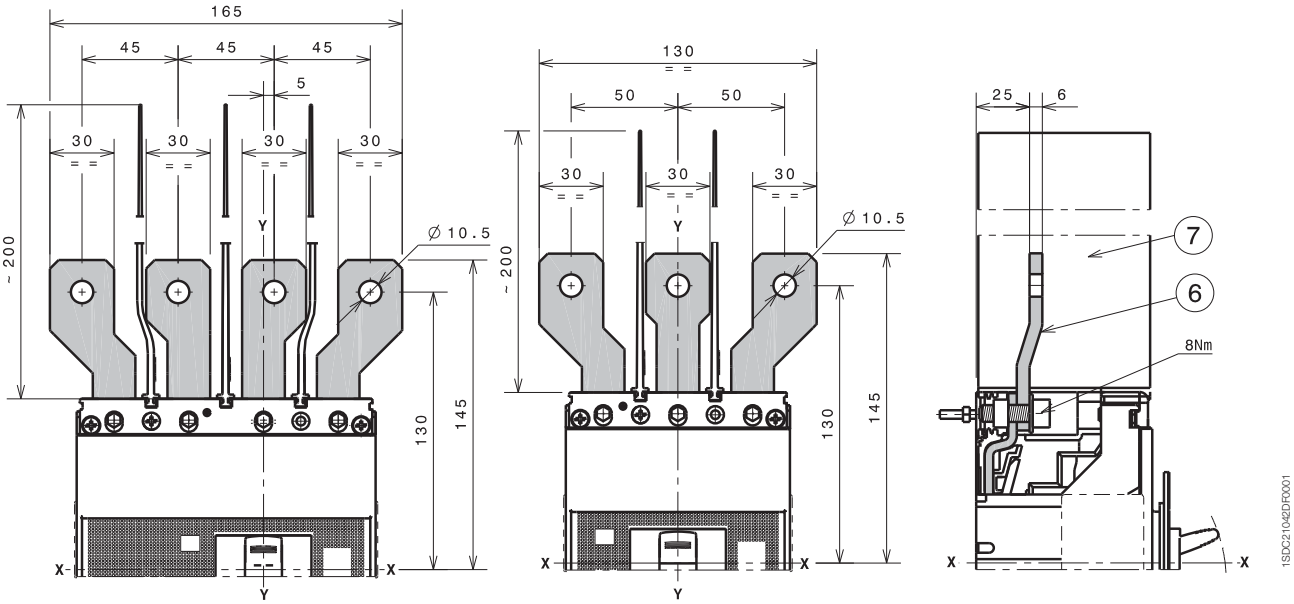

Caption

(6) Front extended spread terminals

(7) 200mm insulating barriers between phases (compulsory) provided

Note: insulated plate (compulsory) provided

1x1...185mm² terminals FCCuAl

Caption

(1) 1x1...185mm² terminals FCCuAl

(3) 25mm insulating barriers between phases (compulsory) provided

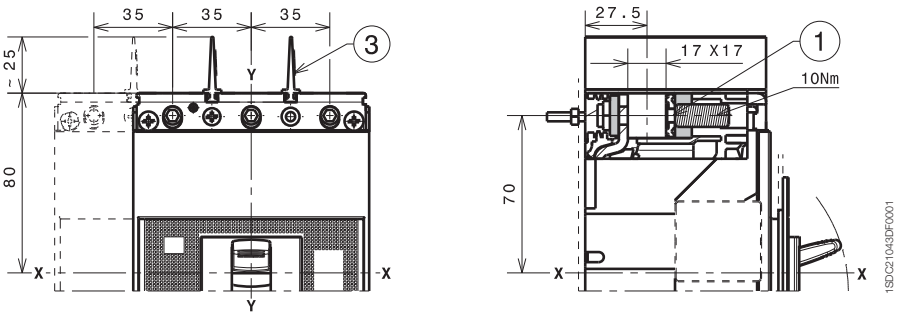

Overall dimensions

Tmax XT4 - Terminals for fixed circuit-breaker

2x35...150mm² terminals FCCuAl

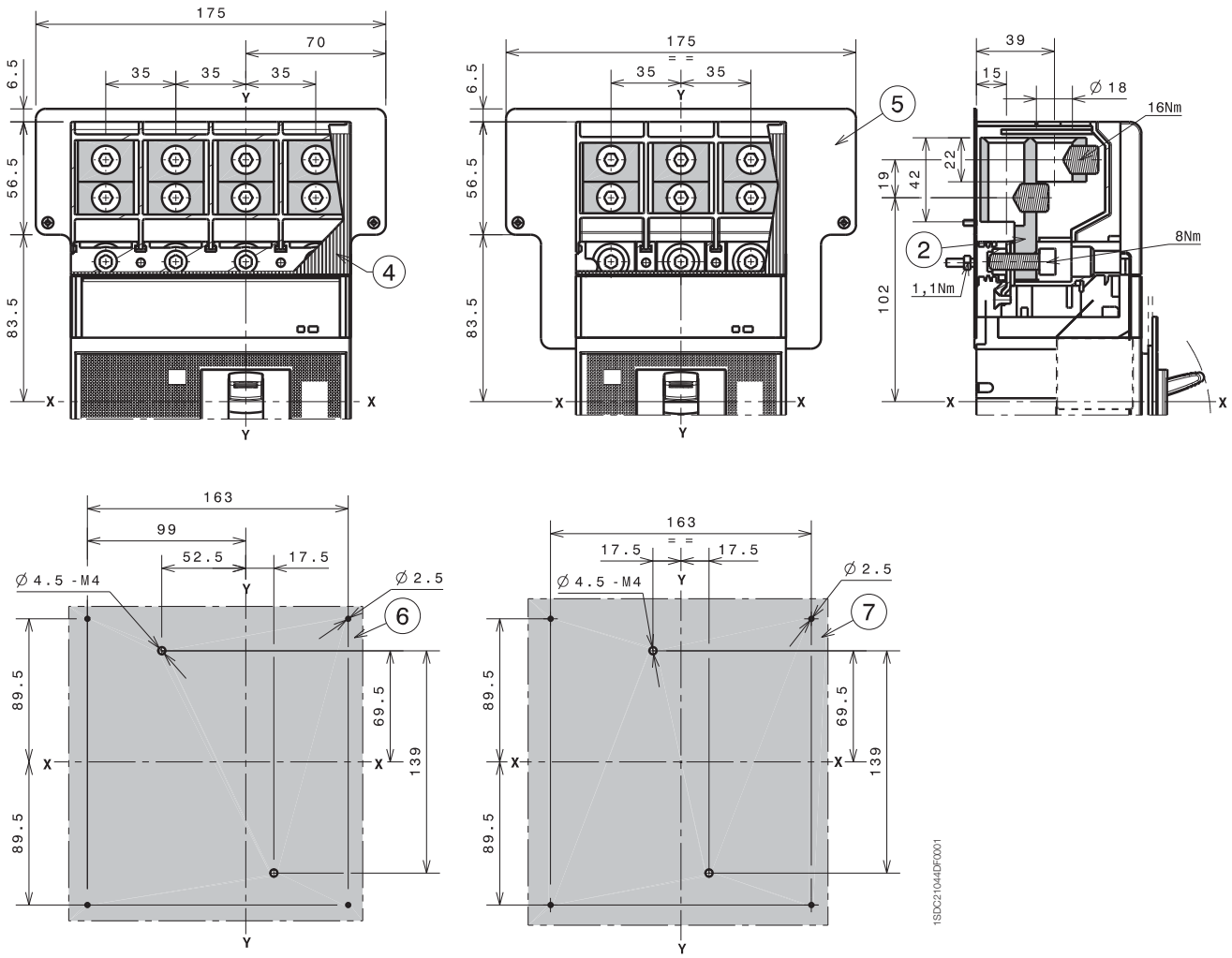

Caption

(2) 2x35...150mm² terminals FCCuAl

(4) Terminal covers with degree of protection IP40 (optional) provided

(5) Provided rear insulated plate (mandatory for CuAl 2x150mm² cables)

(6) Drilling template for circuit-breaker IV fixing with insulating courtes plate

(7) Drilling template for circuit-breaker III fixing with insulating courtes plate

Terminals FCCu

Caption

(1) Terminals FCCu

Note: 25mm insulating barriers between phases (compulsory) provided as standard with the circuit-breaker

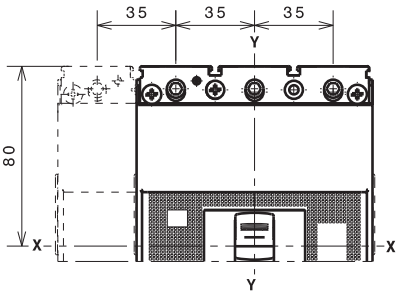

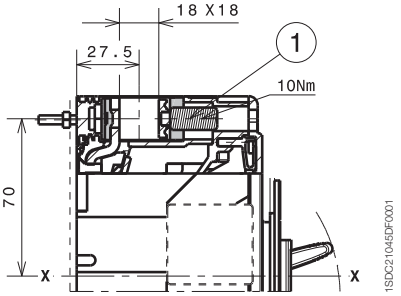

Terminals MC

Caption

(2) Multicable terminals

(3) Terminal covers with degree of protection IP40 (optional) provided

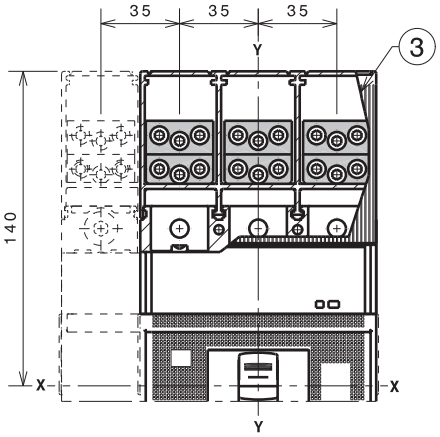

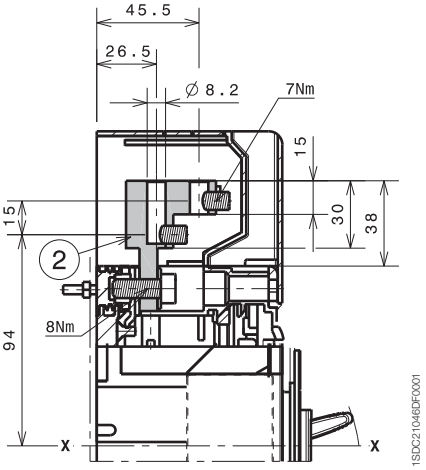

Overall dimensions

Tmax XT4 - Terminals for fixed circuit-breaker

Terminals R

Caption

1. Adjustable rear terminals
2. Bottom terminal covers with degree of protection IP40 (optional) provided
3. Drilling template for circuit-breaker III fixing on sheet
4. Drilling template for circuit-breaker IV fixing on sheet

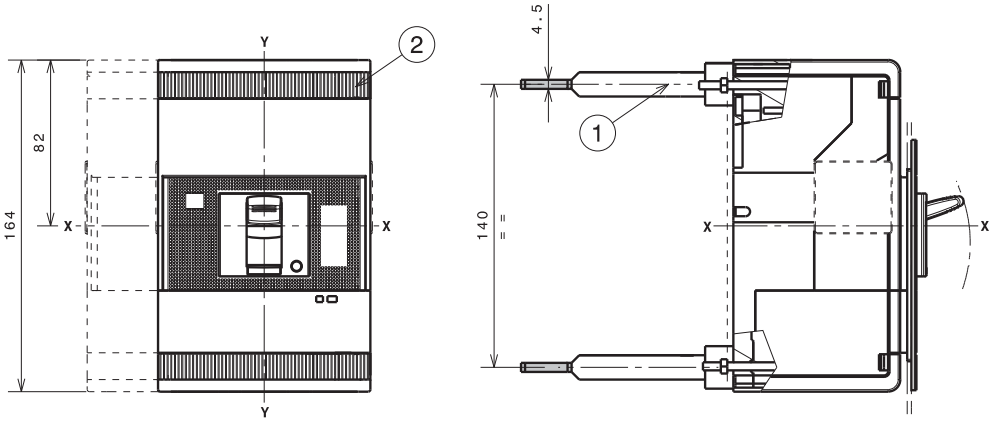

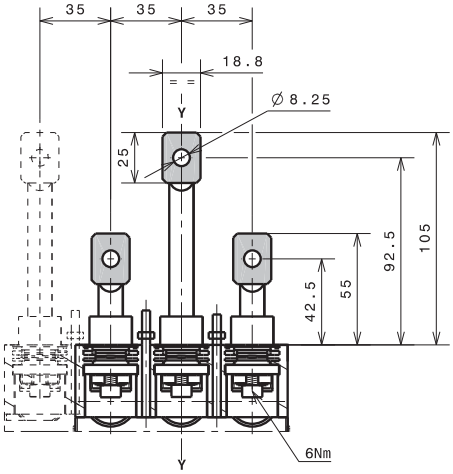

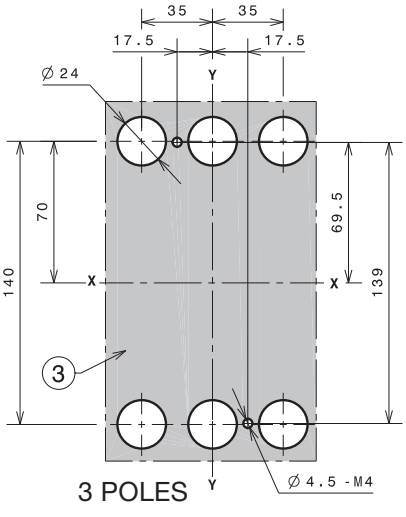

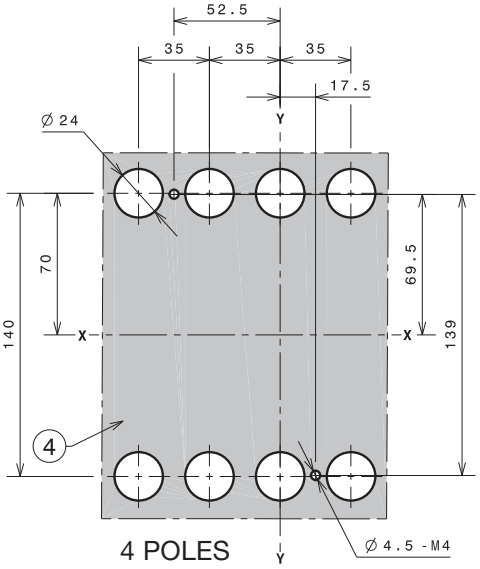

1SDC21047DF0001

Overall dimensions

Tmax XT4 - Accessories for fixed circuit-breaker

Rotary handle operating mechanism on circuit-breaker (RHD)

Caption

(2) Rotary handle operating mechanism on circuit-breaker

(4) Drilling template of door with direct rotary handle

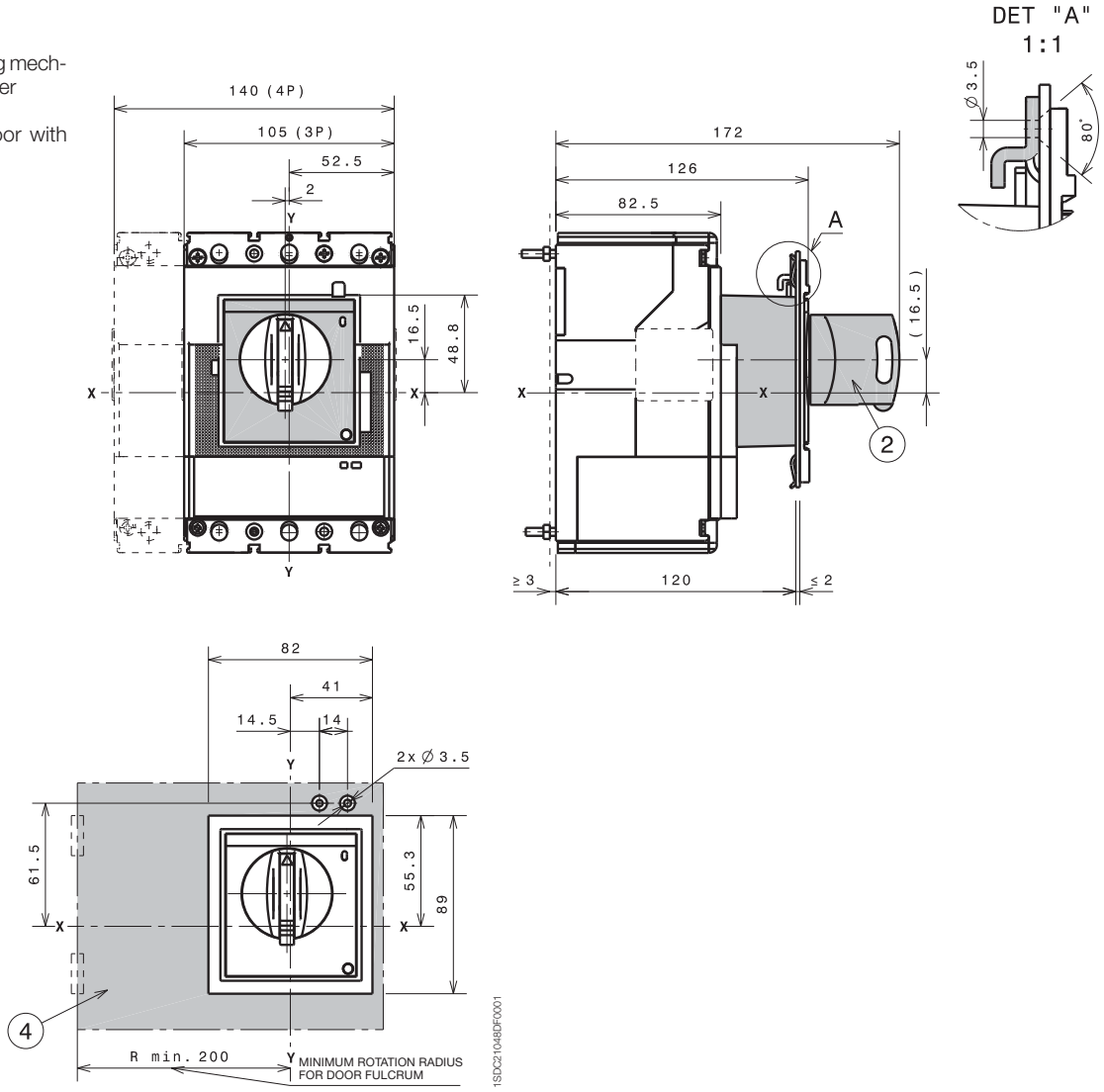

Rotary handle operating mechanism of the compartment door (RHE)

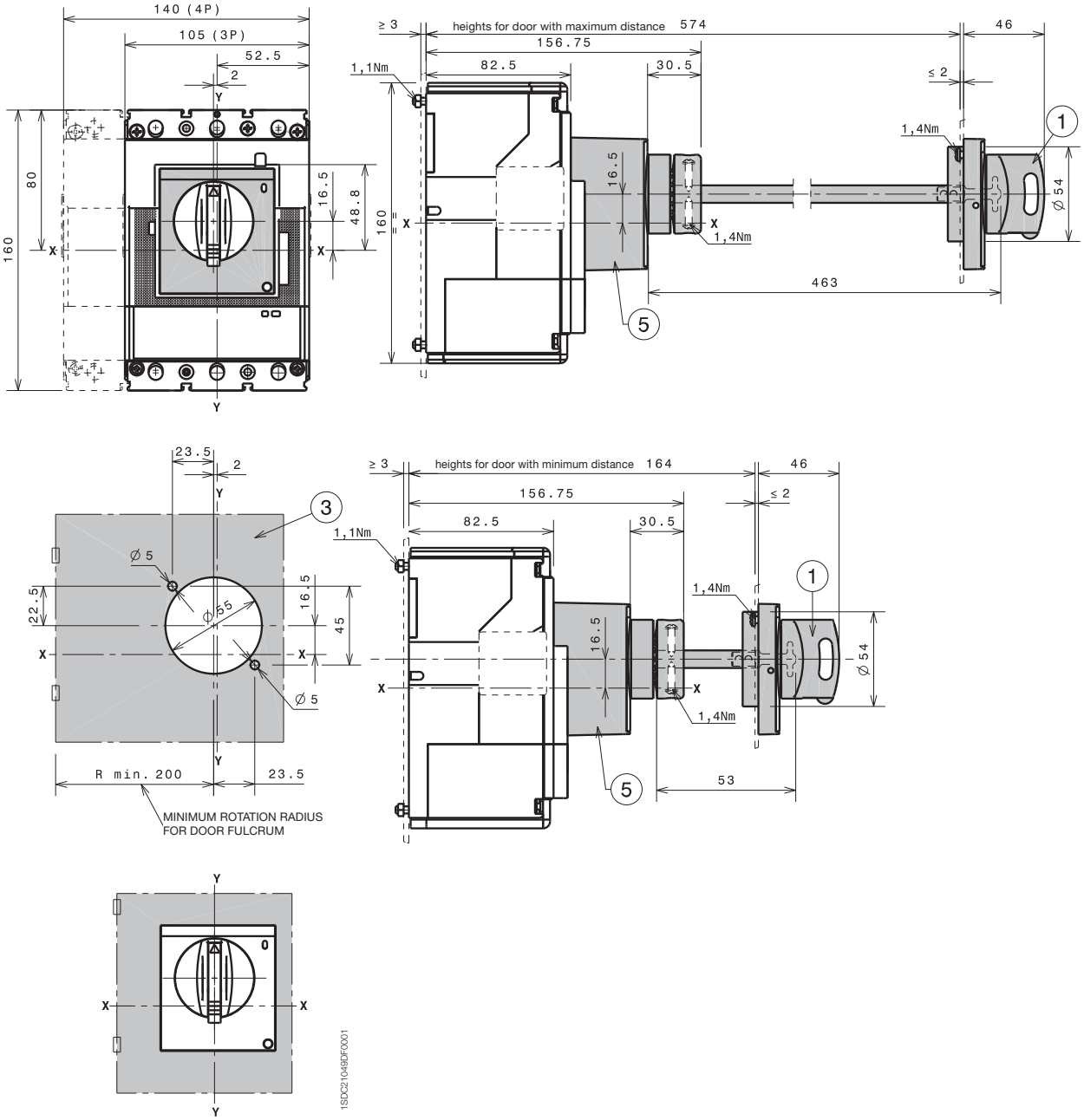

Caption

(1) Rotary handle operating mechanism of the compartment door

(3) Drilling template for RHE

(5) Transmission unit

Stored energy motor operator (MOE)

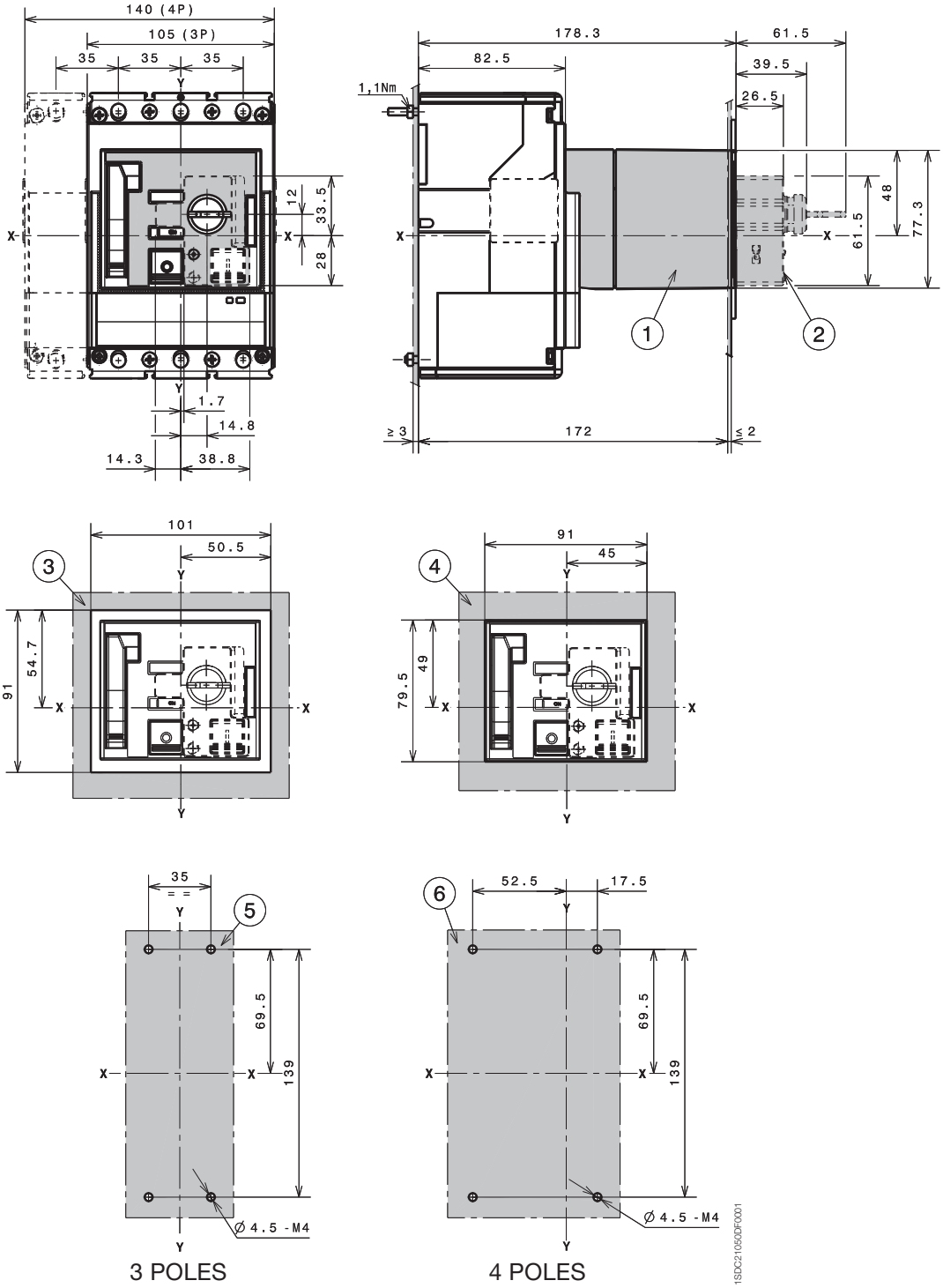

Caption

1. Stored energy motor operator (MOE)
2. Key lock optional
3. Drilling template of door with direct rotary handle with flange (MOE)
4. Drilling template of door with direct rotary handle without flange (MOE)
5. Drilling template for circuit-breaker III fixing on sheet
6. Drilling template for circuit-breaker IV fixing on sheet

Overall dimensions

Tmax XT4 - Accessories for fixed circuit-breaker

Front for lever operating mechanism (FLD)

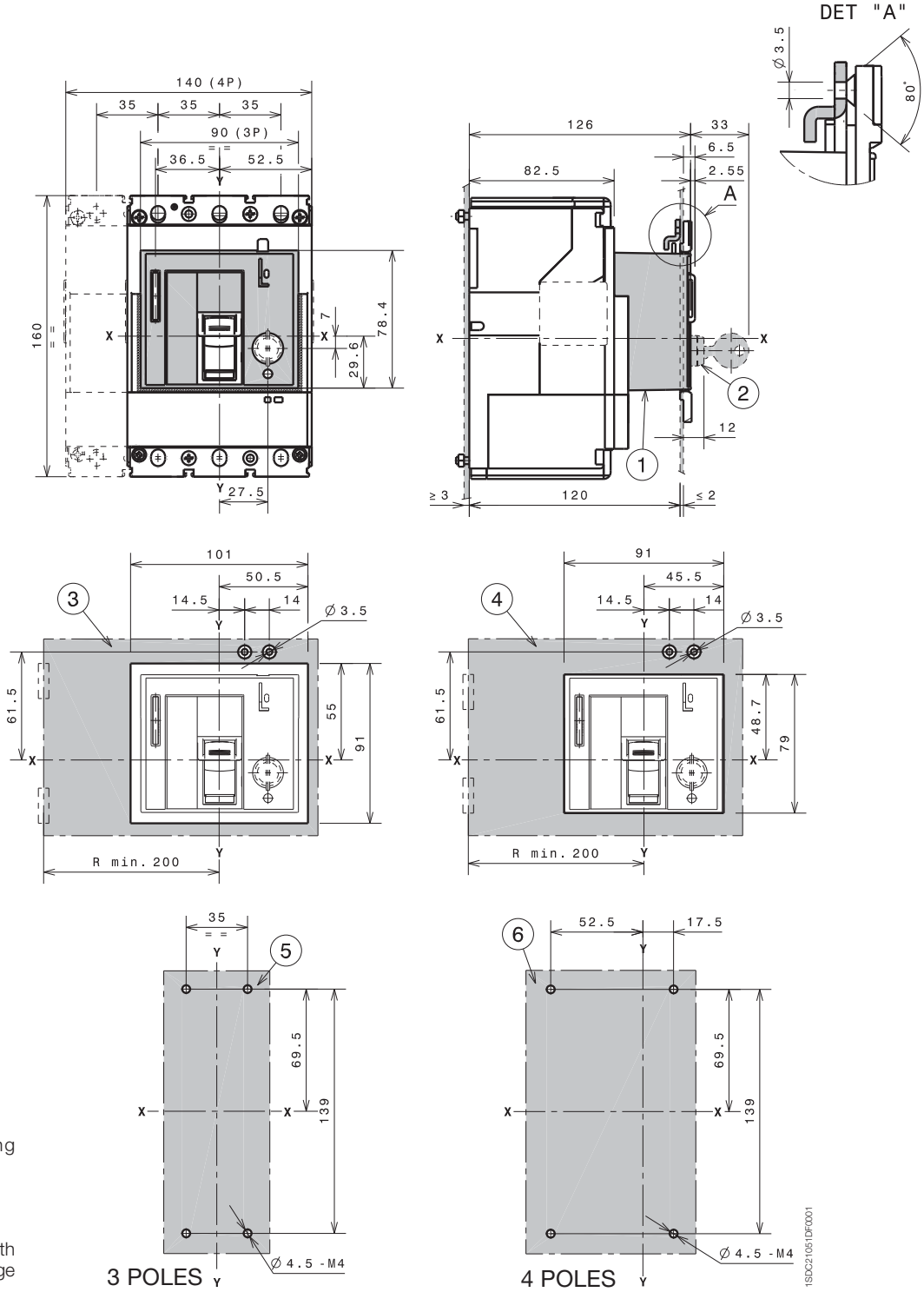

Caption

1. Front for lever operating mechanism (FLD)
2. Key lock optional
3. Drilling template of door with direct rotary handle with flange (FLD)
4. Drilling template of door with direct rotary handle without flange (FLD)
5. Drilling template for circuit-breaker III fixing on sheet
6. Drilling template for circuit-breaker IV fixing on sheet

Residual current RC Sel

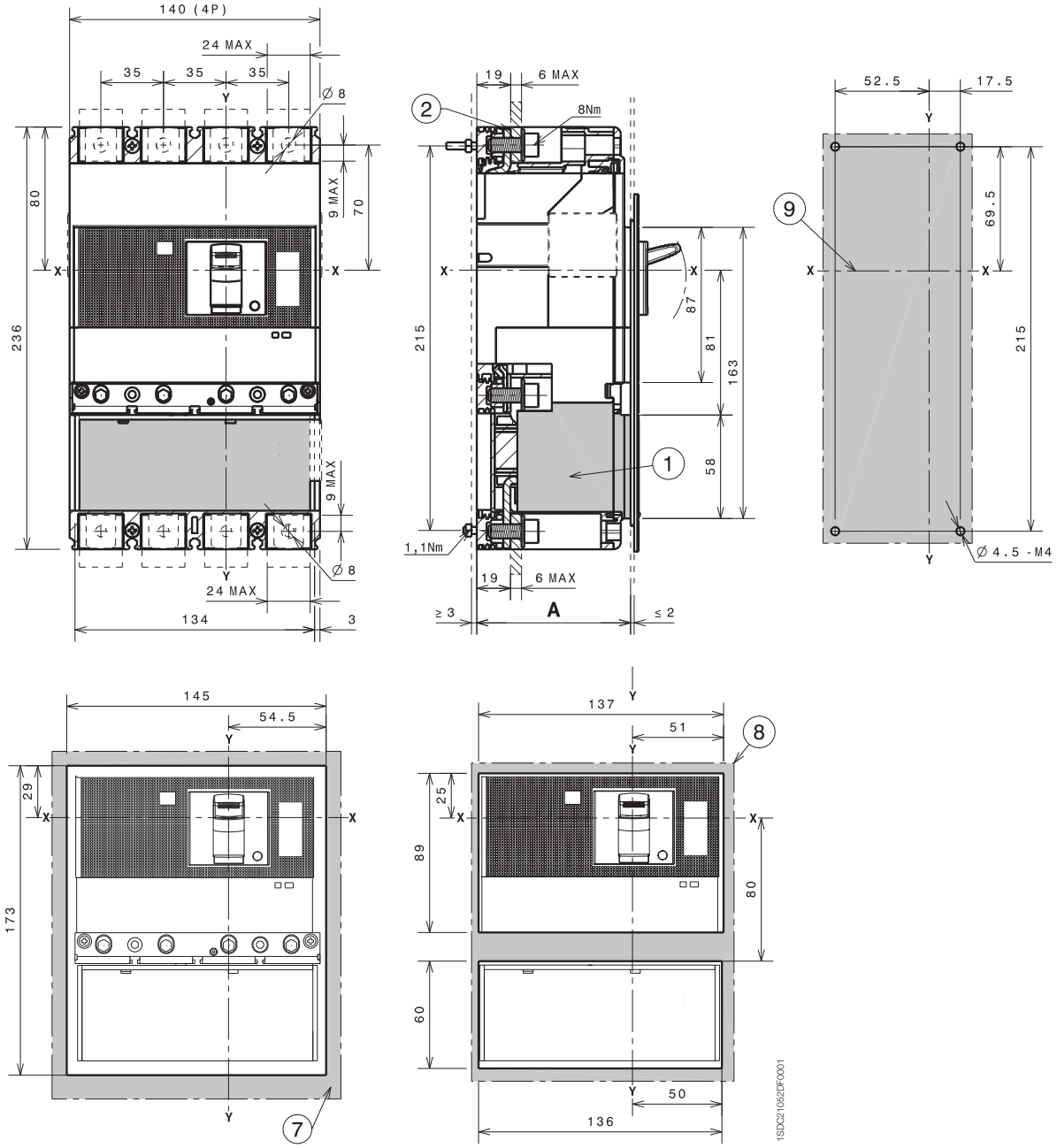

Caption

1. Residual current
2. Front terminals
7. Drilling template of door with direct rotary handle and fixing with flange
8. Drilling template of door with direct rotary handle and fixing without flange
9. Drilling template for circuit-breaker fixing on sheet

		A
With standard flange	IV	86
Without flange	IV	83.5

Overall dimensions

Tmax XT4 - Installation for plug-in circuit-breaker

Fixing on sheet

Caption

1. Fixed part
2. Moving part

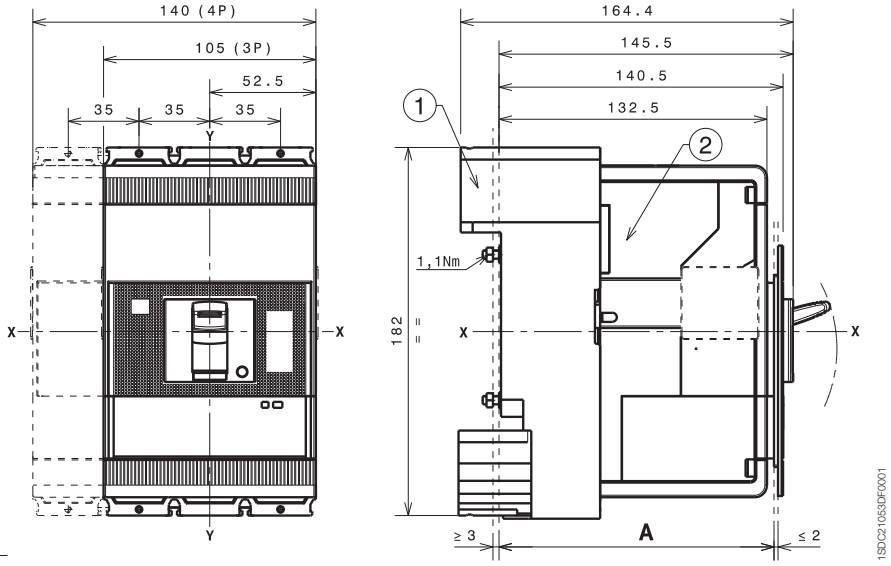

Fixing at 50mm		A
With standard flange	III - IV	136
Without flange	III - IV	133.5
	III - IV	141.5

Fixing at 70mm for front extended terminals		A
With standard flange	III - IV	156
Without flange	III - IV	153.5
	III - IV	161.5

Drilling templates for support sheet

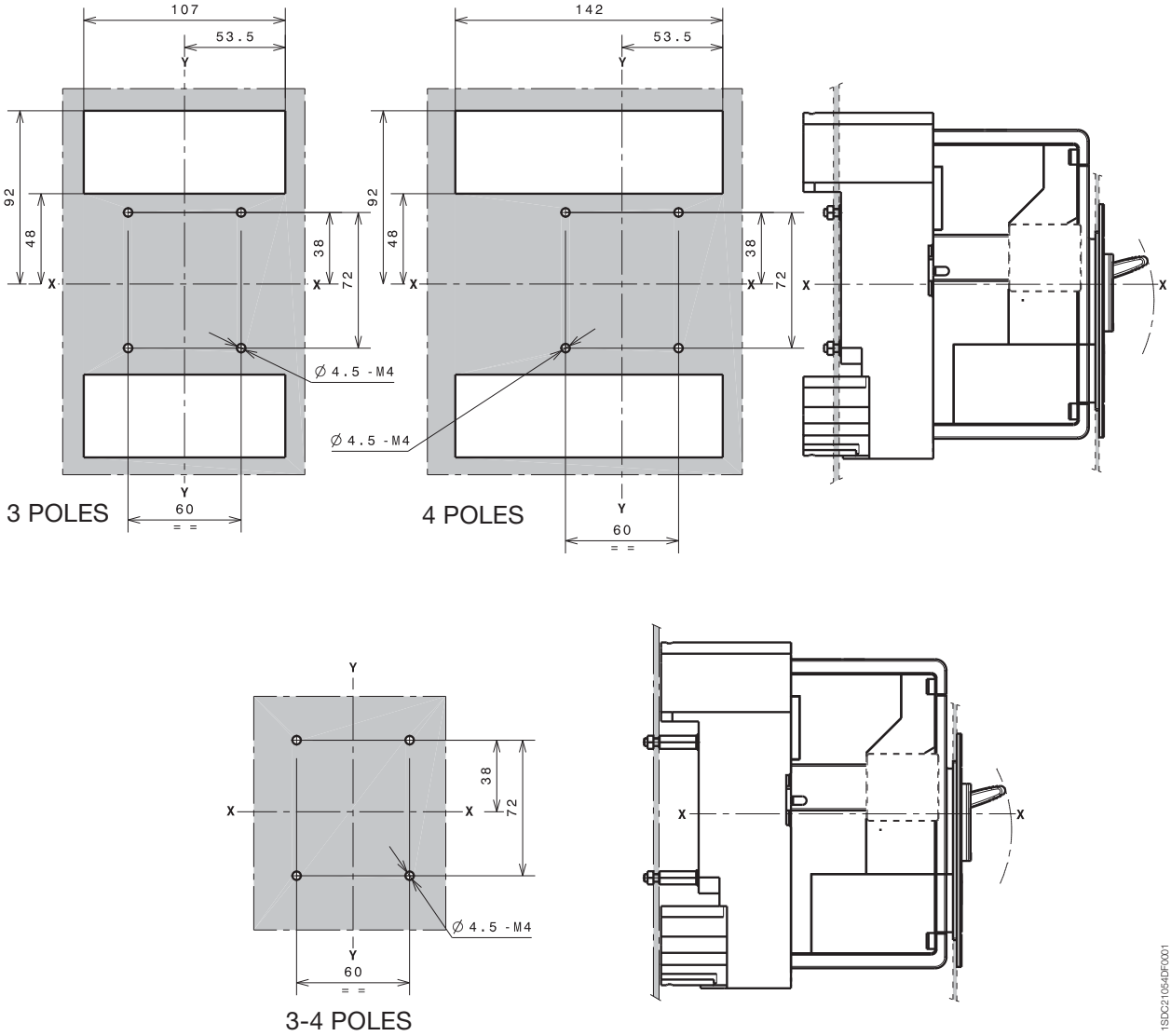

Overall dimensions

Tmax XT4 - Installation for plug-in circuit-breaker

Flanges

Caption

1. Flange for plug-in circuit-breaker III
2. Flange for plug-in circuit-breaker IV
3. Flange for plug-in circuit-breaker III-IV with MOE and FLD
4. Flange for circuit-breaker III-IV with direct rotary handle
7. Flange for plug-in circuit-breaker IV with front extended terminals and residual current
8. Optional flange

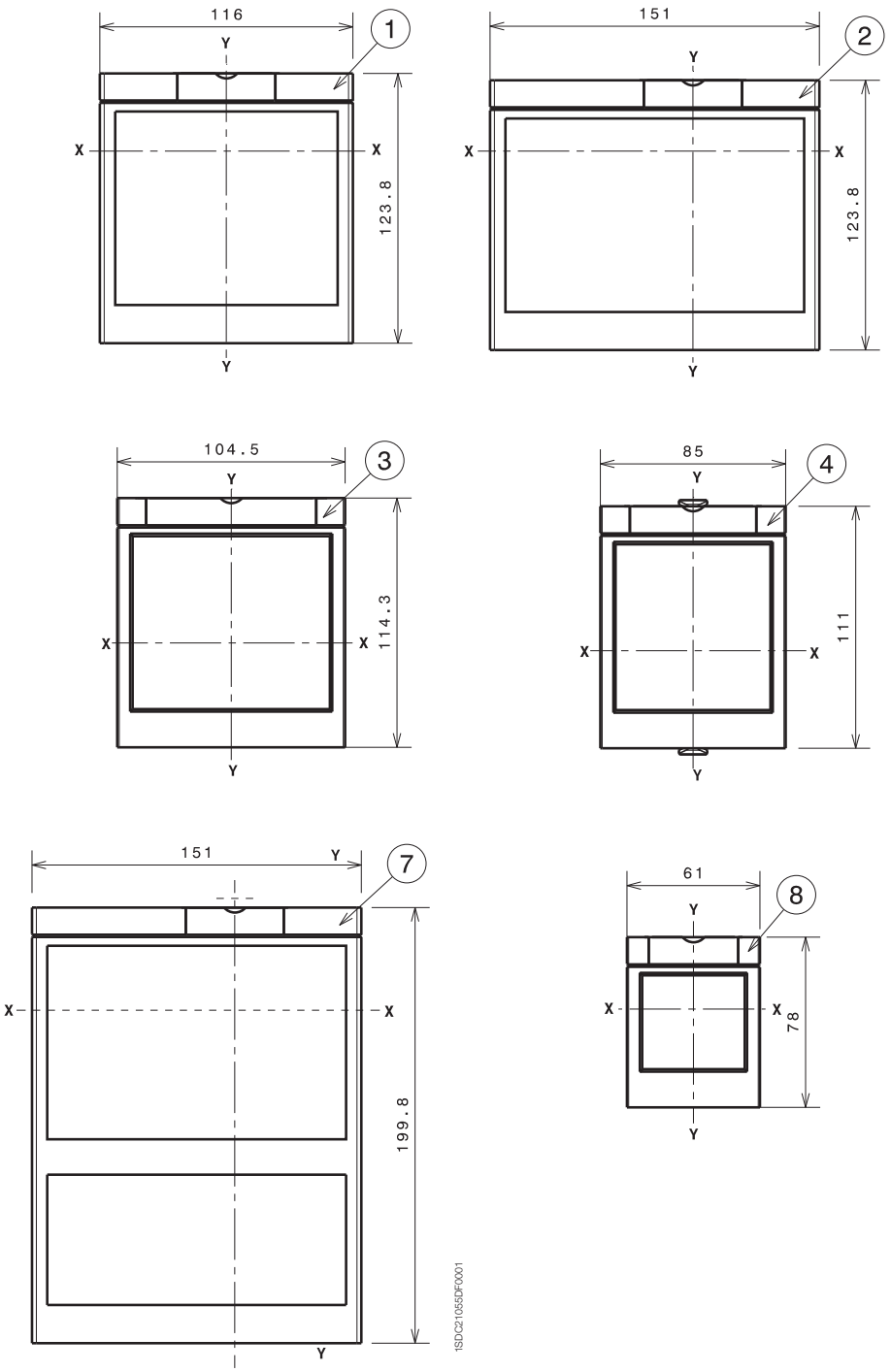

Drilling templates compartment door

With standard flange

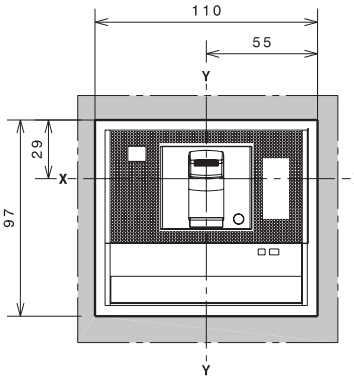

B=136 C=156
3 POLES

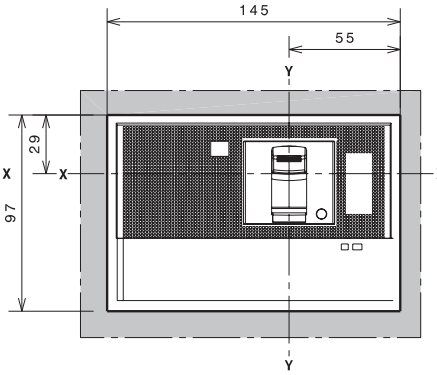

B=136 C=156
4 POLES

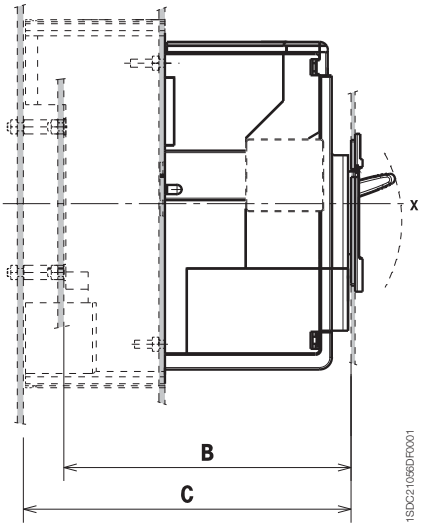

Without flange

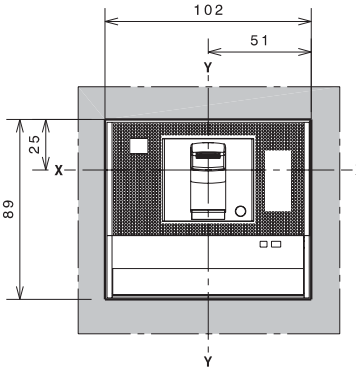

B=133.5 C=153.5
3 POLES

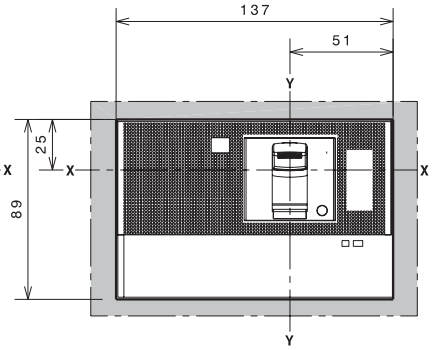

B=133.5 C=153.5
4 POLES

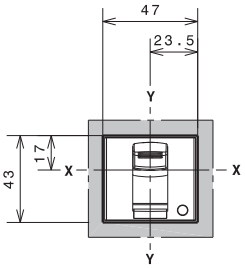

B=141.5 C=161.5
3-4 POLES

1SDC210570DF0001

With optional flange

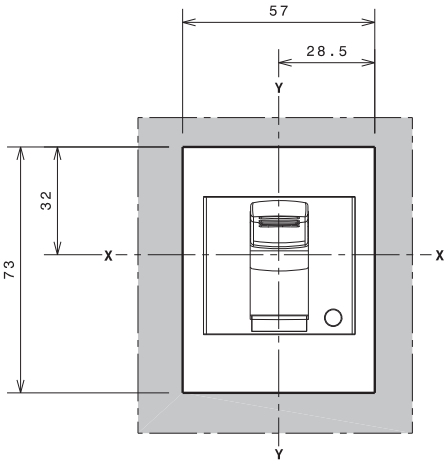

B=142 C=162
3-4 POLES

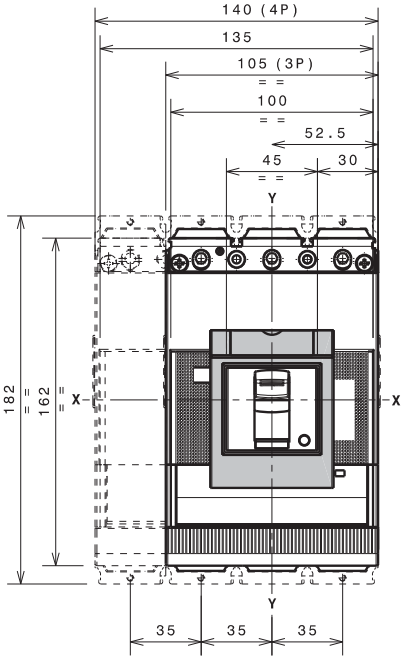

Overall dimensions

Tmax XT4 - Terminals for plug-in circuit-breaker

Terminals EF

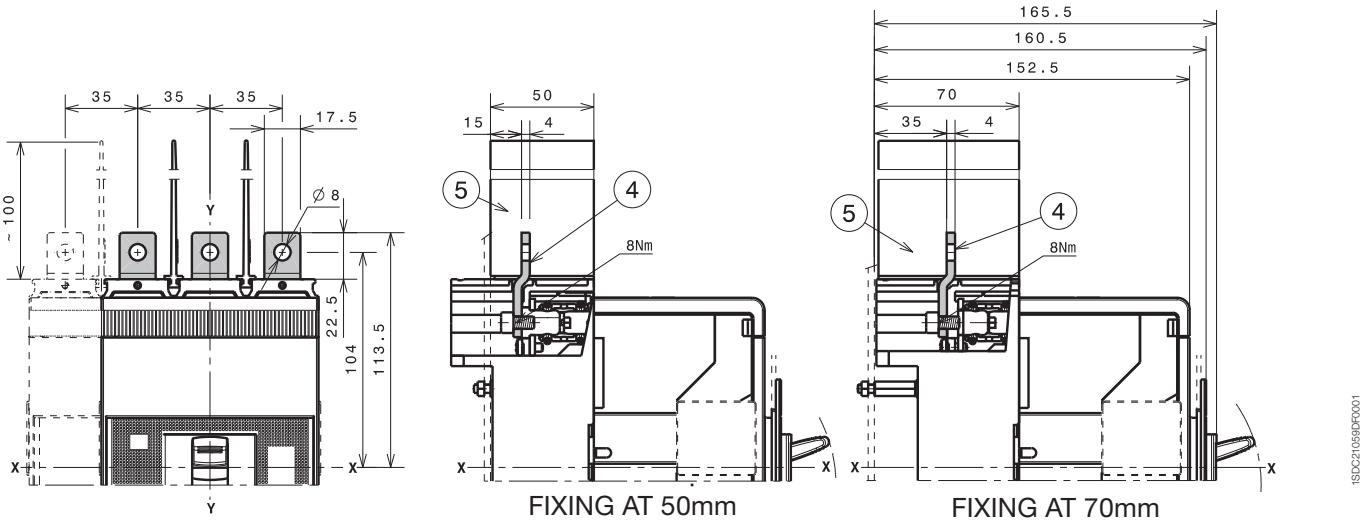

FIXING AT 50mm

FIXING AT 70mm

Caption

(4) Front extended terminals

(5) 100mm insulating barriers between phases (compulsory) provided

Note: insulated plate (compulsory) provided

Terminals ES

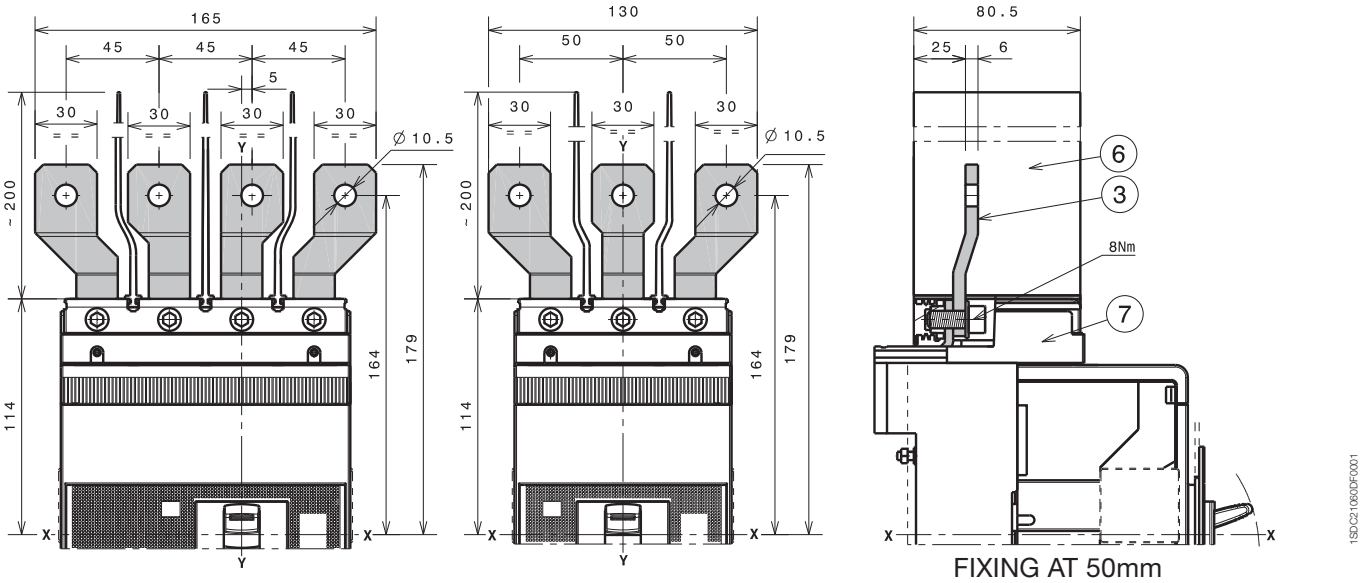

FIXING AT 50mm

Caption

(3) Front extended spread terminals

(6) 200mm insulating barriers between phases (compulsory) provided

(7) Adaptor (compulsory) not provided

Note: insulated plate (compulsory) provided

1x1...185mm² terminals FCCuAl

Caption

(1) 1x1...185mm² front terminals FCCuAl

(2) 25mm insulating barriers between phases (compulsory) provided

(6) Adaptor (compulsory) not provided

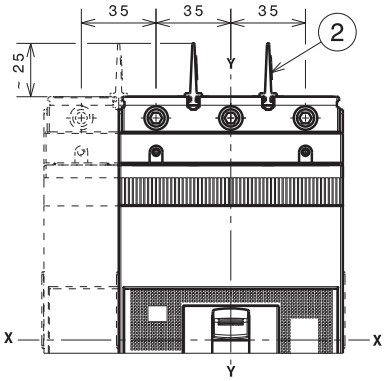

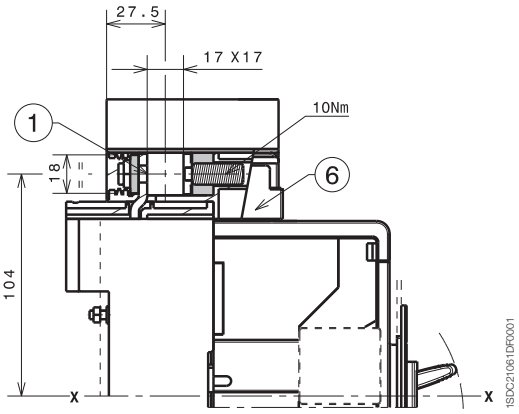

FIXING AT 50mm

2x35...150mm² terminals FCCuAl

Caption

(1) 2x150mm² external terminal FCCuAl

(2) High terminal covers with degree of protection IP40 (optional) provided

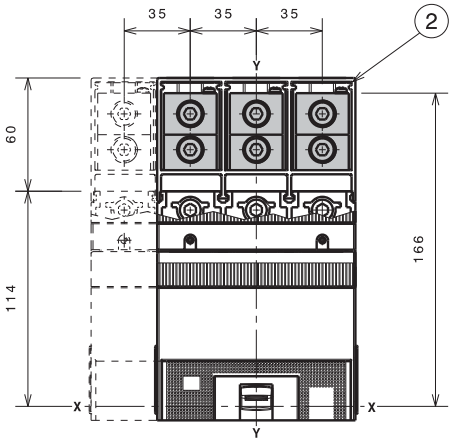

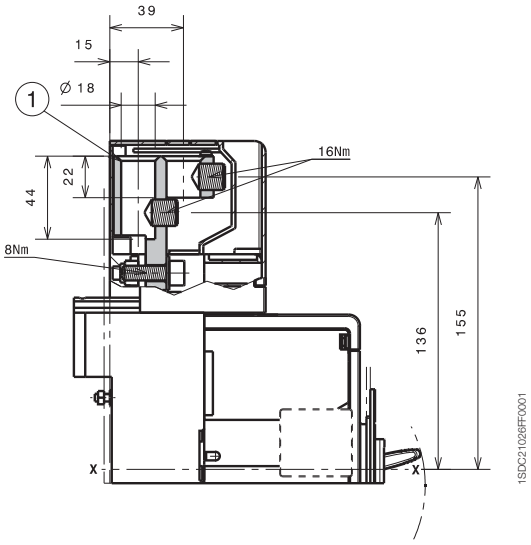

Terminals FCCu

Caption

(5) Terminals FCCu

(6) Adaptor (compulsory) not provided

Note: 25mm insulating barriers between phases (compulsory) provided as standard with the circuit-breaker

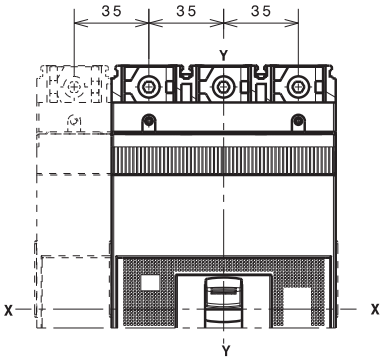

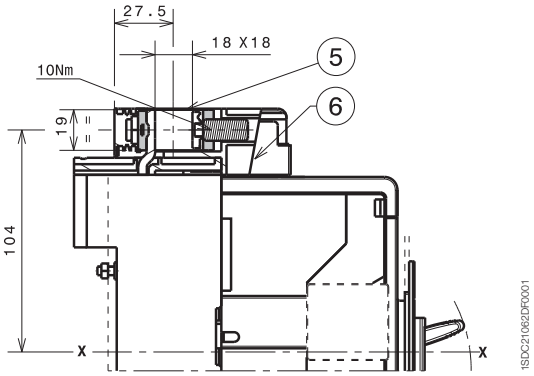

FIXING AT 50mm

Overall dimensions

Tmax XT4 - Terminals for plug-in circuit-breaker

Terminals MC

Caption

(3) Provided high terminal covers with degree of protection IP40 (mandatory for multicables terminals)

(4) Multicable terminals

(6) Adaptor (compulsory) not provided

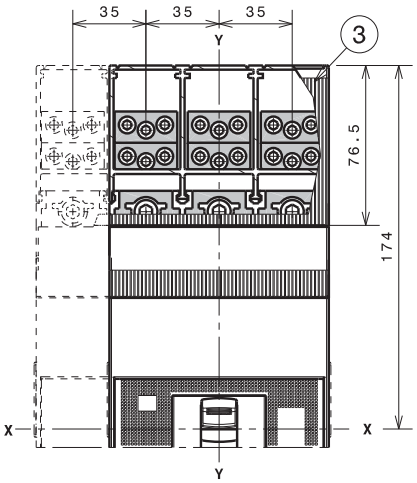

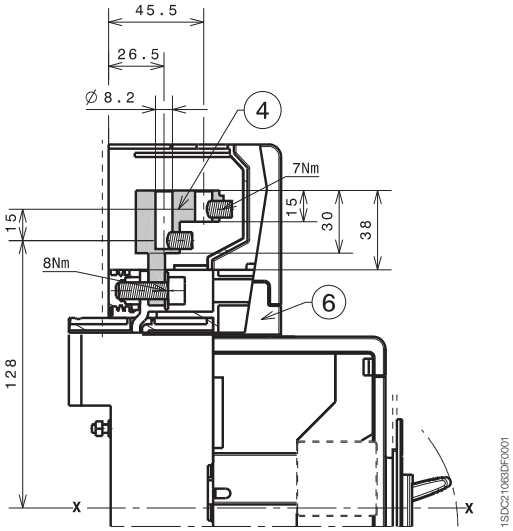

FIXING AT 50mm

Terminals HR/VR

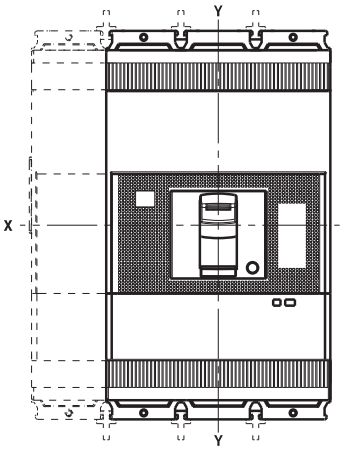

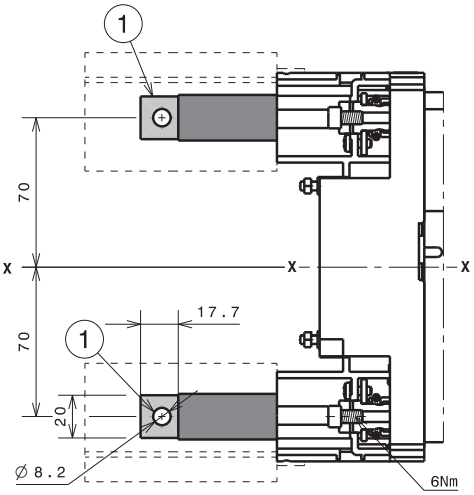

FIXING AT 50mm

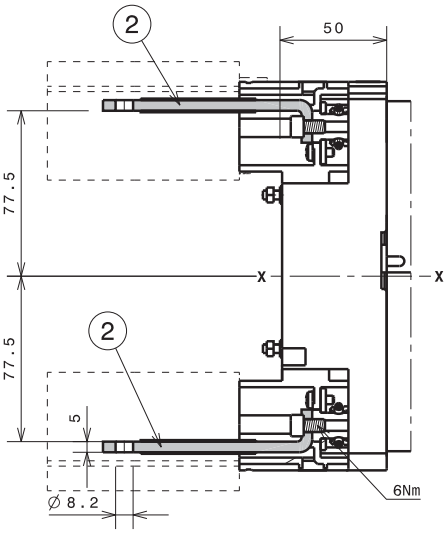

FIXING AT 50mm

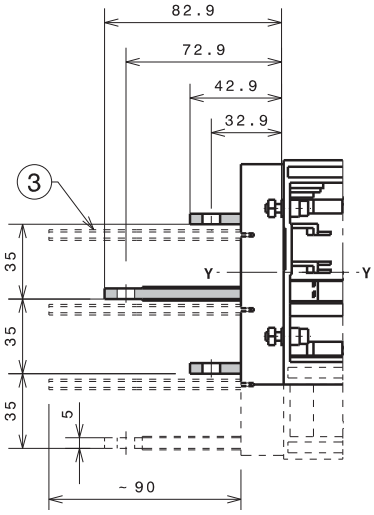

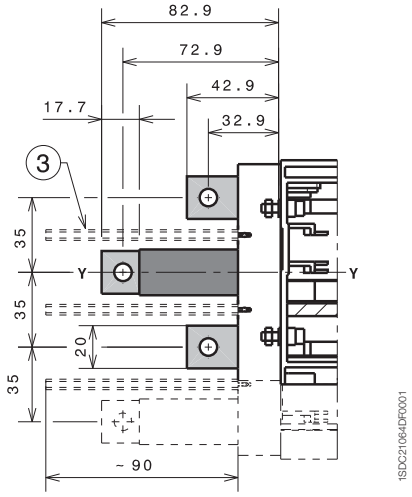

Caption

(1) Rear vertical terminals

(2) Rear horizontal terminals

(3) 90mm insulating barriers between phases (compulsory) not provided

Overall dimensions

Tmax XT4 - Accessories for plug-in circuit-breaker

Stored energy motor operator (MOE)

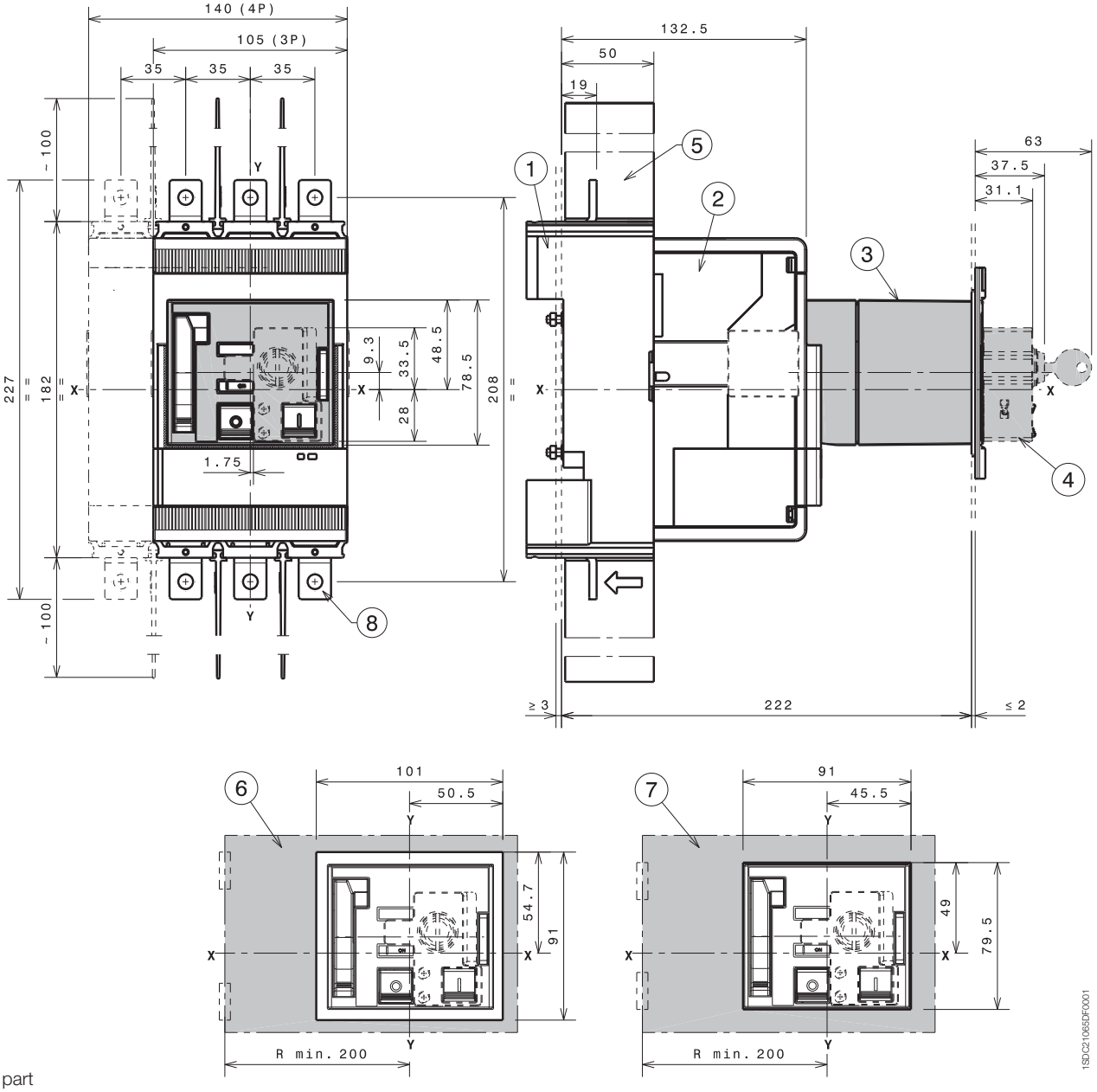

Caption

1. Fixed part
2. Moving part
3. Stored energy motor operator (MOE)
4. Key lock optional
5. 100mm insulating barriers between phases (compulsory) provided
6. Drilling template of door with direct rotary handle with flange
7. Drilling template of door with direct rotary handle without flange
8. Extended terminals

Overall dimensions

Tmax XT4 - Accessories for plug-in circuit-breaker

Front for lever operating mechanism (FLD)

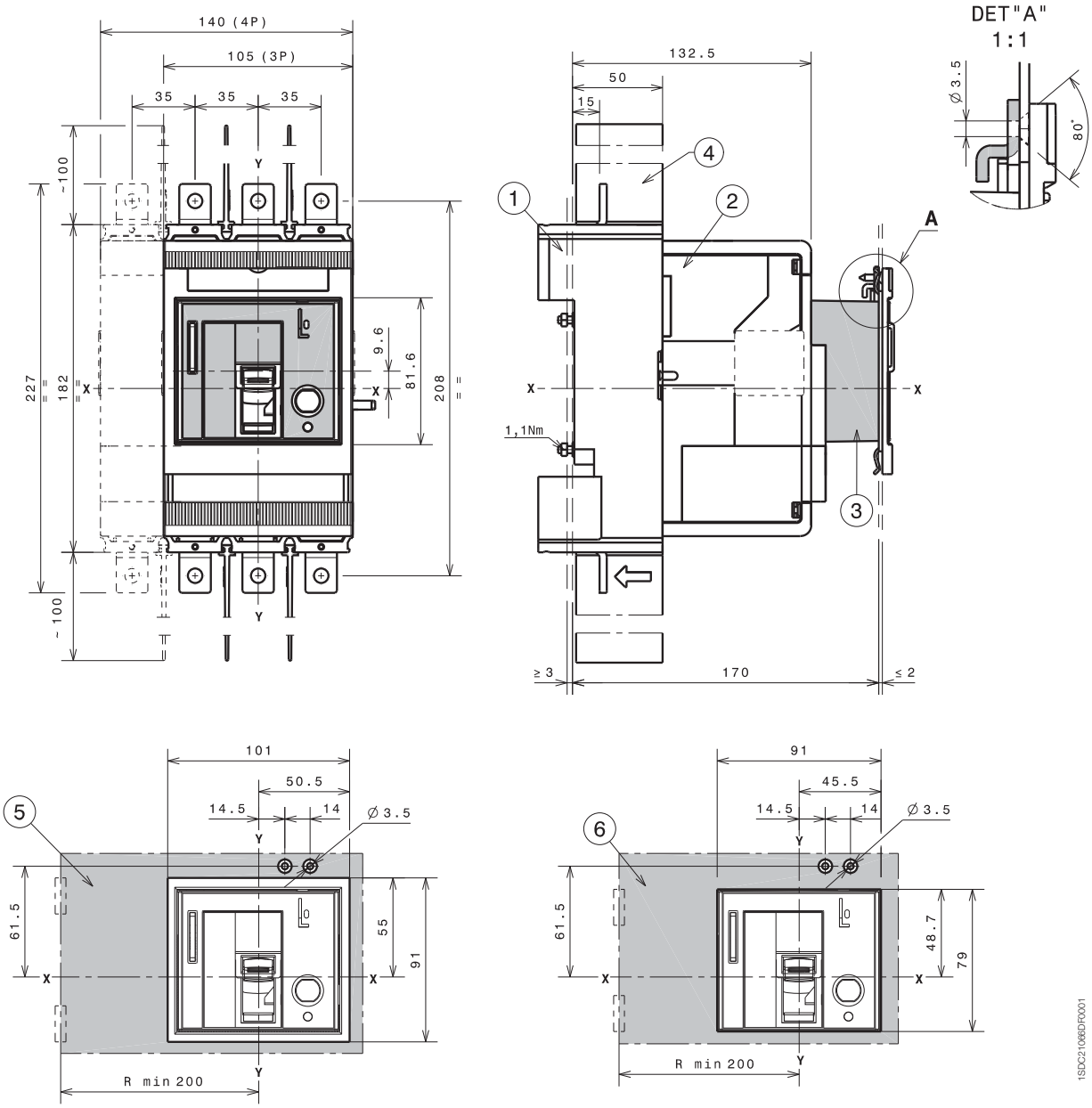

Caption

1. Fixed part
2. Moving part
3. Front for lever operating mechanism (FLD)
4. 100mm insulating barriers between phases (compulsory) provided
5. Drilling template of door with direct rotary handle with flange
6. Drilling template of door with direct rotary handle without flange

Residual current RC Sel

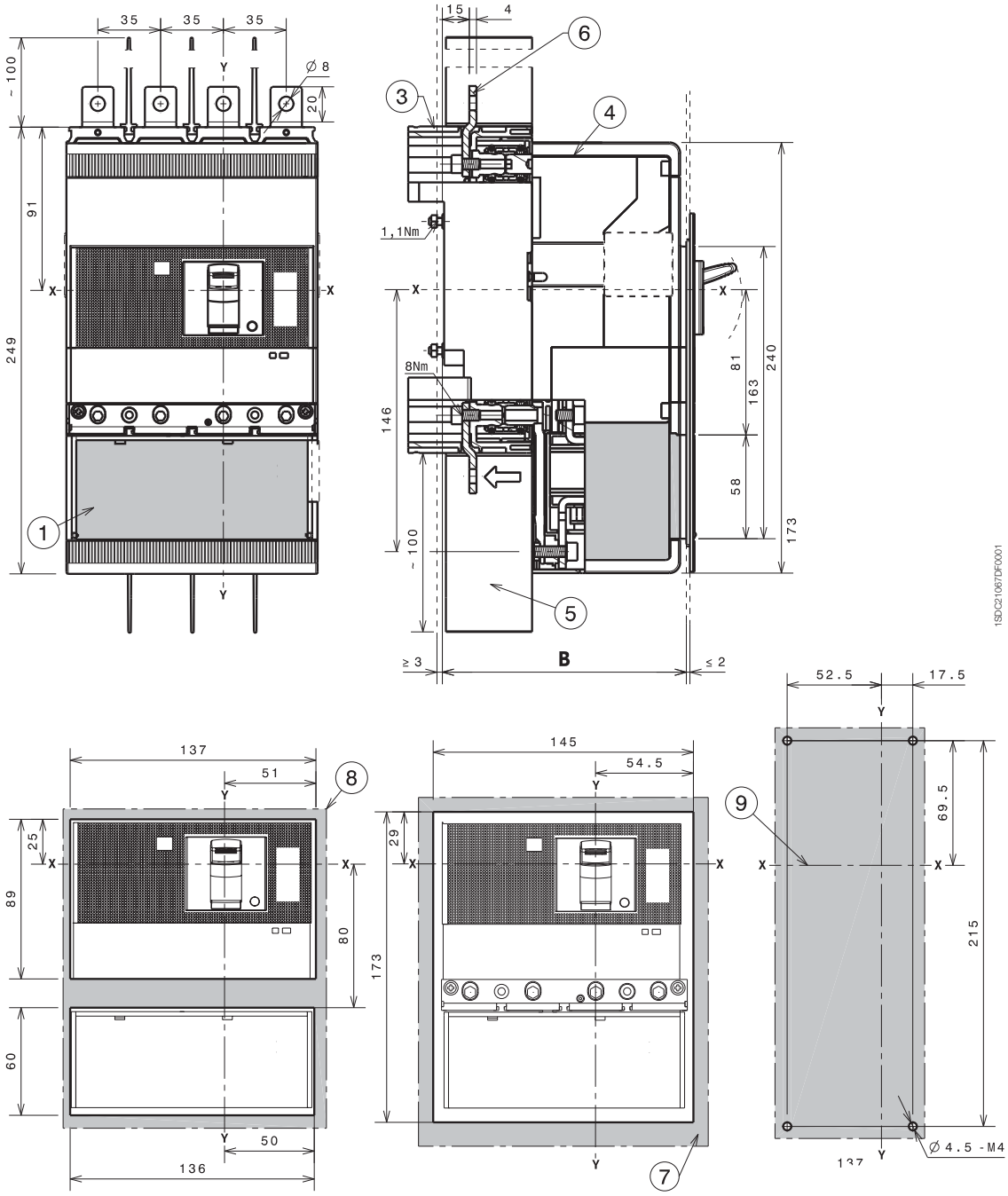

Caption

1. Residual current
3. Fixed part
4. Moving part
5. 100mm insulating barriers between phases (compulsory) provided
6. Extended terminals
7. Drilling template of door with direct rotary handle and fixing with flange
8. Drilling template of door with direct rotary handle and fixing without flange
9. Drilling template for circuit-breaker fixing on sheet

		B
With standard flange	IV	136
Without flange	IV	133.5

Overall dimensions

Tmax XT4 - Installation for withdrawable circuit-breaker

Fixing on sheet

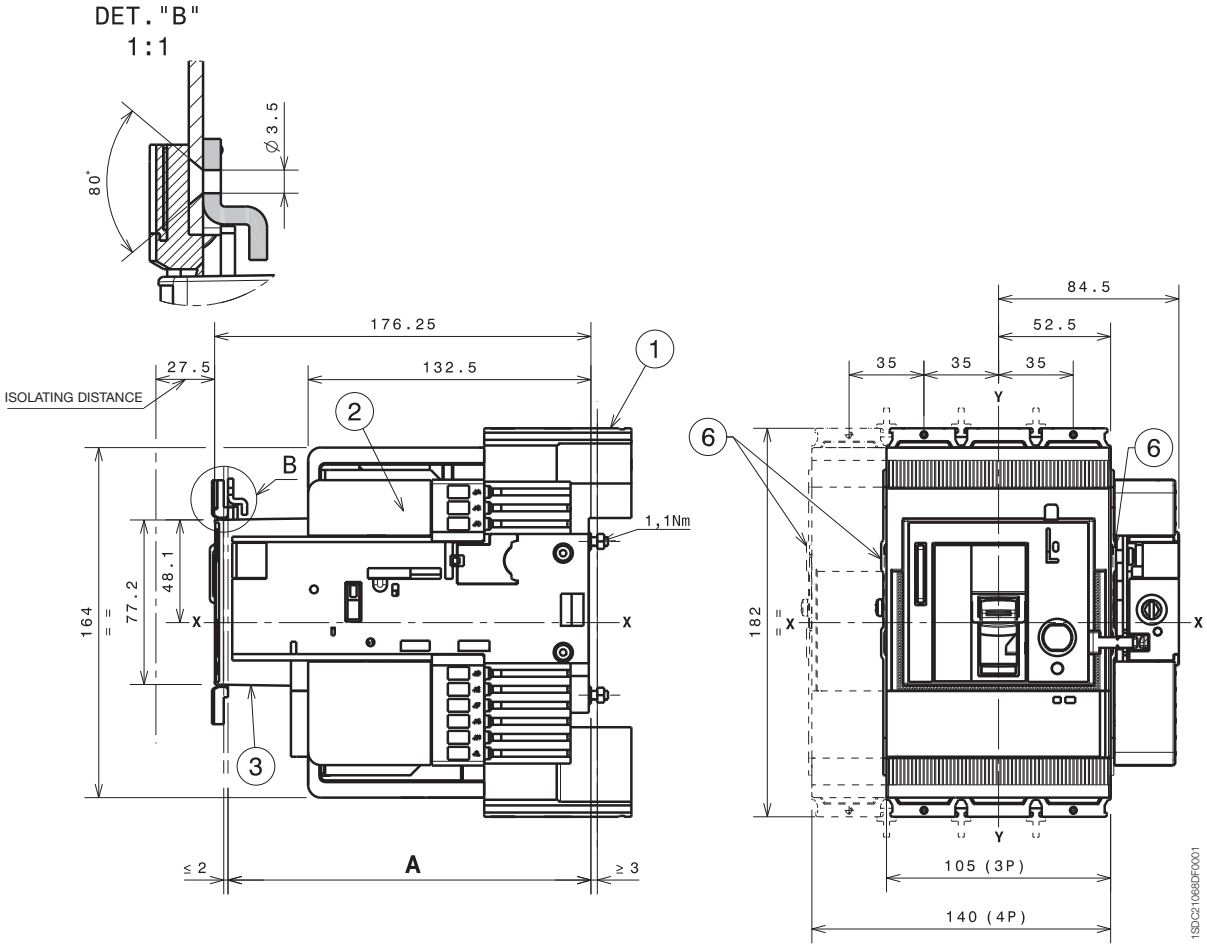

Caption

1. Fixed part
2. Moving part
3. FLD (FLD or RHD or RHE or MOE) mandatory with withdrawable version
6. Optional wiring ducts

			A
With standard flange	III - IV	Fixing at 50mm	170
	III - IV	Fixing at 70mm for front extended terminals	190

Drilling templates for support sheet

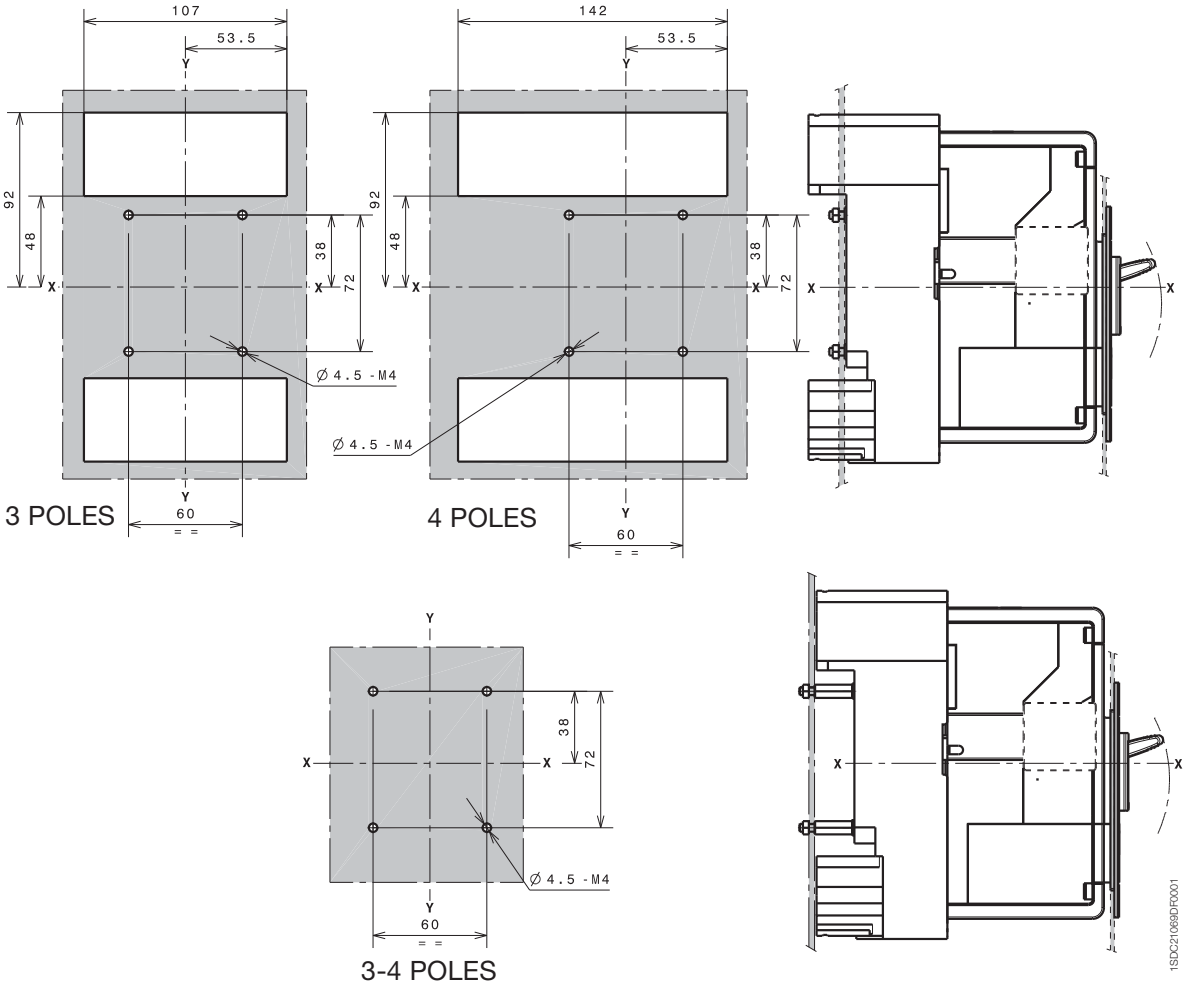

Flanges

Caption

(5) Flange for circuit-breaker III-IV estraibile

(6) Flange for circuit-breaker residual current IV withdeawable with front extended terminals

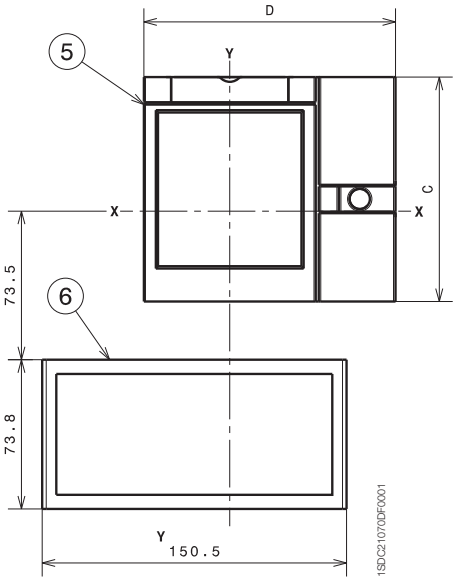

	C	D
RHD	111	124.5
FLD - MOE	114.3	134.5

Overall dimensions

Tmax XT4 - Installation for withdrawable circuit-breaker

Drilling templates compartment door

With standard flange

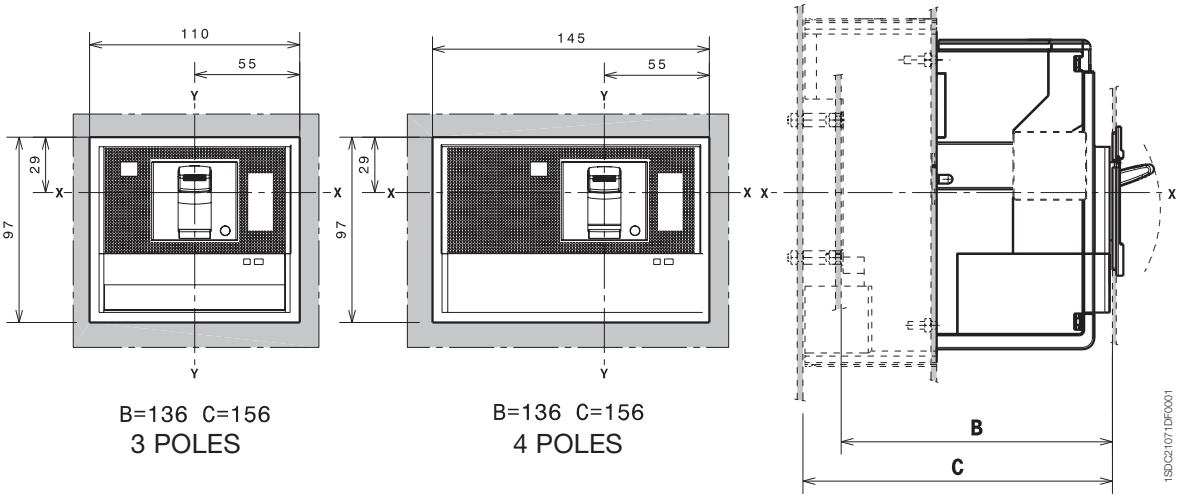

B=136 C=156
3 POLES

B=136 C=156
4 POLES

Without flange

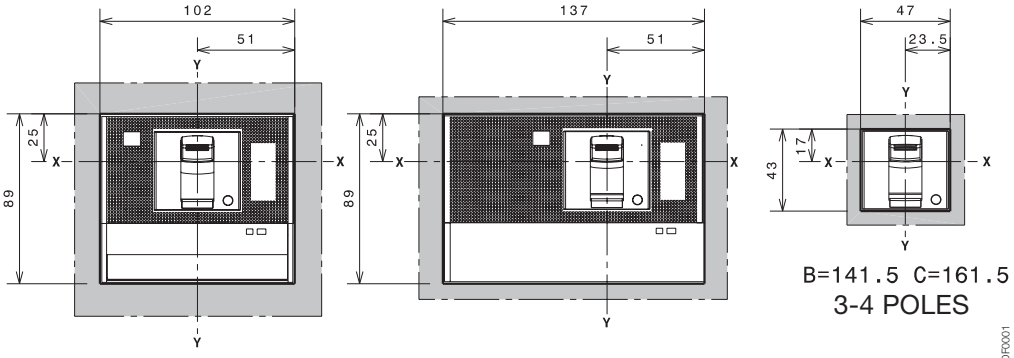

B=133.5 C=153.5
3 POLES

B=133.5 C=153.5
4 POLES

B=141.5 C=161.5
3-4 POLES

With optional flange

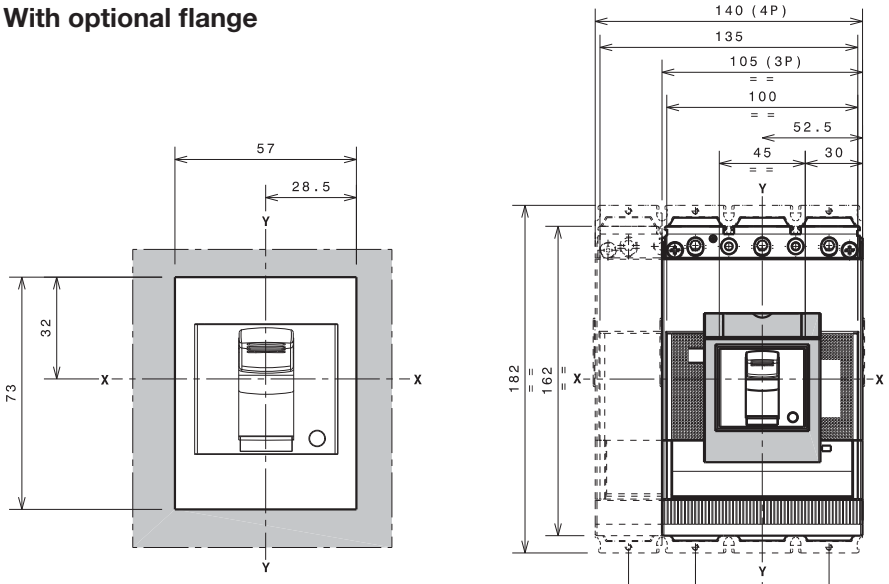

B=142 C=162
3-4 POLES

Overall dimensions

Tmax XT4 - Terminals for withdrawable circuit-breaker

Terminals EF

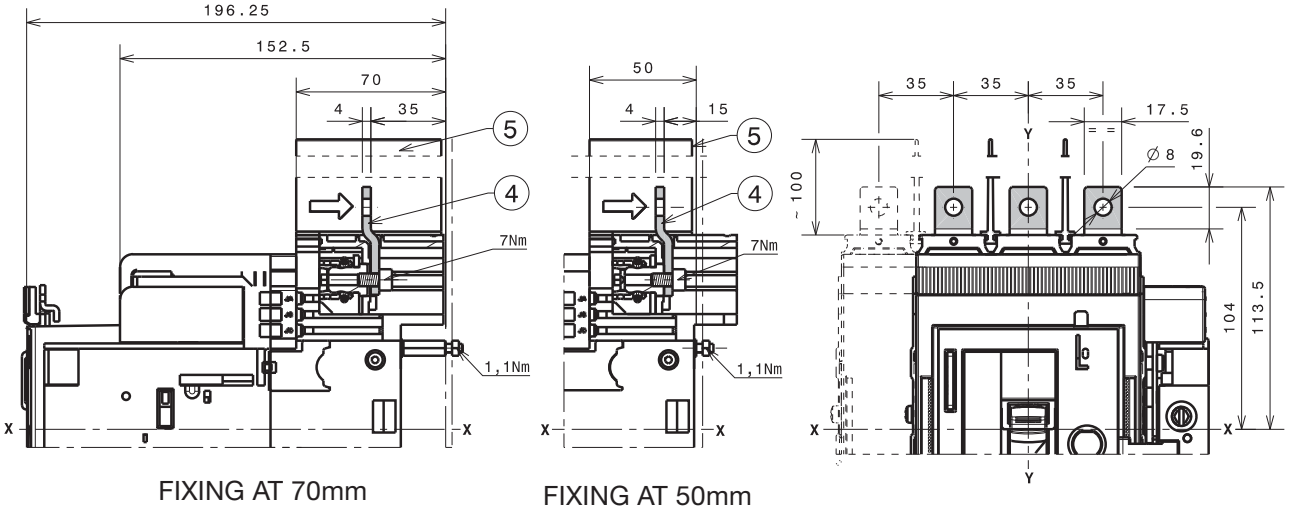

FIXING AT 70mm

FIXING AT 50mm

Caption

(4) Front extended terminals

(5) 100mm insulating barriers between phases (compulsory) provided

Note: insulated plate (compulsory) provided

Overall dimensions

Tmax XT4 - Terminals for withdrawable circuit-breaker

Terminals ES

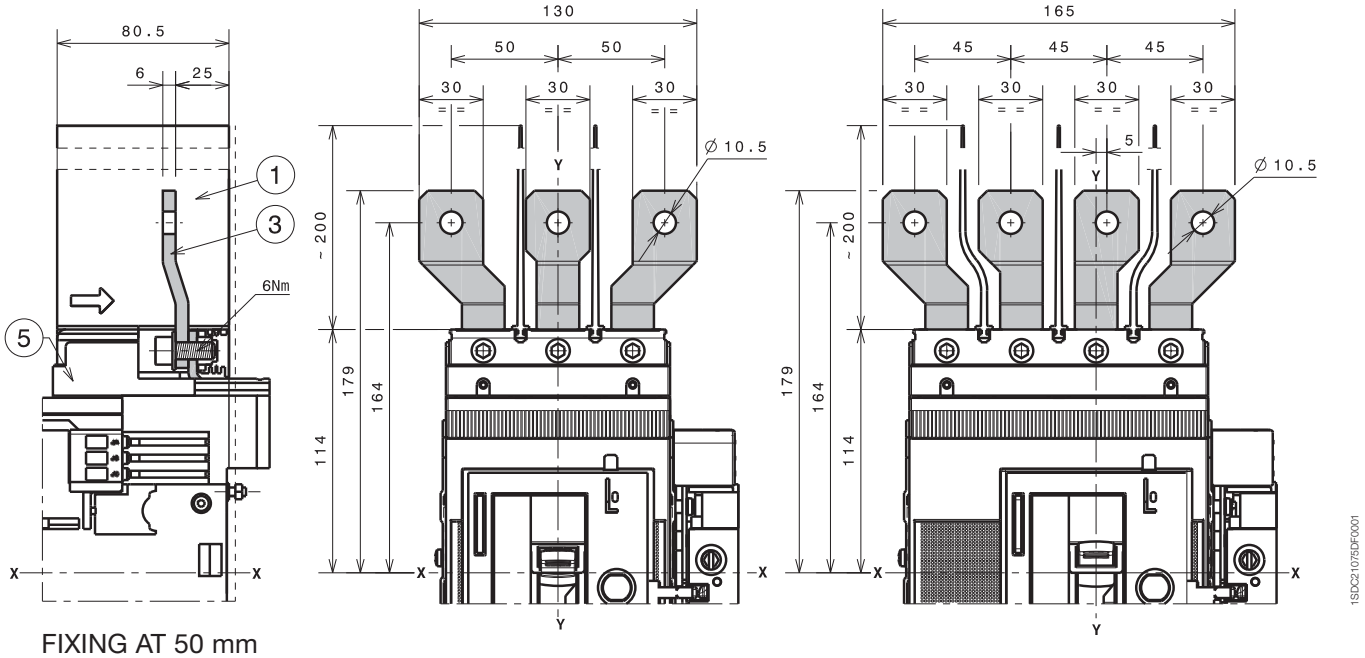

FIXING AT 50 mm

Caption

1. 200mm insulating barriers between phases (compulsory) provided
3. Front extended spread terminals
5. Adaptor (compulsory) not provided

Note: insulated plate (compulsory) provided

1x1...185mm² terminals FCCuAl

Caption

2. 25mm insulating barriers between phases (compulsory) provided
4. Front terminals FCCuAl
5. Adaptor (compulsory) not provided

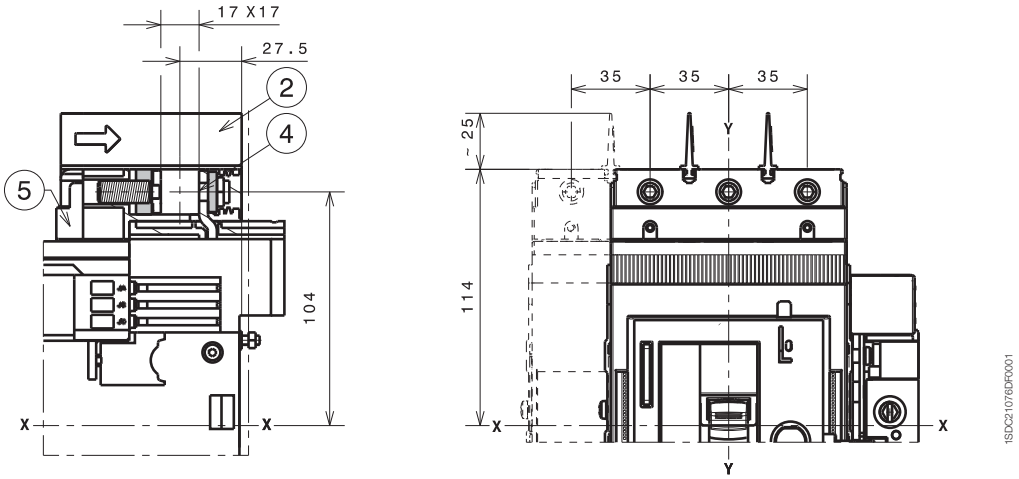

FIXING AT 50 mm

2x35...150mm² terminals FCCuAl

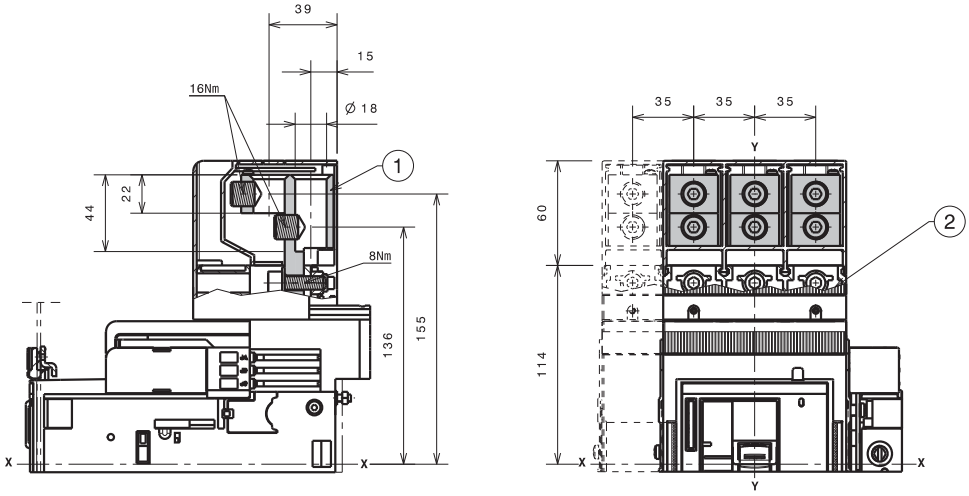

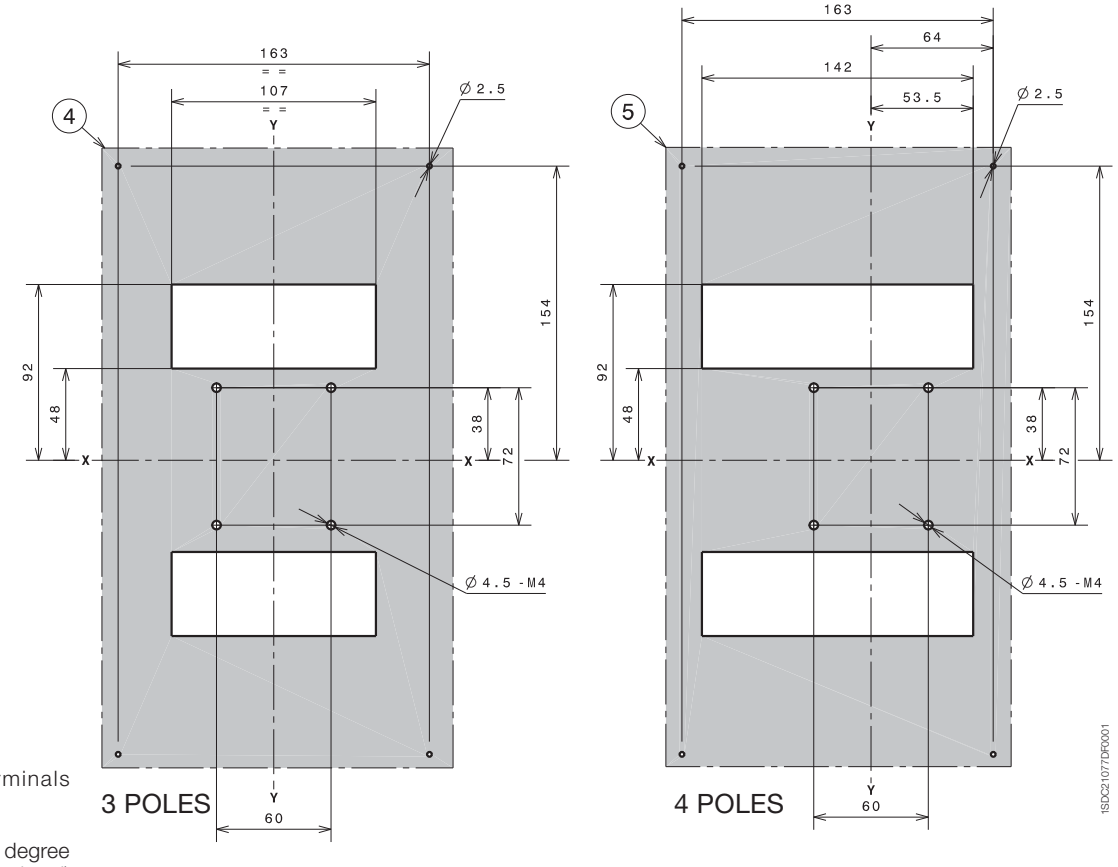

Caption

1. 2x35...150mm² terminals FCCuAl
2. Terminal covers with degree of protection IP40 (optional) provided
3. Provided rear insulated plate (mandatory for CuAl 2x150mm² cables)
4. Drilling template for circuit-breaker III fixing with insulating courtes plate
5. Drilling template for circuit-breaker IV fixing with insulating courtes plate

Overall dimensions

Tmax XT4 - Terminals for withdrawable circuit-breaker

Terminals FCCu

Caption

(2) Terminale FCCu

(4) Adaptor (compulsory) not provided

Note: 25mm insulating barriers between phases (compulsory) provided as standard with the circuit-breaker

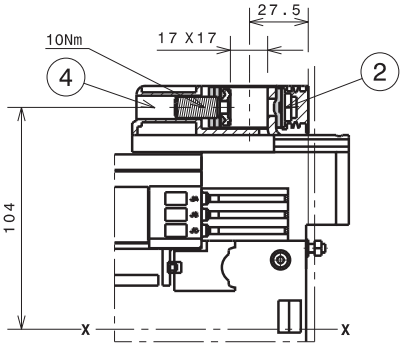

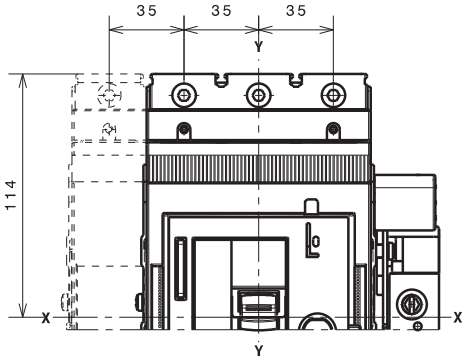

FIXING AT 50 mm

Terminals MC

Caption

(1) Multicable terminals

(3) High terminal covers with degree of protection IP40 (optional) provided

(4) Adaptor (compulsory) not provided

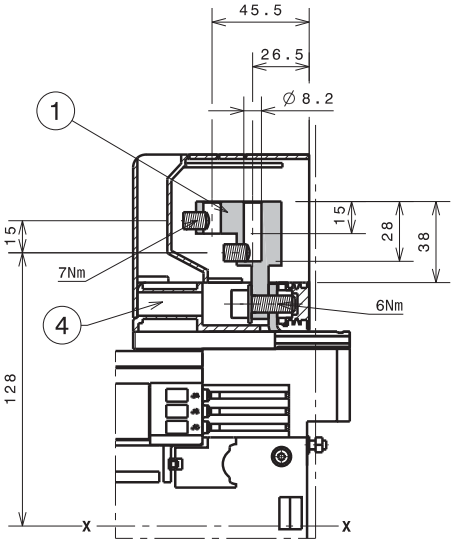

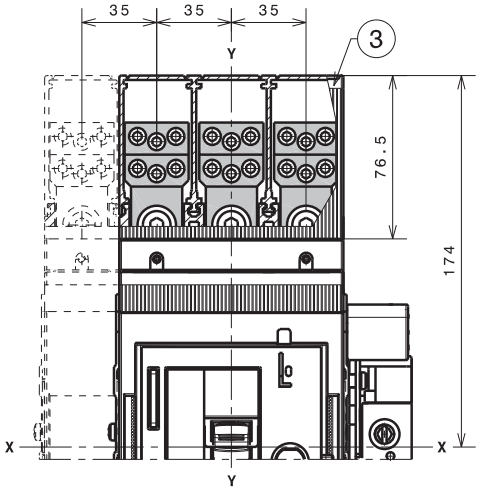

FIXING AT 50 mm

Terminals HR/VR

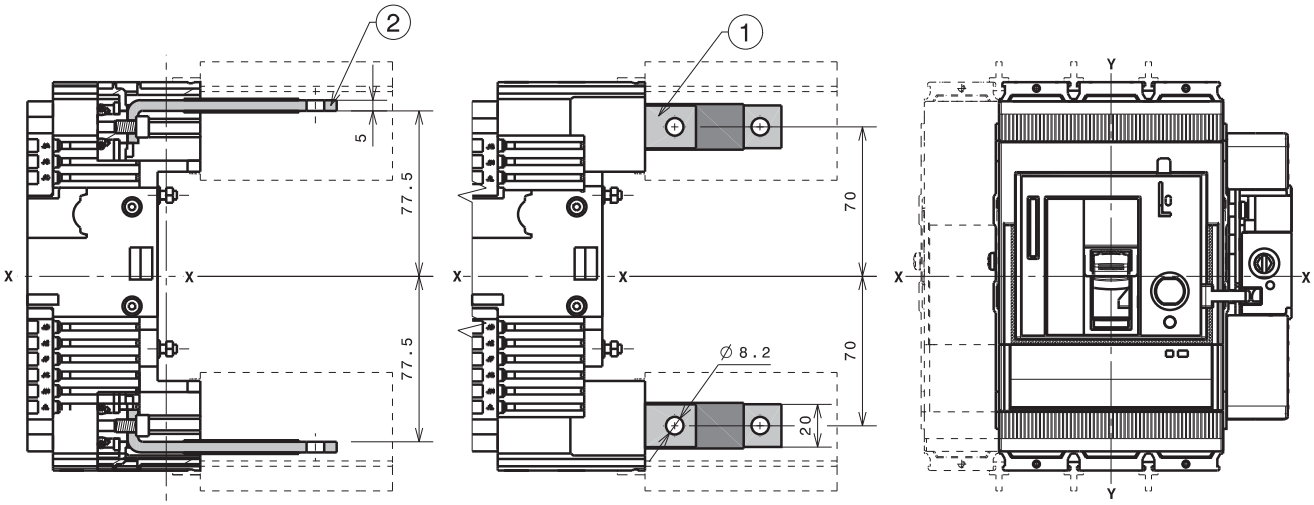

FIXING AT 50 mm

FIXING AT 50 mm

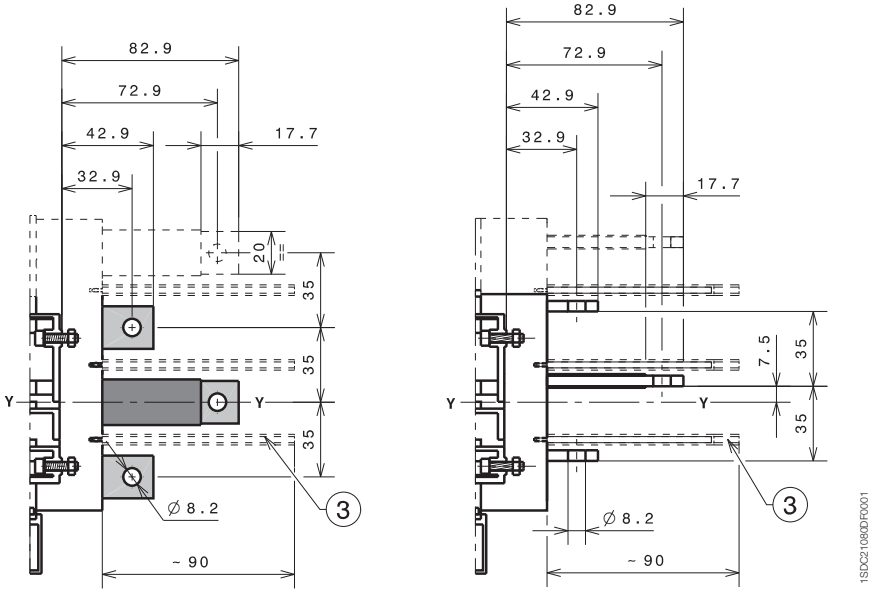

Caption

1. Rear vertical terminals
2. Rear horizontal terminals
3. 90mm insulating barriers between phases (compulsory) not provided

Front for lever operating mechanism (FLD)

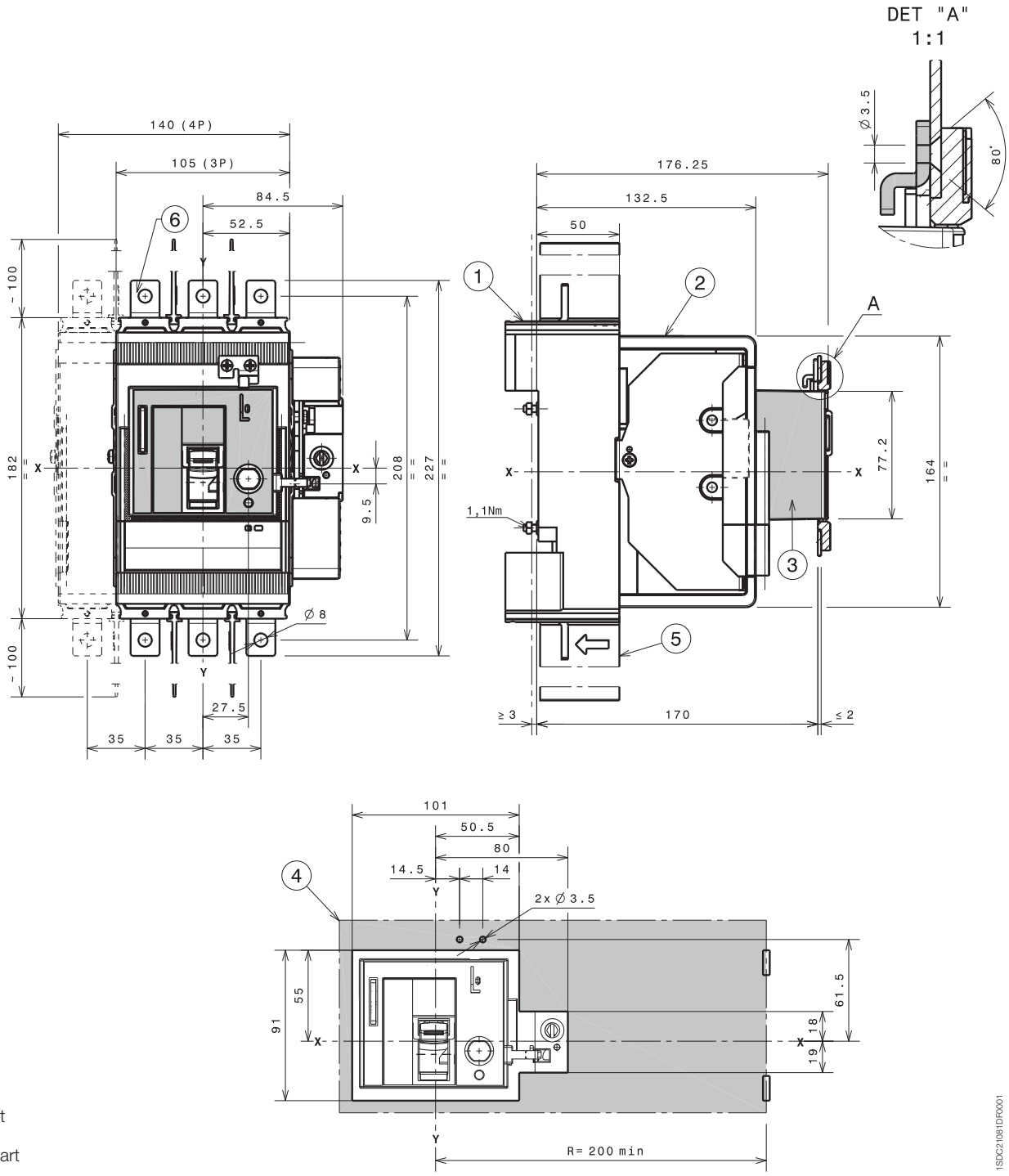

Caption

1. Fixed part
2. Moving part
3. Front for lever operating mechanism FLD
4. Drilling template of door with direct rotary handle and fixed flange
5. 100mm insulating barriers between phases (compulsory) provided
6. Extended terminals

Stored energy motor operator (MOE)

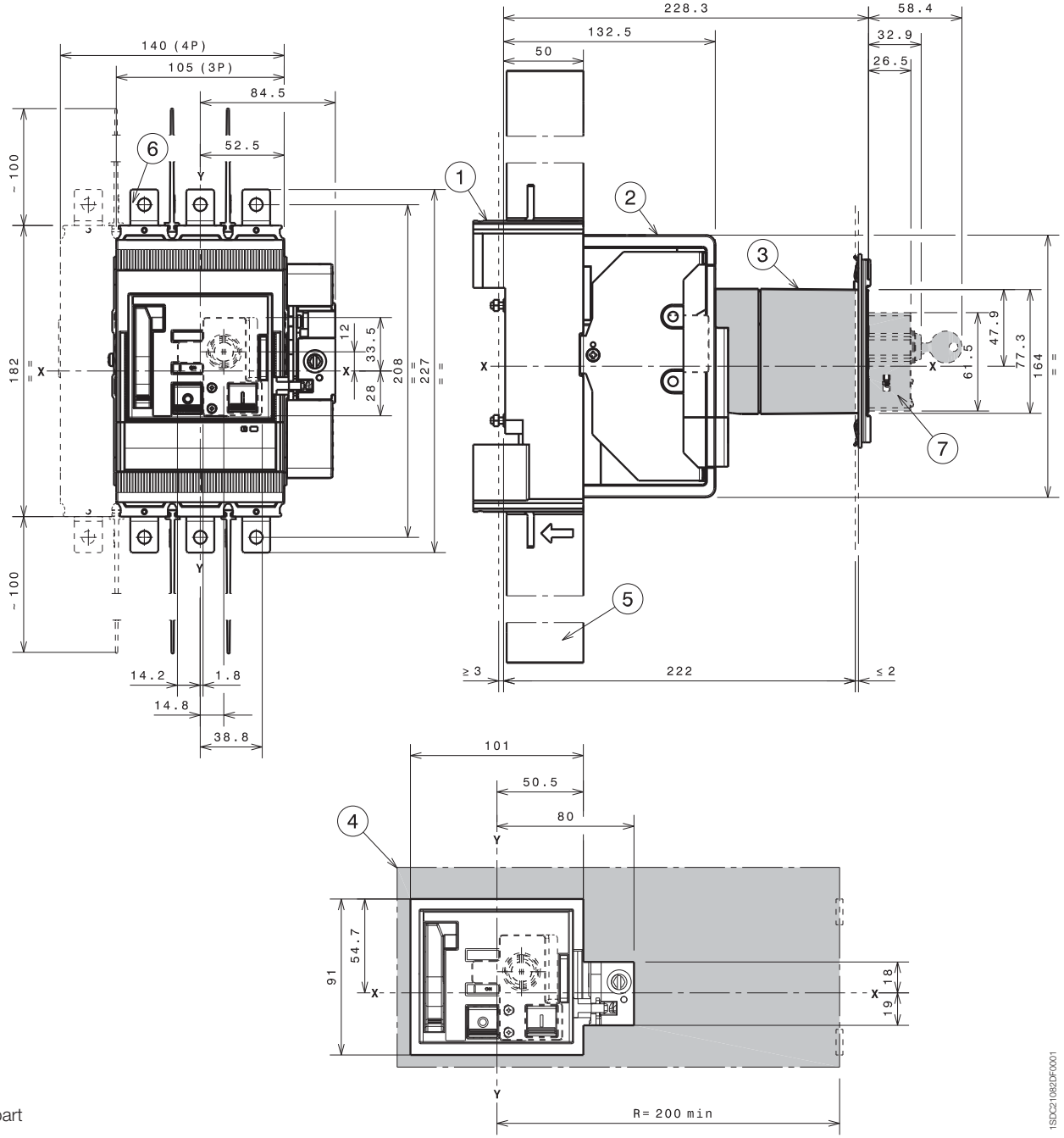

Caption

1. Fixed part
2. Moving part
3. Stored energy motor operator (MOE)
4. Drilling template of door with direct rotary handle and fixing flange
5. 100mm insulating barriers between phases (compulsory) provided
6. Extended terminals
7. Key lock optional

Overall dimensions

Tmax XT4 - Accessories for withdrawable circuit-breaker

Residual current RC Sel 4 poles

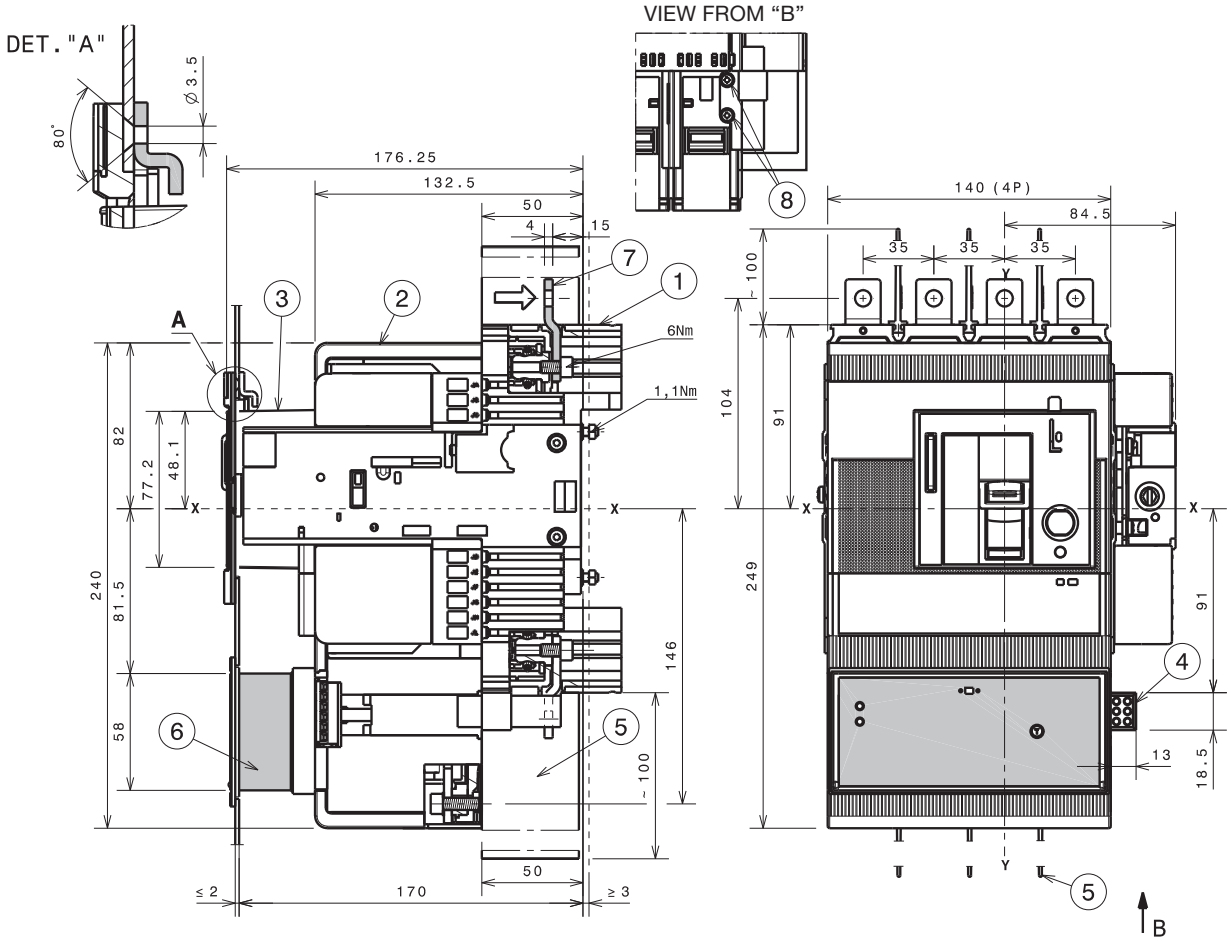

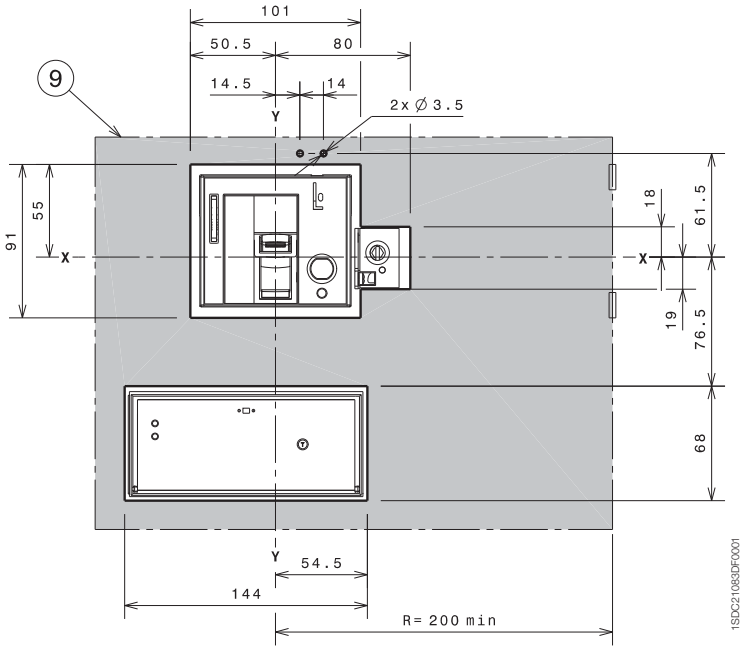

Caption

1. Fixed part
2. Moving part
3. Front for lever operating mechanism
4. Connector residual current (optional)
5. 100mm insulating barriers between phases (compulsory) provided
6. Residual current
7. Extended terminals
8. Fixing screws for fixed part of connector
9. Drilling template of door with direct rotary handle and fixed flange

Overall dimensions

Distances to be respected

Insulation distances for installation in metallic cubicle

Un≤440V	A (mm)	B (mm)	C (mm)
XT1	25	20	20
XT2	30	20	25
XT3	50	20	20
XT4	30	20	25

Un>440V	A (mm)	B (mm)	C (mm)
XT1	25	20	20
XT2	50	20	45
XT3	50	20	20
XT4	50	20	45

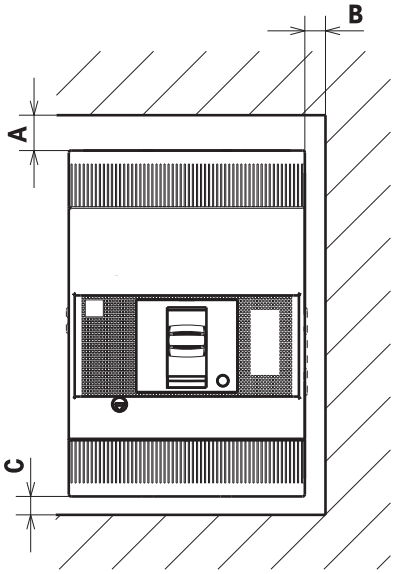

Minimum center distance between two circuit-breaker side-by-side

	Circuit-breaker width (mm)		Centre distance I (mm)	
	3 poles	4 poles	3 poles	4 poles
XT1	76	102	76	102
XT2	90	120	90	120
XT3	105	140	105	140
XT4	105	140	105	140

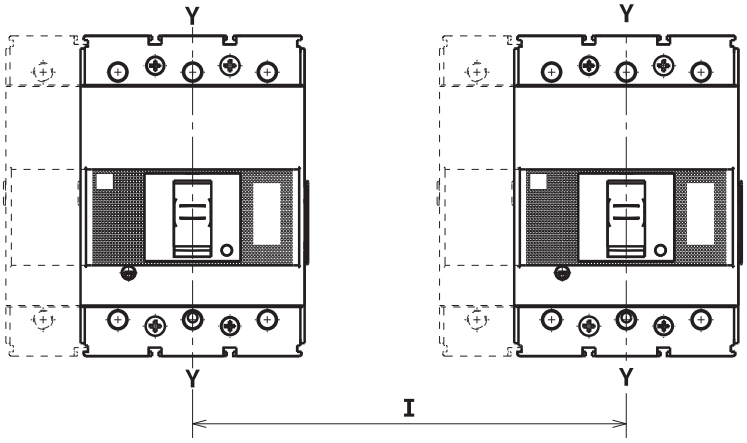

Minimum centre distance for superimposed circuit-breakers

	H (mm)
XT1	80
XT2	120
XT3	140
XT4	160

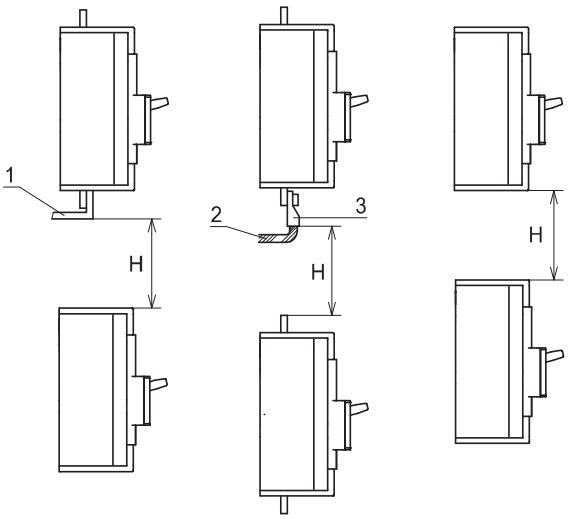

Caption

1. Connection - not insulated
2. Insulated cable
3. Cable terminal

Wiring Diagrams

Index

Information on how to read the diagrams **6**/2

Graphic symbols (IEC 60617 and CEI 3-14…3-26 Standards) **6**/3

Wiring Diagrams of the circuit-breakers **6**/4

Wiring Diagrams of the accessories **6**/8

Resetting instructions **6**/19

Wiring Diagrams

Information on how to read the diagrams

State of operation shown

The diagrams are shown in the following conditions:
- fixed version circuit-breaker, open;
- withdrawable or plug-in version circuit-breaker, open and connected;
- contactor for starting the motor open;
- circuits de-energised;
- trip units not tripped;
- motor operator with springs charged.

The diagram shows a circuit-breaker or a switch-disconnector in the withdrawable or plug-in version, but is also valid for fixed version circuit-breakers or switch-disconnectors.
For the fixed version circuit-breakers, the auxiliary circuits are headed at terminal box XV: connectors J.. and XB.., XC.., XD.. and XE.. are not supplied.
For the plug-in version circuit-breakers, the auxiliary circuits are headed at connectors XB.., XC.., XD.. and XE..: connectors J.. are not supplied.
For the withdrawable version circuit-breakers, the auxiliary circuits are headed at connectors J..: connectors XB.., XC.., XD.. and XE.. are not supplied.

Wiring Diagrams

Graphic symbols (IEC 60617 and CEI 3-14 …3-26 Standards)

Thermal effect	
Electromagnetic effect	
Timing	
Mechanical connection	
Manual mechanical operating mechanism (general case)	
Rotary handle operating mechanism	
Pushbutton operating mechanism	
Key operating mechanism	
Cam operating mechanism	
Ground (general symbol)	
Converter separated galvanically	
Conductors in shielded cable (example two conductors)	
Conductors with corded cables (example two conductors)	
Connection of conductors	
Terminal or clamp	
Socket and plug (female and male)	
Resistor (general symbol)	
Resistor dependent on the temperature	θ
Motor (general symbol)	M
Three-phase asynchronous motor, with short-circuited rotor (cage)	M 3 ~
Current transformer	
Current transformer with primary consisting of 4 passing conductors and with wound secondary, with socket	
Closing contact	
Opening contact	
Changeover contact with momentary break	
Closing position contact (limit switch)	
Opening position contact (limit switch)	
Changeover contact with momentary break (limit switch)	
Contactor (closing contact)	d
Power cut-off of switch-disconnector power with automatic opening	
Switch-disconnector	
Control coil (general symbol)	
Thermal trip unit	
Instantaneous overcurrent release	I ≫
Overcurrent release with short adjustable time delay characteristic	I ≫
Overcurrent release with short inverse adjustable time delay characteristic	I ≫
Overcurrent release with long inverse adjustable time delay characteristic	I >
Overcurrent release for earth fault with short inverse time characteristic	I ≫
Current relay for unbalance between phases	I >
Residual current release	Id
Relay for detecting lack of phase in a three-phase system	m<3
Relay for detecting blocked rotor by means of current measurement	n≈0 I>
Lamp, general symbol	
Motor with excitation in series	M
Brush	

Wiring Diagrams of the circuit-breakers

State of operation

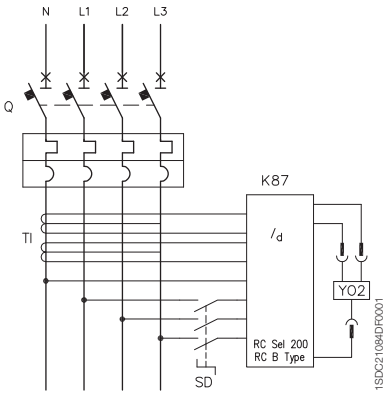

Four-pole circuit-breaker with thermomagnetic trip unit and RC Sel 200 or RC B type residual current release

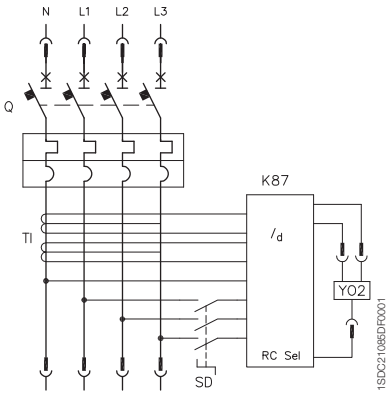

Four-pole circuit-breaker with thermomagnetic trip unit and RC Sel residual current release

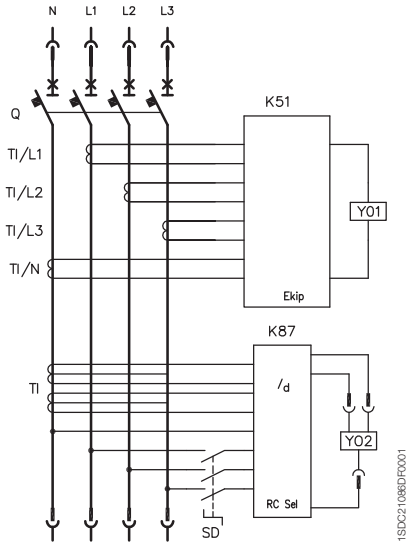

Four-pole circuit-breaker with electronic trip unit and RC Sel residual current release

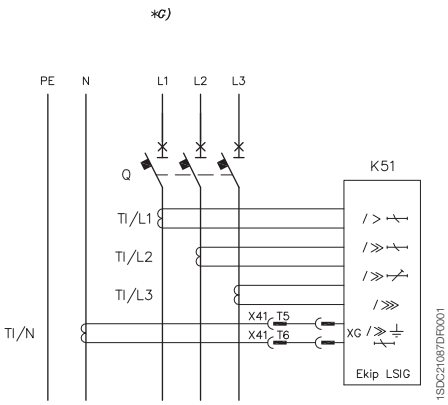

Three-pole fixed version circuit-breaker with current transformer on the neutral conductor outside the circuit-breaker

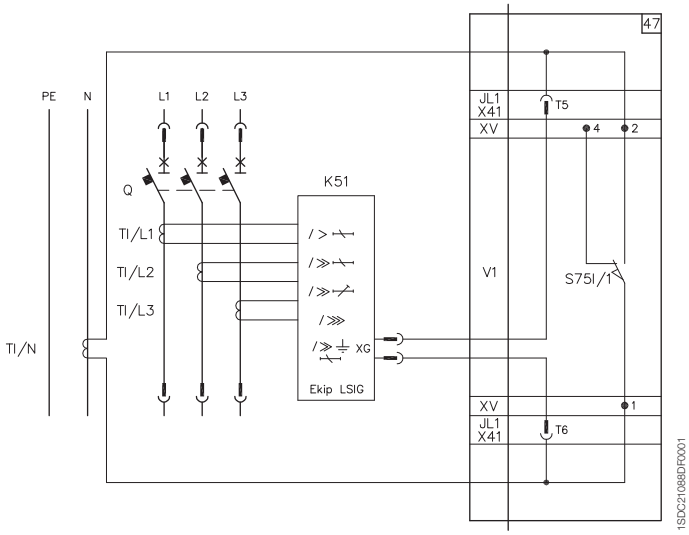

Diagram recommended for three-pole plug-in or withdrawable version circuit-breakers with current transformer on the neutral conductor outside the circuit-breaker

Description of Figures

Fig. 47 = Current transformer circuit on the neutral conductor outside the circuit-breaker (for plug-in or withdrawable version circuit-breaker).

Notes

G) In the case of a three-pole fixed version circuit-breaker with a current transformer on the neutral conductor outside the circuit-breaker, when you want to remove the circuit-breaker it is necessary to short-circuit the terminals of the TI/N transformer.

Caption

☐	=	Diagram figure number
*	=	See the note indicated by the letter
J..	=	Connectors for the auxiliary contacts of the withdrawable version circuit-breaker; extraction of the connectors takes place at the same time as that of the circuit-breaker.
K51	=	Electronic trip unit: – of overcurrent type Ekip LS/I, Ekip N-LS/I, Ekip LSI, Ekip LSIG – of motor protection type Ekip I, Ekip M-LIU, Ekip M-LRIU – of generator protection Ekip G-LSI
K87	=	Residual current release type RC Inst, RC Sel, RC Sel 200, RC B Type
Q	=	Main circuit-breaker
S75I/1..4	=	Contacts for electrical signalling of circuit-breaker in the connected position (only provided with plug-in or withdrawable version circuit-breakers)
S75S/1-2	=	Contacts for electrical signalling of circuit-breaker in the racked-out position (only provided with withdrawable version circuit-breakers)
SD	=	Power supply switch-disconnector of the residual current release type RC Inst, RC Sel, RC Sel 200 or RC B Type
TI	=	Toroidal current transformer
TI/L1	=	Current transformer placed on phase L1
TI/L2	=	Current transformer placed on phase L2
TI/L3	=	Current transformer placed on phase L3
TI/N	=	Current transformer placed on the neutral
V1	=	Circuit-breaker applications
X41	=	Circuit connector for external neutral
XG-XH	=	Electronic trip unit connectors
XV	=	Terminal boxes of the circuit-breaker applications
YO1	=	Opening solenoid of the overcurrent release
YO2	=	Opening solenoid of the residual current release

Wiring Diagrams of the circuit-breakers

State of operation

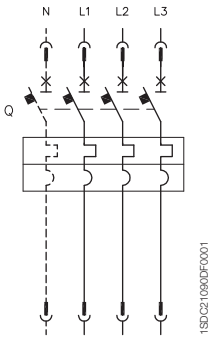

Three-pole or four-pole circuit-breaker with TMD, TMA or TMG thermomagnetic trip unit

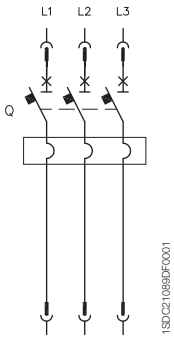

Three-pole circuit-breaker with MA magnetic trip unit

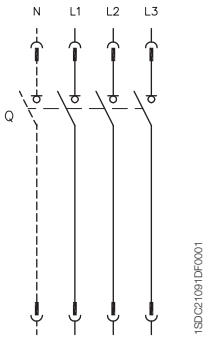

Three-pole or four-pole XT1D, XT3D or XT4D switch-disconnector

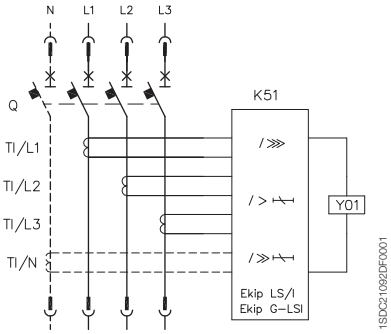

Three-pole or four-pole circuit-breaker with Ekip LS/I or Ekip G-LSI electronic trip unit

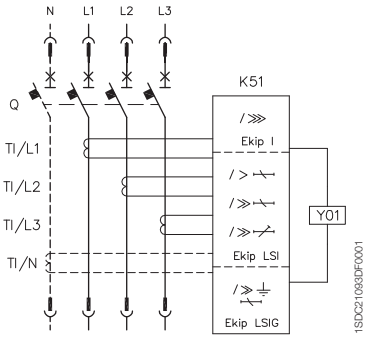

Three-pole or four-pole circuit-breaker with Ekip I, Ekip LSI or Ekip LSIG electronic trip unit

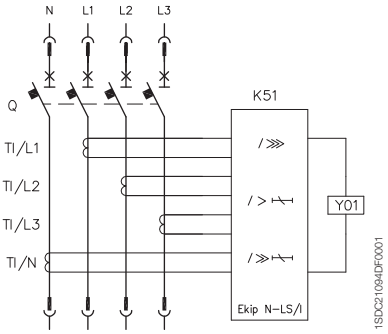

Four-pole circuit-breaker with Ekip N-LS/I electronic trip unit

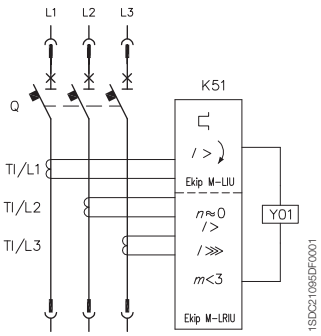

Three-pole circuit-breaker with Ekip M-LIU or Ekip M-LRIU electronic trip unit

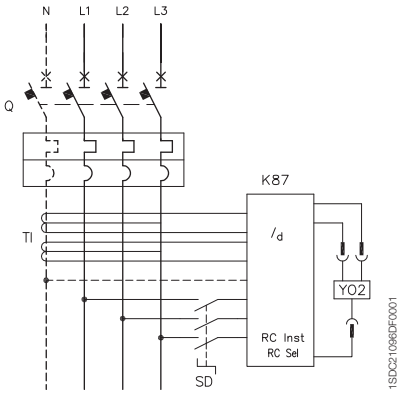

Three-pole or four-pole circuit-breaker with thermomagnetic trip unit and RC Inst or RC Sel residual current release

Caption

☐	=	Diagram figure number
*	=	See the note indicated by the letter
K51	=	Electronic trip unit: – of overcurrent type Ekip LS/I, Ekip N-LS/I, Ekip LSI, Ekip LSIG – of motor protection type Ekip I, Ekip M-LIU, Ekip M-LRIU – of generator protection type Ekip G-LSI
K87	=	Residual current release type RC Inst, RC Sel, RC Sel 200, RC B Type
Q	=	Main circuit-breaker
SD	=	Power supply switch-disconnector of the residual current release type RC Inst, RC Sel, RC Sel 200 or RC B Type
TI	=	Toroidal current transformer
TI/L1	=	Current transformer placed on phase L1
TI/L2	=	Current transformer placed on phase L2
TI/L3	=	Current transformer placed on phase L3
TI/N	=	Current transformer placed on the neutral
YO1	=	Opening solenoid of the overcurrent release
YO2	=	Opening solenoid of the residual current release

Wiring Diagrams of the accessories

Service releases

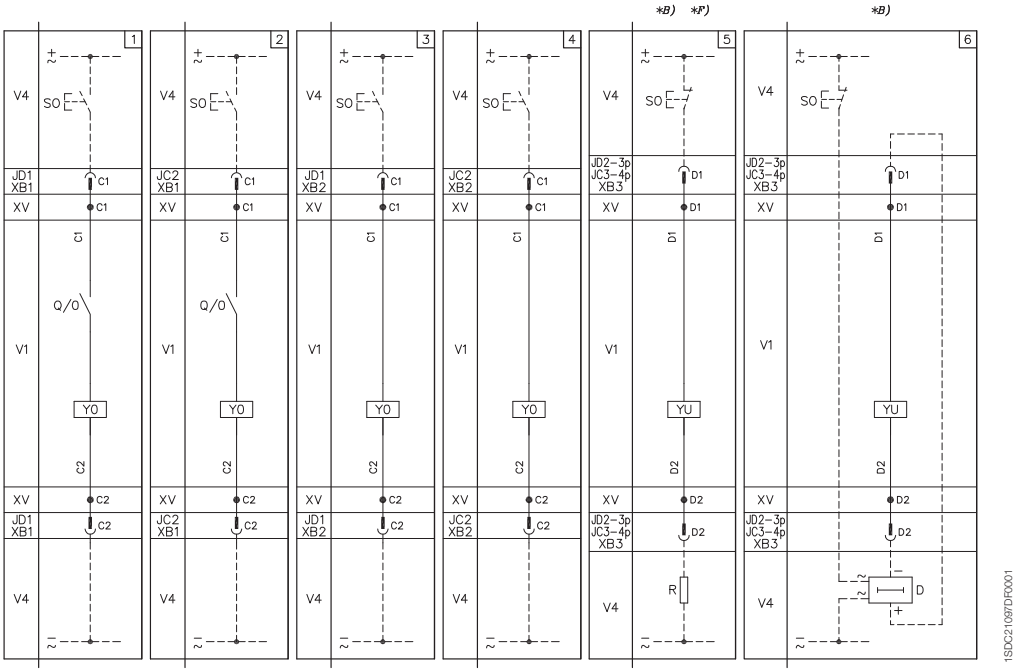

Description of Figures

Fig. 1 = Shunt opening release.
Fig. 2 = Supplementary shunt opening release (only for four-pole circuit-breakers).
Fig. 3 = Permanent shunt opening release.
Fig. 4 = Supplementary permanent shunt opening release (only for four-pole circuit-breakers).
Fig. 5 = Instantaneous undervoltage release (see Notes B and F).
Fig. 6 = Undervoltage release with electronic time delay device outside the circuit-breaker, see note B).

Notes

B) The undervoltage release is supplied for power supply branched on the supply side of the circuit-breaker or from an independent source: closing is only possible with the release energised (the lock on closing is made mechanically).

F) Additional external resistor for undervoltage supplied at 380/440V AC and 480/525V AC.

Caption

☐ = Diagram figure number
* = See the note indicated by the letter
D = Undervoltage release electronic time delay device (outside the circuit-breaker) (only for voltages up to 250V)
J.. = Connectors for the auxiliary contacts of the withdrawable version circuit-breaker; extraction of the connectors takes place at the same time as that of the circuit-breaker
Q/0..7 = Circuit-breaker auxiliary contacts
R = Resistor (see note F)
SO = Pushbutton or contact for opening the circuit-breaker
V1 = Circuit-breaker applications
V4 = Indicative apparatus and connections for control and signalling, outside the circuit-breaker
XB.. = Three-way connector for the plug-in version circuit-breaker auxiliary circuits
XV = Terminal boxes of the circuit-breaker applications
YO = Shunt opening release
YU = Undervoltage release (see note B)

Service releases

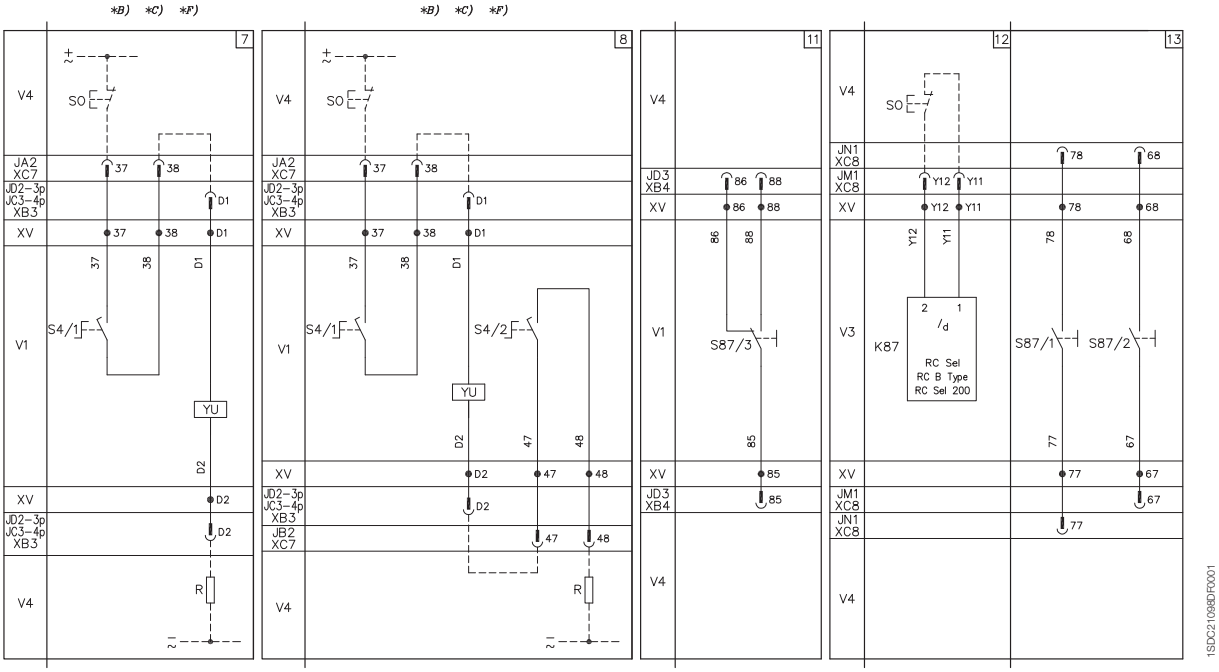

Description of Figures

Fig. 7 = Instantaneous undervoltage release in the version for machine tools with one contact in series (see notes B, C and F).

Fig. 8 = Instantaneous undervoltage release in the version for machine tools with two contacts in series (see Notes B, C and F).

Fig. 11 = One changeover contact for electrical signalling of circuit-breaker open due to tripping of the residual current release type RC Inst, RC Sel, RC B Type or RC Sel 200.

Fig. 12 = Residual current release circuits type RC Sel, RC B or RC Sel 200.

Fig. 13 = Two contacts for electrical signalling of residual current release pre-alarm and alarm type RC Sel, RC B or RC Sel 200.

Notes

B) The undervoltage release is supplied for power supply branched on the supply side of the circuit-breaker or from an independent source: closing is only possible with the release energised (the lock on closing is made mechanically).

C) Contacts S4/1 and S4/2 shown in figures 7-8 open the circuit with the circuit-breaker open and reclose it when a manual closing command is given by means of the rotary handle, in accordance with the Standards regarding machine tools (in any case closing does not take place if the undervoltage release is not supplied).

F) Additional external resistor for undervoltage supplied at 380/440V AC and 480/525V AC.

Caption

☐ = Diagram figure number
* = See the note indicated by the letter
J.. = Connectors for the auxiliary contacts of the withdrawable version circuit-breaker; extraction of the connectors takes place at the same time as that of the circuit-breaker
K87 = Residual current release type RC Inst, RC Sel, RC Sel 200, RC B Type
R = Resistor (see note F)
S4/1-2 = Early auxiliary contacts activated by the rotary handle of the circuit-breaker (see note C)
S87/1 = Contact for electrical signalling of pre-alarm of the residual current release type RC Sel, RC B or RC Sel 200
S87/2 = Contact for electrical signalling of alarm of the residual current release type RC Sel, RC B or RC Sel 200
S87/3 = Contact for electrical signalling of circuit-breaker open due to tripping of the residual current release type RC Sel, RC B or RC Sel 200
SO = Pushbutton or contact for opening the circuit-breaker
V1 = Circuit-breaker applications
V4 = Indicative apparatus and connections for control and signalling, outside the circuit-breaker
XB.. = Three-way connector for the plug-in version circuit-breaker auxiliary circuits
XC.. = Six-way connector for the plug-in version circuit-breaker auxiliary contacts
XV = Terminal boxes of the circuit-breaker applications
YU = Undervoltage release (see note B)

Wiring Diagrams of the accessories

Motor operator

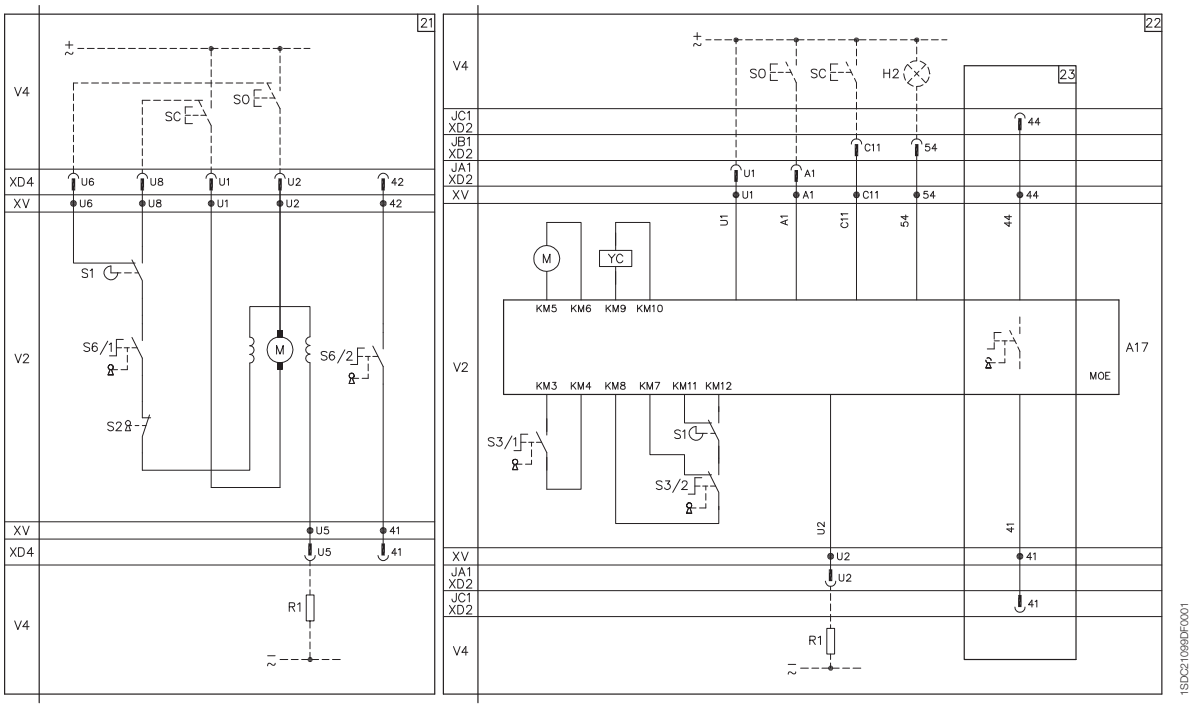

Description of Figures

Fig. 21 = Motor operator with direct action (MOD) (only for fixed or plug-in version circuit-breakers XT1 and XT3).
Fig. 22 = Motor operator with stored energy (MOE) (only for circuit-breakers XT2 and XT4).
Fig. 23 = A contact for electrical signalling of stored energy motor operator that can be operated remotely.

Caption

☐	=	Diagram figure number
*	=	See the note indicated by the letter
A17	=	Actuator unit type MOE for the stored energy motor operator
H2	=	Signalling lamp for stored energy motor operator blocked
J..	=	Connectors for the auxiliary contacts of the withdrawable version circuit-breaker; extraction of the connectors takes place at the same time as that of the circuit-breaker
M	=	Motor with excitation in series for opening and closing the circuit-breaker (fig. 21)
M	=	Motor for opening the circuit-breaker and spring charging for closing the circuit-breaker (fig. 22)
M1	=	Three-phase asynchronous motor
R1	=	Motor thermistor
S1	=	Contact controlled by the cam of the motor operator
S2	=	Contact controlled by the key lock of the motor operator with direct action
S3/1-2	=	Contacts controlled by the Auto/Manual selector and key lock of the stored energy motor operator
S4	=	Contact controlled by the cam of the motor operator with direct action
S6/1-2	=	Contacts controlled by the Auto/Manual selector of the motor operator with direct action
SC	=	Pushbutton or contact for closing the circuit-breaker
SO	=	Pushbutton or contact for opening the circuit-breaker
V2	=	Motor operator applications
V4	=	Indicative apparatus and connections for control and signalling, outside the circuit-breaker
XD..	=	Nine-way connector for the auxiliary circuits of the plug-in version circuit-breaker
XV	=	Terminal boxes of the circuit-breaker applications
YC	=	Shunt closing release of the stored energy motor operator

Signalling contacts

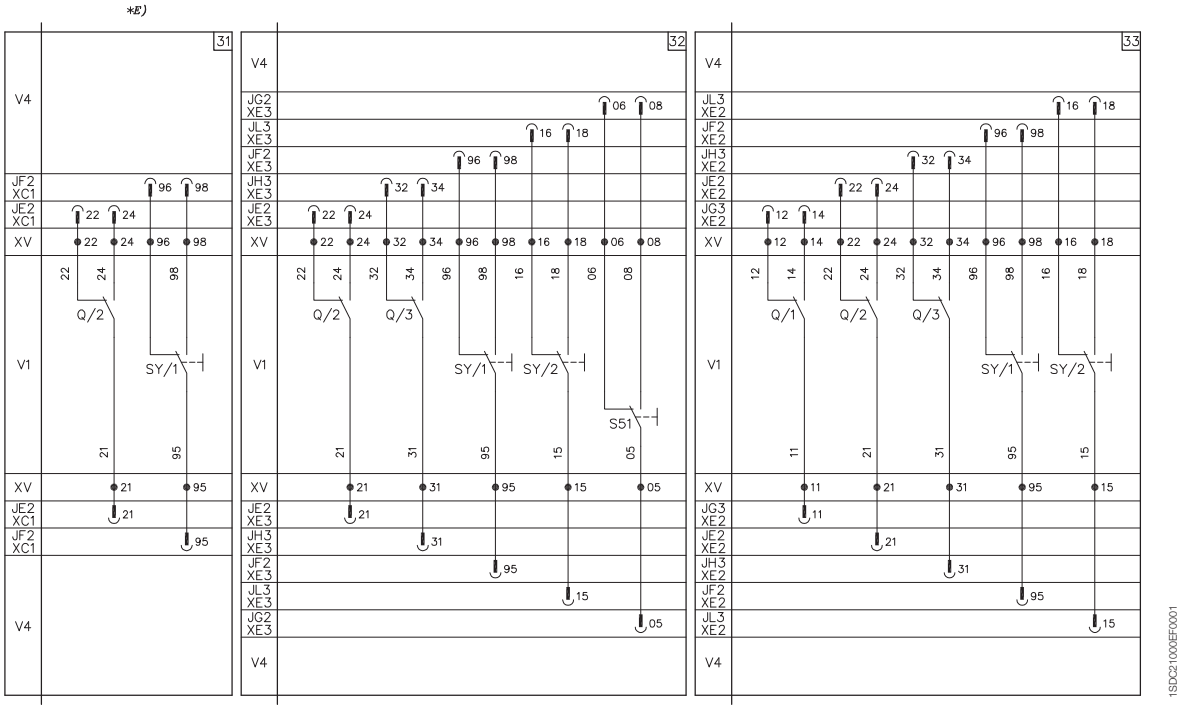

Description of Figures

Fig. 31 = One changeover contact for electrical signalling of circuit-breaker open or closed and one changeover contact for electrical signalling of circuit-breaker open due to tripping of the magnetic, thermomagnetic or electronic trip units, YO, YO1, YO2, YU (tripped position) (only for voltages up to 250V) (see note E).

Fig. 32 = Two changeover contacts for electrical signalling of circuit-breaker open or closed, two changeover contacts for electrical signalling of circuit-breaker open due to tripping of the magnetic, thermomagnetic or electronic trip units, YO, YO1, YO2, YU (tripped position) and one changeover contact for electrical signalling of circuit-breaker open due to tripping of the thermomagnetic or electronic trip unit (only for voltages up to 250V).

Fig. 33 = Three changeover contacts for electrical signalling of circuit-breaker open or closed and two changeover contacts for electrical signalling of circuit-breaker open due to tripping of the magnetic, thermomagnetic or electronic trip units, YO, YO1, YO2, YU (tripped position) (only for voltages up to 250V).

Notes

E) The 24V auxiliary power supply unit of fig. 48 must necessarily be installed in the circuit-breaker seats marked SY/1 and Q/2. Therefore, should you want to install the unit in fig. 48 and the contacts in fig. 31 at the same time, the contacts of fig. 31 must be installed in the adjacent slots; that is, contact SY/1 in the slot marked SY/2 and contact Q/2 in the slot marked Q/1.

Caption

☐ = Diagram figure number
* = See the note indicated by the letter
J.. = Connectors for the auxiliary contacts of the withdrawable version circuit-breaker; extraction of the connectors takes place at the same time as that of the circuit-breaker
Q/0..3 = Circuit-breaker auxiliary contacts
S51 = Contact for electrical signalling of circuit-breaker open due to tripping of the thermomagnetic or electronic trip unit
SY/1..2 = Contacts for electrical signalling of circuit-breaker open due to tripping of the thermomagnetic trip units, YO, YO1, YO2, YU (tripped position)
V1 = Circuit-breaker applications
V4 = Indicative apparatus and connections for control and signalling, outside the circuit-breaker
XC.. = Six-way connector for the plug-in version circuit-breaker auxiliary contacts
XD.. = Nine-way connector for the auxiliary circuits of the plug-in version circuit-breaker
XE.. = Fifteen-way connector for the auxiliary circuits of the plug-in version circuit-breaker
XV = Terminal boxes of the circuit-breaker applications

Wiring Diagrams of the accessories

Signalling contacts

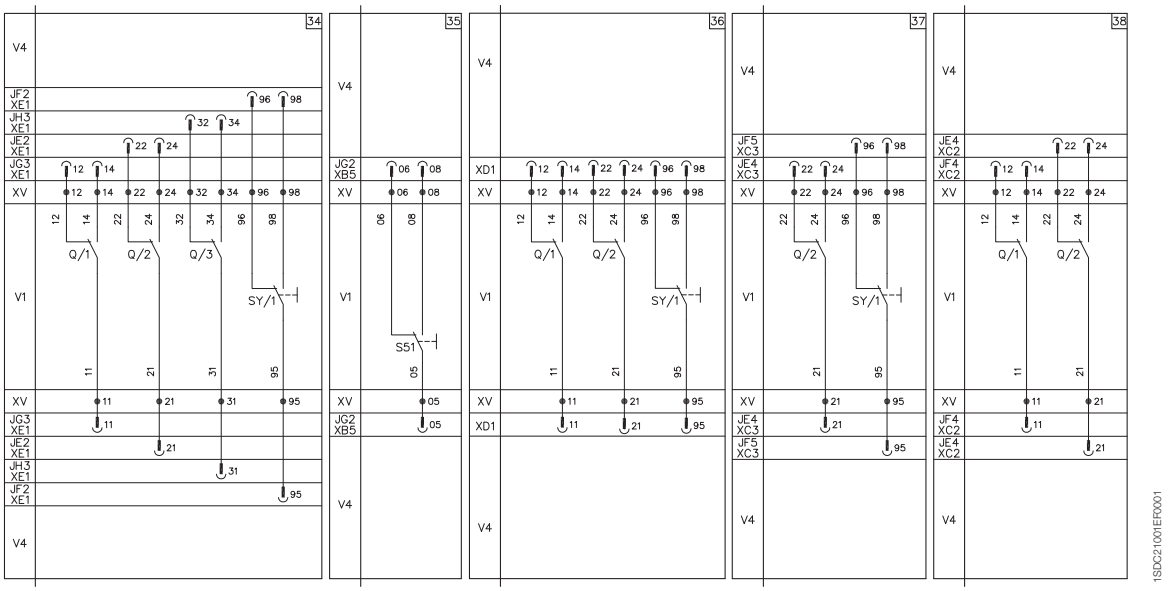

Description of Figures

Fig. 34 = Three changeover contacts for electrical signalling of circuit-breaker open and one changeover contact for electrical signalling of circuit-breaker open due to tripping of the magnetic, thermomagnetic or electronic trip units, YO, YO1, YO2, YU (tripped position) (only for voltages up to 250V).

Fig. 35 = One changeover contact for electrical signalling of circuit-breaker open due to tripping of the thermomagnetic electronic trip unit (only for voltages up to 250V).

Fig. 36 = Two changeover contacts for electrical signalling of circuit-breaker open or closed and one changeover contact for electrical signalling of circuit-breaker open due to tripping of the magnetic, thermomagnetic or electronic trip units, YO, YO1, YO2, YU (tripped position) (only for voltages up to 250V).

Fig. 37 = One changeover contact for electrical signalling of circuit-breaker open or closed and one changeover contact for electrical signalling of circuit-breaker open due to tripping of the magnetic, thermomagnetic or electronic trip units, YO, YO1, YO2, YU (tripped position) (only for voltage up to 400V).

Fig. 38 = Two changeover contacts for electrical signalling of circuit-breaker open or closed (only for voltage up to 400V).

Caption

☐	=	Diagram figure number
*	=	See the note indicated by the letter
J..	=	Connectors for the auxiliary contacts of the withdrawable version circuit-breaker; extraction of the connectors takes place at the same time as that of the circuit-breaker
Q/0..3	=	Circuit-breaker auxiliary contacts
S51	=	Contact for electrical signalling of circuit-breaker open due to tripping of the thermomagnetic or electronic trip unit
SY/1	=	Contacts for electrical signalling of circuit-breaker open due to tripping of the thermomagnetic trip units, YO, YO1, YO2, YU (tripped position)
V1	=	Circuit-breaker applications
V4	=	Indicative apparatus and connections for control and signalling, outside the circuit-breaker
XB..	=	Three-way connector for the plug-in version circuit-breaker auxiliary circuits
XC..	=	Six-way connector for the plug-in version circuit-breaker auxiliary contacts
XD..	=	Nine-way connector for the auxiliary circuits of the plug-in version circuit-breaker
XE..	=	Fifteen-way connector for the auxiliary circuits of the plug-in version circuit-breaker
XV	=	Terminal boxes of the circuit-breaker applications

Signalling contacts

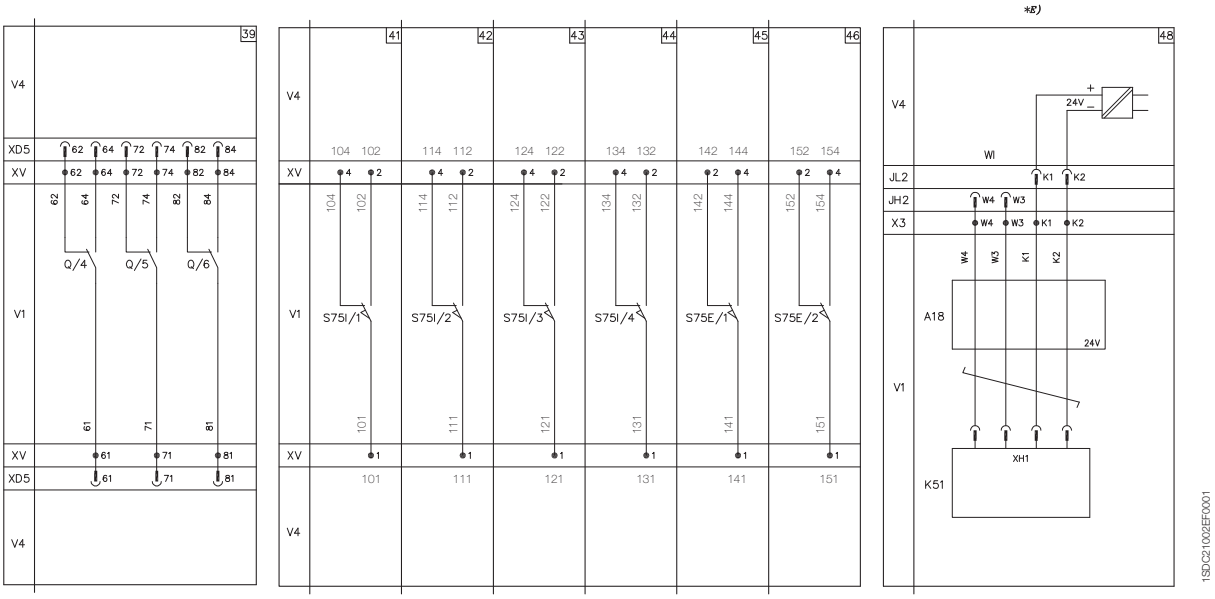

Description of Figures

Fig. 39 = Three supplementary changeover contacts for electrical signalling of circuit-breaker open or closed (only for fixed or plug-in version circuit-breakers).

Fig. 41 = First changeover position contact of the circuit-breaker, for electrical signalling of connected (only for plug-in or withdrawable version circuit-breakers).

Fig. 42 = Second changeover position contact of the circuit-breaker, for electrical signalling of connected (only for plug-in or withdrawable version circuit-breakers).

Fig. 43 = Third changeover position contact of the circuit-breaker, for electrical signalling of connected(only for plug-in or withdrawable version circuit-breakers).

Fig. 44 = Fourth changeover position contact of the circuit-breaker, for electrical signalling of connected (only for plug-in or withdrawable version circuit-breakers).

Fig. 45 = First changeover position contact of the circuit-breaker, for electrical signalling of isolated (only for withdrawable version circuit-breakers).

Fig. 46 = Second changeover position contact of the circuit-breaker, for electrical signalling of isolated (only for withdrawable version circuit-breakers).

Fig. 48 = Auxiliary circuits of the 24V auxiliary power supply unit (see note E).

Notes

E) The 24V auxiliary power supply unit of fig. 48 must necessarily be installed in the circuit-breaker seats marked SY/1 and Q/2. Therefore, should you want to install the unit in fig. 48 and the contacts in fig. 31 at the same time, the contacts of fig. 31 must be installed in the adjacent slots; that is, contact SY/1 in the slot marked SY/2 and contact Q/2 in the slot marked Q/1.

Caption

☐ = Diagram figure number

* = See the note indicated by the letter

J.. = Connectors for the auxiliary contacts of the withdrawable version circuit-breaker; extraction of the connectors takes place at the same time as that of the circuit-breaker

K51 = Electronic trip unit:
- of overcurrent type Ekip LS/I, Ekip N-LS/I, Ekip LSI, Ekip LSIG
- of motor protection type Ekip I, Ekip M-I, Ekip M-LIU, Ekip M-LRIU
- of generator protection type Ekip G-LSI

Q/0..7 = Circuit-breaker auxiliary contacts

S75I/1..4 = Contacts for electrical signalling of circuit-breaker in connected position (only provided with plug-in or withdrawable version circuit-breakers)

S75E/1-2 = Contacts for electrical signalling of circuit-breaker in racked-out position (only provided with withdrawable version circuit-breakers)

V1 = Circuit-breaker applications

V4 = Indicative apparatus and connections for control and signalling, outside the circuit-breaker

WI = Serial interface with the trip unit accessories

X3 = Connector of the circuit for the 24V auxiliary power supply unit

XD.. = Nine-way connector for the auxiliary circuits of the plug-in version circuit-breaker

XV = Terminal boxes of the circuit-breaker applications

A18 = 24V auxiliary power supply unit (See note E)

XH1 = Electronic trip unit contacts

Wiring Diagrams of the accessories

Electronic trip unit Ekip LSI, Ekip LSIG, Ekip M-LRIU connected with Ekip Display or Ekip LED Meter

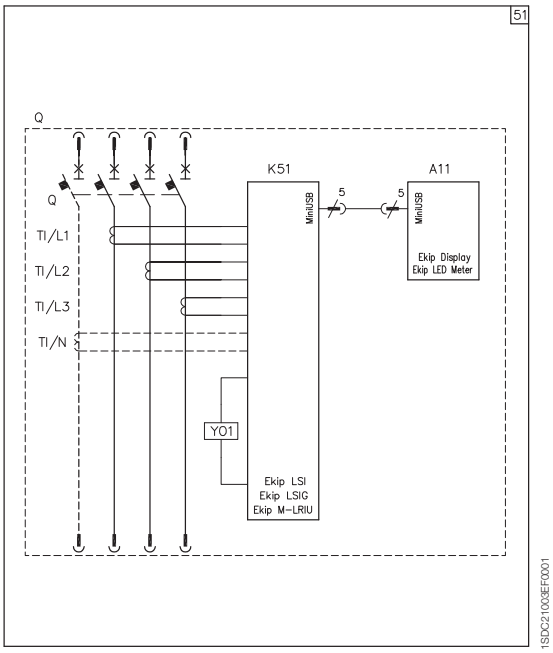

Description of Figures

Fig. 51 = Auxiliary circuits of the electronic trip unit type Ekip LSI, Ekip LSIG or Ekip MLRIU connected to display unit type Ekip Display (display) or Ekip LED Meter (current display).

Caption

☐	=	Diagram figure number
A11	=	Display unit type Ekip Display (display) or Ekip LED Meter (current display)
K51	=	Electronic trip unit: – of overcurrent type Ekip LSI, Ekip LSIG – of motor protection type Ekip M-LRIU
Q	=	Main circuit-breaker
TI/L1	=	Current transformer placed on phase L1
TI/L2	=	Current transformer placed on phase L2
TI/L3	=	Current transformer placed on phase L3
TI/N	=	Current transformer placed on the neutral
YO1	=	Opening solenoid of the overcurrent release

Electronic trip unit Ekip LSI, Ekip LSIG or Ekip M-LRIU connected to interface unit Ekip Com and with signalling unit LD030 DO

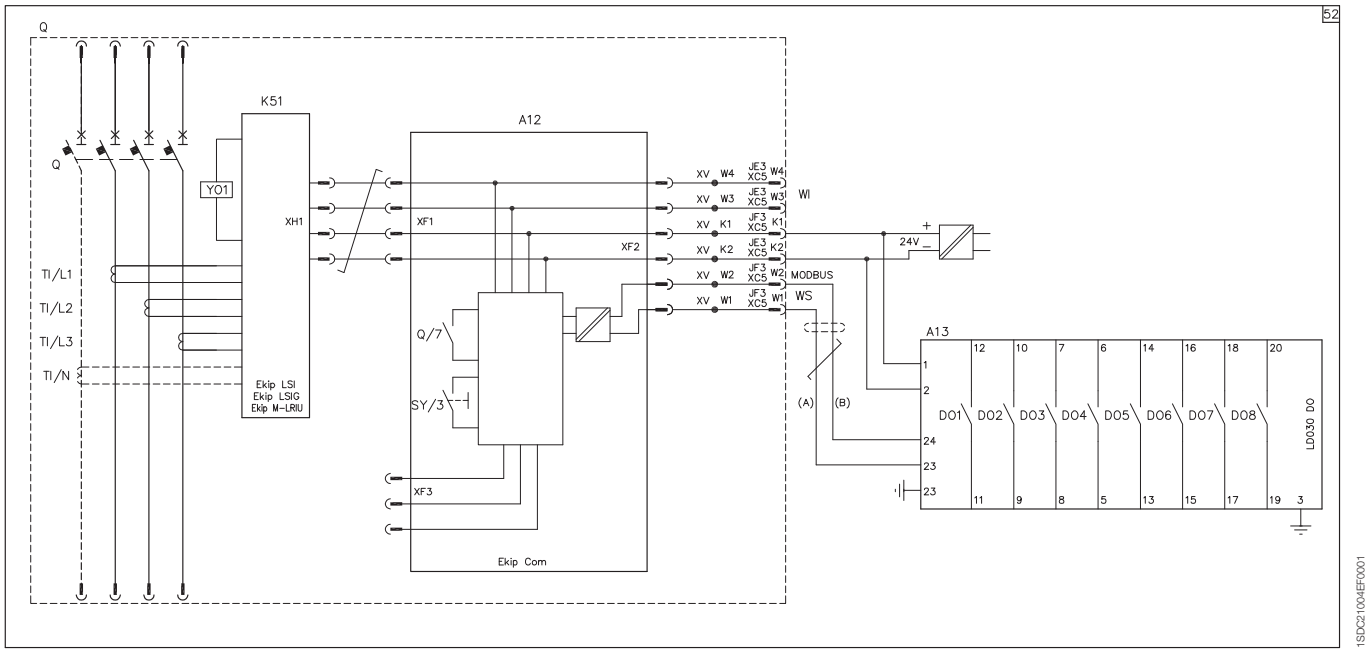

Description of Figures

Fig. 52 = Auxiliary circuits of the electronic trip unit type Ekip LSI, Ekip LSIG or Ekip M-LRIU connected to interface unit type Ekip Com and with signalling unit type LD030 DO.

Caption

☐	=	Diagram figure number
A12	=	Interface unit type Ekip Com (with MODBUS serial communication)
A13	=	Signalling unit type LD030 DO
K51	=	Electronic trip unit: – of overcurrent type Ekip LSI, Ekip LSIG – of motor protection type Ekip M-LRIU
Q	=	Main circuit-breaker
Q/0..7	=	Circuit-breaker auxiliary contacts
SY/1..3	=	Contacts for electrical signalling of circuit-breaker open due to tripping of the thermomagnetic trip units, YO, YO1, YO2, YU (tripped position)
TI/L1	=	Current transformer placed on phase L1
TI/L2	=	Current transformer placed on phase L2
TI/L3	=	Current transformer placed on phase L3
TI/N	=	Current transformer placed on the neutral
WI	=	Serial interface with the trip unit accessories
WS	=	Serial interface with the control system (MODBUS EIA RS485 interface)
XF	=	Connector of the Interface unit type Ekip Com
XG-XH	=	Electronic trip unit connectors
XV	=	Terminal boxes of the circuit-breaker applications
YO1	=	Opening solenoid of the overcurrent release

Wiring Diagrams of the accessories

Electronic trip unit Ekip LSI, Ekip LSIG or Ekip M-LRIU connected to interface unit Ekip Com and with actuator unit type MOE-E for the stored energy motor operator

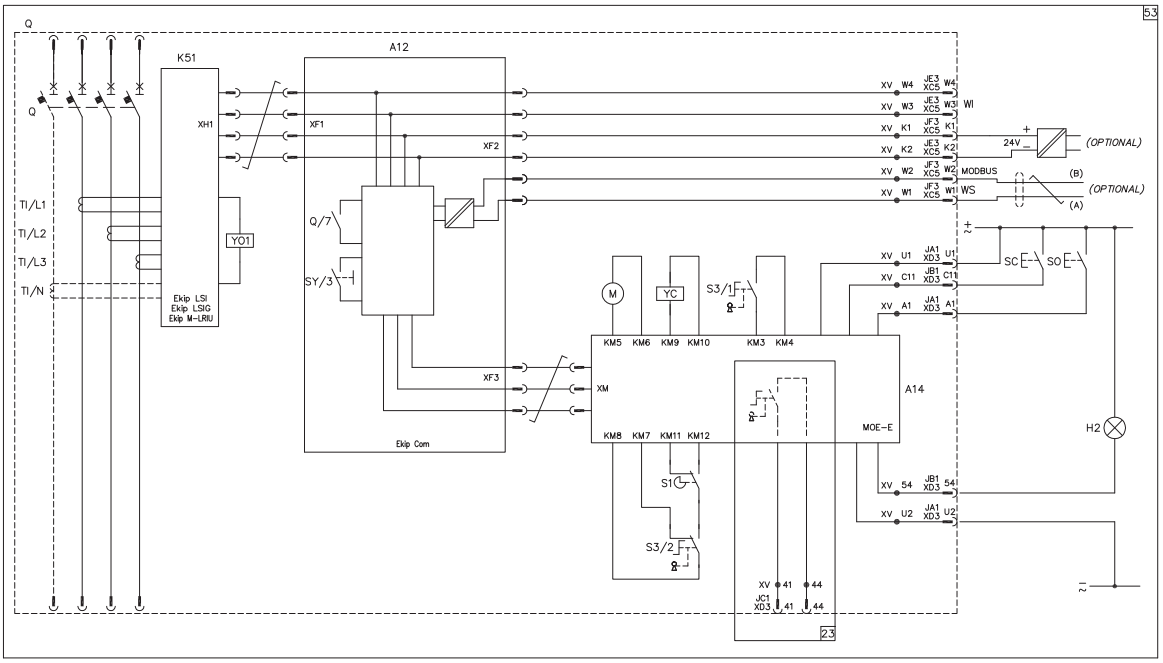

Description of Figures

Fig. 23 = One Contact for electrical signalling of stored energy motor operator that can be operated remotely.
Fig. 53 = Auxiliary circuits of the electronic trip unit type Ekip LSI, Ekip LSIG or Ekip M-LRIU connected to interface unit type Ekip Com and with actuator unit type MOE-E for the stored energy motor operator.

Caption

☐	=	Diagram figure number
A12	=	Interface unit type Ekip Com (with MODBUS serial communication)
A14	=	Actuator unit type MOE-E for the stored energy motor operator
H2	=	Signalling lamp for blocked stored energy motor operator
J..	=	Connectors for the auxiliary contacts of the withdrawable version circuit-breaker; extraction of the connectors takes place at the same time as that of the circuit-breaker
K51	=	Electronic trip unit: – of overcurrent type Ekip LSI, Ekip LSIG – of motor protection type Ekip M-LRIU
M	=	Motor with excitation in series for opening and closing the circuit-breaker (fig. 21)
Q	=	Main circuit-breaker
Q/0..7	=	Circuit-breaker auxiliary contacts
S1	=	Contact controlled by the cam of the motor operator
S3/1-2	=	Contacts controlled by the Auto/Manual selector and key lock of the stored energy motor operator
SC	=	Pushbutton or contact for closing the circuit-breaker
SO	=	Pushbutton or contact for opening the circuit-breaker
SY/1..3	=	Contacts for electrical signalling of circuit-breaker open due to tripping of the thermomagnetic trip units, YO, YO1, YO2, YU (tripped position)
TI	=	Toroidal current transformer
TI/L1	=	Current transformer placed on phase L1
TI/L2	=	Current transformer placed on phase L2
TI/L3	=	Current transformer placed on phase L3
TI/N	=	Current transformer placed on the neutral
WI	=	Serial interface with the trip unit accessories
WS	=	Serial interface with the control system (MODBUS EIA RS485 interface)
XC..	=	Six-way connector for the plug-in version circuit-breaker auxiliary contacts
XD..	=	Nine-way connector for the auxiliary circuits of the plug-in version circuit-breaker
XF	=	Connector of the Interface unit type Ekip Com
XG-XH	=	Electronic trip unit connectors
XV	=	Terminal boxes of the circuit-breaker applications
YC	=	Shunt closing release of the stored energy motor operator
YO1	=	Opening solenoid of the overcurrent release

Auxiliary circuits of the electronic trip unit Ekip M-LRIU connected to the contactor control unit for starting the motor PR212/CI (the circuit to the motor thermistor is optional)

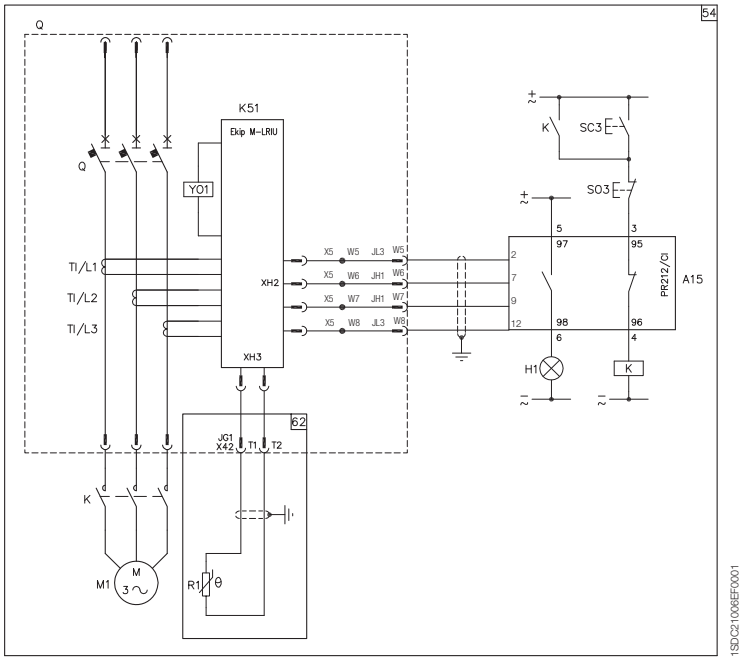

Description of Figures

Fig. 54 = Auxiliary circuits of the electronic trip unit type Ekip M-LRIU connected to the contactor control unit for starting the motor type PR212/CI (the circuit to the motor thermistor is optional).

Fig. 62 = Motor thermistor circuit.

Caption

☐	=	Diagram figure number
A15	=	Contactor control unit for starting the motor type PR212/CI
H1	=	Signalling lamp
J..	=	Connectors for the auxiliary contacts of the withdrawable version circuit-breaker; extraction of the connectors takes place at the same time as that of the circuit-breaker
K	=	Contactor for starting the motor
K51	=	Electronic trip unit Ekip M-LRIU
M1	=	Three-phase asynchronous motor
Q	=	Main circuit-breaker
R1	=	Motor thermistor
SC3	=	Pushbutton for starting the motor
SO3	=	Pushbutton for stopping the motor
TI/L1	=	Current transformer placed on phase L1
TI/L2	=	Current transformer placed on phase L2
TI/L3	=	Current transformer placed on phase L3
X42	=	Circuit connector for the motor thermistor
X5	=	Circuit connector towards PR212/CI unit
XG-XH	=	Electronic trip unit connectors
YO1	=	Opening solenoid of the overcurrent release

Electronic trip unit Ekip M-LRIU connected to the contactor control unit for starting the motor PR212/CI and with ABB AF series contactor (the circuit to the motor thermistor is optional)

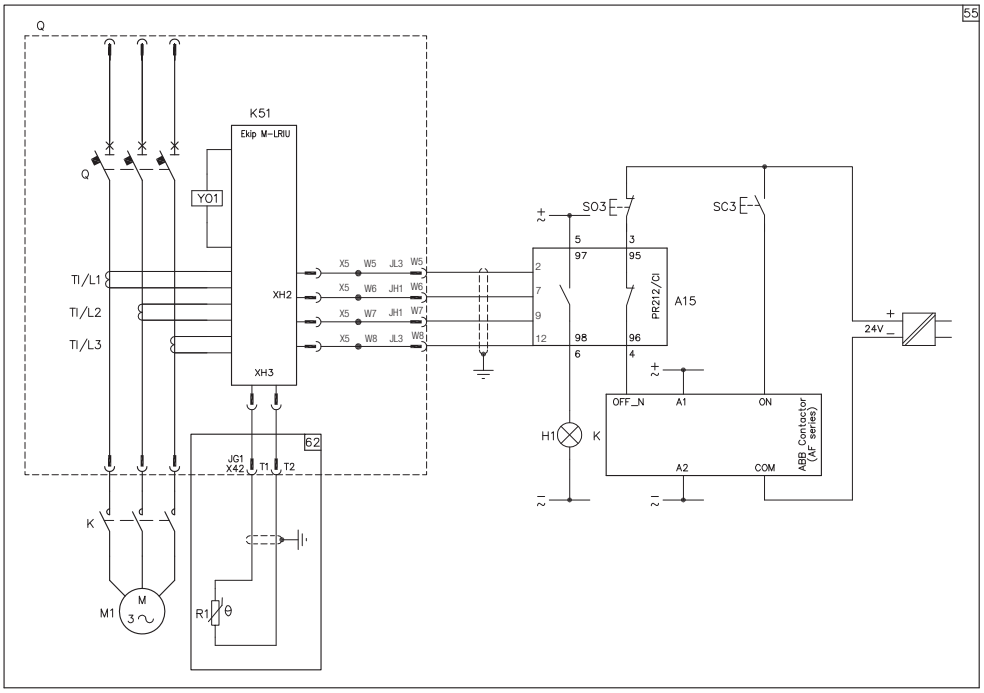

Description of Figures

Fig. 55 = Auxiliary circuits of the electronic trip unit type Ekip M-LRIU connected to the contactor control unit for starting the motor type PR212/CI and with ABB AF series contactor (the circuit to the motor thermistor is optional).

Fig. 62 = Motor thermistor circuit.

Caption

☐	=	Diagram figure number
A15	=	Contactor control unit for starting the motor type PR212/CI
H1	=	Signalling lamp
J..	=	Connectors for the auxiliary contacts of the withdrawable version circuit-breaker; extraction of the connectors takes place at the same time as that of the circuit-breaker
K	=	Contactor for starting the motor
K51	=	Electronic trip unit Ekip M-LRIU
M1	=	Three-phase asynchronous motor
Q	=	Main circuit-breaker
R1	=	Motor thermistor
SC3	=	Pushbutton for starting the motor
SO3	=	Pushbutton for stopping the motor
TI/L1	=	Current transformer placed on phase L1
TI/L2	=	Current transformer placed on phase L2
TI/L3	=	Current transformer placed on phase L3
X42	=	Circuit connector for the motor thermistor
X5	=	Circuit connector towards PR212/CI unit
XG-XH	=	Electronic trip unit connectors
YO1	=	Opening solenoid of the overcurrent release

Resetting instructions

Instructions for resetting the circuit-breaker following release tripping

Selection of the type of circuit-breaker resetting depends on design requirements and on service conditions.
Resetting can take place following tripping of the following releases:
– overcurrent;
– undervoltage;
– shunt opening.

The following three possibilities are suggested (see diagrams below):

1. **Only manual resetting**
   To be wired (by the customer): contact SO1, contact SY/1 and the auxiliary relay KO (only for MOD).
   Opening is prevented until the circuit-breaker is in the tripped position.
   To reset the circuit-breaker it is necessary to activate the special lever on the front of the motor until the circuit-breaker goes into the open position.
2. **Electrical resetting making the operator responsible**
   To be wired (by the customer): contact SO1, SO2, contact SY/1 and the auxiliary relay KO (only for MOD).
   Opening is allows by means of contact S02, which must be placed in custody and can only be used if the information the person in charge of the control station has received make it possible to exclude tripping due to a short-circuit, or if the causes of the short-circuit have been removed.
3. **Electrical resetting always allowed**
   To be wired (by the customer): contact SO1, SO2, contact SY/1 and the auxiliary relay KO (only for MOD).
   Opening is always allowed by means of contact S02.

NB: If the magnetic, thermomagnetic or electronic trip unit is present, it is necessary to find the causes which led to the circuit-breaker being in the tripped position so as to prevent reclosing under short-circuit conditions. In all cases, manual resetting is always allowed.

Resetting instructions

MOD

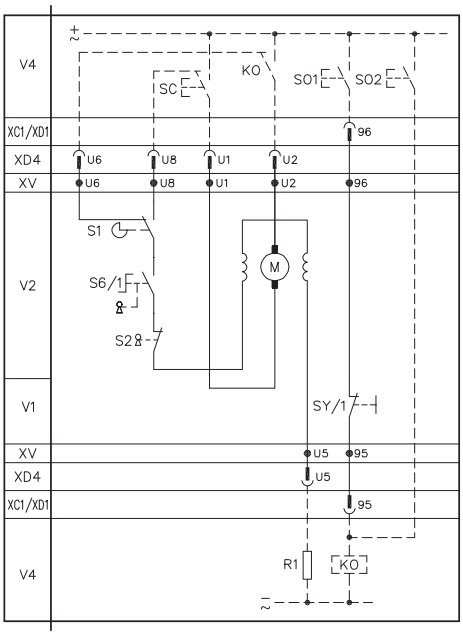

MOE or MOE-E

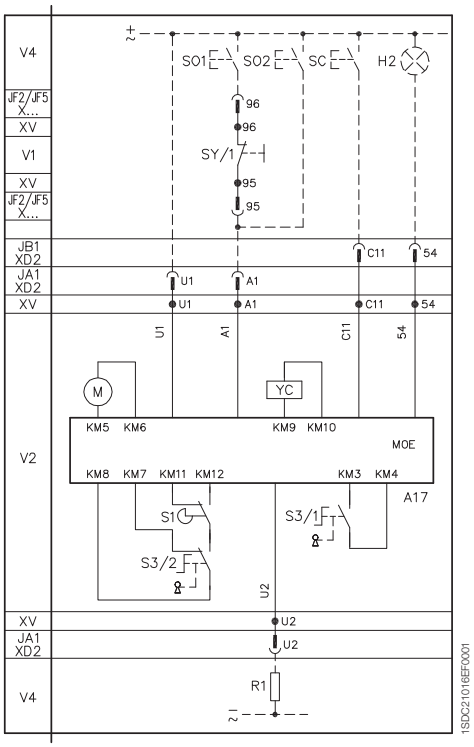

Caption

A17 = Actuator unit type MOE for the stored energy motor operator H2 = Signalling lamp for blocked stored energy motor operator
J.. = Connectors for the auxiliary contacts of the withdrawable version circuit-breaker; extraction of the connectors takes place at the same time as that of the circuit-breaker
KO = Auxiliary opening relay
M = Motor with excitation in series for opening and closing the circuit-breaker (fig. 21)
M = Motor for opening the circuit-breaker and spring charging for closing the circuit-breaker (fig. 22)
R1 = Motor thermistor
S1 = Contact controlled by the cam of the motor operator
S2 = Contact controlled by the key lock of the motor operator with direct action
S3/1-2 = Contacts controlled by the Auto/Manual selector and key lock of the stored energy motor operator
S6/1-2 = Contacts controlled by the Auto/Manual selector of the motor operator with direct action
SC = Pushbutton or contact for closing the circuit-breaker
SO1,S02 = Pushbuttons or contacts for opening the circuit-breaker (see “Instructions for resetting the circuit-breaker following release tripping”)
SY/1..3 = Contacts for electrical signalling of circuit-breaker open due to tripping of the thermomagnetic trip units, YO, YO1, YO2, YU (tripped position)
V1 = Circuit-breaker applications
V2 = Motor operator applications
V4 = Indicative apparatus and connections for control and signalling, outside the circuit-breaker
XB.. = Three-way connector for the plug-in version circuit-breaker auxiliary circuits
XC.. = Six-way connector for the plug-in version circuit-breaker auxiliary contacts
XD.. = Nine-way connector for the auxiliary circuits of the plug-in version circuit-breaker
XV = Terminal boxes of the circuit-breaker applications
YC = Shunt closing release of the stored energy motor operator

Ordering codes

Index

Examples of ordering **7**/2

Ordering codes for XT1

Circuit-breakers **7**/4

Accessories **7**/5

Ordering codes for XT2

Circuit-breakers **7**/12

Accessories **7**/19

Ordering codes for XT3

Circuit-breakers **7**/29

Accessories **7**/31

Ordering codes for XT4

Circuit-breakers **7**/38

Accessories **7**/45

Ordering codes

Examples of ordering

EXAMPLE 1: Terminals for fixed or fixed part of plug-in/withdrawable circuit-breaker

To fit the circuit-breaker with terminals other than those supplied on the basic circuit-breaker, the whole kits (6 or 8 pieces) or half-kits (3 or 4 pieces) can be requested. In the case of a mixed solution, the first code indicates the terminals to be mounted in the top part of the circuit-breaker, whereas the second code indicates the terminals to be mounted in the lower part. However, when only 3 or 4 pieces are requested, you must expressly specify whether the half-kit is to be mounted at the top or at the bottom. The fixed parts of plug-in and withdrawable version circuit-breakers can be fitted with the terminals (EF or HR/VR) specifically for the fixed parts, or with the same terminals used for the fixed version (ES, FCCu, FCCuAl, MC, FB) after the installation of the specific adapter for the fixed part.

XT1B 160A 3p fixed with EF top and FCCuAl bottom terminals for 240mm² cables	
	1SDA...R1
XT1B 160 TMD 160-1600 3p F F	066809
EF Extended front terminals 3 pieces	066865
FCCuAl Terminals for Copper/Aluminium cables 1x95...240mm² 3 pieces	067159

XT1 plug-in with EF top and HR/VR bottom terminals	
	1SDA...R1
XT1B 160 TMD 160-1600 3p F F	066809
KIT P PF EF (Fixed part of plug-in with EF terminals)	068183
KIT P MP (Kit for conversion from Fixed to Moving Part of Plug-in version)	066276
R - Rear HR/VR terminals (terminals for the fixed parts)	066268

XT2 withdrawable with ES top and MC bottom terminals	
	1SDA...R1
XT2S 160 TMA 160-1600 3p F F	067560
KIT W PF EF (Fixed part of withdrawable with EF extended front terminals)	068200
KIT W MP (Kit for conversion from Fixed to Moving Part of Withdrawable version)	066284
ADP Adapter for mounting terminals of the fixed version on the fixed part (2 pieces)	066307
ES Extended spread front terminals	066893
MC Multic-cable terminals 6x2.5...35mm²	066925

EXAMPLE 2: Electrical accessories for plug-in circuit-breaker

With the plug-in version circuit-breakers, disconnection of the auxiliary circuits can be made by means of two types of connectors:

– socket plug adapter to be fixed at the back of the panel for XT1, XT2, XT3 and XT4;
– socket plug adapter placed in the fixed part of plug-in and on the rear of the circuit-breaker for XT2 and XT4.

XT2N in plug-in version with SOR, AUX 1Q+1SY, connector on rear of panel	
	1SDA...R1
XT2N 160 TMA 160-1600 3p F F	067560
KIT P MP	066278
KIT P PF EF (Fixed part of plug-in with EF terminals)	068187
SOR-C 220-240V AC / 220-250V DC	066325
AUX-C 1Q+1SY 250V AC	066431
Socket plug connector for panel with 9PINS	066411

XT2N in plug-in version with SOR, AUX 1Q+1SY, connector on rear of circuit-breaker	
	1SDA...R1
XT2N 160 TMA 160-1600 3p F F	067560
KIT P MP	066278
KIT P PF EF (Fixed part of plug-in with EF terminals)	068187
SOR-C 220-240V AC / 220-250V DC	066325
AUX-C 1Q+1SY 250V	066431
SOCKET-PLUG CONNECTOR MP 12PINS XT2-XT4	066413
SOCKET-PLUG CONNECTOR FP 12PINS XT2-XT4	066414

EXAMPLE 3: Electrical accessories for withdrawable version

With the circuit-breakers in the withdrawable version it is necessary to only and exclusively order the accessories dedicated to this version. The electrical accessories specified for the withdrawable version are fitted both with the connector for fixed part to be installed in the side of the fixed part, and with the connector for the moving part.

XT2N in withdrawable version with SOR, AUX 1Q+1SY, RHD	
	1SDA...R1
XT2N 160 TMA 160-1600 3p F F	067560
KIT W PF EF (Fixed part of withdrawable with EF terminals)	068200
KIT W MP (Kit for conversion from fixed to withdrawable version)	066284
SOR-C 220-240V AC / 220-250V DC for Withdrawable	066355
AUX-C 1Q+1SY 250V for Withdrawable	066432
RHD Normal Direct Handle for Withdrawable	066476

EXAMPLE 4: Connector for 4th pole of withdrawable circuit-breaker

Should it be necessary to insert a SOR, a UVR, or a PS-SOR in the slot of the fourth pole of a withdrawable version circuit-breaker, it is necessary to order the connector for 4th pole of withdrawable circuit-breaker.

XT2S 4p Withdrawable with SOR(4p), UVR(3p)	
	1SDA...R1
XT2S 160 TMA 160-1600 4p F F	067583
KIT W PF EF (Fixed part of withdrawable with EF terminals)	068202
KIT W MP (Kit for conversion from fixed to withdrawable version)	066285
Connector 4th Pole SOR-PS-SOR	066415
SOR-C 220-240V AC / 220-250V DC for Withdrawable	066332
UVR-C 220-240V AC / 220-250V DC for Withdrawable	066406

EXAMPLE 5: Rear mechanical interlock

The rear interlock is made up of the (horizontal) MIR-H or (vertical) MIR-V frame unit and the MIR-P plates. To be able to receive the circuit-breakers directly mounted on the interlock plate, it is necessary to specify:

– the sales code of the frame;
– the sales codes of the plates associated with the circuit-breakers/fixed parts which are to be interlocked.

Horizontal mechanical interlock XT1 - XT2 in fixed version		
		1SDA...R1
Pos. 1	XT1B TMD 160-1600 A, 3p	066809
	MIR-H - Horizontal mechanical interlock	066637
	PLATE - XT1 Fixed	066639
Pos. 2	XT2N TMA 160-1600 A, 3p	067020
	PLATE - XT2 Fixed	066641

Ordering codes for XT1

Circuit-breakers

XT1 circuit-breaker

XT1 160 TMD - Fixed (F) - 3 poles - Front terminals (F)

Thermomagnetic trip unit - TMD			Icu (415V)	1SDA...R1									
				B		C		N		S		H	
	In	I_3		18kA		25kA		36kA		50kA		70kA	
TMD	16	450		066799									
TMD	20	450		066800									
TMD	25	450		066801		067391							
TMD	32	450		066802		067392		067411					
TMD	40	450		066803		067393		067412					
TMD	50	500		066804		067394		067413		067431		067449	
TMD	63	630		066805		067395		067414		067432		067450	
TMD	80	800		066806		067396		067415		067433		067451	
TMD	100	1000		066807		067397		067416		067434		067452	
TMD	125	1250		066808		067398		067417		067435		067453	
TMD	160	1600		066809		067399		067418		067436		067454	

XT1 160 TMD - Fixed (F) - 4 poles - Front terminals (F)

Thermomagnetic trip unit - TMD			Icu (415V)	1SDA...R1									
				B		C		N		S		H	
	In	I_3		18kA		25kA		36kA		50kA		70kA	
TMD	16	450		066810									
TMD	20	450		066811									
TMD	25	450		066812		067400							
TMD	32	450		066813		067401		067419					
TMD	40	450		066814		067402		067420					
TMD	50	500		066815		067403		067421		067439		067457	
TMD	63	630		066816		067404		067422		067440		067458	
TMD	80	800		066817		067405		067423		067441		067459	
TMD	100	1000		066818		067406		067424		067442		067460	
In N=50%	125	1250		066819		067407		067425		067443		067461	
In N=50%	160	1600		066820		067408		067426		067444		067462	
In N=100%	125	1250		066821		067409		067427		067445		067463	
In N=100%	160	1600		066888		067410		067428		067446		067464	

XT1D switch-disconnector

XT1D - Switch-disconnector

	1SDA...R1			
	3 poles		4 poles	
XT1D	068208		068209	

Ordering codes for XT1

Accessories

Fixed Parts, conversion kit and accessories for fixed parts

Fixed part of plug-in

Fixed part of plug-in (P)		
Type	1SDA...R1	
	3 poles	4 poles
Kit P PF EF	068183	068185
Kit P PF HR/VR[1]	068184	068186

[1] The terminals are factory-mounted in the horizontal position (HR)

Terminals for the fixed parts		
Type	1SDA...R1	
	3 pcs	4 pcs
EF - Front Extended terminals	066260	066261
R - Rear terminals HR/VR	066268	066269
PS - Rear phase separators 90mm	068953	068954

Conversion kit for turning a fixed circuit-breaker into the moving part of a plug-in circuit-breaker

Conversion kit of the circuit-breaker from fixed into moving part of plug-in		
Type	1SDA...R1	
	3 poles	4 poles
P MP KIT	066276	066277

Fixed part adapter

Adapter for mounting the terminals of the fixed circuit-breaker on the fixed part		
Type	1SDA...R1	
	3 poles	4 poles
ADP adapter for fixed part (2 pieces)	066305	066306

Service releases

SOR uncabled

SOR cabled

Shunt Opening release -SOR-	
Type	1SDA...R1
Uncabled Version	
SOR 12V DC	066313
SOR 24-30V AC/DC	066314
SOR 48-60V AC/DC	066315
SOR 110...127V AC / 110...125V DC	066316
SOR 220...240V AC / 220...250V DC	066317
SOR 380-440V AC	066318
SOR 480-525V AC	066319
Cabled Version	
SOR-C 12V DC	066321
SOR-C 24-30V AC/DC	066322
SOR-C 48-60V AC/DC	066323
SOR-C 110-127V AC / 110-125V DC	066324
SOR-C 220-240V AC / 220-250V DC	066325
SOR-C 380-440V AC	066326
SOR-C 480-525V AC	066327

Ordering codes for XT1

Accessories

PS-SOR uncabled

PS-SOR cabled

Shunt Opening release with permanent operation -PS -SOR-

Type	1SDA...R1	
Uncabled Version		
PS-SOR 24-30V AC/DC	066336	
PS-SOR 48-60V AC/DC	066337	
PS-SOR 110...127V AC / 110...125V DC	066338	
PS-SOR 220...240V AC / 220...250V DC	066339	
PS-SOR 380-440V AC	066340	
PS-SOR 480-525V AC	066341	
Cabled Version		
PS-SOR-C 24-30V AC/DC	066343	
PS-SOR-C 48-60V AC/DC	066344	
PS-SOR-C 110-127V AC / 110-125V DC	066345	
PS-SOR-C 220-240V AC / 220-250V DC	066346	
PS-SOR-C 380-440V AC	066347	
PS-SOR-C 480-525V AC	066348	

UVR uncabled

UVR cabled

Undervoltage release -UVR-

Type	1SDA...R1	
Uncabled Version		
UVR 24-30V AC/DC	066389	
UVR 48V AC/DC	060964	
UVR 60V AC/DC	066390	
UVR 110...127V AC / 110...125V DC	066391	
UVR 220...240V AC / 220...250V DC	066392	
UVR 380-440V AC	066393	
UVR 480-525V AC	066394	
Cabled Version		
UVR-C 24-30V AC/DC	066396	
UVR-C 48V AC/DC	060965	
UVR-C 60V AC/DC	066397	
UVR-C 110-127V AC / 110-125V DC	066398	
UVR-C 220-240V AC / 220-250V DC	066399	
UVR-C 380-440V AC	066400	
UVR-C 480-525V AC	066401	

Time delay device for undervoltage release

Delay device for undervoltage release -UVD-

Type	1SDA...R1	
UVD 24...30V AC/DC	051357	
UVD 48...60V AC/DC	051358	
UVD 110...125V AC/DC	051360	
UVD 220...250V AC/DC	051361	

Connectors

Socket Plug Connector

Socket Plug Connector on rear of panel		
Type	1SDA...R1	
Socket-plug panel connector with 3PINS	066409	
Socket-plug panel connector with 6PINS	066410	
Socket-plug panel connector with 9PINS	066411	
Socket-plug panel connector with 15PINS	066412	

Electrical signals

AUX uncabled

AUX cabled

Auxiliary Contacts -AUX-		
Type	1SDA...R1	
Uncabled Version		
AUX 250V AC	066422	
AUX 24V DC	066423	
Cabled Version		
AUX-C 3Q 250V Left	066426	
AUX-C 1Q+1SY 250V	066431	
AUX-C 2Q+1SY 250V	066433	
AUX-C 1Q+1SY 24V DC	066446	

AUP - Auxiliary position contacts

Auxiliary Position Contacts -AUP-		
Type	1SDA...R1	
Cabled Version		
AUP-I – Four Racked-in contacts 250V AC for plug-in circuit-breaker	066450	
AUP-I – Four Racked-in contacts 24V DC for plug-in circuit-breaker	066451	

AUE - Early auxiliary contacts

Early Auxiliary Contacts -AUE-		
Type	1SDA...R1	
AUE – Two contacts in the rotary handle RHx (Closed)	066454	
AUE – Two contacts in the rotary handle RHx (Open)	067118	

Ordering codes for XT1

Accessories

Motor Operators

Motor operator

Motor Operator with direct action -MOD-		
Type	1SDA...R1	
MOD 24V DC	066457	
MOD 48...60V DC	066458	
MOD 110...125V AC/DC	066459	
MOD 220...250V AC/DC	066460	
MOD 380...440V AC	066461	
MOD 480...525V AC	066462	

Rotary Handle Operating Mechanisms

Direct rotary handle

Transmitted rotary handle

Rotary Handle Operating Mechanism		
Type	1SDA...R1	
RHD Normal Direct Handle	066475	
RHD Direct Emergency Handle	066477	
RHE Normal Transmitted Handle	066479	
RHE Emergency Transmitted Handle	066481	
RHS-L Normal left lateral handle	066579	
RHS-L Large left lateral handle	066580	
RHS-R Normal right lateral handle	066581	
RHS-R Large right lateral handle	066582	
Transmitted Handle Spare Parts		
RHE_B Base for Transmitted Handle	066483	
RHE_S Rod of 500mm	066576	
RHE_H Normal Transmitted Handle	066577	
RHE_H Emergency Transmitted Handle	066578	
LH Normal large handle	066583	
LH Large emergency handle	066585	

IP54

IP54 Protection for transmitted rotary handle		
Type	1SDA...R1	
IP54 PROTECTION for transmitted handle -RHE-	066587	

Locks

Fixed padlock

Padlock on the circuit-breaker

Type	1SDA...R1
PLL Removable lock with padlocks in open position	066588
PLL Fixed lock with padlocks in open position	066589
PLL Fixed lock with padlocks in open/closed position	066591

Key lock on the circuit-breaker

Key lock on the circuit-breaker

Type	1SDA...R1
KLC Ronis key lock open, different keys, removable in open position	066593
KLC Ronis key lock open, same Type A keys, removable in open position	066594
KLC Ronis key lock open, same Type B keys, removable in open position	066595
KLC Ronis key lock open, same Type C keys, removable in open position	066596
KLC Ronis key lock open, same Type D keys, removable in open position	066597
KLC Ronis key lock open, same keys, removable in both position	066598

Key lock on the handle

Key lock on the handle

Type	1SDA...R1
RHL Ronis key lock open, different keys	066617
RHL Ronis key lock open, same Type A keys	066618
RHL Ronis key lock open, same Type B keys	066619
RHL Ronis key lock open, same Type C keys	066620
RHL Ronis key lock open, same Type D keys	066621
RHL Ronis key lock open/closed, different keys	066622

Key lock on the motor

Key lock on the motor

Type	1SDA...R1
MOL-D Ronis key lock open, different keys	066623
MOL-S Ronis key lock open, same Type A keys	066624
MOL-S Ronis key lock open, same Type B keys	066625
MOL-S Ronis key lock open, same Type C keys	066626
MOL-S Ronis key lock open, same Type D keys	066627

Interlock

Mechanical interlock

Type	1SDA...R1
MIR-H	066637
MIR-V	066638
Plate XT1 F	066639
Plate XT1 P	066640
Plate XT3 F	066643
Plate XT3 P	066644

Sealable Lock of Thermal Setting

Type	1SDA...R1
Lock on thermal setting for TMD trip unit	066651

Ordering codes for XT1

Accessories

Residual current devices

RC Inst / RC Sel

Residual current devices				
Type	1SDA...R1			
	3 poles		4 poles	
RC Sel Low 200mm			067121	
RC Inst	067122		067124	
RC Sel	067123		067125	

Panel type residual current relay		
Type	1SDA...R1	
RCQ020/A 115-230V AC	065979	
RCQ020/A 415V AC	065980	
Toroid closed Ø 60mm	037394	
Toroid closed Ø 110mm	037395	
Toroid closed Ø 185mm	050543	

Installation

DIN Guide

Bracket for fixing onto DIN rail				
Type	1SDA...R1			
	3 poles		4 poles	
KIT DIN50022	066652		066652	
DIN50022 KIT XT1+RC Low 200mm			067134	
KIT DIN50022 XT1+RC Sel/RC Inst	067135		067135	

Terminals, terminal covers and phase separators

Terminal covers

Insulating terminal covers				
Type	1SDA...R1			
	3 poles		4 poles	
LTC Low terminal covers	066655		066656	
HTC High terminal covers	066664		066665	

Sealable screw

Sealable screws for terminal covers		
Type	1SDA...R1	
Kit (2 pcs) sealable screws	066672	

Phase separators

Phase separators				
Type	1SDA...R1			
	4 pcs		6 pcs	
PB Height 25mm	066674		066679	
PS Height 100mm	066676		066681	
PS Height 200mm	066678		066683	

EF Terminal

FCCuAl Terminal

Terminals								
Type	1SDA...R1							
	3 pcs		4 pcs		6 pcs		8 pcs	
F Front Terminals	066849		066850		066851		066852	
EF Extended front terminals	066865		066866		066867		066868	
ES Extended spread front terminals	066889		066890		066891		066892	
FC CuAl Terminals for CuAl cables 1x1.5...50mm²	067151		067152		067153		067154	
FC CuAl Terminals for CuAl cables 1x35...95mm²	067155		067156		067157		067158	
FC CuAl Terminals for CuAl cables 1x150...240mm² + ADP	067159		067160		067161		067162	
FC Cu Terminals for Cu cables	066905		066906		066907		066908	
MC Multi-cable Terminals 6x2.5...35mm²	066921		066922		066923		066924	
R Rear Adjustable Terminals	066937		066938		066939		066940	
R-RC Rear terminals for Residual current	066953		066954					
FB Flexibar Terminals	066957		066958		066959		066960	

Automatic transfer devices

ATS021

ATS021- ATS022 Automatic transfer devices		
Type	1SDA...R1	
ATS021	065523	
ATS022	065524	

Spare parts

Type	1SDA...R1	
SA RC Sel / RC Inst - Opening solenoid of the residual current device	066990	
AUX-C - Loose cabled auxiliary contact 250V[1]	066994	
AUX-C - Loose cabled auxiliary contact 20V[1]	066996	

[1] un-numbered cables

Flange

Flange for compartment door				
Type	1SDA...R1			
	3 poles		4 poles	
Small flange for circuit-breaker	068657		068657	
Large flange for circuit-breaker	068639		068640	
Flange MOD	068648		068648	
Flange for direct handle RHD	068651		068651	
Flange for residual current RC Sel / Inst	068653		068654	

Ordering codes for XT2

Circuit-breakers

XT2 circuit-breaker

XT2 160 TMD/TMA - Fixed (F) - 3 poles - Front terminals (F)

Thermomagnetic trip unit - TMD/TMA			Icu (415V)	1SDA...R1				
				N	S	H	L	V
	In	I_3		36kA	50kA	70kA	120kA	150kA
TMD	1.6	16		067000	067540	067584	067628	067672
TMD	2	20		067001	067541	067585	067629	067673
TMD	2.5	25		067002	067542	067586	067630	067674
TMD	3.2	32		067003	067543	067587	067631	067675
TMD	4	40		067004	067544	067588	067632	067676
TMD	5	50		067005	067545	067589	067633	067677
TMD	6.3	63		067006	067546	067590	067634	067678
TMD	8	80		067007	067547	067591	067635	067679
TMD	10	100		067008	067548	067592	067636	067680
TMD	12.5	125		067009	067549	067593	067637	067681
TMD	16	300		067010	067550	067594	067638	067682
TMD	20	300		067011	067551	067595	067639	067683
TMD	25	300		067012	067552	067596	067640	067684
TMD	32	320		067013	067553	067597	067641	067685
TMA	40	400		067014	067554	067598	067642	067686
TMA	50	500		067015	067555	067599	067643	067687
TMA	63	630		067016	067556	067600	067644	067688
TMA	80	800		067017	067557	067601	067645	067689
TMA	100	1000		067018	067558	067602	067646	067690
TMA	125	1250		067019	067559	067603	067647	067691
TMA	160	1600		067020	067560	067604	067648	067692

XT2 160 TMD/TMA - Fixed (F) - 4 poles - Front terminals (F)

Thermomagnetic trip unit - TMD/TMA			Icu (415V)	1SDA...R1				
				N	S	H	L	V
	In	I_3		36kA	50kA	70kA	120kA	150kA
TMD	1.6	16		067021	067561	067605	067649	067693
TMD	2	20		067022	067562	067606	067650	067694
TMD	2.5	25		067023	067563	067607	067651	067695
TMD	3.2	32		067024	067564	067608	067652	067696
TMD	4	40		067025	067565	067609	067653	067697
TMD	5	50		067026	067566	067610	067654	067698
TMD	6.3	63		067027	067567	067611	067655	067699
TMD	8	80		067028	067568	067612	067656	067700
TMD	10	100		067029	067569	067613	067657	067701
TMD	12.5	125		067030	067570	067614	067658	067702
TMD	16	300		067031	067571	067615	067659	067703
TMD	20	300		067032	067572	067616	067660	067704
TMD	25	300		067033	067573	067617	067661	067705
TMD	32	320		067034	067574	067618	067662	067706
TMA	40	400		067035	067575	067619	067663	067707
TMA	50	500		067036	067576	067620	067664	067708
TMA	63	630		067037	067577	067621	067665	067709
TMA	80	800		067038	067578	067622	067666	067710
TMA	100	1000		067039	067579	067623	067667	067711
TMA In N=50%	125	1250		067040	067580	067624	067668	067712
TMA In N=50%	160	1600		067041	067581	067625	067669	067713
TMA In N=100%	125	1250		067042	067582	067626	067670	067714
TMA In N=100%	160	1600		067043	067583	067627	067671	067715

XT2 circuit-breaker

XT2 160 TMG - Fixed (F) - 3 poles - Front terminals (F)

Thermomagnetic trip unit - TMG			Icu (415V)	1SDA...R1									
				N		S							
	In	I_3		36kA		50kA							
TMG	16	160		067716		067738							
TMG	20	160		067717		067739							
TMG	25	160		067718		067740							
TMG	32	160		067719		067741							
TMG	40	160		067720		067742							
TMG	50	200		067721		067743							
TMG	63	200		067722		067744							
TMG	80	240		067723		067745							
TMG	100	300		067724		067746							
TMG	125	375		067725		067747							
TMG	160	480		067726		067748							

XT2 160 TMG - Fixed (F) - 4 poles - Front terminals (F)

Thermomagnetic trip unit - TMG			Icu (415V)	1SDA...R1									
				N		S							
	In	I_3		36kA		50kA							
TMG	16	160		067727		067749							
TMG	20	160		067728		067750							
TMG	25	160		067729		067751							
TMG	32	160		067730		067752							
TMG	40	160		067731		067753							
TMG	50	200		067732		067754							
TMG	63	200		067733		067755							
TMG	80	240		067734		067756							
TMG	100	300		067735		067757							
TMG	125	375		067736		067758							
TMG	160	480		067737		067759							

XT2 160 MF/MA - Fixed (F) - 3 poles - Front terminals (F)

Thermomagnetic trip unit - MF/MA			Icu (415V)	1SDA...R1									
				N		S		H		L		V	
	In	I_3		36kA		50kA		70kA		120kA		150kA	
MF	1	14		067044		067760		067770		067780		067790	
MF	2	28		067045		067761		067771		067781		067791	
MF	4	56		067046		067762		067772		067782		067792	
MF	8.5	120		067047		067763		067773		067783		067793	
MF	12.5	175		067048		067764		067774		067784		067794	
MA	20	120...280		067049		067765		067775		067785		067795	
MA	32	192...448		067050		067766		067776		067786		067796	
MA	52	314...728		067051		067767		067777		067787		067797	
MA	80	480...1120		067052		067768		067778		067788		067798	
MA	100	600...1400		067053		067769		067779		067789		067799	

Ordering codes for XT2

Circuit-breakers

XT2 circuit-breaker

XT2 160 Ekip LS/I - Fixed (F) - 3 poles - Front terminals (F)

Electronic trip unit - Ekip LS/I	In	Icu (415V)	1SDA...R1 N 36kA	S 50kA	H 70kA	L 120kA	V 150kA
Ekip LS/I	10		067054	067800	067857	067914	067971
Ekip LS/I	25		067055	067801	067858	067915	067972
Ekip LS/I	63		067056	067802	067859	067916	067973
Ekip LS/I	100		067057	067803	067860	067917	067974
Ekip LS/I	160		067058	067804	067861	067918	067975

XT2 160 Ekip I - Fixed (F) - 3 poles - Front terminals (F)

Electronic trip unit - Ekip I	In	Icu (415V)	1SDA...R1 N 36kA	S 50kA	H 70kA	L 120kA	V 150kA
Ekip I	10		067059	067805	067862	067919	067976
Ekip I	25		067060	067806	067863	067920	067977
Ekip I	63		067061	067807	067864	067921	067978
Ekip I	100		067062	067808	067865	067922	067979
Ekip I	160		067063	067809	067866	067923	067980

XT2 160 Ekip LSI - Fixed (F) - 3 poles - Front terminals (F)

Electronic trip unit - Ekip LSI	In	Icu (415V)	1SDA...R1 N 36kA	S 50kA	H 70kA	L 120kA	V 150kA
Ekip LSI	10		067067	067810	067867	067924	067981
Ekip LSI	25		067068	067811	067868	067925	067982
Ekip LSI	63		067069	067812	067869	067926	067983
Ekip LSI	100		067070	067813	067870	067927	067984
Ekip LSI	160		067071	067814	067871	067928	067985

XT2 160 Ekip LSIG - Fixed (F) - 3 poles - Front terminals (F)

Electronic trip unit - Ekip LSIG	In	Icu (415V)	1SDA...R1 N 36kA	S 50kA	H 70kA	L 120kA	V 150kA
Ekip LSIG	10		067072	067815	067872	067929	067986
Ekip LSIG	25		067073	067816	067873	067930	067987
Ekip LSIG	63		067074	067817	067874	067931	067988
Ekip LSIG	100		067075	067818	067875	067932	067989
Ekip LSIG	160		067076	067819	067876	067933	067990

XT2 160 Ekip M-I - Fixed (F) - 3 poles - Front terminals (F)

Electronic trip unit - Ekip M-I	In	Icu (415V)	1SDA...R1 N 36kA	S 50kA	H 70kA	L 120kA	V 150kA
Ekip M-I	20		067086	067829	067886	067943	068000
Ekip M-I	32		067087	067830	067887	067944	068001
Ekip M-I	52		067088	067831	067888	067945	068002
Ekip M-I	100		067089	067832	067889	067946	068003

XT2 circuit-breaker

XT2 160 Ekip LS/I - Fixed (F) - 4 poles - Front terminals (F)

Electronic trip unit - Ekip LS/I		Icu (415V)	1SDA...R1				
			N	S	H	L	V
	In		36kA	50kA	70kA	120kA	150kA
Ekip LS/I	10		067090	067833	067890	067947	068004
Ekip LS/I	25		067091	067834	067891	067948	068005
Ekip LS/I	63		067092	067835	067892	067949	068006
Ekip LS/I	100		067093	067836	067893	067950	068007
Ekip LS/I	160		067095	067838	067895	067952	068009

XT2 160 Ekip I - Fixed (F) - 4 poles - Front terminals (F)

Electronic trip unit - Ekip I		Icu (415V)	1SDA...R1				
			N	S	H	L	V
	In		36kA	50kA	70kA	120kA	150kA
Ekip I	10		067096	067839	067896	067953	068010
Ekip I	25		067097	067840	067897	067954	068011
Ekip I	63		067098	067841	067898	067955	068012
Ekip I	100		067099	067842	067899	067956	068013
Ekip I	160		067101	067844	067901	067958	068015

XT2 160 Ekip LSI - Fixed (F) - 4 poles - Front terminals (F)

Electronic trip unit - Ekip LSI		Icu (415V)	1SDA...R1				
			N	S	H	L	V
	In		36kA	50kA	70kA	120kA	150kA
Ekip LSI	10		067102	067845	067902	067959	068016
Ekip LSI	25		067103	067846	067903	067960	068017
Ekip LSI	63		067104	067847	067904	067961	068018
Ekip LSI	100		067105	067848	067905	067962	068019
Ekip LSI	160		067107	067850	067907	067964	068021

XT2 160 Ekip LS/I - Fixed (F) - 4 poles - Front terminals (F)

Electronic trip unit - Ekip LSIG		Icu (415V)	1SDA...R1				
			N	S	H	L	V
	In		36kA	50kA	70kA	120kA	150kA
Ekip LSIG	10		067108	067851	067908	067965	068022
Ekip LSIG	25		067109	067852	067909	067966	068023
Ekip LSIG	63		067110	067853	067910	067967	068024
Ekip LSIG	100		067111	067854	067911	067968	068025
Ekip LSIG	160		067113	067856	067913	067970	068027

Ordering codes for XT2

Circuit-breakers

XT2 160 - Breaking part

	1SDA...R1				
	N	S	H	L	V
3 poles	068163	068164	068165	068166	068167
4 poles	068168	068169	068170	068171	068172

Loose trip unit

Loose trip units XT2

Thermomagnetic - TMA/TMD			1SDA...R1	
			3 poles	4 poles
	In	I_3		
TMD	16	300	067226	067247
TMD	20	300	067227	067248
TMD	25	300	067228	067249
TMD	32	320	067229	067250
TMA	40	400	067230	067251
TMA	50	500	067231	067252
TMA	63	630	067232	067253
TMA	80	800	067233	067254
TMA	100	1000	067234	067255
TMA	125	1250	067235	067258
TMA	160	1600	067236	067259
TMA In N=50%	125	1250		067256
TMA In N=50%	160	1600		067257

Loose trip units XT2

Thermomagnetic - TMG			1SDA...R1	
			3 poles	4 poles
	In	I_3		
TMG	80	240	067267	067278
TMG	100	300	067268	067279
TMG	125	375	067269	067280
TMG	160	480	067270	067283

Loose trip units XT2

Thermomagnetic - MA			1SDA...R1
			3 poles
	In	I_3	
MA	20	120...280	067290
MA	32	192...448	067291
MA	52	314...728	067292
MA	80	480...1120	067293
MA	100	600...1400	067294

Loose trip unit

Loose trip units XT2									
Electronic - Ekip LS/I			1SDA…R1						
			3 poles		4 poles				
	In								
Ekip LS/I	25		067296		067329				
Ekip LS/I	63		067297		067330				
Ekip LS/I	100		067298		067331				
Ekip LS/I	160		067299		067333				

Loose trip units XT2									
Electronic - Ekip I			1SDA…R1						
			3 poles		4 poles				
	In								
Ekip I	25		067301		067335				
Ekip I	63		067302		067336				
Ekip I	100		067303		067337				
Ekip I	160		067304		067339				

Loose trip units XT2									
Electronic - Ekip LSI			1SDA…R1						
			3 poles		4 poles				
	In								
Ekip LSI	25		067306		067341				
Ekip LSI	63		067307		067342				
Ekip LSI	100		067308		067343				
Ekip LSI	160		067309		067345				

Loose trip units XT2									
Electronic - Ekip LSIG			1SDA…R1						
			3 poles		4 poles				
	In								
Ekip LSIG	25		067311		067347				
Ekip LSIG	63		067312		067348				
Ekip LSIG	100		067313		068052				
Ekip LSIG	160		067314		067350				

Loose releases XT2									
Electronic - Ekip M-I			1SDA…R1						
			3 poles						
	In								
Ekip M-I	20		067324						
Ekip M-I	32		067325						
Ekip M-I	52		067326						
Ekip M-I	100		067327						

Ordering codes for XT2

Circuit-breakers

Loose trip unit

Loose trip units XT2										
Electronic - Ekip M-LIU			1SDA...R1							
			3 poles							
	In									
Ekip M-LIU	25		067352							
Ekip M-LIU	63		067353							
Ekip M-LIU	100		067354							

Loose trip units XT2										
Electronic - Ekip M-LRIU			1SDA...R1							
			3 poles							
	In									
Ekip M-LRIU	25		067357							
Ekip M-LRIU	63		067358							
Ekip M-LRIU	100		067359							

Loose trip units XT2										
Electronic - Ekip G-LS/I			1SDA...R1							
			3 poles		4 poles					
	In									
Ekip G-LS/I	25		067362		067368					
Ekip G-LS/I	63		067363		067369					
Ekip G-LS/I	100		067364		067370					
Ekip G-LS/I	160		067365		067372					

Loose trip units XT2										
Electronic - Ekip N-LS/I			1SDA...R1							
					4 poles					
	In									
Ekip N-LS/I	63				067375					
Ekip N-LS/I	100				067376					

Ordering codes for XT2

Accessories

Fixed parts, conversion kit and accessories for fixed parts

Fixed part of plug-in

Fixed part of plug-in (P)

Type	1SDA...R1	
	3 poles	4 poles
Kit P PF EF	068187	068190
Kit P PF HR/VR[1]	068188	068191

[1] The terminals are factory-mounted in the horizontal position (HR)

Fixed part of withdrawable

Fixed part of withdrawable (W)

Type	1SDA...R1	
	3 poles	4 poles
Kit W PF EF	068200	068202
Kit W PF HR/VR[1]	068201	068203

[1] The terminals are factory-mounted in the horizontal position (HR)

Terminals for the fixed parts

Type	1SDA...R1	
	3 pcs	4 pcs
EF - Front Extended Terminals	066262	066263
R - Rear Terminals HR/VR	066270	066271
PS - Rear phase separators 90mm	068953	068954

Conversion kit for turning a fixed circuit-breaker into the moving part of a plug-in circuit-breaker

Conversion Kit of the circuit-breaker from fixed to the moving part of plug-in

Type	1SDA...R1	
	3 pcs	4 pcs
P MP KIT	066278	066279

Conversion kit for turning a fixed circuit-breaker into the moving part of a withdrawable circuit-breaker

Conversion Kit of the circuit-breaker from fixed to the moving part of withdrawable

Type	1SDA...R1	
	3 pcs	4 pcs
W MP KIT	066284	066285

Conversion Kit of the fixed part from plug-in to withdrawable

Type	1SDA...R1
	4 poles
FP P>W KIT	066288

Conversion Kit of RC Sel from Fixed to Plug-in

Type	1SDA...R1
	4 poles
P MP RC Sel 4p KIT	066290

Ordering codes for XT2

Accessories

Conversion Kit of RC Sel from plug-in to withdrawable		
Type	1SDA...R1	
	4 poles	
W MP RC Sel 4p KIT	066292	

Key lock/Padlock for fixed part

Key lock for fixed part of withdrawable		
Type	1SDA...R1	
KL-D Key Lock FP, different keys	066293	
KL-S Key Lock FP, same keys N.20005	066294	

Ronis key lock/Padlock for fixed part

Ronis key lock for fixed part of withdrawable		
Type	1SDA...R1	
KL-D Ronis FP key lock, different keys	066298	
KL-S Ronis FP key lock, same Type A keys	066300	

Fixed part adapter

Adapter for mounting the terminals of the fixed circuit-breaker on the fixed part				
Type	1SDA...R1			
	3 poles		4 poles	
ADP Adapter fixed part (2 pieces)	066307		066308	

Service releases

SOR uncabled

SOR cabled

SOR for withdrawable

Shunt opening release -SOR-				
Type	1SDA...R1			
	Fixed/Plug-in		Withdrawable	
Uncabled Version				
SOR 12V DC	066313			
SOR 24-30V AC/DC	066314			
SOR 48-60V AC/DC	066315			
SOR 110...127V AC / 110...125V DC	066316			
SOR 220...240V AC / 220...250V DC	066317			
SOR 380-440V AC	066318			
SOR 480-525V AC	066319			
Cabled Version				
SOR-C 12V DC	066321		066328	
SOR-C 24-30V AC/DC	066322		066329	
SOR-C 48-60V AC/DC	066323		066330	
SOR-C 110-127V AC / 110-125V DC	066324		066331	
SOR-C 220-240V AC / 220-250V DC	066325		066332	
SOR-C 380-440V AC	066326		066333	
SOR-C 480-525V AC	066327		066334	

PS-SOR uncabled

PS-SOR cabled

PS-SOR for withdrawable

Shunt Opening release with permanent operation -PS -SOR-

Type	1SDA...R1			
	Fixed/Plug-in		Withdrawable	
Uncabled Version				
PS-SOR 24-30V AC/DC	066336			
PS-SOR 48-60V AC/DC	066337			
PS-SOR 110...127V AC / 110...125V DC	066338			
PS-SOR 220...240V AC / 220...250V DC	066339			
PS-SOR 380-440V AC	066340			
PS-SOR 480-525V AC	066341			
Cabled Version				
PS-SOR-C 24-30V AC/DC	066343		066350	
PS-SOR-C 48-60V AC/DC	066344		066351	
PS-SOR-C 110-127V AC / 110-125V DC	066345		066352	
PS-SOR-C 220-240V AC / 220-250V DC	066346		066354	
PS-SOR-C 380-440V AC	066347		066355	
PS-SOR-C 480-525V AC	066348		066356	

UVR uncabled

UVR cabled

UVR for withdrawable

Undervoltage release -UVR-

Type	1SDA...R1			
	Fixed/Plug-in		Withdrawable	
Uncabled Version				
UVR 24-30V AC/DC	066389			
UVR 48V AC/DC	069064			
UVR 60V AC/DC	066390			
UVR 110...127V AC / 110...125V DC	066391			
UVR 220...240V AC / 220...250V DC	066392			
UVR 380-440V AC	066393			
UVR 480-525V AC	066394			
Cabled Version				
UVR-C 24-30V AC/DC	066396		066403	
UVR-C 48V AC/DC	069065		069066	
UVR-C 60V AC/DC	066397		066404	
UVR-C 110-127V AC / 110-125V DC	066398		066405	
UVR-C 220-240V AC / 220-250V DC	066399		066406	
UVR-C 380-440V AC	066400		066407	
UVR-C 480-525V AC	066401		066408	

Time delay device for undervoltage release

Delay device for undervoltage release -UVD-

Type	1SDA...R1	
UVD 24...30V AC/DC	051357	
UVD 48...60V AC/DC	051358	
UVD 110...125V AC/DC	051360	
UVD 220...250V AC/DC	051361	

Ordering codes for XT2

Accessories

Connectors

Connector of fourth pole for Withdrawable		
Type	1SDA...R1	
Connector 4th Pole SOR-PS-SOR	066415	
Connector 4th Pole UVR	066418	

Socket-plug panel connector

Socket-Plug Connector on rear of panel		
Type	1SDA...R1	
Socket-plug panel connector with 3PINS	066409	
Socket-plug panel connector with 6PINS	066410	
Socket-plug panel connector with 9PINS	066411	
Socket-plug panel connector with 15PINS	066412	

Fixed part socket-plug connector

Fixed part socket-plug connector		
Type	1SDA...R1	
Socket-plug connector of Moving Part 12PINS	066413	
Socket-plug connector of Fixed Part 12PINS	066414	

Electrical signals

AUX uncabled

AUX cabled

AUX for withdrawable

Auxiliary Contacts -AUX-				
Type	1SDA...R1			
	Fixed/Plug-in		Withdrawable	
Uncabled Version				
AUX 24V DC	066423			
AUX-SA 24V DC	066425			
AUX 250V AC	066422			
AUX-SA 250V AC	066424			
Cabled Version				
AUX-SA-C 24V DC	067116		067117	
AUX-C 1Q+1SY 24V DC	066446		066447	
AUX-C 3Q+1SY 24V DC	066448		066449	
AUX-SA-C 250V AC	066429		066430	
AUX-C 1Q+1SY 250V AC	066431		066432	
AUX-C 2Q+1SY 250V AC	066433			
AUX-C 2Q+2SY+1SA 250V AC	066438		066439	
AUX-C 3Q 250V AC Left	066427			
AUX-C 3Q+1SY 250V AC	066434		066435	
AUX-C 3Q+2SY 250V AC	066436		066437	
AUX-C 1Q+1SY 400V AC	066444		066445	
AUX-C 2Q 400V AC	066440		066443	

AUP - Auxiliary position contacts

Auxiliary Position Contacts -AUP-		
Type	1SDA...R1	
Cabled Version		
AUP-I – Four Racked-in contacts 250V AC for plug-in/withdrawable circuit-breaker	066450	
AUP-I – Four Racked-in contacts 24V DC for plug-in/withdrawable circuit-breaker	066451	
AUP-R – Two Racked-out contacts 250V AC for withdrawable circuit-breaker	066452	
AUP-R – Two Racked-out contacts 24V DC for withdrawable circuit-breaker	066453	

AUE - Early auxiliary contacts

Early Auxiliary Contacts -AUE-				
Type	1SDA...R1			
	Fixed/Plug-in		Withdrawable	
AUE – Two contacts in the rotary handle RHx (Open)	067118		067119	
AUE – Two contacts in the rotary handle RHx (Close)	066454		066455	
AUE – Two contacts in the circuit-breaker (Open/Close)	066456			

Motor Operators

MOE - Motor operator

Stored energy Motor Operator MOE		
Type	1SDA...R1	
MOE 24V DC	066463	
MOE 48...60V DC	066464	
MOE 110...125V AC/DC	066465	
MOE 220...250V AC/DC	066466	
MOE 380...440V AC	066467	
MOE 480...525V AC	066468	

MOE-E - Electronic motor operator

Electronic stored energy motor operator MOE-E		
Type	1SDA...R1	
MOE-E 24V DC	066469	
MOE-E 48...60V DC	066470	
MOE-E 110...125V AC/DC	066471	
MOE-E 220...250V AC/DC	066472	
MOE-E 380...440V AC	066473	
MOE-E 480...525V AC	066474	

Ordering codes for XT2

Accessories

Rotary Handle Operating Mechanism

Direct handle

Transmitted handle

Rotary Handles

Type	1SDA...R1			
	Fixed/Plug-in		Withdrawable	
RHD Normal Direct Handle	069053		066476	
RHD Direct Emergency Handle	069054		066478	
RHE Normal Transmitted Handle	069055		066480	
RHE Emergency Transmitted Handle	069056		066482	
RHS L Normal Left Lateral Handle	069058			
RHS L Emergency Left Lateral Handle	069059			
RHS R Normal Right Lateral Handle	069060			
RHS R Emergency Right Lateral Handle	069061			
Transmitted Handle Spare Parts				
RHE_B Base for Transmitted Handle	069057		066484	
RHE_S Rod of 500mm	066576			
RHE_H Normal Transmitted Handle	066577			
RHE_H Emergency Transmitted Handle	066578			
LH Wide Normal Handle	066583			
LH Wide Emergency Handle	066585			

IP54

IP54 Protection for transmitted rotary handle

Type	1SDA...R1	
IP54 protection for transmitted handle -RHE-	066587	

Locks

Lateral handle

Fixed padlock

Lock and Padlocks on the circuit-breaker

Type	1SDA...R1	
PLL Fixed lock with padlocks in open position	066590	
PLL Fixed lock with padlocks in open/closed position	066592	

Key lock on the circuit-breaker

Key lock on the circuit-breaker

Type	1SDA...R1	
KLC Ronis key lock open, different keys, removable in open position	066599	
KLC Ronis key lock open, same Type A keys, removable in open position	066600	
KLC Ronis key lock open, same Type B keys, removable in open position	066601	
KLC Ronis key lock open, same Type C keys, removable in open position	066602	
KLC Ronis key lock open, same Type D keys, removable in open position	066603	
KLC Ronis key lock open, same keys, removable in both position	066604	

Key lock on the handle

Key lock on the handle

Type	1SDA...R1	
RHL Ronis key lock open, different keys	066617	
RHL Ronis key lock open, same Type A keys	066618	
RHL Ronis key lock open, same Type B keys	066619	
RHL Ronis key lock open, same Type C keys	066620	
RHL Ronis key lock open, same Type D keys	066621	
RHL Ronis key lock open/closed, different keys	066622	

Key lock on the motor

Key lock on the motor

Type	1SDA...R1	
MOL-D Ronis key lock open, different keys	066629	
MOL-S Ronis key lock open, same Type A keys	066630	
MOL-S Ronis key lock open, same Type B keys	066631	
MOL-S Ronis key lock open, same Type C keys	066632	
MOL-S Ronis key lock open, same Type D keys	066633	
MOL-M Key lock against manual operation	066634	

Front for locks

Front for FLD locks

Type	1SDA...R1			
	Fixed/Plug-in		Withdrawable	
Front for FLD locks	066635		066636	

Interlock

Mechanical interlock

Type	1SDA...R1	
MIR-H	066637	
MIR-V	066638	
Plate XT2 F	066641	
Plate XT2 P/W	066642	
Plate XT4 F	066645	
Plate XT4 P/W	066646	

Ordering codes for XT2

Accessories

Residual current devices

RC Sel

Residual current devices		
Type	1SDA...R1	
	4 poles	
RC Sel	067126	

Panel type residual current relay		
Type	1SDA...R1	
RCQ020/A 115-230V AC	065979	
RCQ020/A 415V AC	065980	
Toroid closed Ø 60mm	037394	
Toroid closed Ø 110mm	037395	
Toroid closed Ø 185mm	050543	

Installation

DIN guide

Bracket for fixing onto DIN rail				
Type	1SDA...R1			
	3 poles		4 poles	
DIN50022 KIT	066653		066653	

Terminals, terminal cover and phase separators

Terminal cover

Insulating terminal covers				
Type	1SDA...R1			
	3 poles		4 poles	
LTC Low terminal covers	066657		066659	
HTC High terminal covers	066666		066667	

Sealable screw

Sealable screws for terminal covers		
Type	1SDA...R1	
Kit with two sealable screws	066672	

Phase separators

Phase separators				
Type	1SDA...R1			
	4 pcs		6 pcs	
PB Height 25mm	069062		069063	
PB Height 100mm	066675		066680	
PB Height 200mm	066677		066682	

EF Terminal

FCCuAl Terminal

Terminals

Type	1SDA...R1			
	3 pcs	4 pcs	6 pcs	8 pcs
F Front Terminals	066853	066854	066855	066856
EF Extetnded front terminals	066869	066870	066871	066872
ES Extended spread front terminals	066893	066894	066895	066896
FC CuAl Terminals for CuAl cables 1x1...95mm²	067163	067164	067165	067166
FC CuAl Terminals for CuAl cables 1x70...185mm²	067167	067168	067169	067170
FC CuAl Terminals for CuAl cables 1x150…240mm² + ADP	067171	067172	067173	067174
FC CuAl Terminals for CuAl cables 2x35...95mm²	067175	067176	067177	067178
FC Cu Terminali for Cu cables	066909	066910	066911	066912
MC Multi-cable Terminals 6x2.5...35mm²	066925	066926	066927	066928
R Rear adjustable Terminals	066941	066942	066943	066944
FB Flexibar Terminals	066961	066962	066963	066964

Accessories for electronic trip units

Ekip Display

Ekip LED Meter

Type	1SDA...R1	
	Fixed/Plug-in	Withdrawable
Ekip Display	068659	068659
Ekip LED Meter	068660	068660
Ekip Com	068661	068662
PR212/CI Contactor control unit	050708	050708
EP010 Interface module	059469	059469
HMI030 Interface on front of panel	063143	063143

CT External neutral

Type	1SDA...R1
CT External neutral of 10A	067211
CT External neutral of 25A	067212
CT External neutral of 63A	066976
CT External neutral of 100A	066977
CT External neutral of 160A	066978

Connection Kit

Type	1SDA...R1	
	Fixed/Plug-in	Withdrawable
Kit of 24V DC auxiliary voltage for electronic trip units	066980	066981
Kit for PTC Connection	066982	066983
Kit for external neutral Connection	066984	066985
Kit for PR212/CI Connection	066986	066987

Ekip T&P unit

Test and Configuration Unit

Type	1SDA...R1
Ekip TT Trip Test Unit	066988
Ekip T&P Programming and test Unit	066989

Ordering codes for XT2

Accessories

Automatic transfer devices

ATS021

ATS021- ATS022 Automatic transfer devices		
Type	1SDA...R1	
ATS021	065523	
ATS022	065524	

Spare parts

Type	1SDA...R1			
	Fixed/Plug-in		Withdrawable	
SA RC Sel - Opening solenoid of the residual current device	066991		066993	
AUX-C -Loose cabled Auxiliary Contact 250V AC[1]	066994		066995	
AUX-C -Loose cabled Auxiliary Contact 24V DC[1]	066996		066997	

[1] un-numbered cables

Fixed/Moving part connector for withdrawable

Fixed Part Connector for Withdrawable		
Type	1SDA...R1	
1 connector for fixed part/moving part of withdrawable with 2 PINS for SOR/UVR up to 400V	067213	
1 connector for fixed part/moving part of withdrawable with 3 PINS for AUX up to 400V	067214	

Flange

Flange for Compartment door								
Type	1SDA...R1							
	3 poles		4 poles		3 poles		4 poles	
	Fixed/ Plug-in		Fixed/ Plug-in		With-drawable		With-drawable	
Small flange for circuit-breaker	068657		068657					
Large flange for circuit-breaker	068641		068642					
Flange for MOE/MOE-E/FLD	068649		068649		068650		068650	
Flange for direct handle RHD	068651		068651		068652		068652	
Flange for residual current RC Sel			066647				066648	

Ordering codes for XT3

Circuit-breakers

XT3 circuit-breaker

XT3 250 TMD - Fixed (F) - 3 poles - Front terminals (F)

Thermomagnetic trip unit - TMD			Icu (415V)	1SDA...R1									
				N		S							
	In	I_3		36kA		50kA							
TMD	63	630		068053		068215							
TMD	80	800		068054		068216							
TMD	100	1000		068055		068217							
TMD	125	1250		068056		068218							
TMD	160	1600		068057		068219							
TMD	200	2000		068058		068220							
TMD	250	2500		068059		068221							

XT3 250 TMD - Fixed (F) - 4 poles - Front terminals (F)

Thermomagnetic trip unit - TMD			Icu (415V)	1SDA...R1									
				N		S							
	In	I_3		36kA		50kA							
TMD	63	630		068060		068222							
TMD	80	800		068061		068223							
TMD	100	1000		068062		068224							
In N=50%	125	1250		068063		068225							
In N=50%	160	1600		068064		068226							
In N=50%	200	2000		068065		068227							
In N=50%	250	2500		068066		068228							
In N=100%	125	1250		068067		068229							
In N=100%	160	1600		068068		068230							
In N=100%	200	2000		068069		068231							
In N=100%	250	2500		068070		068232							

XT3 250 TMG - Fixed (F) - 3 poles - Front terminals (F)

Thermomagnetic trip unit - TMG			Icu (415V)	1SDA...R1									
				N		S							
	In	I_3		36kA		50kA							
TMG	63	400		068251		068265							
TMG	80	400		068252		068266							
TMG	100	400		068253		068267							
TMG	125	400		068254		068268							
TMG	160	480		068255		068269							
TMG	200	600		068256		068270							
TMG	250	750		068257		068271							

XT3 250 TMG - Fixed (F) - 4 poles - Front terminals (F)

Thermomagnetic trip unit - TMG			Icu (415V)	1SDA...R1									
				N		S							
	In	I_3		36kA		50kA							
TMG	63	400		068258		068272							
TMG	80	400		068259		068273							
TMG	100	400		068260		068274							
TMG	125	400		068261		068275							
TMG	160	480		068262		068276							
TMG	200	600		068263		068277							
TMG	250	750		068264		068278							

Ordering codes for XT3

Circuit-breakers

XT3 circuit-breaker

XT3 250 MA - Fixed (F) - 3 poles - Front terminals (F)

Thermomagnetic trip unit - MA			Icu (415V)	1SDA...R1									
				N		S							
	In	I_3		36kA		50kA							
MA	100	600...1200		068071		068279							
MA	125	750...1500		068072		068280							
MA	160	960...1920		068073		068281							
MA	200	1200...2400		068074		068282							

XT3D switch-disconnector

XT3D - Switch-disconnector

	1SDA...R1			
	3 poles		4 poles	
XT3D	068210		068211	

Ordering codes for XT3

Accessories

Fixed parts, conversion kit and accessories for fixed parts

Fixed part of plug-in

Fixed part of plug-in (P)

Type	1SDA...R1	
	3 poles	4 poles
Kit P PF EF	068192	068194
Kit P PF HR/VR[1]	068193	068195

[1] The terminals are factory-mounted in the horizontal position (HR)

Terminals for the fixed parts

Type	1SDA...R1	
	3 pcs	4 pcs
EF - Front Extended Terminals	066264	066265
R - Rear Terminals HR/VR	066272	066273
PS - Rear phase separators 90mm	068953	068954

Conversion kit for turning a fixed circuit-breaker into the moving part of a plug-in circuit-breaker

Conversion Kit of the circuit-breaker from fixed into moving part of plug-in

Type	1SDA...R1	
	3 poles	4 poles
P MP KIT	066280	066281

Fixed part adapter

Adapter for mounting the terminals of the fixed circuit-breaker on the fixed part

Type	1SDA...R1	
	3 poles	4 poles
ADP adapter fixed part (2 pieces)	066309	066310

Service releases

SOR uncabled

SOR cabled

Shunt Opening release -SOR-

Type	1SDA...R1
Uncabled Version	
SOR 12V DC	066313
SOR 24-30V AC/DC	066314
SOR 48-60V AC/DC	066315
SOR 110...127V AC / 110...125V DC	066316
SOR 220...240V AC / 220...250V DC	066317
SOR 380-440V AC	066318
SOR 480-525V AC	066319
Cabled Version	
SOR-C 12V DC	066321
SOR-C 24-30V AC/DC	066322
SOR-C 48-60V AC/DC	066323
SOR-C 110-127V AC / 110-125V DC	066324
SOR-C 220-240V AC / 220-250V DC	066325
SOR-C 380-440V AC	066326
SOR-C 480-525V AC	066327

Ordering codes for XT3

Accessories

PS-SOR uncabled

PS-SOR cabled

Shunt Opening release with permanent operation -PS -SOR-

Type	1SDA...R1	
Uncabled Version		
PS-SOR 24-30V AC/DC	066336	
PS-SOR 48-60V AC/DC	066337	
PS-SOR 110...127V AC / 110...125V DC	066338	
PS-SOR 220...240V AC / 220...250V DC	066339	
PS-SOR 380-440V AC	066340	
PS-SOR 480-525V AC	066341	
Cabled Version		
PS-SOR-C 24-30V AC/DC	066343	
PS-SOR-C 48-60V AC/DC	066344	
PS-SOR-C 110-127V AC / 110-125V DC	066345	
PS-SOR-C 220-240V AC / 220-250V DC	066346	
PS-SOR-C 380-440V AC	066347	
PS-SOR-C 480-525V AC	066348	

UVR uncabled

UVR cabled

Undervoltage release -UVR-

Type	1SDA...R1	
Uncabled Version		
UVR 24-30V AC/DC	066389	
UVR 48V AC/DC	069064	
UVR 60V AC/DC	066390	
UVR 110...127V AC - 110...125V DC	066391	
UVR 220...240V AC - 220...250V DC	066392	
UVR 380-440V AC	066393	
UVR 480-525V AC	066394	
Cabled Version		
UVR-C 24-30V AC/DC	066396	
UVR-C 48V AC/DC	069065	
UVR-C 60V AC/DC	066397	
UVR-C 110-127V AC - 110-125V DC	066398	
UVR-C 220-240V AC - 220-250V DC	066399	
UVR-C 380-440V AC	066400	
UVR-C 480-525V AC	066401	

Time delay device for undervoltage release

Delay device for undervoltage release -UVD-

Type	1SDA...R1	
UVD 24...30V AC/DC	051357	
UVD 48...60V AC/DC	051358	
UVD 110...125V AC/DC	051360	
UVD 220...250V AC/DC	051361	

Connectors

Socket-plug panel connector

Socket Plug Connector on rear of panel	
Type	**1SDA...R1**
Socket-plug panel connector with 3PINS	066409
Socket-plug panel connector with 6PINS	066410
Socket-plug panel connector with 9PINS	066411
Socket-plug panel connector with 15PINS	066412

Electrical signals

AUX uncabled

AUX cabled

Auxiliary Contacts -AUX-	
Type	**1SDA...R1**
Uncabled Version	
AUX 24V DC	066423
AUX 250V AC	066422
Cabled Version	
AUX-C 1Q+1SY 24V DC	066446
AUX-C 3Q+1SY 24V AC	066448
AUX-C 1Q+1SY 250V AC	066431
AUX-C 2Q+1SY 250V AC	066433
AUX-C 3Q 250V AC Left	066428
AUX-C 3Q+1SY 250V AC	066434

AUP - Auxiliary position contacts

Auxiliary position contacts -AUP-	
Type	**1SDA...R1**
Cabled Version	
AUP-I – Four Racked-in contacts 250V AC for plug-in circuit-breaker	066450
AUP-I – Four Racked-in contacts 24V DC for plug-in circuit-breaker	066451

AUE - Early auxiliary contacts

Early auxiliary contacts -AUE-	
Type	**1SDA...R1**
AUE – Two contacts in the rotary handle RHx (closed)	066454
AUE – Two contacts in the rotary handle RHx (open)	067118

Ordering codes for XT3

Accessories

Motor Operators

Motor operator

Motor operator with direct action -MOD-		
Type	1SDA...R1	
MOD 24V DC	066457	
MOD 48...60V DC	066458	
MOD 110...125V AC/DC	066459	
MOD 220...250V AC/DC	066460	
MOD 380...440V AC	066461	
MOD 480...525V AC	066462	

Rotary Handle Operating Mechanism

Rotary Handles

Transmitted rotary handle

Rotary Handles		
Type	1SDA...R1	
Rotary Handle Operating Mechanism		
RHD Normal Direct Handle	066475	
RHD Direct Emergency Handle	066477	
RHE Normal Transmitted Handle	066479	
RHE Emergency Transmitted Handle	066481	
RHS-L Normal left lateral handle	066579	
RHS-L Large left lateral handle	066580	
RHS-R Normal right lateral handle	066581	
RHS-R Large right lateral handle	066582	
Transmitted Handle Spare Parts		
RHE_B Base for Transmitted Handle	066483	
RHE_S Rod of 500mm	066576	
RHE_H Normal Transmitted Handle	066577	
RHE_H Emergency Transmitted Handle	066578	
LH Normal large handle	066583	
LH Large emergency handle	066585	

IP54

IP54 Protection for transmitted rotary handle		
Type	1SDA...R1	
IP54 Protection for transmitted handle -RHE-	066587	

Locks

Fixed padlock

Padlock on the circuit-breaker

Type	1SDA...R1
PLL Removable lock with padlocks in open position	066588
PLL Fixed lock with padlocks in open position	066589
PLL Fixed lock with padlocks in open/closed position	066591

Key lock on the circuit-breaker

Key lock on the circuit-breaker

Type	1SDA...R1
KLC Ronis key lock open, different keys, removable in open position	066605
KLC Ronis key lock open, same Type A keys, removable in open position	066606
KLC Ronis key lock open, same Type B keys, removable in open position	066607
KLC Ronis key lock open, same Type C keys, removable in open position	066608
KLC Ronis key lock open, same Type D keys, removable in open position	066609
KLC Ronis key lock open, same keys, removable in both position	066610

Key lock on the handle

Key lock on the handle

Type	1SDA...R1
RHL Ronis key lock open, different keys	066617
RHL Ronis key lock open, same Type A keys	066618
RHL Ronis key lock open, same Type B keys	066619
RHL Ronis key lock open, same Type C keys	066620
RHL Ronis key lock open, same Type D keys	066621
RHL Ronis key lock open/closed, different keys	066622

Key lock on the motor

Key lock on the motor

Type	1SDA...R1
MOL-D Ronis key lock open, different keys	066623
MOL-S Ronis key lock open, same Type A keys	066624
MOL-S Ronis key lock open, same Type B keys	066625
MOL-S Ronis key lock open, same Type C keys	066626
MOL-S Ronis key lock open, same Type D keys	066627

Interlock

Mechanical interlock

Type	1SDA...R1
MIR-H	066637
MIR-V	066638
Plate XT1 F	066639
Plate XT1 P	066640
Plate XT3 F	066643
Plate XT3 P	066644

Sealable Lock of Thermal Setting

Type	1SDA...R1
Lock on thermal setting for TMD trip unit	066651

Ordering codes for XT3

Accessories

Residual current devices

RC Inst / RC Sel

Residual current devices				
Type	1SDA...R1			
	3 poles		4 poles	
RC Inst	067127		067129	
RC Sel	067128		067130	
RC B Type			067132	

Panel type residual current relay		
Type	1SDA...R1	
RCQ020/A 115-230V AC	065979	
RCQ020/A 415V AC	065980	
Toroid closed Ø 60mm	037394	
Toroid closed Ø 110mm	037395	
Toroid closed Ø 185mm	050543	

Installation

DIN Guide

Bracket for fixing onto DIN rail				
Type	1SDA...R1			
	3 poles		4 poles	
DIN50022 KIT	066652		066652	
DIN50022 XT3+RC Inst / RC Sel	067139		067139	

Terminals, terminal covers, phase separators

Terminal covers

Insulating terminal covers				
Type	1SDA...R1			
	3 poles		4 poles	
LTC Low terminal covers	066660		066661	
HTC High terminal covers	066668		066669	

Sealable screw

Sealable screws for terminal covers		
Type	1SDA...R1	
Kit (2 pcs) sealable screws	066672	

Phase separators

Phase separators				
Type	1SDA...R1			
	4 pcs		6 pcs	
PB Height 25mm				
PB Height100mm	066676		066681	
PB Height 200mm	066678		066683	

EF Terminal

FCCuAl Terminal

Terminals

Type	1SDA...R1			
	3 pcs	4 pcs	6 pcs	8 pcs
F Front Terminals	066857	066858	066859	066860
EF Extetnded front terminals	066873	066874	066875	066876
ES Extended spread front terminals	066897	066898	066899	066900
FC CuAl terminals for CuAl cables 1x70...185mm^2	067179	067180	067181	067182
FC CuAl terminals for CuAl cables 1x150...240mm^2 + ADP	067183	067184	067185	067186
FC CuAl terminals for CuAl cables 2x35...150mm^2	067187	067188	067189	067190
FC Cu terminali for Cu cables	066913	066914	066915	066916
MC Multi-cable Terminals 6x2.5...35mm^2	066929	066930	066931	066932
R Rear adjustable terminals	066945	066946	066947	066948
FB Flexibar Terminals	066965	066966	066967	066968

Automatic transfer devices

ATS021

ATS021- ATS022 Automatic transfer devices

Type	1SDA...R1
ATS021	065523
ATS022	065524

Spare parts

Type	1SDA...R1
SA RC Sel/RC Inst/RC B Type - Opening solenoid of the residual current device	066992
SA RC B Type - Opening solenoid of the residual current device	067208
AUX-C - Loose uncabled Auxiliary Contact 250V[1]	066994
AUX-C - Loose cabled auxiliary contact 24V[1]	066996

[1] un-numbered cables

Flange

Flange for Compartment door

Type	1SDA...R1	
	3 poles	4 poles
Small flange for Circuit-breaker	068657	068657
Large flange for Circuit-breaker	068644	068645
Flange for MOD	068648	068648
Flange for direct handle RHD	068651	068651
Flange for residual current RC Sel/RC Inst	068655	068656

Ordering codes for XT4

Circuit-breakers

XT4 circuit-breaker

XT4 160 TMD/TMA - Fixed (F) - 3 poles - Front terminals (F)

Thermomagnetic trip unit - TMD/TMA			Icu (415V)	1SDA...R1				
				N	S	H	L	V
	In	I_3		36kA	50kA	70kA	120kA	150kA
TMD	16	300		068076	068299	068332	068365	068398
TMD	20	300		068080	068300	068333	068366	068399
TMD	25	300		068081	068301	068334	068367	068400
TMD	32	320		068082	068302	068335	068368	068401
TMA	40	400		068083	068303	068336	068369	068402
TMA	50	500		068084	068304	068337	068370	068403
TMA	63	630		068085	068305	068338	068371	068404
TMA	80	800		068086	068306	068339	068372	068405
TMA	100	1000		068087	068307	068340	068373	068406
TMA	125	1250		068088	068308	068341	068374	068407
TMA	160	1600		068089	068309	068342	068375	068408

XT4 250 TMD/TMA - Fixed (F) - 3 poles - Front terminals (F)

Thermomagnetic trip unit - TMD/TMA			Icu (415V)	1SDA...R1				
				N	S	H	L	V
	In	I_3		36kA	50kA	70kA	120kA	150kA
TMA	200	2000		068090	068310	068343	068376	068409
TMA	225	2250		068091	068311	068344	068377	068410
TMA	250	2500		068092	068312	068345	068378	068411

XT4 160 TMD/TMA - Fixed (F) - 4 poles - Front terminals (F)

Thermomagnetic trip unit - TMD/TMA			Icu (415V)	1SDA...R1				
				N	S	H	L	V
	In	I_3		36kA	50kA	70kA	120kA	150kA
TMD	16	300		068093	068313	068346	068379	068412
TMD	20	300		068094	068314	068347	068380	068413
TMD	25	300		068095	068315	068348	068381	068414
TMD	32	320		068096	068316	068349	068382	068415
TMA	40	400		068097	068317	068350	068383	068416
TMA	50	500		068098	068318	068351	068384	068417
TMA	63	630		068099	068319	068352	068385	068418
TMA	80	800		068100	068320	068353	068386	068419
TMA	100	1000		068101	068321	068354	068387	068420
TMA In N=50%	125	1250		068102	068322	068355	068388	068421
TMA In N=50%	160	1600		068103	068323	068356	068389	068422
TMA In N=50%	200	2000		068104	068324	068357	068390	068423
TMA In N=50%	225	2250		068105	068325	068358	068391	068424
TMA In N=50%	250	2500		068106	068326	068359	068392	068425
TMA In N=100%	125	1250		068107	068327	068360	068393	068426
TMA In N=100%	160	1600		068108	068328	068361	068394	068427

XT4 250 TMD/TMA - Fixed (F) - 4 poles - Front terminals (F)

Thermomagnetic trip unit - TMD/TMA			Icu (415V)	1SDA...R1				
				N	S	H	L	V
	In	I_3		36kA	50kA	70kA	120kA	150kA
TMA In N=100%	200	2000		068109	068329	068362	068395	068428
TMA In N=100%	225	2250		068110	068330	068363	068396	068429
TMA In N=100%	250	2500		068111	068331	068364	068397	068430

XT4 circuit-breaker

XT4 160 MA - Fixed (F) - 3 poles - Front terminals (F)

Thermomagnetic trip unit - MA			Icu (415V)	1SDA...R1				
				N	S	H	L	V
	In	I_3		36kA	50kA	70kA	120kA	150kA
MA	10[1]	50...100		068112	068431	068441	068451	068461
MA	12.5[1]	62.5...125		068113	068432	068442	068452	068462
MA	20	100...200		068114	068433	068443	068453	068463
MA	32	160...320		068115	068434	068444	068454	068464
MA	52	260...520		068116	068435	068445	068455	068465
MA	80	400...800		068117	068436	068446	068456	068466
MA	100	500...1000		068118	068437	068447	068457	068467
MA	125	625...1250		068119	068438	068448	068458	068468
MA	160	800...1600		068120	068439	068449	068459	068469

[1] Available stortly, please ask ABB SACE

XT4 250 MA - Fixed (F) - 3 poles - Front terminals (F)

Thermomagnetic trip unit - MA			Icu (415V)	1SDA...R1				
				N	S	H	L	V
	In	I_3		36kA	50kA	70kA	120kA	150kA
MA	200	1000...2000		068121	068440	068450	068460	068470

XT4 160 Ekip LS/I - Fixed (F) - 3 poles - Front terminals (F)

Electronic trip unit - Ekip LS/I		Icu (415V)	1SDA...R1				
			N	S	H	L	V
	In		36kA	50kA	70kA	120kA	150kA
Ekip LS/I	40		068122	068471	068511	068551	068591
Ekip LS/I	63		068123	068472	068512	068552	068592
Ekip LS/I	100		068124	068473	068513	068553	068593
Ekip LS/I	160		068125	068474	068514	068554	068594

XT4 250 Ekip LS/I - Fixed (F) - 3 poles - Front terminals (F)

Electronic trip unit - Ekip LS/I		Icu (415V)	1SDA...R1				
			N	S	H	L	V
	In		36kA	50kA	70kA	120kA	150kA
Ekip LS/I	250		068126	068475	068515	068555	068595

XT4 160 Ekip I - Fixed (F) - 3 poles - Front terminals (F)

Electronic trip unit - Ekip I		Icu (415V)	1SDA...R1				
			N	S	H	L	V
	In		36kA	50kA	70kA	120kA	150kA
Ekip I	40		068127	068476	068516	068556	068596
Ekip I	63		068128	068477	068517	068557	068597
Ekip I	100		068129	068478	068518	068558	068598
Ekip I	160		068130	068479	068519	068559	068599

XT4 250 Ekip I - Fixed (F) - 3 poles - Front terminals (F)

Electronic trip unit - Ekip I		Icu (415V)	1SDA...R1				
			N	S	H	L	V
	In		36kA	50kA	70kA	120kA	150kA
Ekip I	250		068131	068480	068520	068560	068600

Ordering codes for XT4

Circuit-breakers

XT4 circuit-breaker

XT4 160 Ekip LSI - Fixed (F) - 3 poles - Front terminals (F)

Electronic trip unit - Ekip LSI	In	Icu (415V)	1SDA...R1 N	S	H	L	V
			36kA	50kA	70kA	120kA	150kA
Ekip LSI	40		068132	068481	068521	068561	068601
Ekip LSI	63		068133	068482	068522	068562	068602
Ekip LSI	100		068134	068483	068523	068563	068603
Ekip LSI	160		068135	068484	068524	068564	068604

XT4 250 Ekip LSI - Fixed (F) - 3 poles - Front terminals (F)

Electronic trip unit - Ekip LSI	In	Icu (415V)	1SDA...R1 N	S	H	L	V
			36kA	50kA	70kA	120kA	150kA
Ekip LSI	250		068136	068485	068525	068565	068605

XT4 160 Ekip LSIG - Fixed (F) - 3 poles - Front terminals (F)

Electronic trip unit - Ekip LSIG	In	Icu (415V)	1SDA...R1 N	S	H	L	V
			36kA	50kA	70kA	120kA	150kA
Ekip LSIG	40		068137	068486	068526	068566	068606
Ekip LSIG	63		068138	068487	068527	068567	068607
Ekip LSIG	100		068139	068488	068528	068568	068608
Ekip LSIG	160		068140	068489	068529	068569	068609

XT4 250 Ekip LSIG - Fixed (F) - 3 poles - Front terminals (F)

Electronic trip unit - Ekip LSIG	In	Icu (415V)	1SDA...R1 N	S	H	L	V
			36kA	50kA	70kA	120kA	150kA
Ekip LSIG	250		068141	068490	068530	068570	068610

XT4 160 Ekip LS/I - Fixed (F) - 4 poles - Front terminals (F)

Electronic trip unit - Ekip LS/I	In	Icu (415V)	1SDA...R1 N	S	H	L	V
			36kA	50kA	70kA	120kA	150kA
Ekip LS/I	40		068142	068491	068531	068571	068611
Ekip LS/I	63		068144	068492	068532	068572	068612
Ekip LS/I	100		068145	068493	068533	068573	068613
Ekip LS/I	160		068146	068494	068534	068574	068614

XT4 250 Ekip LS/I - Fixed (F) - 4 poles - Front terminals (F)

Electronic trip unit - Ekip LS/I	In	Icu (415V)	1SDA...R1 N	S	H	L	V
			36kA	50kA	70kA	120kA	150kA
Ekip LS/I	250		068147	068495	068535	068575	068615

XT4 circuit-breaker

XT4 160 Ekip I - Fixed (F) - 4 poles - Front terminals (F)

Electronic trip unit - Ekip I		Icu (415V)	1SDA...R1				
			N	S	H	L	V
	In		36kA	50kA	70kA	120kA	150kA
Ekip I	40		068148	068496	068536	068576	068616
Ekip I	63		068149	068497	068537	068577	068617
Ekip I	100		068150	068498	068538	068578	068618
Ekip I	160		068151	068499	068539	068579	068619

XT4 250 Ekip I - Fixed (F) - 4 poles - Front terminals (F)

Electronic trip unit - Ekip I		Icu (415V)	1SDA...R1				
			N	S	H	L	V
	In		36kA	50kA	70kA	120kA	150kA
Ekip I	250		068152	068500	068540	068580	068620

XT4 160 Ekip LSI - Fixed (F) - 4 poles - Front terminals (F)

Electronic trip unit - Ekip LSI		Icu (415V)	1SDA...R1				
			N	S	H	L	V
	In		36kA	50kA	70kA	120kA	150kA
Ekip LSI	40		068153	068501	068541	068581	068621
Ekip LSI	63		068154	068502	068542	068582	068622
Ekip LSI	100		068155	068503	068543	068583	068623
Ekip LSI	160		068156	068504	068544	068584	068624

XT4 250 Ekip LSI - Fixed (F) - 4 poles - Front terminals (F)

Electronic trip unit - Ekip LSI		Icu (415V)	1SDA...R1				
			N	S	H	L	V
	In		36kA	50kA	70kA	120kA	150kA
Ekip LSI	250		068157	068505	068545	068585	068625

XT4 160 Ekip LSIG - Fixed (F) - 4 poles - Front terminals (F)

Electronic trip unit - Ekip LSIG		Icu (415V)	1SDA...R1				
			N	S	H	L	V
	In		36kA	50kA	70kA	120kA	150kA
Ekip LSIG	40		068158	068506	068546	068586	068626
Ekip LSIG	63		068159	068507	068547	068587	068627
Ekip LSIG	100		068160	068508	068548	068588	068628
Ekip LSIG	160		068161	068509	068549	068589	068629

XT4 250 Ekip LSIG - Fixed (F) - 4 poles - Front terminals (F)

Electronic trip unit - Ekip LSIG		Icu (415V)	1SDA...R1				
			N	S	H	L	V
	In		36kA	50kA	70kA	120kA	150kA
Ekip LSIG	250		068162	068510	068550	068590	068630

XT4D switch-disconnector

XT4 D - Switch-disconnector

	1SDA...R1	
	3 poles	4 poles
	20kA	20kA
XT4 D	068212	068213

Ordering codes for XT4

Circuit-breakers

XT4 160 - Breaking part

	1SDA...R1				
	N	S	H	L	V
3 poles	068289	068290	068291	068292	068293
4 poles	068294	068295	068296	068297	068298

XT4 250 - Breaking part

	1SDA...R1				
	N	S	H	L	V
3 poles	068173	068174	068175	068176	068177
4 poles	068178	068179	068180	068181	068182

Loose trip units

Loose trip units XT4

Thermomagnetic - TMD/TMA			1SDA...R1	
			3 poles	4 poles
	In	I_3		
TMD	16	300	067377	067465
TMD	20	300	067378	067468
TMD	25	300	067379	067469
TMD	32	320	067380	067470
TMA	40	400	067381	067471
TMA	50	500	067382	067472
TMA	63	630	067383	067473
TMA	80	800	067384	067474
TMA	100	1000	067385	067475
TMA	125	1250	067386	067481
TMA	160	1600	067387	067482
TMA	200	2000	067388	067483
TMA	225	2250	067389	067484
TMA	250	2500	067390	067485
TMA In N=50%	125	1250		067476
TMA In N=50%	160	1600		067477
TMA In N=50%	200	2000		067478
TMA In N=50%	225	2250		067479
TMA In N=50%	250	2500		067480

Loose trip units XT4

Thermomagnetic - MA			1SDA...R1
			3 poles
	In	I_3	
MA	20	100...200	067490
MA	32	160...320	067491
MA	52	260...520	067492
MA	80	400...800	067493
MA	100	500...1000	067494
MA	125	625...1250	067495
MA	160	800...1600	067496
MA	200	1000...2000	067497

Loose trip units

Loose trip units XT4						
Electronic - Ekip LS/I			1SDA...R1			
			3 poles		4 poles	
	In					
Ekip LS/I	40		067498		067518	
Ekip LS/I	63		067499		067519	
Ekip LS/I	100		067500		067520	
Ekip LS/I	160		067501		067521	
Ekip LS/I	250		067502		067522	

Loose trip units XT4						
Electronic - Ekip I			1SDA...R1			
			3 poles		4 poles	
	In					
Ekip I	40		067503		067523	
Ekip I	63		067504		067524	
Ekip I	100		067505		067525	
Ekip I	160		067506		067526	
Ekip I	250		067507		067527	

Loose trip units XT4						
Electronic - Ekip LSI			1SDA...R1			
			3 poles		4 poles	
	In					
Ekip LSI	40		067508		067528	
Ekip LSI	63		067509		067529	
Ekip LSI	100		067510		067530	
Ekip LSI	160		067511		067531	
Ekip LSI	250		067512		067532	

Loose trip units XT4						
Electronic - Ekip LSIG			1SDA...R1			
			3 poles		4 poles	
	In					
Ekip LSIG	40		067513		067533	
Ekip LSIG	63		067514		067534	
Ekip LSIG	100		067515		067535	
Ekip LSIG	160		067516		067536	
Ekip LSIG	250		067517		067537	

Ordering codes for XT4

Circuit-breakers

Loose trip units

Loose trip units XT4

Electronic - Ekip M-LIU			1SDA...R1			
			3 poles			
	In					
Ekip M-LIU	40		068028			
Ekip M-LIU	63		068029			
Ekip M-LIU	100		068030			
Ekip M-LIU	160		068031			

Loose trip units XT4

Electronic - Ekip M-LRIU			1SDA...R1			
			3 poles			
	In					
Ekip M-LRIU	40		068033			
Ekip M-LRIU	63		068034			
Ekip M-LRIU	100		068035			
Ekip M-LRIU	160		068036			

Loose trip units XT4

Electronic - Ekip G-LS/I			1SDA...R1			
			3 poles		4 poles	
	In					
Ekip G-LS/I	40		068038		068043	
Ekip G-LS/I	63		068039		068044	
Ekip G-LS/I	100		068040		068045	
Ekip G-LS/I	160		068041		068046	
Ekip G-LS/I	250		068042		068047	

Loose trip units XT4

Electronic - Ekip N LS/I			1SDA...R1			
					4 poles	
	In					
Ekip N LS/I	40				068048	
Ekip N LS/I	63				068049	
Ekip N LS/I	100				068050	
Ekip N LS/I	160				068051	

Ordering codes for XT4

Accessories

Fixed part of plug-in

Fixed parts, conversion kit and accessories for fixed parts

Fixed part of plug-in (P)

Type	1SDA...R1	
	3 poles	4 poles
Kit P PF EF	068196	068198
Kit P PF HR/VR[1]	068197	068199

[1] The terminals are factory-mounted in the horizontal position (HR)

Fixed part of withdrawable

Fixed part of withdrawable (W)

Type	1SDA...R1	
	3 poles	4 poles
Kit W PF EF	068204	068206
Kit W PF HR/VR[1]	068205	068207

[1] The terminals are factory-mounted in the horizontal position (HR)

Terminals for the fixed parts

Type	1SDA...R1	
	3 pcs	4 pcs
EF - Front Extended Terminals	066266	066267
R - Rear Terminals HR/VR	066274	066275
PS - Rear phase separators 90mm	068953	068954

Conversion kit for turning a fixed circuit-breaker into the moving part of a plug-in circuit-breaker

Conversion Kit of the circuit-breaker from fixed into moving part of plug-in

Type	1SDA...R1	
	3 pcs	4 pcs
P MP KIT	066282	066283

Conversion kit for turning a fixed circuit-breaker into the moving part of a withdrawable circuit-breaker

Conversion Kit of the circuit-breaker from fixed into moving part of withdrawable

Type	1SDA...R1	
	3 pcs	4 pcs
W MP KIT	066286	066287

Conversion Kit of the fixed part from plug-in to withdrawable

Type	1SDA...R1
	4 poles
FP P>W KIT	066289

Conversion Kit of RC from fixed to plug-in

Type	1SDA...R1
	4 poles
P MP RC Sel XT2 4p KIT	066291

Ordering codes for XT4

Accessories

Conversion Kit of RC from plug-in to withdrawable

Type	1SDA...R1	
	4 poles	
W MP RC Sel KIT	067115	

Key lock/padlock for fixed part

Key lock/padlock for fixed part of withdrawable

Type	1SDA...R1	
KL-D Key Lock FP, different keys	066293	
KL-S Key Lock FP, same keys N.20005	066294	

Ronis key lock/padlock for fixed part

Ronis key/padlock lock for fixed part of withdrawable

Type	1SDA...R1	
KL-D Ronis FP key lock, different keys	066298	
KL-S Ronis FP key lock, same Type A keys	066300	

Fixed part adapter

Adapter for mounting the terminals of the fixed circuit-breaker on the fixed part

Type	1SDA...R1			
	3 poles		4 poles	
ADP adapter fixed part (2 pieces)	066311		066312	

Service releases

SOR uncabled

SOR cabled

SOR for withdrawable

Shunt Opening release -SOR-

Type	1SDA...R1			
	Fixed/Plug-in		Withdrawable	
Uncabled Version				
SOR 12V DC	066313			
SOR 24-30V AC/DC	066314			
SOR 48-60V AC/DC	066315			
SOR 110...127V AC / 110...125V DC	066316			
SOR 220...240V AC / 220...250V DC	066317			
SOR 380-440V AC	066318			
SOR 480-525V AC	066319			
Cabled Version				
SOR-C 12V DC	066321		066328	
SOR-C 24-30V AC/DC	066322		066329	
SOR-C 48-60V AC/DC	066323		066330	
SOR-C 110-127V AC / 110-125V DC	066324		066331	
SOR-C 220-240V AC / 220-250V DC	066325		066332	
SOR-C 380-440V AC	066326		066333	
SOR-C 480-525V AC	066327		066334	

PS-SOR uncabled

PS-SOR cabled

PS-SOR for withdrawable

Shunt Opening release with permanent operation -PS -SOR-

Type	1SDA...R1			
	Fixed/Plug-in		Withdrawable	
Uncabled Version				
PS-SOR 24-30V AC/DC	066336			
PS-SOR 48-60V AC/DC	066337			
PS-SOR 110...127V AC / 110...125V DC	066338			
PS-SOR 220...240V AC / 220...250V DC	066339			
PS-SOR 380-440V AC	066340			
PS-SOR 480-525V AC	066341			
Cabled Version				
PS-SOR-C 24-30V AC/DC	066343		066350	
PS-SOR-C 48-60V AC/DC	066344		066351	
PS-SOR-C 110-127V AC / 110-125V DC	066345		066352	
PS-SOR-C 220-240V AC / 220-250V DC	066346		066354	
PS-SOR-C 380-440V AC	066347		066355	
PS-SOR-C 480-525V AC	066348		066356	

UVR uncabled

UVR cabled

SOR for withdrawable

Undervoltage release -UVR-

Type	1SDA...R1			
	Fixed/Plug-in		Withdrawable	
Uncabled Version				
UVR 24-30V AC/DC	066389			
UVR 48V AC/DC	069064			
UVR 60V AC/DC	066390			
UVR 110...127V AC / 110...125V DC	066391			
UVR 220...240V AC / 220...250V DC	066392			
UVR 380-440V AC	066393			
UVR 480-525V AC	066394			
Cabled Version				
UVR-C 24-30V AC/DC	066396		066403	
UVR-C 48V AC/DC	069065		060966	
UVR-C 60V AC/DC	066397		066404	
UVR-C 110-127V AC / 110-125V DC	066398		066405	
UVR-C 220-240V AC / 220-250V DC	066399		066406	
UVR-C 380-440V AC	066400		066407	
UVR-C 480-525V AC	066401		066408	

Time delay device for undervoltage release

Delay device for undervoltage release -UVD-

Type	1SDA...R1	
UVD 24...30V AC/DC	051357	
UVD 48...60V AC/DC	051358	
UVD 110...125V AC/DC	051360	
UVD 220...250V AC/DC	051361	

Ordering codes for XT4

Accessories

Connectors

Connector of fourth pole for withdrawable		
Type	1SDA...R1	
	Withdrawable	
Connector 4th Pole SOR-PS-SOR	066415	
Connector 4th Pole UVR	066418	

Socket-plug panel connector

Socket-Plug connector on rear of panel		
Type	1SDA...R1	
	Withdrawable	
Socket-plug panel connector with 3PINS	066409	
Socket-plug panel connector with 6PINS	066410	
Socket-plug panel connector with 9PINS	066411	
Socket-plug panel connector with 15PINS	066412	

Socket-plug connector of fixed part

Fixed part socket-plug connector		
Type	1SDA...R1	
Socket-plug connector of Moving Part 12PINS	066413	
Socket-plug connector of Fixed Part 12PINS	066414	

Electrical signals

AUX uncabled

AUX cabled

AUX for withdrawable

Auxiliary contacts -AUX-				
Type	1SDA...R1			
	Fixed/Plug-in		Withdrawable	
Uncabled Version				
AUX 24V DC	066423			
AUX-SA 24V DC	066425			
AUX 250V AC	066422			
AUX-SA 250V AC	066424			
Cabled Version				
AUX-C 1Q+1SY 24V DC	066446		066447	
AUX-C 3Q+1SY 24V DC	066448		066449	
AUX-SA-C 24V DC	067116		067117	
AUX-C 1Q+1SY 250V AC	066431		066432	
AUX-C 2Q+1SY 250V AC	066433			
AUX-C 2Q+2SY+1SY 250V AC	066438		066439	
AUX-C 3Q 250V AC Left	066427			
AUX-C 3Q+1SY 250V AC	066434		066435	
AUX-C 3Q+2SY 250V AC	066436		066437	
AUX-SA-C 250V AC	066429		066430	
AUX-C 1Q+1SY 400V AC	066444		066445	
AUX-C 2Q 400V AC	066440		066443	

AUP - Auxiliary position contacts

Auxiliary position contacts -AUP-		
Type	1SDA...R1	
Cabled Version		
AUP-I – Four Racked-in contacts 250V AC for plug-in/withdrawable circuit-breaker	066450	
AUP-I – Four Racked-in contacts 24V DC for plug-in/withdrawable circuit-breaker	066451	
AUP-R – Two Racked-out contacts 250V AC for withdrawable circuit-breaker	066452	
AUP-R – Two Racked-out contacts 24V DC for withdrawable circuit-breaker	066453	

AUE - Early auxiliary contacts

Early auxiliary contacts -AUE-				
Type	1SDA...R1			
	Fixed/Plug-in		Withdrawable	
AUE – Two contacts in the rotary handle RHx (open)	067118		067119	
AUE – Two contacts in the rotary handle RHx (closed)	066454		066455	
AUE – Two contacts in the circuit-breaker (open/closed)	066456			

Motor Operators

MOE - Motor operator

Stored energy motor operator MOE		
Type	1SDA...R1	
MOE 24V DC	066463	
MOE 48...60V DC	066464	
MOE 110...125V AC/DC	066465	
MOE 220...250V AC/DC	066466	
MOE 380...440V AC	066467	
MOE 480...525V AC	066468	

MOE-E - Electronic motor operator

Electronic stored energy motor operator MOE-E		
Type	1SDA...R1	
MOE-E 24V DC	066469	
MOE-E 48...60V DC	066470	
MOE-E 110...125V AC/DC	066471	
MOE-E 220...250V AC/DC	066472	
MOE-E 380...440V AC	066473	
MOE-E 480...525V AC	066474	

Ordering codes for XT4

Accessories

Rotary Handles

Direct handle

Transmitted handle

Rotary Handles		
Type	1SDA...R1	
	Fixed/Plug-in	Withdrawable
RHD Normal Direct Handle	069053	066476
RHD Direct Emergency Handle	069054	066478
RHE Normal Transmitted Handle	069055	066480
RHE Emergency Transmitted Handle	069056	066482
RHS L Normal Left Lateral Handle	069058	
RHS L Emergency Left Lateral Handle	069059	
RHS R Normal Right Lateral Handle	069060	
RHS R Emergency Right Lateral Handle	069061	
Transmitted Handle Spare Parts		
RHE_B Base for Transmitted Handle	069057	066484
RHE_S Rod of 500mm	066576	
RHE_H Normal Transmitted Handle	066577	
RHE_H Emergency Transmitted Handle	066578	
LH Wide Normal Handle	066583	
LH Wide Emergency Handle	066585	

IP54

IP54 Protection for transmitted rotary handle	
Type	1SDA...R1
IP54 protection for transmitted handle -RHE-	066587

Locks

Fixed padlock

Padlock on the circuit-breaker	
Type	1SDA...R1
PLL Fixed lock with padlocks in open position	066590
PLL Fixed lock with padlocks in open/closed position	066592

Key lock on the circuit-breaker

Key lock on the circuit-breaker

Type	1SDA...R1	
KLC Ronis key lock open, different keys, removable in open position	066599	
KLC Ronis key lock open, same Type A keys, removable in open position	066600	
KLC Ronis key lock open, same Type B keys, removable in open position	066601	
KLC Ronis key lock open, same Type C keys, removable in open position	066602	
KLC Ronis key lock open, same Type D keys, removable in open position	066603	
KLC Ronis key lock open, same keys, removable in both position	066604	

Key lock on the handle

Key lock on the handle

Type	1SDA...R1	
RHL Ronis key lock open, different keys	066617	
RHL Ronis key lock open, same Type A keys	066618	
RHL Ronis key lock open, same Type B keys	066619	
RHL Ronis key lock open, same Type C keys	066620	
RHL Ronis key lock open, same Type D keys	066621	
RHL Ronis key lock open/closed, different keys	066622	

Key lock on the motor

Key lock on the motor

Type	1SDA...R1	
MOL-D Ronis key lock open, different keys	066629	
MOL-S Ronis key lock open, same Type A keys	066630	
MOL-S Ronis key lock open, same Type B keys	066631	
MOL-S Ronis key lock open, same Type C keys	066632	
MOL-S Ronis key lock open, same Type D keys	066633	
MOL-M Key lock against manual operation	066634	

Front for locks

Front for FLD locks

Type	1SDA...R1			
	Fixed/Plug-in		Withdrawable	
Front for FLD locks	066635		066636	

Interlock

Mechanical interlock

Type	1SDA...R1	
MIR-H	066637	
MIR-V	066638	
Plate XT2 F	066641	
Plate XT2 P/W	066642	
Plate XT4 F	066645	
Plate XT4 P/W	066646	

Ordering codes for XT4

Accessories

Residual current devices

RC Sel

Residual current devices		
Type	1SDA...R1	
	4 poles	
RC Sel	067131	

Panel type residual current relay		
Type	1SDA...R1	
RCQ020/A 115-230V AC	065979	
RCQ020/A 415V AC	065980	
Toroid closed Ø 60mm	037394	
Toroid closed Ø 110mm	037395	
Toroid closed Ø 185mm	050543	

Installation

DIN Guide

Bracket for fixing onto DIN rail				
Type	1SDA...R1			
	3 poles		4 poles	
KIT DIN50022	066653		066653	

Terminals

Terminal cover

Insulating Terminal Covers				
Type	1SDA...R1			
	3 poles		4 poles	
LTC Low terminal covers	066662		066663	
HTC High terminal covers	066670		066671	

Sealable screw

Sealable screws for Terminal Covers		
Type	1SDA...R1	
	2 pcs	
Kit with two sealable screws	066672	

Phase separators

Phase Separators				
Type	1SDA...R1			
	4 pcs		6 pcs	
PB Height 25mm	069062		069063	
PB Height 100mm	066675		066680	
PB Height 200mm	066677		066682	

EF Terminal

FCCuAl Terminal

Terminals

Type	1SDA...R1			
	3 pcs	4 pcs	6 pcs	8 pcs
F Front Terminals	066861	066862	066863	066864
EF Extended front terminals	066877	066878	066879	066880
ES Extended spread front terminals	066901	066902	066903	066904
FC CuAl Terminals for CuAl cables 1x1...150mm^2	067191	067192	067193	067194
FC CuAl Terminals for CuAl cables 1x150...240mm^2 + ADP	067195	067196	067197	067198
FC CuAl Terminals for CuAl cables 2x35...150mm^2	067199	067200	067201	067202
FC Cu Terminals for Cu cables	066917	066918	066919	066920
MC Multi-cable Terminals 6x2.5...35mm^2	066933	066934	066935	066936
R Rear adjustable Terminals	066949	066950	066951	066952
FB Flexibar Terminals	066969	066970	066971	066972

Accessories for electronic trip units

Ekip Display

Ekip LED Meter

Type	1SDA...R1	
	Fixed/Plug-in	Withdrawable
Ekip Display	068659	068659
Ekip LED Meter	068660	068660
Ekip Com	068661	068662
PR212/CI Contactor control unit	050708	050708
EP010 Interface module	059469	059469
HMI030 Interface on front of panel	063143	063143

CT External neutral

Type	1SDA...R1
CT External neutral of 40A	066975
CT External neutral of 63A	066976
CT Neutro eesterno da 100A	066977
CT External neutral of 160A	066978
CT External neutral of 250A	066979

Kit of Electronic trip unit auxiliary Voltage

Type	1SDA...R1	
	Fixed/Plug-in	Withdrawable
KIT of 24V DC auxiliary voltage for electronic trip units	066980	066981
KIT for PTC Connection	066982	066983
KIT for Ext NE Connection	066984	066985
KIT for PR212/CI Connection	066986	066987

Ekip T&P unit

Test and Configuration Unit

Type	1SDA...R1
Ekip TT - Trip Test Unit	066988
Ekip T&P - Programming and test Unit	066989

Ordering codes for XT4

Accessories

Automatic transfer devices

ATS021

ATS021- ATS022 Automatic transfer devices		
Type	1SDA...R1	
ATS021	065523	
ATS022	065524	

Spare parts

Type	1SDA...R1			
	Fixed/Plug-in		Withdrawable	
SA RC Sel - Opening solenoid of the residual current device	067209		067210	
AUX-C -Loose cabled Auxiliary Contact 250V AC[1]	066994		066995	
AUX-C -Loose cabled Auxiliary Contact 24V DC[1]	066996		066997	

[1] un-numbered cables

Fixed/Moving part connector for withdrawable

Fixed Part Connector for Withdrawable		
Type	1SDA...R1	
1 connector for fixed part/moving part of withdrawable with 2 PINS for SOR/UVR up to 400V	067213	
1 connector for fixed part/moving part of withdrawable with 3 PINS for AUX up to 400V	067214	

Flange

Flange for Compartment door								
Type	1SDA...R1							
	3 poles		4 poles		3 poles		4 poles	
	Fixed/ Plug-in		Fixed/ Plug-in		With-drawable		With-drawable	
Small flange for circuit-breaker	068657		068657					
Large flange for circuit-breaker	068641		068642					
Flange for MOE/MOE-E/FLD	068649		068649		068650		068650	
Flange for direct handle RHD	068651		068651		068652		068652	
Flange for residual current RC Sel			066647				066648	

Glossary

Index

Circuit-breaker....8/2

Performance Parameters....8/4

Releases and Protections....8/6

Motor protection....8/9

Communication....8/10

Standards and Regulations....8/11

Symbols....8/12

ABB SACE documentation....8/13

Glossary

Circuit-breaker

G1.1 Circuit-breaker
Mechanical switching apparatus, able to close, carry and break currents in normal short-circuit condition and also close, carry for a specified time and break currents in specific abnormal circuit conditions such as that verified in case of short-circuit.

G1.2 Non-automatic circuit-breaker (switch-disconnector)
Mechanical switching device which, in the open position, complies with the specified requirements for the isolating function.

G1.3 Current-limiting circuit-breaker
Circuit-breaker with a break time short enough to prevent the short-circuit current from reaching the peak value it would otherwise reach.

G1.4 Rate of contact wear
Percentage of contact wear. Indicatively shows the state of electrical life of the circuit-breaker contacts.

G1.5 Double insulation
all the circuit-breakers in the SACE Tmax XT family have double insulation between the active power parts and the front parts of the apparatus where the operator works during normal plant service, so as to prevent the risk of contact with live parts. Each electrical accessory is completely segregated from the power circuit, and particularly the control assembly, which is completely isolated from the energised circuits. Moreover, the circuit-breaker has redundant insulation between both the internal live parts and the connection terminal area. The distances between connection terminals are greater than those required by the IEC Standards and conform to those established by the American regulations (UL 489 Standard).

G1.6 Positive operation
The operating lever always indicates the exact position of the circuit-breaker moving contacts:
- red line (I): Closed position;
- green line (O): Open position;
- yellow-green line: Trip position, open following tripping by the releases or test pushbutton.

The signals are precise and reliable, in compliance with the requirements established by the IEC 60073 and IEC 60417-2 Standards.
When the releases trip, the moving contacts automatically open and the lever moves to the Trip position; to reclose the circuit-breaker the latter must be reset by pushing the operating lever from the trip position to the Open position. From this position is possible re-closing the circuit-breaker.
The circuit-breaker operating mechanism is the free trip type and acts regardless of the pressure put on the lever or the speed of the operation.

G1.7 Isolation behaviour
Characteristic of a mechanical switching device which, in the open and trip position, carries out a disconnection function and provides a sufficient insulating distance (distance between contacts) to guarantee safety.

G1.8 Electromagnetic compatibility
In accordance with the IEC 60947-2 Standard (Annex B + Annex F, European Directive N° 89/336) concerning EMC electromagnetic compatibility, the Tmax family circuit-breakers used with electronic trip units and residual current releases are guaranteed for operation in the presence of interference caused by:
- electromagnetic equipment;
- atmospheric disturbance (static) flowing through the electrical networks;
- interference from radio waves;
- electrostatic discharges.

Moreover, the circuit-breakers do not generate disturbe to the other electronic devices situated in the vicinity of the installation site is generated.

G1.9 Tropicalization

All the Tmax XT series circuit-breakers can be used in the most critical environmental conditions defined by the following standards:

- IEC 60721-2-1 (climatogram 8);
- IEC 60068-2-30;
- IEC 60068-2-2;
- IEC 60068-2-52.

Tropicalization is guaranteed by:

- moulded-case made of synthetic resins reinforced with glass fiber;
- rust-preventive treatment on the main metal parts;
- Fe/Zn galvanisation (UNI ISO 2081), protected by a conversion layer free of hexavalent chrome (in compliance with ROHS) with the corrosion resistance guaranteed by ISO 4520 class 2c;
- application of anti-condensation protection for electronic trip units and relative accessories.

G1.10 Resistance to impact and vibrations

In compliance with IEC 60068-2-6 standards and with the regulations established by the most important classification bodies (RINA, Det Norske Veritas, Bureau Veritas, Lloyd's Register of Shipping, Germanischer Lloyd, ABS and the Russian Maritime Register of Shipping), all the Tmax circuit-breakers are unaffected by mechanically and electromagnetically generated vibrations.

G1.11 Degree of protection (IP)

The IP degree of protection indicates the level of protection of a device against contacts with live parts and penetration of foreign bodies of the liquid and solid type.

Glossary

Performance Parameters

G2.1 Size
Term that indicates a group of circuit-breakers with phisical dimension common to a nominal current size (same poles number).

G2.2 Rated uninterrupted current (In)
The rated uninterrupted current for a circuit-breaker is the current value, that the circuit-breaker can carry during uninterrupted service.

G2.3 Rated service current (Ie)
Current value defined by the manufacturer, which takes into account the rated service voltage at the rated frequency, the rated service, the utilisation category and the type of protective casing, if any.

G2.4 Rated service voltage (Ue)
The rated service voltage of a device is the voltage value which, along with the rated current value, determines the use of the device itself and which the applicable tests and utilisation category refer to.

G2.5 Rated insulation voltage (Ui)
The rated insulation voltage of a device is the voltage value to which the dielectric tests and surface insulation distances refer. In no case may the rated service voltage value exceed the rated insulation voltage.

G2.6 Rated impulse withstand voltage (Uimp)
Peak value of an impulse voltage of given shape and polarity that the device can withstand without faults under specified test conditions and to which the insulation clearances refer.

G2.7 Rated ultimate short-circuit breaking capacity (Icu)
The rated ultimate short-circuit breaking capacity of a circuit-breaker is the value of the short-circuit current the circuit-breaker is able to break twice (according to the O – t – CO cycle) at the corresponding rated operating voltage. The circuit-breaker is not required to carry its rated current after the opening and closing cycle.

G2.8 Rated service short-circuit breaking capacity (Ics)
The rated service short-circuit breaking capacity of a circuit-breaker is the current value the circuit-breaker is able to break three times according to a cycle of opening, pause and closing operations (O - t - CO - t - CO) at a given rated service voltage (Ue) and at a given power factor. After this cycle, the circuit-breaker must be able to carry its rated current.

G2.9 Rated short-time withstand current (Icw)
The rated short-time withstand current is the current value the circuit-breaker can carry in the closed position for a short time under specified conditions of service and behaviour. The circuit-breaker must be able to carry this current for as long as the established delay time lasts so as to guarantee selectivity among circuit-breakers installed in series.

G2.10 Rated short-circuit making capacity (Icm)
The rated short-circuit making capacity of a device is the value, declared by the manufacturer, that coincides with the rated service voltage, the rated frequency and with a specified alternating current power factor or direct current time constant. It is expressed as the maximum peak value of the prospective current under specified conditions.

G2.11 Utilisation category of circuit-breakers
The utilisation category of a circuit-breaker must be established according to whether it is specifically designed to achieve selectivity by means of an intentional delay or not, in relation to other devices installed in series on the load side, under short-circuit conditions.
It's possible to distinguish two user classes:
Class A - Circuit-breakers not specifically designed for selectivity under short-circuit conditions in relation to other protection devices installed in series on the load side, i.e. without intentional delay, applicable in short-circuit conditions and, therefore, without specification of the short-time withstand current.

Class B - Circuit-breakers specifically designed for selectivity under short-circuit conditions in relation to other protection devices installed in series on the load side, i.e. with an intentional delay (which can be adjusted), applicable under short-circuit conditions. The short-time withstand current is specified for these circuit-breakers (Icw).
A circuit-breaker belongs to category B if its Icw value exceeds:
- between 12In and 5kA, whichever is higher, for In≤2500A;
- 30kA for In>2500A.

G2.12 Utilisation category of non-automatic circuit-breakers

The utilisation category of non-automatic circuit-breakers establishes the type of condition of use.
It is identified by two letters, which indicate the type of circuit in which the device may be installed (AC for alternating current and DC for direct current), a two-digit number for the type of load that can be controlled and an additional letter (A or B), which indicates the operating frequency.
With reference to the utilisation categories, the product Standard establishes the current values the switch-disconnector must be able to break and interrupt under abnormal conditions.
The utilisation categories of non-automatic circuit-breakers are listed in the table below:

Nature of the current	Utilisation categories		
	Utilisation category		Typical applications
	Frequent operation	Infrequent operation	
Alternating current	AC-20A	AC-20B	Connection and disconnection under no-load conditions
	AC-21A	AC-21B	Connection and disconnection under no-load conditions
	AC-22A	AC-22B	Resistive load operation including moderate overloads
	AC-23A	AC-23B	Mixed resistive and inductive load operation including moderate overloads
Direct current	DC-20A	DC-20B	Operation of motors or other highly inductive loads
	DC-21A	DC-21B	Operation of resistive loads including moderate overloads
	DC-22A	DC-22B	Mixed resistive and inductive load operation including a moderate overload (e.g. motors with shunt)
	DC-23A	DC-23B	Operation of highly inductive loads

G2.13 Electrical life

The electrical life of a device indicates the number of on-load operating cycles and the resistance of the contacts to electrical wear under the conditions specified in the relative product Standard.

G2.14 Mechanical life

The mechanical life of a device indicates the number of no-load operating cycles (each operating cycle consists of a closing and opening operation) the device is able to carry out without overhauls or replacement of mechanical parts (routine maintenance is allowed).

G2.15 Dissipated power

This is the loss, caused by the joule effect, due to the electrical resistance of the circuit-breaker poles; the energy lost is dissipated in heat.

G2.16 Utilisation categories for operating parts

The utilisation categories given in the table are considered to be standard (CEI EN 60947-5-1).

Type of current	Class	Typical applications
AC	AC-12	Control of resistive loads and electronic loads with insulation obtained by use of optoinsulators
	AC-13	Control of electronic loads with insulation transformer
	AC-14	Control of small electromagnetic loads (≤72VA)
	AC-15	Control of electromagnetic loads (>72VA)
DC	DC-12	Control of resistive loads and electronic loads with insulation obtained by use of optoinsulators
	DC-13	Control of electromagnets
	DC-14	Control of electromagnetic loads with economiser resistors in the circuit

Glossary

Releases and Protections

G3.1 Release
Device, mechanically connected to a mechanical operating device, which frees the latching components and allows the operating device to be opened or closed.

G3.2 Thermomagnetic trip unit
Thermomagnetic trip units use a bimetal and an electromagnet to detect respectively overloads and short-circuits. They are suitable for protecting both alternating and direct current networks.

G3.3 Magnetic only trip unit
Device for protection against short-circuits which provides a higher magnetic trip threshold than the one available with a thermomagnetic circuit-breaker. The magnetic only release is better able to deal with any problems concerning the particularly high current the motor absorbs during the first instants of its starting phase.

G3.4 Electronic trip unit
Releases connected to current transformers (three or four, depending on the number of conductors to be protected) which, installed inside the circuit-breaker, provide the double function of supplying the power able to operate the release correctly (self-supply) and detecting the value of the current that passes through the live conductors. They are therefore only compatible with alternating current networks.
The signal from the transformers is processed by the electronic part (microprocessor), which compares it with the threshold settings. When the signal exceeds the thresholds, circuit-breaker release is controlled by means of an opening solenoid, which acts directly on the circuit-breaker control unit.
If there is an auxiliary power supply in addition to self-supply, the voltage value must be 24V DC ±20%.

G3.5 Residual current release
Device able to detect the earth fault current by means of a toroidal transformer which includes all the live conductors, as well as the neutral if distributed.
Residual current releases can be used in conjunction with the circuit-breaker to obtain two main functions in one single device:
- protection against overloads and short-circuits;
- protection against indirect contacts (voltage on conductive parts owing to loss of insulation).

G3.6 Magnetic protection
Protection against short-circuits with instantaneous trip.

G3.7 Thermal protection
Protection against overloads with inverse long-time delayed trip.

G3.8 Protection against Overloads (L)
Protection against overloads with long inverse time delay trip even with the trip curve established by the IEC 60255-3 Standard. Used in coordination with fuses and medium voltage protections.

G3.9 Protection against instantaneous short-circuit (I)
Provides instantaneous protection against short-circuits.

G3.10 Protection against delayed short-circuit (S)
Provides protection against short-circuit currents with delayed intervention at fixed time or inverse short time. Thanks to the delay setting, this device is particularly suitable when selective coordination must be achieved among the various different devices.

G3.11 Protection against earth faults (G)
Protection against earth faults with delayed fixed time of trip.

G3.12 Residual current protection (IΔn)
This function is particularly suitable when residual current protection is required for protection against indirect contacts.

G3.13 Protection of the neutral

Detection of overcurrents in the neutral conductor so as to break the phase conductors (neutral protected but not isolated) or to break the neutral conductor itself (neutral protected and isolated).

G3.14 Distribution systems

The distribution system establishes the status of the neutral in the power supply system and the method for connecting the conductive part towards earth.
The Italian standard, CEI 64-8/3 (which is aligned with the IEC 60364-3 international Standard), classifies electrical systems with a combination of two letters. The first indicates the situation of the power supply system towards earth:

- T direct earth connection of an alternating current point, generally the neutral;
- I earth insulation, or earth connection of a point, generally the neutral, by means of an impedance.

The second letter gives the situation of the conductive parts of the electrical installation in relation to the earth:

- T conductive parts directly earthed;
- N conductive parts connected to the earthing point of the power supply system.

Other letters may follow which indicate the arrangement of the neutral and protection conductors:

- S neutral and protection functions carried out by separate conductors;
- C neutral and protection functions carried out by a single conductor (PEN conductor).

The main distribution systems used are illustrated below with reference to these definitions.

G3.15 TT system

In the TT system, the neutral and conductive parts are connected to two electrically independent earthing systems.

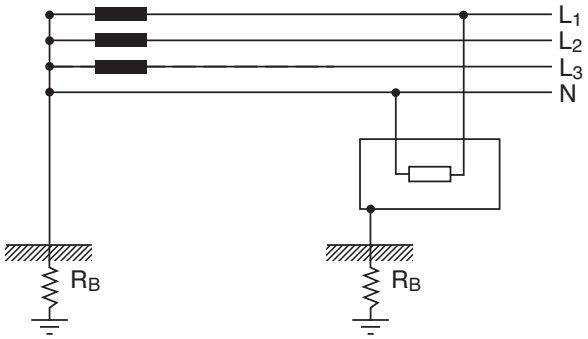

G3.16 TN system

In the TN system, the neutral is connected directly to the earth, while the conductive parts are connected to the same earthing system as the neutral.
The TN system is divided into three different types, depending on whether the neutral and protection conductors are separate or not:

1. TN-S: the neutral conductor N and the protection conductor PE are separate

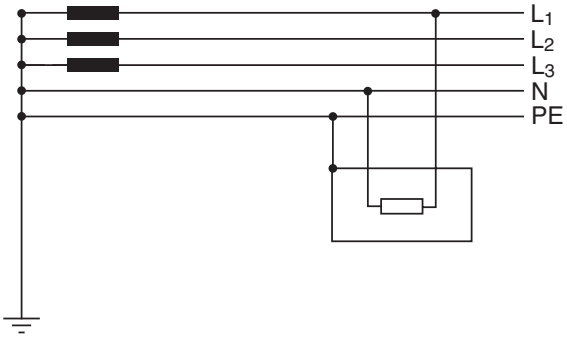

2. TN-C: the neutral and protection functions are combined in a single conductor called PEN

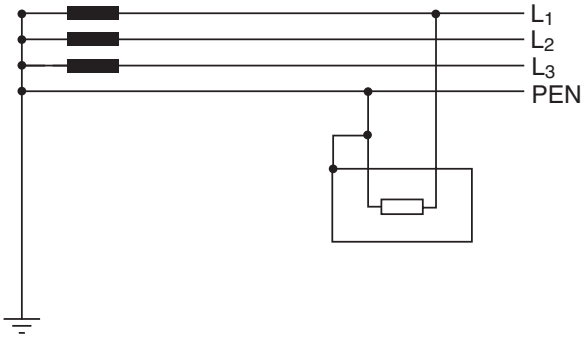

3. TN-C-S: the neutral and protection functions are partly combined in a single conductor called PEN and partly separate PE+N

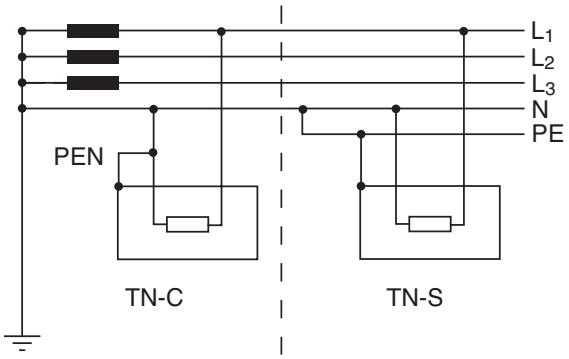

Consult QT3: “Distribution systems and protection against indirect contacts and earth faults” for further details.

G3.17 IT system

IT system have no active parts directly earthed, but may have live parts connected to earth through high value impedance. All the exposed-conductive-parts, separately or in group, are connected to an independent earth electrode.

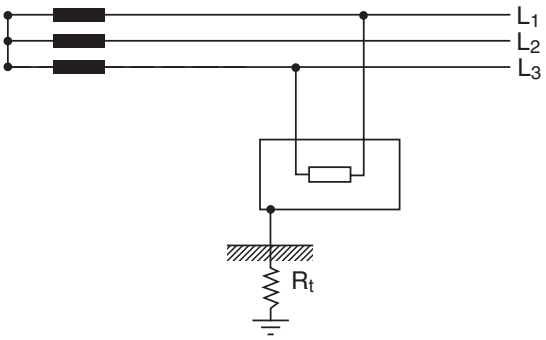

Glossary

Motor protection

G4.1 Protection against phase unbalance and phase loss (U)
Protection function which acts if unbalance between the current values of the individual phases protected by the circuit-breaker is detected (according to IEC 60947 annex T).

G4.2 Rotor lock protection (R)
The function protects motor from possible damages caused by rotor stopping during functioning.

G4.3 Starting current
Is the current value which, in accordance with the CEI EN 60947-4-1 Standard, is assigned a value of about 7.2xIe. It represents the current required by the motor during the starting phase, and which persists throughout the starting time.

G4.4 Starting time
This is the time the motor takes to reach its rated running speed. The starting time depends on the characteristics of the load the motor must drive, and particularly on the type of motor.

G4.5 Operating class
The starting classes distinguish the thermal relays according to their trip curves. The following table (which refers to the most common applications) lists the classes defined in the IEC60947-4-1 Standard.

Operating class	Trip time Ti [s] for 7.2xIr	Trip time Ti [s] for 7.2xIr (banda "E")
2	–	Ti ≤ 2
3	–	2 < Ti ≤ 3
5	0,5 < Ti ≤ 5	3 < Ti ≤ 5
10A	2 < Ti ≤ 10	–
10	4 < Ti ≤ 10	5 < Ti ≤ 10
20	6 < Ti ≤ 20	10 < Ti ≤ 20
30	9 < Ti ≤ 30	20 < Ti ≤ 30
40	–	30 < Ti ≤ 40

Time Ti is the cold trip time of the thermal relay at 7.2 times the set current value. It is common practice to associate class 10 with the normal starting type and class 30 with the heavy-duty starting type.
The other trip classes and trip time indicated under band "E", have recently been introduced in a variant to the CEI EN 60947-4-1 Standard, and are characterised by a more restricted trip range due to raising the minimum non-trip time.

(*) The load characteristics which the motor must carry, the type of motor and the starting methods, are factors which affect the starting time and therefore selection of the thermal trip unit.

G4.6 Contactor
Mechanical operating device with a single stand-by position and non-manual operation able to make, carry and break currents under normal circuit conditions, including overload operating conditions.

G4.7 Utilisation category of the contactor
The Standard establishes different utilisation categories for the contactor. Each category defines precise minimum performance values (e.g. application range or rated breaking capacity) according to current, voltage, power factor or time constant values and test conditions specified in the Standard.

G4.8 PTC
Thermostatic probe able to measure the internal temperature of an electric motor.

Consult QT7: The asynchronous three-phase motor, general information and ABB offer for coordinating the protections" for further details.

Glossary

Communication

G5.1 Communication protocol

Specification of standardized dialogue among several digital devices which exchange data. It is an operating mode based on the structure or length of binary words that must be common to all the elements that exchange data. Communication without dialogue protocol is not possible.

G5.2 Modbus RS485

This is a basic communication protocol, one of the most widespread standards in industrial automation and power distribution spheres.

G5.3 Network

A network generically consists of nodes interconnected with communication lines:

- the node (an “intelligent” device able to dialogue with other devices) is the data transmission and/or reception point;
- the communication line is the element that connects two nodes and represents the direct path the information takes in order to be transferred between two nodes. In practice, it is the physical means (coaxial cable, twisted telephone cable, optic fibre, infrared rays) along which the information and data travel.

G5.4 Bus network

The bus network structure is based on a common transmitting means (usually a twisted cable or coaxial cable) for all the nodes connected, therefore in parallel.

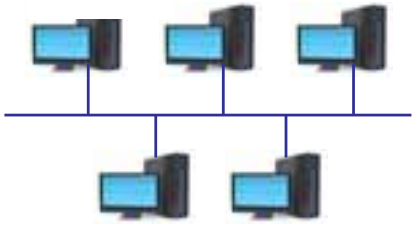

Consult QT9: “Communication with ABB circuit-breakers via Bus” for further details.

Glossary

Standards and Regulations

G6.1 Standards
Technical specification approved by a recognised organisation with the task of defining the state-of-the-art characteristics (dimensional, environmental, safety, etc.) of a product or service.

G6.2 Directive
Ensemble of rules which define the essential requirements regarding safety which the products must comply with in order to guarantee user safety.

G6.3 Naval Register
A Body able to certify a product/service as conforming to the regulations/criteria fixed internationally by the International Maritime Organization. The certification issued confirms that a ship is authorised to carry out the activity it was designed for.

G6.4 RoHS Directive
European Directive 2002/95/EC of 27 January 2003 (Decree Law 25 N° 151 of July 2005) aimed at eliminating or reducing the use of dangerous substances in electrical and electronic equipment. It requires manufacturers and companies to adapt to the relative provisions and to compile a manufacturer's declaration, without certification by third parties.

G6.5 CE marking
This is a mark that must be affixed to certain types of product by the manufacturer in order to self-certify correspondence (or conformity) with the essential requirements for marketing and use of that product in the European Union. The law requires this mark to be affixed on the product so that it can be marketed in the European Economic Area (EEA) member states.

Symbols

SYMBOL	DESCRIPTION
CB	Circuit-breaker
PF	Fixed part
PM	Mobile part
F Version	Circuit-breaker in fixed version
P Version	Circuit-breaker in plug-in version
W Version	Circuit-breaker in withdrawable version
F	Front terminals
EF	Front extended terminals
ES	Front extended spread terminals
FCCuAl	Terminal for copper/aluminium cables
FCCu	Terminal for copper cables
R	Rear terminals
HR/VR	Rear flat vertical/horizontal terminals
FB	Terminals for flexible busbars
MC	Multi-cable terminal
HTC	High terminal covers
LTC	Low terminal covers
PS	Phase separators
RHD	Direct rotary handle
RHE	Transmitted rotary handle
RHE-LH	Transmitted rotary handle with wide handgrip
RHS	Lateral rotary handle
FLD	Front for locks
PLL	Padlock device
KLC	Key lock
SOR or YO	Shunt opening release
PS-SOR or YO	Permanent shunt opening release
UVR or YU	Undervoltage release
UVD	Time-delay device for undervoltage release
AUX Q	Auxiliary contact in open/closed position
AUX SY	Auxiliary contact tripped
AUX S51	Release tripped auxiliary contact
SA	Opening solenoid of residual current device
AUP-I	Plugged-in auxiliary position contacts
AUP-E	Withdrawn auxiliary position contacts
AUE	Early auxiliary contacts on the handle
MOD	Direct action motor operator
MOE	Stored energy motor operator
MOE-E	Electronic motor operator
CB	Circuit-breaker
NE	External neutral
RHx	All the handles (RHD, RHE, RHE-UI, RHS)
3Q	Left open/closed auxiliary contacts
24V	24V auxiliary voltage
AUE inside	Early auxiliary contacts inside the circuit-breaker

ABB SACE documentation

The technical documentation is available on-line on BOL web site http://bol.it.abb.com in “Work tools - Technical guides” section:

– Technical Application Paper, volume 1	“Low voltage selectivity with ABB circuit-breakers”
– Technical Application Paper, volume 2	“MV/LV transformer substations: theory and example of short-circuit calculation”
– Technical Application Paper, volume 3	“Distribution system and protection against indirect contact and earth fault”
– Technical Application Paper, volume 4	“ABB circuit-breakers inside LV switchboards”
– Technical Application Paper, volume 5	“ABB circuit-breakers for direct current applications”
– Technical Application Paper, volume 6	“Arc-proof low voltage switchgear and controlgear assemblies”
– Technical Application Paper, volume 7	“Three-phase asynchronous motors. Generalities and ABB proposals for the coordination of protective devices”
– Technical Application Paper, volume 8	“ Power factor correction and harmonic filtering in electrical plants”
– Technical Application Paper, volume 9	“Bus communication with ABB circuit-breakers”

Notes

Notes

Notes

Notes

Notes

Notes

Contact us

ABB SACE
A division of ABB S.p.A.
L.V. Breakers
Via Baioni, 35
24123 Bergamo
Phone: +39 035.395.111
Fax: +39 035.395.306-433

www.abb.com

The data and illustrations are not binding. We reserve the right to modify the contents of this document on the basis of technical development of the product, without prior notice.

© Copyright 2010 ABB.
All rights reserved.

1SDC210033D0201 – 03/2010 – 7.000 – CAL

Power and productivity
for a better world™