General Specification

GS 01B08D02-01EN

YS1310
Indicator with Alarm

YS1000 Series
Functional Enhancement

■ GENERAL

The YS1310 Indicator with Alarms is an input indicator that has alarms with two inputs. Two loops can be displayed simultaneously. A high limit alarm, low limit alarm, high-high limit alarm, and low-low limit alarm can be generated for each of the two inputs, and the AND connection or OR connection of arbitrary alarms can be output from a total of 6 contacts.

The YS1310 offers high reliability thanks to Yokogawa's proprietary technology, user friendliness, and expandability. The basic type conforming to the DIN short case size contributes to space saving for mounting, and complies with standards (CE, FM and CSA). For easy replacement of earlier models requiring the same panel cutout dimensions and depth as those of earlier models are also offered.



■ FEATURES

- A full-dot, FTF LCD
  Clear visibility of the display screen is ensured even in direct sunlight in the early morning and late afternoon. The user can freely access a desired operation screen from meter, trend, bar graph, alarm, and event displays. All parameters can be set via the front panel display.
- The parameters can all be set by operation on the front panel (no need to draw out the internal unit).
- Parameters can also be set using YSS1000 Setting Software available separately.
- Can be driven by either an AC (100 V) or DC (24 V) power supply. (Must be specified upon ordering if using a 220–240 V DC power supply.)
- Dust- and splash-proof IP54 faceplate (for basic type only)
- Depth 250 mm (only for the basic type)
- No battery or capacitor is used for memory backup. No maintenance is required because batteries and backup capacitors are not used.
- CE mark (for basic types and YS100-compatible type only)
- FM Nonincendive explosion protection (optional for basic type only)
- CSA Nonincendive explosion protection (optional for basic type).
- Communication (option)
  Ethernet (Modbus/TCP) (for basic types only)
  RS485 (PC Link, Modbus, YS protocol, unavailable for YS80 internal unit-compatible type)
- Compatibility with the YS100 series
  Setting and control operations can be done with the same feel. In the case of the basic type, terminal-to-terminal pitches differ but the signal-to-terminal arrangement is almost the same. The following functions are included to ensure compatibility with the SIHK.
  - Meter Display was added to the Operation Display.
  - Housing for replacement purposes (SHUP-000 separately available)

Type	Model and Suffix Codes (☐ : Depending on specifications)	Analog Inputs (*1)		Digital Outputs Alarm (*3)
		1-5 V	Direct Input (*2)	
Basic type	YS1310-10x	2	-	6
Basic type with expandable I/O	YS1310-12x (/A ☐ (*1))	2 (1)	(1)	6
Compatible type for YS100	YS1310-13x	2	-	6
Compatible type for YS80 internal unit				
Compatible type for EBS and I series				
Compatible type for EK and HOMAC	YS1310-14x (/A ☐ (*1))	2 (1)	(1)	6
Compatible type for YS80(Compatible size for YS80 with YS100 terminal)	YS1310-15x (/A☐ (*1))	2 (1)	(1)	6

*1: The point counts shown in parenthesis are those when direct input is specified.
*2: One of the two analog inputs can be used as direct input (option/A ☐ : ☐ = 01 to 08)
*3: One of the six points can be set as DI by setting the parameter and used to turn off the backlight.

YOKOGAWA
Yokogawa Electric Corporation
2-9-32, Nakacho, Musashino-shi, Tokyo, 180-8750 Japan
GS 01B08D02-01EN
©Copyright Jun. 2014 (YK)
10th Edition June 16, 2025 (YK)

■ Display and Setting Functions

● Display functions

(1) Display specification

YS1700 displays are composed of the following three groups and the individual functions can be set up via displays for the respective settings:

Operation displays	LOOP displays TREND displays ALARM displays DUAL displays METER displays FAIL display (when a failure occurs)
Tuning displays	Setting display Input/output data display
Engineering	Function settings Input specification settings Password setting Operation display settings LCD settings Communication settings

(2) Operation Displays

▪ Bar graph displays (in LOOP and DUAL displays)

Scale divisions	Up to 20
Digits of scale markings	Up to 7 digits (including decimal point and sign)
Display position of scale markings	At 0% and 100% positions
Units	Up to 7 alphanumeric characters
PV bar graph resolution	0.5%
Alarm setting pointer resolution	0.5%
PV overflow display	Above 100%
PV underflow display	Below 0%

▪ Meter Display (METER Display)

Scale divisions	Automatic setting based on upper and lower scale limits (reading factor can be modified).
Scale graduation	
Scale markings	
Reading factor	
Digits of scale markings	Up to 4 digits (including decimal point and sign)
Display position of scale markings	At 0% and 100% positions
Units	Up to 7 alphanumeric characters
PV pointer resolution	0.5%
Alarm setting pointer resolution	0.5%

▪ Tag Number and Digital Value Displays

Display characters for tag numbers	Alphanumeric characters
Display digits of tag numbers	Up to 12
Display digits of PV digital indications	Up to 7 (including decimal point and sign)

▪ Trend display specifications

Trend display types

Trend 1	PV1 trends can be displayed and hidden. PV1 scaling can be displayed.
Trend 2	PV2 trends can be displayed and hidden. PV2 scaling can be displayed.
Trend 3	Four arbitrary values for PV1, PV2, X1, and X2 can be selected and displayed on a single display. PV scaling can be displayed.

Trend display time span

Trend display time span	1.5 minutes, 7.5 minutes, 15 minutes, 45 minutes, 1.5 hours, 7.5 hours, 15 hours, and 45 hours

▪ Event display specification

Function	When an event occurs, a popup window appears on Operation Display. Preset messages appear in the popup window.
Cancel and redisplay	The event display can be closed by pressing the SHIFT key for three seconds and the messages can be redisplayed in the ALARM display.
Number of settable events	Up to 5
Setting software (available separately)	The YSS1000 (Setting software for the YS1000) is used. Display details and event flags are set with the YSS1000's event display function.

Display during Failure

The display is automatically switched to the FAIL display upon a failure.

Refer to the functional specification.

All Rights Reserved. Copyright © 2014, Yokogawa Electric Corporation

● Display section names

(1) Front panel section names

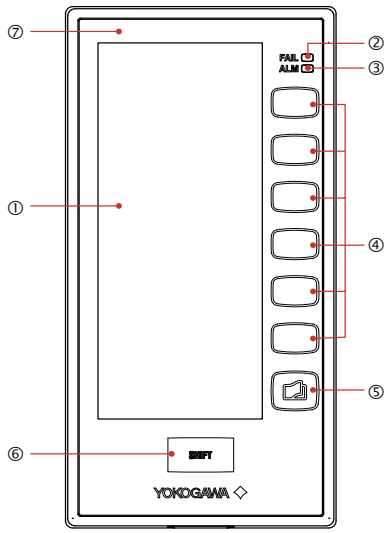

Item	YS1350
1	LCD display unit (color LCD): 120 x 320 dots *1
2	FAIL lamp (LED: red)
3	ALM lamp (LED: yellow)
4	Software key
5	Page key
6	SHIFT key
7	Tag label (recommended placement position)

*1: The contrast and backlight brightness can be adjusted, and the backlight can be turned off.

(2) Swing-up internal panel section names

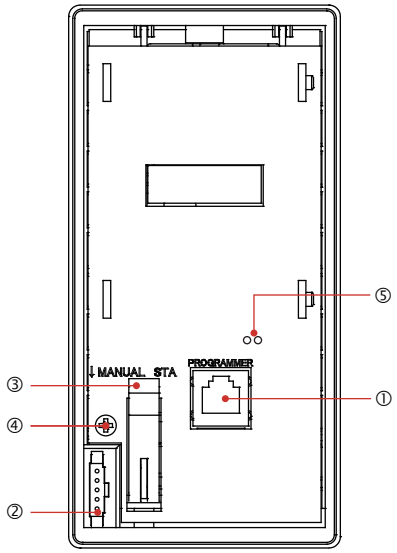

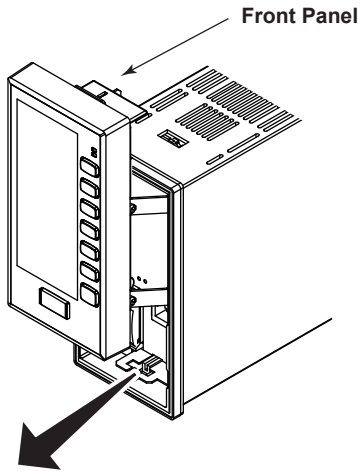

Item	Name	Remark
1	Connector for PC connection (PROGRAMMER)	A communication cable connector to download and upload parameters set with YSS1000 Setting Software
2	Connector for the YS110 Standby Manual Station	Unused for the YS1310. Do not connect anything.
3	Internal unit's release bar	Do not draw out the internal unit. If you need to draw out the internal unit, ask our sales representative or service office.
4	Internal unit's fixing screws	
5	LED and switch for repair	Contact us for repair.

All Rights Reserved. Copyright © 2014, Yokogawa Electric Corporation

■ Functional Specification

● Alarm function

Name	Setting Range	Remark
High limit alarm setpoint for PV	-6.3 to 106.3%	Settings are values in engineering units.
Low limit alarm setpoint for PV	-6.3 to 106.3%	
High-high limit alarm setpoint for PV	-6.3 to 106.3%	
Low-low limit alarm setpoint for PV	-6.3 to 106.3%	
Alarm hysteresis	0.1 to 20.0%	

- Alarm output: 6 points (one of the 6 points can be set as DI by setting the parameter and used to turn off the backlight.)
  The AND connection or OR connection of arbitrary alarms is set and output.
- Contact status during alarm: Close or open as selected by the user.
- Contact status during power failure: Open.

Name	Service	Indication When Alarm Setpoint is Set or When Alarm Has Occurred	Remark
Alarm setting pointer display	High limit alarm setpoint for PV	Yellow pointer	LOOP Display DUAL Display METER Display
	Low limit alarm setpoint for PV	Yellow pointer	
	High-high limit alarm setpoint for PV	Orange pointer	
	Low-low limit alarm setpoint for PV	Orange pointer	
Alarm Indications	ALM lamp	Lights up in yellow	—
	Alarm occurrence indication	Alarm indication on LOOP display	—
	Alarm name display	Display on ALARM	—
	Tag number inversion display	Inversion and alternating display of tag numbers in all displays	Enabled and disabled by a parameter.
	Active display	Change of PV bar and its background colors	Alarm type to cause the active display is to be set by a parameter.

● Input signal computation function

	Name	Setting Range
First-order delay equation	Constant in the event of a first-order delay for PV	0.0 to 800.0 s
Square root computation	PV square root computation	OFF: square root computation disabled ON: square root computation enabled
	PV square root computation □ – cut off point setting value	0.0 to 100.0%

● Output signal computation function

	Name	Setting Range
Output limiter function for MV	High limit output limiter	-6.3 to 106.3%
	Low limit output limiter	-6.3 to 106.3%

● Input and output computation period

100 ms

● Power failure and power return operation

Operation starts under the conditions of start mode set with the parameters.

Parameters are stored in the nonvolatile memory.

- Return mode
- Select from the following return modes.

Start Mode	Duration of Failure	
	Less than approx. 2 s	Approx. 2 s or longer
AUT mode	Hot start	Hot start
COLD mode	Hot start	Cold start

- Response to Power Recovery

	Start Mode (START)	
	HOT start	COLD start
Parameter	Remains the same as before power failure.	
First order delay equation	Continuously performed.	Initialized

● Self-diagnosis function

(1) FAIL

Diagnosis Content
Clock stop
Main CPU abnormal
Display CPU abnormal
A/D conversion unit abnormal
RAM abnormal
System ROM abnormal
Nonvolatile memory abnormal

When a failure occurs:
FAIL lamp lights up.
FAIL contact output open
(Close when a power failure occurs)

(2) Alarm

Diagnosis Content
System alarm
Process alarm

When an alarm is generated:
ALM lamp lights up.
The alarm cause is displayed on the screen.
Active display (only when the function is set to ON)
= When a process alarm is generated, the color of the PV bar on LOOP Display changes.
Tag highlight display (only when the function is set to ON)
= When an alarm lamp lights up, the color of the tag is changed and highlighted alternately.

● Screen display when a failure occurs

When a failure occurs, the screen changes to FAIL Display. (*1)

When the main CPU fails, FAIL Display is displayed using the display CPU.

When the display CPU fails, FAIL Display is displayed using the main CPU.

*1: However, this does not happen, when the clock stops or both the main CPU and display CPU fail.

● Security

Password-based parameter protection function

All Rights Reserved. Copyright © 2014, Yokogawa Electric Corporation

■ Hardware Specification

● Input and output signal specification

Analog input signal

Item	Specification
1 to 5 VDC (basic type)	2 points
Input resistance	1 MΩ
Direct input (*1)	One of the above 2 points possible

*1: Any one of mV, thermocouple, resistance temperature detector, potentiometer, two-wire transmitter, input isolator, or frequency input.
optional code /A□ (□= 01 to 08)
For the details of direct input, refer to "Direct Input Specification."

▪ Digital input

Item	Specification
Digital input (basic type)	1 point (only possible when DO6 is unused)

Input signal	ON	OFF
In case of no-voltage contact (*2) (*3)	Close Resistance 200 Ω or less	Open Resistance 100 Ω or more
In case of voltage contract	Low Input voltage –0.5 to 1 VDC	High Input voltage +4.5 to 30 VDC

*2: Input contact rating: 5VDC, 20 mA or more
*3: The same terminals can be connected to both no-voltage and voltage contacts

▪ Digital output

Item	Specification
Digital output (basic type)	6 points (5 points when the digital input is used)
Transistor contacts	Rating: 30 V DC, 200 mA (resistance load)
FAIL output (*4)	1 point
Transistor contacts	Rating: 30 V DC, 200 mA (resistance load)

*4: FAIL contact output is in the off state when the power is OFF and a failure occurs. (In normal time: on state)
Operation is a NC operation.

● Transmitter power supply

Item	Specification
Output voltage	25 to 25.5 VDC
Load	60 mA or less (30 mA or less when the direct input is not used)
Short-circuit protection	80 mA ±10 mA
Other	The computation circuit is not affected by a short circuit. Not isolated from the computation circuit. 1 to 5 V conversion resistance (250 Ω) shall be supplied externally.

● Isolation of signals from each other

Item	Specification
Analog input and output signal	Not isolated from the computation circuit. Signals are not isolated from each other. The negative wire is shared. Isolated from other input and output signals.
Direct input	Except for a 2-wire transmitter (not isolated), the input signal and computation circuit are isolated. Isolated from the power supply circuit, and other input and output signals.
Digital input and output signal	Isolated from the computation circuit. Signals are also isolated from each other. Isolated from other input and output signals.
FAIL signal	Isolated from the computation circuit. Isolated from other input and output signals.
Communication	
Power supply	
Grounding	

All Rights Reserved. Copyright © 2014, Yokogawa Electric Corporation

● Reference performance

● Reference operating conditions

Ambient temperature: 23°C ±2°C, relative humidity: 50% ±10%

However, the power supply voltage shall be as follows.

24 VDC ±10% or 100 VAC ±10%, 50/60 Hz

135 VDC ±10% or 220 VAC ±10%, 50/60 Hz

Item	Specification	
Input and output conversion accuracy rating		
1 to 5 V input signal	±0.1% of span	
Direct input	±0.5% or ±(2 x | direct input card accuracy | + 0.1%)	
Allowable input voltage (*1)		
1 to 5 V signal	±30 VDC	
Direct input signal (mV, TC)	-0.5 to 4 VDC	
Direct input signal (distributor)	+40 mA DC	
Warm-up time	1 minute (time required to meet the tolerance after the power is turned on), 3 minutes in the case of direct input.	
Input resistance	1MΩ (1 to 5 V input)	
Current consumption and power consumption	100 VAC and 24 VDC power supply 750 mA (20 to 132 VDC) 30 VA (80 to 138 VAC)	
	220 VAC power supply 110 mA (120 to 340 VDC) 30 VA (138 to 264 VAC)	
Insulation resistance	100 MΩ or more (at DC 500 V) between input and output terminal and ground terminal, and between power supply terminal and ground terminal	
Withstand voltage	Between input/output terminal and ground terminal	1000 VAC for one minute(for suffix codes -10x or -12x)
		500 VAC for one minute (for suffix codes -13x, -14x, -15x)
	Between power supply terminal (L, N) and (all I/O terminal and ground terminal)	3000 VAC for one minute (In the case of suffix codes -10x or -12x)
	Between power supply terminal (L,N) and ground terminal	1500 VAC for one minute
LCD display unit replacement cycle	8 years	

*1: Measurement category in accordance with IEC/EN 61010-1, IEC/EN 61010-2-201, IEC/EN 61010-2-030, and CAN/CSA-C22.2 No.61010-1, CAN/CSA-C22.2 No. 61010-2-030: O (other)

Regarding the LCD

A small number of missing or steady-on LCD pixels and minor variations in brightness uniformity is a normal display characteristic and not a malfunction.

● Influence of operating conditions

Item	Specification
Influence of changes in power supply	|Accuracy| (in the range of power supply rating)
Influence of input lead resistance	0.13% (per 1 kΩ)
Influence of load resistance	|Accuracy|/5 2 kΩ to ∞, 1 to 5 V output 0 to 750 Ω, 4 to 20 mA
Common mode noise rejection ratio	83 dB (1 to 5 V input) 50/60 Hz
Series mode noise rejection ratio	46 dB (1 to 5 V input) 50/60 Hz
Influence of magnetic field	|Accuracy|/5 (400 A/m, 50/60 Hz or DC)
Influence of ambient temperature	|Accuracy| (about 10°C in the range of 0 to 50°C)
Influence of ambient humidity	|Accuracy| (50 to 93% RH, 40°C)

All Rights Reserved. Copyright © 2014, Yokogawa Electric Corporation

■ Communication Signal Specification

Item	Programmer Communication (Used for YSS1000)	RS-485 Communication	Ethernet Communication
Electrical specification	Complies with RS-232C	Complies with EIA RS-485	Complies with IEEE802.3 10BASE-T/100BASE-TX
Transmission control means	Asynchronous, no procedure, half-duplex	Asynchronous, no procedure, half-duplex	CSMA/CD
Baud rate	-	1200, 2400, 4800, 9600, 19200, 38400 bps	10 Mbps, 100 Mbps
Protocol	Dedicated protocol	PC link PC link with SUM Modbus ASCII Modbus RTU (Slave) YS protocol	Modbus/TCP (Server)
Connection	Dedicated front panel connector	Back panel screw terminal (5 terminals and 1 ground terminal)	Back panel RJ45 connector
Number of connection modules	1 module	Up to 31 modules/port	Up to 4-tier cascade stack (10BASE-T) Up to 2-tier cascade stack (100BASE-TX) (2*) Number of connections: 2 Maximum number of transactions: 1 (*4)
Applicable cable	Dedicated cable A1053UR (USB-R5232C conversion cable)	Shielded twisted pair wire Wire size: 0.5 to 1.25 mm^2 (AWG No. 20 to 16)	10BASE-T/100BASE-TX cable
Cable length	About 2.7 m	Up to 1200 m (1.25 mm^2)	100 m (*3)

*2: Number of cascade connected hubs
*3: Maximum segment length
(length between hub and YS1310)
*4: Per a connection

● Communication functions

Communication with the host systems

Communication with host systems such as Yokogawa's PLC (FA-M3) and other companies' PLCs is possible.

Destination	Link device in host system	YS1310 communication functions	
		Option	Protocol
FA-M3	UT link module	RS-485 communication (/A31)	PC link
PLC or PC from other vendors	Device with RS-485 communication functions		Modbus RTU/ASCII (Slave)
	Device with Ethernet communication functions	Ethernet communication (/A34)	Modbus/TCP (Server)

● Communication items

Measured values can be read out and configuration parameters can be read out and written. Data setting can be enabled and disabled through the use of communication.

All Rights Reserved. Copyright © 2014, Yokogawa Electric Corporation

■ Direct Input Specification

Item	mV input	Thermocouple Input
Optional code	/A01	/A02
Input signal	DC potential difference -50 to +150 mV	JIS and ANSI standards, thermocouple types K, T, J, E, B, R, S IEC and ANSI standards, type N
Measurement range (span)	10 to 100 mVDC	10 to 63mV (thermoelectric power equivalent)
Measurement range zero elevation	Within the smaller value out of either 3 times the span or ±50 mV	Within the smaller value out of either 3 times the span or ± 25 mV
Measurement range	Can be changed on Engineering Display.	
Input resistance	1 MΩ (3 kΩ in the event of a power failure)	
External input resistance	500 Ω or less	
Allowable input voltage and current	-0.5 to 4 VDC	
Input linear rise	No	Yes
1 to 5 V output conversion accuracy rating	Within ±0.2% of span	The larger value out of either ±0.2% of span or input equivalent ±20 μV
Reference junction compensation error	-	Within ±1°C (*1)

*1: Reference junction temperature compensation is not performed for type B.
With the exception of type B, when the measured temperature is less than 0°C, the above value is to be multiplied by the following factor (K).
K = (thermoelectric power per 1°C around 0°C)/(thermoelectric power per 1°C for the measured temperature)

Item	Resistance Temperature Detector Input	Potentiometer
Optional code	/A03	/A04
Input signal	Pt 100 (IPTS-68: JIS'89), JPt100 (JIS'89) Pt100 (ITS-90: JIS'97), Pt50(JIS'81) 3-wire Measurement current: 1mA	Potentiometer, 3-wire
Measurement range (span)	10 to 650°C (Pt100) 10 to 500°C (JPt100)	Total resistance: 100 to 2000 Ω Span: 80 to 2000 Ω
Measurement range zero elevation	Within 5 times the span	Within 50% of total resistance
Measurement range	Can be changed on Engineering Display.	
External input resistance	10 Ω or less per wire (*2)	10 Ω or less per wire
Input linear rise	Yes	No
1 – 5 V output conversion accuracy rating	The larger value out of either ±0.2% of span or ±0.2°C	Within ±0.2% of span

*2: The value shall be equal or less than the smaller value out of 10 Ω per wire or
(measurement temperature span) × 0.4 Ω.

Item	Input Isolator	2-wire Transmitter Input and 2-wire Transmitter Input (Input Not Isolated)
Optional code	/A05	/A06, /A07
Input signal	1 to 5 VDC	4 to 20 mADC signal from the 2-wire transmitter (power is supplied to the transmitter)
Input resistance	1 MΩ (100 kΩ in the event of a power failure)	250 Ω
External input resistance	-	RL = within (20 minimum transmitter operating voltage)/(0.02 A (Ω))
Allowable input voltage and current	±30 VDC	40 mADC
Input linear rise	No	Yes
1 to 5 V output conversion accuracy rating	Within 0.2% of span	

Item	Frequency Input
Optional code	/A08
Input signal	2-wire: contact, voltage pulse, current pulse (power can also be supplied to the transmitter) 3-wire: power supply voltage pulse
Input frequency	0 to 10 kHz (0 to 10 Hz when the input filter is set to ON.)
100% frequency	0.1 to 10 kHz (0.1 to 10 Hz when the input filter is set to ON.)
Zero elevation	0 to 50% can be set for 100% input frequency.
Measurement range	Can be changed on Engineering Display
Low level input cut off point	Setting range: 0.01 Hz (and 1% of maximum frequency) to 100% input frequency.
Minimum input pulse width	ON: 60 μs OFF: 60 μs (input frequency 0 to 6 kHz) ON: 30 μs OFF: 30 μs (input frequency 6 to 10 kHz)
Input signal level	Contact input: relay contact, transistor contact Open and close detection level, open: 100 Ω or more, close: 200 Ω or less Contact capacity: 15 VDC, 15 mA or more Voltage and current pulse input: low level: -1 to +8 V, high level: +3 to +24 V Pulse wave high value: 3 V or more (input frequency 0 to 6 kHz), 5 V or more (input frequency 6 to 10 kHz)
Internal load resistance (for current pulse)	Selectable from 200 Ω, 500 Ω, and 1 kΩ. This item is to be specified at the time of ordering.
Input filter	Selectable whether to add a 10 ms filter (for no-voltage contact). This item is to be specified at the time of ordering.
Power supply for transmitter	Selectable from 12 VDC/30 mA or 24 VDC/30 mA. This item to be specified at the time of ordering.
1 to 5 V output conversion accuracy rating	Within 0.2% of span

Note: There is no difference between the latest and the previous temperature tables as far as applying them to the YS1000.
- TC: Latest version; IEC60584-1: 2013/JIS C1602:2015
Previous version; IEC60584-1: 1995/JIS C1602:1995
- RTD Latest version; IEC60751- 2008/JIS C1604:2013
Previous version; IEC751- 1995/JIS C1604:1997

All Rights Reserved. Copyright © 2014, Yokogawa Electric Corporation

■ Operating Conditions, Transport, and Storage Conditions

- **Normal operating conditions, transport and storage conditions**

Item	Normal Operation	Transport and Storage
Ambient temperature	0 to 50°C	-20 to 60°C
Ambient humidity	5 to 90% RH (no condensation)	5 to 95% RH (no condensation)
Power supply voltage (AC) (*1)	80 to 138 VAC (100 VAC and 24 VDC power supply) 138 to 264 VAC (220 VAC power supply)	-
Power supply frequency (AC)	±3 Hz	-
Power supply voltage (DC) (*1)	20 to 132 VDC (100 VAC and 24 VDC power supply) 120 to 340 VDC (220 VAC power supply)	-
Continuous vibration	5 to 14 Hz, amplitude: 0.625 mm or less, 14 to 150 Hz, 4.9 m/s^2 or less, orthogonal three-directional, with 2 channels each	
Short-time vibration	14.7 m/s^2, 15 s or less	
Shock	49 m/s^2 (SG) or less 11 ms or less	
Package drop	Within 1 m	
Magnetic field	400 A/m or less	
Hazardous gas	There shall be no corrosive gas in the location.	
Mounting altitude	2000 m or less	
Atmospheric pressure	86 k to 106 Pa	

*1: The safety standard and FM/CSA non-incentive standard standards compliance conditions apply to the following power supply ratings.

For AC (100 V) and DC (24 V DC) dual power drive models:

- 24 to 120 V DC (±10%), no polarity, 750 mA MAX
- 100 to 120 V AC (±10%), 50/60 Hz (±3 Hz), 30 VA MAX

For 220 V AC power drive models:

- 135 to 190 V DC (±10%), no polarity, 110 mA MAX
- 220 to 240 V AC (±10%), 50/60 Hz (±3 Hz), 30 VA MAX

All Rights Reserved. Copyright © 2014, Yokogawa Electric Corporation

■ Safety Standard

Item	Content	Remark
General safety compliance standard	Compliant with IEC/EN 61010-1, IEC/EN 61010-2-201, IEC/EN 61010-2-030 Overvoltage category: II Pollution Degree: 2 Measurement category: O (other) Rated voltage to earth of measuring circuit terminal: 33 V ACrms (50/60 Hz) or 70 V DC Compliant with CAN/CSA-C22.2 No. 61010-1, CAN/CSA-C22.2 No. 61010-2-030, and CAN/CSA-C22.2 No. 61010-2-201 Overvoltage category: II Pollution Degree: 2 Measurement category: O (other)	Only for the models with suffix code -10x or -12x. For suffix code: -10x and /CSA option, compliant with CSA.
EMC compliance standard	EN 61326 Class A EN 55011 Class A Group 1 EN 61000-3-2 EN 61000-3-3 Note: The instrument continues to operate within ±20% of the measurement viscosity range during testing. EMC Regulatory Arrangement in Australia and New Zealand (RCM): EN 55011 Class A Group 1 comliant KC: Electromagnetic wave interference prevention standard, electromagnetic wave protection standard compliance	Only for the models with suffix code -10x or -12x. For suffix code: -10x, -12x-, 13x, or -14x, compliant with KC marking.
Hazardous area classification	FM nonincendive: FM 3600:2011 FM 3611:2004 FM 3810:2005 Locations: Class I, Division 2, Groups A,B,C and D Temperature Code: T4 CSA nonincendive: CSA C22.2 No. 213-17 Locations: Class I, Division 2, Groups A,B,C and D Temperature Code: T4	For suffix code: -10x and /FM or /CSA option, Nonincendive electric device usable in hazardous area.

Please select appropriate equipment in accordance with the laws and regulations of the relevant country/region, when it is used in a location where explosive atmospheres may be present.

● **Notes regarding the safety standard**

1)The standalone internal unit does not comply with the safety standard.
Combination of the internal unit either with the safety standard compliance case or the safety standard compliance housing complies with the safety standard.

2)For work involving taking out the internal unit or storing it in the case as described below, it is required to check safety in accordance with the safety standard (IEC/EN 61010-1).
This work must be carried out by Yokogawa technicians or those authorized by Yokogawa, and testing (withstanding voltage test and the like) to check safety is required.

If customers carry out the work at their own responsibility, the internal unit will no longer comply with the safety standard.

[1] Work to take the internal unit out of the case, and work to put it back into the case or housing after it is replaced.
[2] Work to replace and mount the power supply unit, display unit, or optional board.
[3] Work to make changes to the setting switches on the main board and optional board.
[4] Other maintenance and repair work involving taking out the internal unit.

■ ENVIRONMENT STANDARD

EU RoHS directive: EN IEC 63000
(The /A08 option is excluded.)

All Rights Reserved. Copyright © 2014, Yokogawa Electric Corporation

■ Functional Block Diagram

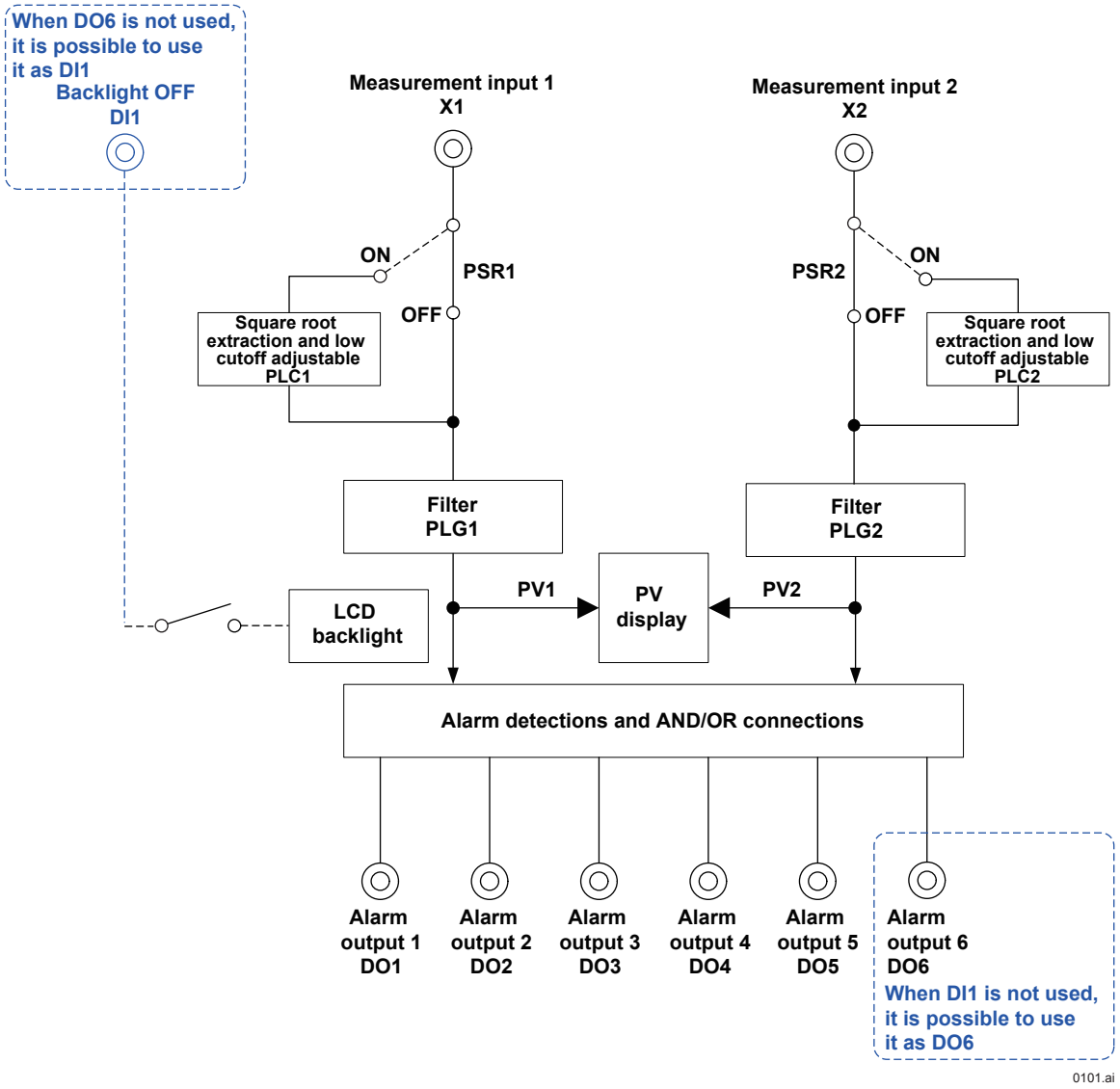

All Rights Reserved. Copyright © 2014, Yokogawa Electric Corporation

■ Terminal Layout (Basic type)

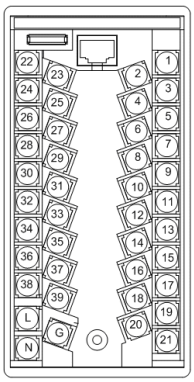

Terminal No.	YS1310
1	+ Measurement input 1 (1-5V DC)
2	– Measurement input 1 (1-5V DC)
3	+ Measurement input 2 (1-5V DC)
4	– Measurement input 2 (1-5V DC)
5	(*1)
6	(*1)
7	(*1)
8	(*1)
9	+ Direct input signal output (*2)
10	– Direct input signal output (*2)
11	+ Fail output
12	– Fail output
13	Transmitter Power supply (24V DC) (*3)
14	Communication SG
15	Communication SDA (–)
16	Communication SDB (+)
17	Communication RDA (–)
18	Communication RDB (+)
19	+ Direct input (*4)
20	– Direct input (*4)
21	Direct input (*4)
22	(*1)
23	(*1)
24	(*1)
25	(*1)
26	(*1)
27	(*1)
28	+ Alarm output 1
29	– Alarm output 1
30	+ Alarm output 2
31	– Alarm output 2
32	+ Alarm output 3
33	– Alarm output 3
34	+ Alarm output 4
35	– Alarm output 4
36	+ Alarm output 5
37	– Alarm output 5
38	+ Alarm output 6 or Digital input 1
39	– Alarm output 6 or Digital input 1
L	+ Power supply
N	– Power supply
G	Ground (GND)

Direct Input Terminals

		Terminal number		
		19	21	20
2mV input (optional code / A01) 3Isolator (optional code /A05)		+		-
Thermocouple input (optional code /A02)		+ RJC –		
RTD input (optional code / A03)		A B B Match the wiring resistances of terminals 19 and 21 with each other.		
Potentiometer input (optional code /A04)		100% 0% Match the wiring resistances of terminals 19 and 20 with each other.		
Frequency input (optional code /A08)	Two-wire type (voltage, contact)	+		-
	Power feed type, two-wired	Signal	Power Supply	
	Power feed type, three-wired	+	Power Supply	-
Two-wire transmitter input (optional code /A06, / A07)	Supply voltage required	+ –		
	Case of 4 to 20 mA signal not requiring supply power	– +		

Connection of Transmitter Power Supply

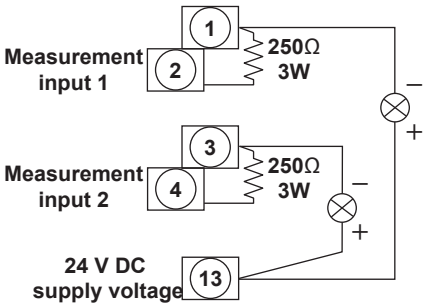

*1: Do not connect.
*2: If direct input (optional specifications) is provided, it becomes direct input signal output.
*3: For connecting two wire transmitters: see “Connection of Transmitter Power Supply”.
*4: For direct input connection: see “Direct Input Wiring” described later.

All Rights Reserved. Copyright © 2014, Yokogawa Electric Corporation

■ DIMENSIONS

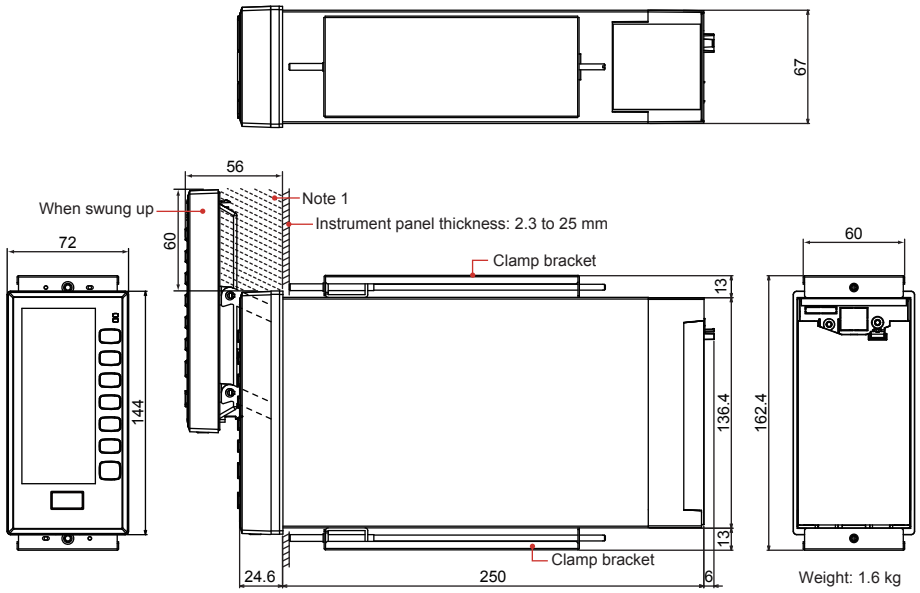

Pane Cutout Dimensions

For single mounting:

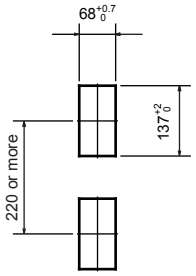

For side-by-side mounting:

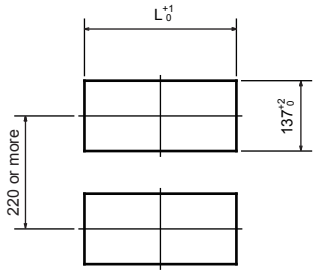

Panel Cutout Width for Side-by-side Mounting

Number of instruments to be mounted	L(mm)
2	140
3	212
4	284
5	356
6	428
7	500
8	572
9	644
10	716
11	788
12	860
13	932
14	1004

Trigonometry
Unit: mm
General tolerance = ±(value of tolerance class IT18 based on JIS B 0401-1998) / 2

0908E.ai

*1: When attaching a nameplate or the like to the panel within 60 mm above this instrument, ensure that its thickness is less than 30 mm.
*2: To ensure adequate ventilation, allow space of at least 100 mm above and below the panel.
*3: For the compatible type for YS100, compatible type for YS80 internal unit, compatible type for EBS, I, EK and HOMAC, compatible type for YS80, and compatible type for pneumatic 100 Line, see the dimensional drawings in attachments.

■ Structure, Mounting (Basic type)

Item		Specification
Case protection class		Dust- and splash-proof (IP54-compliant) faceplat Note: Not applicable in side-by-side multi-unit installation or compatible types.
Mounting		Indoor panel mounting
Panel mounting device		Mounting brackets to be used (at the top and bottom).
Panel cutout		137^{+2} × $68^{+0.7}$ mm
Wiring terminals	Signal wirings	M4 screw terminals
	Power supply and ground terminals	M4 screw terminals
Dimensions		144 × 72 × 250 mm (H x W x D from panel plate)
Weight		1.6 kg

All Rights Reserved. Copyright © 2014, Yokogawa Electric Corporation

■ Model and Suffix Code

Model	Suffix Code	Optional Code	Remark
YS1310			Indicator with alarm
Use	-1		Always -1
Type	0		Basic type
	2		YS100 compatible type (with YS100 case)
	3		YS80 internal unit compatible type, EBS, I, EK, HOMAC compatible type (*1)
	4		YS80 compatible type (YS 80 compatible size, YS100 terminal type)
	5		100 line compatible type (YS100 terminal type) (*2)
Power supply	0		100 VAC and 24 VDC power supply
	1		220 VAC power supply
Direct input (*3)		/A01	mV input
		/A02	Thermocouple input
		/A03	Resistance temperature detector input
		/A04	Potentiometer input
		/A05	Isolator
		/A06	2-wire transmitter input (insulation type)
		/A07	2-wire transmitter input (non-insulation type)
		/A08	Frequency input (*8)
		/DF	Direct input with Fahrenheit temperature range function (*7)
Communication		/A31	RS-485 communication (PC link, Modbus, YS protocol) (*4)
		/A34	Ethernet communication (Modbus/TCP) (*5)
Certification		/FM	FM nonincendive approved (FM Class I, Division 2) (*6)
		/CSA	CSA safety and nonincendive approved (Class I, Division 2) (*6)

*1: Can be connected with the YS80 housing (Model: SHUP-000). (The EK and HOMAC compatible housing SHUP-420 and EBS/I series compatible housing SHUP-100 are available separately.)
*2: The 100 line compatible housing (Model: YS006) is available separately.
*3: The direct input option can be added only for suffix codes –12x, -14x, and -15x. Multiple selections are not possible.
*4: Can not be added for suffix code –13x.
*5: /A34 can be specified only for suffix code –10x.
*6: Can be added only for suffix code –10x.
*7: This option can be combined only with option code /A02 or /A03.If option code /DF is specified, Fahrenheit temperature range can be available for direct input range in addition to Centigrade temperature range. In case of specifying Fahrenheit temperature range for direct input, option code /DF is required. When the direct input temperature range may be changed to Fahrenheit temperature range after shipment, also specify option code /DF.
*8: When option code /A08 is specified, the conformity to CE marking is excluded.

■ Items to Be Specified at the Time of Ordering

Model, suffix code, and optional codes, when necessary, are required to be specified.
Each customer can specify one tag number for the 12 alphanumerical symbols to be used on the main rating plate.
Direct input spec can be specified (only for the optional codes listed in the table below).

Optional Code	Item to Be Specified
/A01	Measurement range, Burnout
/A02	Thermocouple's compliance standard and type, Measurement range, Burnout
/A03	Resistance temperature detector's compliance standard, type, and resistance value at 0°C. Measurement range, Burnout
/A04	Total resistance, 0% resistance, 100% resistance, Burnout
/A08	Measurement range, Transmitter power supply (12 VDC/24 VDC), Input filter (ON/OFF), Current pulse load resistance (200 Ω, 500 Ω, 1 kΩ)

■ Accessories

Product Name	Part Number	Quantity	Remark
Clamp bracket	L4041RA	2	For YS1310-10x
	E9760RJ	2	For YS1310-12x
	E9760RN	2	
	E9760RJ	1	For YS1310-14x
	E9760RP	1	
Tag plate seal	-	4	50x3.5mm
Range entry seal		4	34x2mm
RJC sensor	L3501RA	1	Can be used only with optional code /A02.
Ferrite core	A1179MN	1	For direct input cable (Supplied with products with optional code /A0x.)
M4 screw with spring washer	Y9408JH	42	For YS1310-10x
YS1310 Operation Guide	-	1	A4 size

* Product user's manuals can be downloaded or viewed at the following URL. To view the User's Manuals, use Adobe Acrobat Reader of Adobe Systems Incorporated.
https://www.yokogawa.com/ns/ys/im/

All Rights Reserved. Copyright © 2014, Yokogawa Electric Corporation

■ Accessories (sold separately)

Product name	Model	Remarks
SHUP standard housing	SHUP-000	Available for YS1xx0-13x (Replace for YS80 Series)
SHUP long housing	SHUP-100	Available for YS1xx0-13x (Replace for I Series or EBS Series)
SHUP EK/HOMAC housing	SHUP-420	Available for YS1xx0-13x (Replace for EK or HOMAC Series)
100 Line pneumatic instrument replace housing	YS006	Available for YS1xx0-15x (Replace for 100 Line pneumatic instrument)
120 Ω terminating resistor(*9)	YS020	For RS-485 communication
250 Ω shunt resistor	YS021	For a built-in 24 V transmitter power supply

*9: The YS1310 has a built-in terminating resistor, which can be selected for use by setting the relevant parameter. If a terminating resistor is used in another device at the termination of the same communication system, an external terminating resistor needs to be provided to match the terminating resistance of the YS1310's built-in terminating resistor.

■ Selection of Explosion Protected Equipment

Please select appropriate equipment in accordance with the laws and regulations of the relevant country/region, when it is used in a location where explosive atmospheres may be present.

■ Basic Conditions and Individual Contracts at the Time of Purchase

The warranty for this product is defined in the basic conditions and individual contracts at the time of purchase. The individual conditions are as follows.

- **Warranty period of firmware**
  The warranty conditions for the firmware installed in this products are same as that of the hardware.

All Rights Reserved. Copyright © 2014, Yokogawa Electric Corporation
Subject to change without notice.