General Specifications

pH and ORP Sensors

GS 12B07B02-E

■ GENERAL

Yokogawa's process pH (PH8EFP, PH8ERP) and ORP (OR8EFG, OR8ERG) meters are highly reliable and feature advanced functions which are useful for a wide variety of applications including water quality management in a broad range of production processes and medium-sized wastewater treatment plants, or for general pH and ORP control systems. Based on Yokogawa's track record and years of experience, a comprehensive range of products has been produced to provide solutions best suited to individual applications.

For reliable measurement of pH of high purity water in boilers and semiconductor process applications, the pH sensor PH8EHP and holder PH8HH are offered.

This GS mentions PH8EFP, PH8ERP, OR8EFG and OR8ERG. See GS 12B10B00-01EN about PH4/OR4 Sensor Series pH/ORP Sensor.

■ FEATURES



Reinforced PPS resin pH/ORP Sensors PH8EFP, PH8ERP, OR8EFG, OR8ERG

- With the body made of Reinforced PPS resin, a strong engineering plastic, which is comparable to Fluororesin (PTFE) in terms of corrosion resistance and heat resistance, it allows for a wide range of applications.
- A single type of sensor can support all applications regardless of whether a holder or cleaner is used.
- The integrated-sensor design simplifies calibration with standard solutions and maintenance.
- The pH glass electrode of a pH sensor, the platinum or gold electrode of a ORP sensor and junction can be individually replaced.

pH Sensor for High Purity Water: PH8EHP

- The dedicated holder provides solutions to problems that arise when measuring high-purity water.
- Combined with FLXA™202/FLXA™21, FLXA™402, compensates for the effect of fluid temperature.

EXA PH and FLXA are either registered trademarks or trademarks of Yokogawa Electric Corporation.
All other company and product names mentioned in this GS are registered trademarks or trademarks of their respective companies.

YOKOGAWA

Yokogawa Electric Corporation
2-9-32, Nakacho, Musashino-shi, Tokyo 180-8750, Japan

GS 12B07B02-E
©Copyright Jan. 2000
21st Edition Apr. 2026

■ SYSTEM CONFIGURATION

For the FLXA202, FLXA21 2-Wire Analyzer, see GS 12A01A03-01EN, GS 12A01A02-01E, for the FLXA402 4-Wire Converter, see GS 12A01F01-01EN. For FLXA402T, see GS 12F05B10-01EN, GS 12E01B30-01EN and GS 12E04B40-01EN.
For the FC800D, FLXA402T, Non-reagent type Free Available Chlorine Analyzer, see GS 12F05B10-01EN.
For the TB820D, FLXA402T, Right Angle Scattered Light Turbidity Analyzer, see GS 12E01B30-01EN.
For the TB830D, FLXA402T, Surface Scattering Light Turbidity Analyzer, see GS 12E04B40-01EN.
For the holders or cleaning devices, see GS 12J05C02-00E.
For the PG400 pulse generator for clean unit, see GS 19C01B05-01EN.

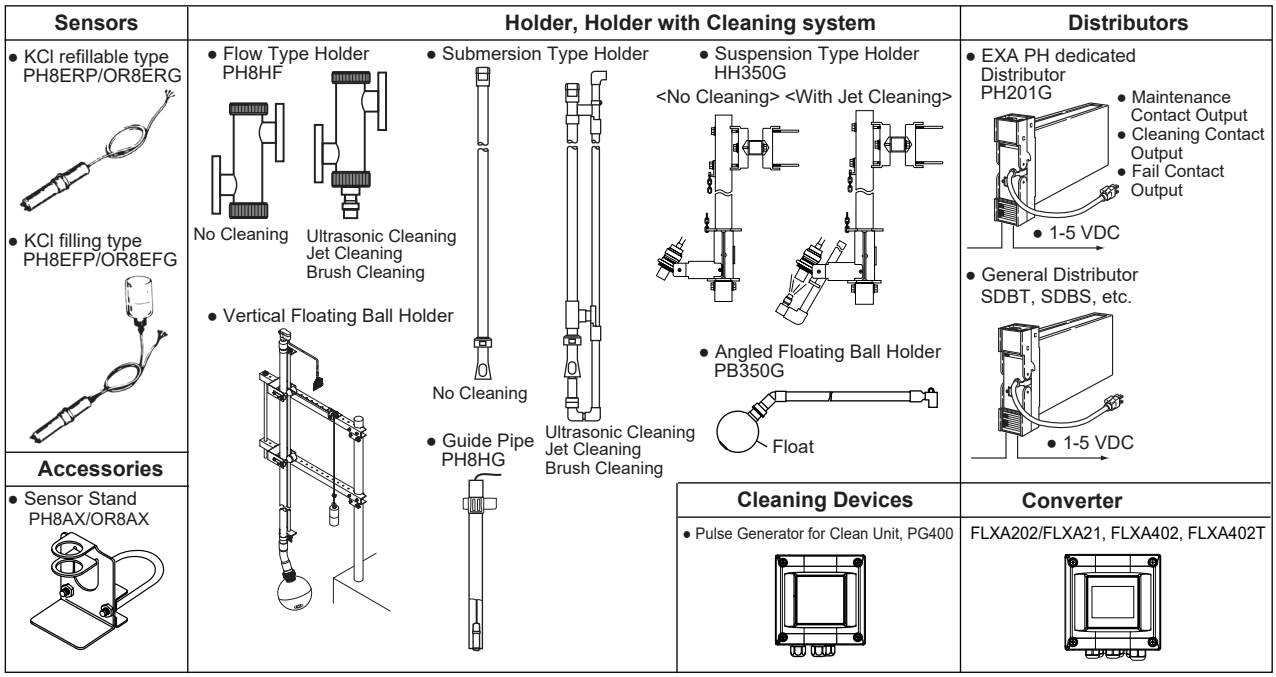

Fig.1-a System Configuration (General Purpose, Non-Explosionproof Types)

pH sensor	Holder	
● For pure water PH8EHP 	● For pure water PH8HH 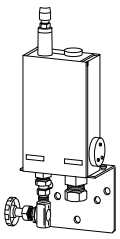	Accessories, pH Converter, Distributors are same type as those for General Purpose or Non-Explosionproof Types (See Fig. 1-a)

Fig.1-b System Configuration (For Pure Water)

All Rights Reserved. Copyright © 2000, Yokogawa Electric Corporation

■ SPECIFICATIONS

1. pH Sensor

1-1. Common Specifications

Measured object :Hydrogen ion concentration (pH) in aqueous solution
Measurement principle :Glass electrode method
Measuring range :Different by used sensor
Installation: Mounting in PH8HS submersion holder
Mounting in PH8HG guide-pipe holder
Mounting in PH8HF flow-through holder

Note: If any of the following solutions are measured, install the sensor either in a flow-through or submersion holder.
- When the solution temperature exceeds 80°C.
- When the pH of the solution is 2 or less or 12 or greater.
- When a strong acid solution is to be measured (e.g., aqua regia, chromic acid, hypochlorous acid or perchloric acid, etc.).
- When the solution contains corrosive gases (e.g., ammonia, chlorine, hydrogen sulfide, etc).
- When the solution contains a small percentage of organic solvent or oil.

Measurement conditions:
Process temperature ;See Table 1
Process pressure ;See Table 2
Conductivity ;50 µS/cm or higher

Note: Use PH8EHP(a sensor for high purity water) if the conductivity is lower than 50 µS/cm.

Table 1. Process Temperature Range

pH Sensor	Holder Type (*2) (*3)	Holder Material (*1)	Cleaner	pH Range	Temperature (°C)
PH8ERP	Guide-pipe (PH8HG)	PVC	None	2 to 12	-5 to 50
		PP	None		-5 to 80
	Submersion (PH8HS) Flow-through (PH8HF)	PP	None, Provided		-5 to 80
		SS	None, Provided		-5 to 80
	Suspension (HH350G)	SS	None, Provided		-5 to 80
	Float (PB350G, PB360G)	PP, SS	None		-5 to 50
PH8EFP	Guide-pipe (PH8HG)	PVC	None	2 to 12	-5 to 50
		PP	None		-5 to 80
	Submersion (PH8HS)	PP	None, Provided	0 to 14	-5 to 80
		SS	None		-5 to 105
			Provided		-5 to 80
	Flow-through (PH8HF)	PP	None, Provided		-5 to 80
		SS	None		-5 to 105
			Provided		-5 to 80
	Suspension (HH350G)	SS	None, Provided		-5 to 80
	Float (PB350G, PB360G)	PP, SS	None		-5 to 50
PH8EHP	High purity water(PH8HH)	Acryl	None	2 to 12	0 to 50

PV: Rigid Polyvinyl, PP: Polypropylene, SS: Stainless Steel

*1 Stainless steel holder should be used when the pH value of the solution is pH3 or more acidic.
*2 For flow-through types, refer also to the solution temperature and pressure diagram of Holder GS 12J05C02-00E.
*3 When sensors are used with Variopin connectors, the sensors can connect to Submersion-type or Flow-through type of holders.

Table 2. Process Pressure Range

Holder \ pH Sensor	PH8ERP	PH8EFP
Submersion	Atmospheric pressure (Submersion depth: 3 m max.)	
Guide-pipe Suspension Float	Atmospheric pressure (Submersion depth: 3 m max.)	
Flow-through (*1)	Atmospheric pressure to 50 kPa	Atmospheric pressure to 10 kPa (*2)
		Atmospheric pressure to 500 kPa (*3)

*1 For flow-through types, refer also to the solution temperature and pressure diagram of Holder GS 12J05C02-00E.
*2 When general purpose reserve tank used.
*3 When medium-pressure reserve tank used.

Table 3. Selection for pH Sensor

Application \ pH Sensor	PH8ERP PH8EFP	PH8EHP
General purpose	OK	NA
High purity water	NA	OK
Contaminating and sulfide-containing solutions	NA	NA
Caustic electrolysis solutions Solutions containing organic solvents	NA	NA
Waste water containing hydrofluoric acid	NA	NA

Note: The table above is just for reference.Consult sales personnel about selection.

1-2. KCl Refillable Type Sensor (PH8ERP)

Measuring range: pH2 to 12
Measuring temperature: -5 to 80°C
(See Table 1 when using holder)
Measuring pressure: Atmospheric pressure to 50 kPa
(See Table 2 when using holder)
Temperature compensation sensor: Pt1000
Wetted part materials:
Body; PPS resin, glass, titanium or Hastelloy C, ceramics or Fluororesin (PTFE), Fluoro rubber (FKM) or Perfluoroelastomer (FFKM)
Cable; Chlorinated polyethylene rubber (Cable sheath)
Weight: Approx. 0.4 kg (with 3 m cable*)
* Approx. 0.6 kg when supplied with a 3 m Variopin cable

When /CAL (with PH calibration setting data) is specified, keep the sensor in an environment protected from freezing and direct sunlight. (Room temperature storage) The calibration setting data attached to the product at the time of shipment is valid for 6 months after manufacture.

1-3. KCl Filling Type Sensor PH8EFP

Measuring range: pH0 to 14
Measuring temperature: -5 to 105°C
(-5 to 80°C when using Guide-pipe holder)
(See Table 1 when using holder)
Measuring pressure:
Atmospheric pressure to 10 kPa
(For general purpose or Big volume tank)
(See Table 2 when using holder)
Atmospheric pressure to 500 kPa
(For medium pressure)
(See Table 2 when using holder)
Temperature compensation sensor: Pt1000
Wetted part materials:
Body; PPS resin, Glass, Titanium or Hastelloy C, Ceramics or Fluororesin (PTFE), Fluoro rubber (FKM) rubber or Perfluoroelastomer (FFKM)

All Rights Reserved. Copyright © 2000, Yokogawa Electric Corporation

Cable; Chlorinated polyethylene rubber (Cable sheath)
KCl tube; Heat-resistant soft PVC (For general purpose* or Big volume tank*), Polyethylene (For medium pressure), Fluororesin (with /FEP)
*: Use a polyethylene tube when the KCl tube comes into contact with food containing oil or fatty organic matter.

Weight:
Sensor; Approx. 0.4 kg (with 3 m cable*)
* Approx. 0.6 kg when supplied with a 3 m Variopin cable
Tank; Approx. 0.3 kg (For general purpose)
Approx. 1 kg (For medium pressure)
Approx. 0.8 kg (Big volume tank)

When /CAL (with PH calibration setting data) is specified, keep the sensor in an environment protected from freezing and direct sunlight. (Room temperature storage) The calibration setting data attached to the product at the time of shipment is valid for 6 months after manufacture.

2. ORP Sensor

2-1. Common Specifications

Measured object:
Oxidation-Reduction potential in aqueous solution
Measurement principle: Metal electrode method
Measuring range: -1500 to 1500 mV
Measurement conditions:
Process temperature: See Table 4
Process pressure: See Table 5

Table 4. Process Temperature Range

ORP Sensor	Holder Type (*2)	Holder Material (*1)	Cleaner	Temperature (°C)
OR8ERG	Guide-pipe	PVC	None	-5 to 50
		PP	None	-5 to 80
	Submersion, Flow-through	PP	None, Provided	-5 to 80
		SS	None, Provided	-5 to 80
	Suspension	SS	None, Provided	-5 to 80
	Float	PP, SS	None	-5 to 50
OR8EFG	Guide-pipe	PVC	None	-5 to 50
		PP	None	-5 to 80
	Submersion	PP	None, Provided	-5 to 80
		SS	None	-5 to 105
			Provided	-5 to 80
	Flow-through	PP	None, Provided	-5 to 80
		SS	None	-5 to 105
			Provided	-5 to 80
	Suspension	SS	None, Provided	-5 to 80
	Float	PP, SS	None	-5 to 50

Note: PV: Rigid Polyvinyl, PP: Polypropylene, SS: Stainless Steel
*1 Stainless steel holder and should be used when the pH value of the solution is pH3 or more acidic.
*2 For flow-through types, refer also to the solution temperature and pressure diagram of holders GS 12J05C02-00E.

Table 5. Process Pressure Range

ORP Sensor / Holder	OR8ERG	OR8EFG
Submersion	Atmospheric pressure (Submersion depth: 3 m max.)	
Guide-pipe Suspension Float	Atmospheric pressure (Submersion depth: 3 m max.)	
Flow-through (*1)	Atmospheric pressure to 50 kPa	General purpose Atmospheric pressure to10 kPa
		Medium pressure Atmospheric pressure to 500 kPa

*1: For flow-through types, refer also to the solution temperature and pressure diagram of Holder GS 12J05C02-E.

Table 6. Selection of ORP sensor

Application \ ORP sensor		OR8ERG, OR8EFG	
		Platinum	Gold
General purpose		OK	NA
Drainage treatment	Cyanogen treatment	NA	OK
	Chrome treatment	NA	OK
Contaminated solutions		NA	NA
Solutions containing sulfide ion		NA	NA
Electrolytic process solutions		NA	NA

Note: The table above is just for reference.Consult sales personnel about the selection.

2-2. KCl Refillable Type Sensor OR8ERG

Measuring range: -1500 to 1500 mV
Measuring temperature: -5 to 80°C
(See Table 4 when using holder)
Measuring pressure: Atmospheric pressure to 50 kPa
(See Table 5 when using holder)
Wetted part materials:
Body; PPS resin, platinum-glass or gold-epoxy resin, titanium, ceramics, Fluoro rubber (FKM) or Perfluoroelastomer (FFKM)
Cable; Chlorinated polyethylene rubber (Cable sheath)
Weight: Approx. 0.4 kg (with 3 m cable)

2-3. KCl Filling Type Sensor OR8EFG

Measuring range: -1500 to 1500 mV
Measuring temperature: -5 to 105°C
(-5 to 80°C when using guide-pipe holder)
(See Table 4 when using holder)
Measuring pressure:
Atmospheric pressure to 10 kPa
(General purpose or big volume tank 500 mL)
(See Table 5 when using holder)
Atmospheric pressure to 500 kPa
(Medium pressure)
(See Table 5 when using holder)
Wetted part materials:
Body; PPS resin, platinum-glass or gold-epoxy resin, titanium or Hastelloy C, Ceramics or Fluororesin (PTFE), Fluoro rubber (FKM) or Perfluoroelastomer (FFKM)
Cable; Chlorinated polyethylene rubber (Cable sheath)
KCl tube; Heat-resistant soft PVC (General purpose), Polyethylene (Medium pressure), Fluororesin (with /FEP)
Weight:
Sensor; Approx. 0.4 kg (with 3 m cable)
Tank; Approx. 0.3 kg (General purpose)
Approx. 1 kg (Medium pressure)

All Rights Reserved. Copyright © 2000, Yokogawa Electric Corporation

3. pH Measuring System for High Purity Water

Use a holder for high purity water when using pH sensor for high purity water.

3-1. pH Sensor for High Purity Water PH8EHP

Measuring temperature: 0 to 50°C
Measuring pressure: Atmospheric pressure
Temperature compensation sensor: Pt1000
Measuring conductivity: See Fig. 2
Measuring flow rate: See Fig. 2
Wetted part materials:
Body; PPS resin, glass, titanium or Hastelloy C, Ceramics, Acrylic resin, Fluoro rubber (FKM)
Cable; Chlorinated polyethylene rubber (Cable sheath)
KCl tube; Heat-resistant soft PVC
Weight: Sensor ; Approx. 0.4 kg (with 3 m cable)
Tank ; Approx. 0.3 kg (General purpose)

3-2. Holder for High Purity Water PH8HH

Material:
Wet part; Acrylic resin (holder), Stainless steel (316 SS), chloroprene rubber, NBR (Nitrile-butadien rubber)
Holder; Stainless steel (304 SS)
Mounting bracket: Stainless steel (304 SS)
Process connections:
Inlet; Rc 1/4 or 1/4NPT (F)
Outlet; Rc 1/2 or 1/2NPT (F)
Mounting Method:
50A (2-inch) vertical or horizontal pipe mounting (specify mounting bracket) or wall mounting (mounting bracket supplied with holder)
Weight: Body; Approx. 1.7 kg
Mounting Bracket; Approx. 0.7 kg

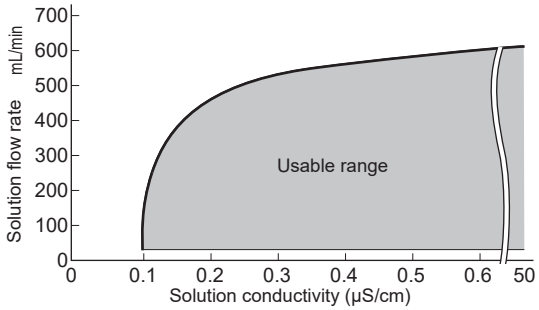

Fig.2 Solution flow rate and solution conductivity of sensor and holder for high purity water

4. Terminal Box

4-1. Terminal Box for General pH/ORP Sensors and PH4/OR4 Sensors (WTB10-PH1, -PH3, -PH5)

Used when analyzer or converter is installed remotely from general pH/ORP sensors and PH4/OR4 Sensors (PH4☐ in no combination with SA405, OR4☐, or PH4☐T).

Maximum cable length including sensor cable length should be within 20 m.

Ambient temperature: -10 to 50°C
Construction: JIS waterproof
Case material: Fiberglass reinforced polycarbonate resin
Case color: Grayish green (Munsell 2.5GY5.0/1.0)
Electrical connections:
pH sensor side;
ø21 mm hole (With G1/2 plastic gland)
pH Analyzer or Converter side;
ø13 mm hole (With G1/2 plastic gland)
With Cable (Maximum length 20 m)
Conduit adapter(optional)

4-2. Terminal Box for PH4☐ Sensors (WTB10-PH2, -PH4, -PH6)

Used when analyzer or converter is installed remotely from PH4☐ in combination with SA405.

Maximum cable length including sensor cable length should be within 20 m.

Ambient temperature: -10 to 50°C
Construction : JIS waterproof
Case material : Fiberglass reinforced polycarbonate resin
Case color : Grayish green (Munsell 2.5GY5.0/1.0)
Electrical connections:
pH sensor side:
ø21 mm hole (With G1/2 plastic gland)
pH Analyzer or Converter side:
ø13 mm hole (With G1/2 plastic gland)
With Cable (Maximum length 20 m)
Conduit adapter(optional)
Temperature sensor side:
Pg7 plastic gland

5. Accessories (Purchased Separately)

See Model and Suffix Codes.

All Rights Reserved. Copyright © 2000, Yokogawa Electric Corporation

■ Compliance with the simple apparatus requirements

PH8EFP, PH8ERP, PH8EHP, PH8ECP, OR8EFG, and OR8ERG meet the simple apparatus requirements defined in the following standards.

Note: TIIS certified types cannot be connected.

Use the sensors under the conditions of use required by the standards.

Applicable standards:

ANSI/ISA-60079-1
ANSI/ISA-60079-0
CAN/CSA-C22.2 NO. 60079-11
CAN/CSA-C22.2 NO. 60079-0
IEC 60079-11
IEC 60079-0
KS C IEC 60079-11
KS C IEC 60079-0
GB/T 3836.4

Conditions of use:

(1) Use in combination with an internally isolated analyzer, or use with, an analyzer in combination with isolated barrier.
The FLXA21/202 is internally isolated.

(2) Upper limit of the process temperature.
The upper limit of process temperature is indicated below when the sensor is used in combination with a YOKOGAWA analyzer.

For FLXA21/202, model and suffix code below is available.

FLXA21-D-□-D-◊-P1-○-A-N-LA-N-NN
□ can be any value.
◊ must be CB, CD, CH, or EG.
○ must be NN or P1.
Any option code is available

FLXA202-D-□-D-◊- P1-○-A-N-LA-N-NN
□ can be any value.
◊ must be CB, CD, CG, or CH.
○ must be NN or P1.
Any option code is available.

For PH202S, model and suffix code below is available.

PH202S-○-E
○ must be C or U.
There are no PH202S models that meet the Korean explosion proof standards.

- **Upper limit of process temperature on the PH8EFP, PH8ECP and OR8EFG**

Analyzer used in combination	FLXA202 FLXA21		PH202S	
Ambient temperature Ta / Temperature class	40°C	60°C	40°C	60°C
T6	16	16	28	28
T5	81	31	95 (*1)	43
T4	105	66	105	78
T3	105	105	105	105
T2	105	105	105	105
T1	105	105	105	105

*1: Care about upper limit 100°C of temperature class T5 should be taken.

- **Upper limit of process temperature on the PH8ERP, OR8ERG, PH8ECP and OR8EFG**

Analyzer used in combination	FLXA202 FLXA21		PH202S	
Ambient temperature Ta / Temperature class	40°C	60°C	40°C	60°C
T6	16	16	28	28
T5	80	31	80	43
T4	80	66	80	78
T3	80	80	80	80
T2	80	80	80	80
T1	80	80	80	80

- **Upper limit of process temperature on the PH8EHP**

Analyzer used in combination	FLXA202 FLXA21		PH202S	
Ambient temperature Ta / Temperature class	40°C	60°C	40°C	60°C
T6	16	16	28	28
T5	50	31	50	43
T4	50	50	50	50
T3	50	50	50	50
T2	50	50	50	50
T1	50	50	50	50

Other warnings are provided in the user's manual.

All Rights Reserved. Copyright © 2000, Yokogawa Electric Corporation

■ MODEL AND SUFFIX CODES

1. pH Sensor

● KCl Refillable Type pH Sensor

Model	Suffix Code	Option Code	Specifications
PH8ERP	.....	.....	KCl Refillable Type pH Sensor
Cable Length	**-03**	.....	3 m
	-05	.....	5 m
	-07	.....	7 m (*1)
	-10	.....	10 m
	-15	.....	15 m
	-20	.....	20 m
	-NN	.....	No cable (*2)
Solution Ground Material	**-TN**	.....	Titanium
	-HC	.....	Hastelloy C
Type	**-N**	.....	Always -N
Measuring System	**-E**	.....	For FLXA402, FLXA402T, PH202, FLXA202, FLXA21 (*3)
	-F	.....	For FLXA202, FLXA21 (*4)
	-G	.....	For FLXA402, FLXA402T, PH450G, PH202/TB (*5)
	-T	.....	For PH200, PH400 (*6)
	-B	.....	For PH100 (*7)
	-V	.....	Variopin connector (*8)(*9)
	-R	.....	Replacement sensor for -W, -X,or -Y (cable not included) (*8)(*9)
	-W	.....	Sensor with Variopin cable (pin terminal) (*9)(*10)
	-X	.....	Sensor with Variopin cable (M4 ring terminal) (*9)(*10)
	-Y	.....	Sensor with Variopin cable (M3 ring terminal) (*9)(*10)
Style code	***A**	.....	Style A
Option O-ring	**/PF**		Perfluoroelastomer (FFKM) (*11)
Special Glass Sensor	**/HA**		Glass electrode for high alkali (*12)
Special Junction	**/TF**		PTFE junction (*13)
Degreasing treatment	**/DG1**		Oil-free finish wetted part
Material Certificate	**/MC1**		With a material certificate of Solution Ground Tip
Calibration setting data	**/CAL**		With PH calibration setting data (*14)

*1: A cable length of 7 m cannot be combined with -W, -X, or -Y (Sensor with Variopin cable).
*2: Select -V for the Measuring System of SA11 and -R for the Sensor with Variopin cable (for maintenance).
*3: The cable has pin terminals.
When terminal box is used, select WTB10-PH1.
*4: The cable has M4 ring terminals.
When terminal box is used, select WTB10-PH5.
*5: The cable has M3 ring terminals.
When terminal box is used, select WTB10-PH3.
*6: The cable has fork terminals.
*7: The tag indicating the color, the sign, and the number is attached to the cables.
*8: The cable is not included.
Select -NN for the Cable Length. Select -V for the Measuring System of SA11 and -R for the Sensor with Variopin cable (for maintenance).
*9: Submersion type or Flow-through type holders can be combined.
Do not allow the part above the sensor flange to contact with the solution.
Avoid use in outdoor locations exposed to rain or in high-humidity environments where condensation may occur. If necessary, install appropriate rain protection.
*10: A Variopin cable and a sensor are included.
The terminal box cannot be used.
*11: Choose Perfluoroelastomer (FFKM) when this is used in organic solvent, high alkali or high temperature solution.
*12: Choose this option when this is used in high alkali or high temperature alkaline solution.
*13: Choose this when using in the heavily contaminated solution application.
*14: The product is shipped after being tested with pH7 and pH4 standard solutions. The calibration setting data labeled on the analog pH sensor body can be used with the FLXA402, FLXA402T, FLXA202, FLXA21, and PH450G. Cannot be used with -T, -B, -V, /HA, /TF, /DG1.
Calibration setting data is valid for 6 months after manufacture (*).
*: In an unused condition, storage at room temperature during this period may cause an approximate ±0.2 pH calibration shift when measured with a standard solution at 25°C.

● KCl Filling Type pH Sensor

Model	Suffix Code	Option Code	Specifications
PH8EFP	.....	.....	KCl Filling Type pH Sensor
Cable and KCl Tube Length	**-03**	.....	3 m
	-05	.....	5 m
	-07	.....	7 m (*1)
	-10	.....	10 m
	-15	.....	15 m
	-20	.....	20 m
	-V3	.....	For Variopin connector 3m (*2)
	-V5	.....	For Variopin connector 5m (*2)
	-V7	.....	For Variopin connector 7m (*2)
	-VA	.....	For Variopin connector 10m (*2)
	-VB	.....	For Variopin connector 15m (*2)
	-VC	.....	For Variopin connector 20m (*2)
Solution Ground Material	**-TN**	.....	Titanium
	-HC	.....	Hastelloy C
KCl Reserve Tank (*3)	**-TT1**	.....	For general purpose
	-TT2	.....	For medium pressure (*4)
	-TT3	.....	Big volume tank (With 500 mL tank)
	-TN1	.....	For maintenance (for -TT1, -TT3)
	-TN2	.....	For maintenance (for -TT2)
Type	**-N**	.....	Always -N
Measuring System	**-E**	.....	For FLXA402, FLXA402T, PH202, FLXA202, FLXA21(*5)
	-F	.....	For FLXA202, FLXA21 (*6)
	-G	.....	For FLXA402, FLXA402T, PH450G, PH202/TB (*7)
	-T	.....	For PH200, PH400 (*8)
	-B	.....	For PH100 (*9)
	-V	.....	Variopin connector (*10) (*11)
	-R	.....	Replacement sensor for -W, -X,or -Y (cable not included) (*10)(*11)
	-W	.....	Sensor with Variopin cable (pin terminal) (*11)(*12)
	-X	.....	Sensor with Variopin cable (M4 ring terminal) (*11)(*12)
	-Y	.....	Sensor with Variopin cable (M3 ring terminal) (*11)(*12)
Style Code	***A**	.....	Style A
Option Special Glass Sensor	**/HA**		Glass electrode for high alkali (*13)
Special junction	**/TF**		PTFE junction (*14)
O-ring	**/PF**		Perfluoroelastomer (FFKM) (*15)
Tube Material	**/FEP**		KCl tube: Fluororesin (*16)
Degreasing treatment	**/DG1**		Oil-free finish wetted part
Material Certificate	**/MC1**		With a material certificate of Solution Ground Tip
Calibration setting data	**/CAL**		With PH calibration setting data (*17)

*1: A cable length of 7 m cannot be combined with -W, -X, or -Y (Sensor with Variopin cable).
*2 The cable is not included. Only KCl tube is supplied.
Select -V for the Measuring System of SA11 and -R for the Sensor with Variopin cable (for maintenance).
*3: A 50A (2-inch) pipe mounting bracket is supplied with -TT1, -TT2 and -TT3.
Only supply tube is supplied, but KCl tank is not supplied for -TN1 or -TN2.
KCl solution is supplied with -TT1 and -TT3.
No KCl solution bottle is supplied for -TT2. Arrange it from accessories or auxiliary parts.

All Rights Reserved. Copyright © 2000, Yokogawa Electric Corporation

*4: Prepare an air pressure regulator as shown in the diagram below when the medium-pressure reserve tank is used.

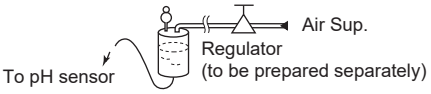

*5: The cable has pin terminals.
When terminal box is used, select WTB10-PH1.
*6: The cable has M4 ring terminals. When terminal box is used, select WTB10-PH5.
*7: The cable has M3 ring terminals.
When terminal box is used, select WTB10-PH3.
*8: The cable has fork terminals.
*9: The tag indicating the color, the sign, and the number is attached to the cable of a sensor.
*10 The cable is not included.
Select -V□ for the Cable length and KCl Tube Length.
Select -V for the Measuring System of SA11 and -R for the Sensor with Variopin cable (for maintenance).
*11 Submersion type or Flow-through type holders can be combined.
Do not allow the part above the sensor flange to contact with the solution.
Avoid use in outdoor locations exposed to rain or in high-humidity environments where condensation may occur. If necessary, install appropriate rain protection.
*12: A Variopin cable, the sensor, and a KCl tube are included. A terminal box cannot be used.
*13: Choose when using in high alkali or high temperature alkaline solution.
*14: Choose when using in the heavily contaminated application.
*15: Choose Perfluoroelastomer (FFKM) when this is used in organic solvent, high temperature alkaline solution.
*16: If you select -TT2 or -TN2 and use it in a place with strong ultraviolet rays, be sure to select this.
*17: The product is shipped after being tested with pH7 and pH4 standard solutions. The calibration setting data labeled on the analog pH sensor body can be used with the FLXA402, FLXA402T, FLXA202, FLXA21, and PH450G. Cannot be used with -T, -B, -V, /HA, /CJ, /TF, /DG1. Calibration setting data is valid for 6 months after manufacture (*).
*: In an unused condition, storage at room temperature during this period may cause an approximate ±0.2 pH calibration shift when measured with a standard solution at 25°C.

2. ORP Sensor

• KCl Refillable Type ORP Sensor

Model	Suffix Code	Option Code	Specifications
OR8ERG	.....	.....	KCl Refillable Type ORP Sensor
Electrode	**-AU**	.....	Gold
	-PT	.....	Platinum
Cable Length	**-03**	.....	3 m
	-05	.....	5 m
	-07	.....	7 m
	-10	.....	10 m
	-15	.....	15 m
	-20	.....	20 m
Measuring System	**-N**	.....	For OR200, OR400 (*1)
	-E	.....	For FLXA402, PH202, FLXA202, FLXA21 (*2)
	-F	.....	For FLXA202, FLXA21 (*5)
	-B	.....	For OR100 (*3)
	-G	.....	For FLXA402, PH450G,PH202/TB (*4)
Style	***A**	.....	Style A
Option O-ring	**/PF**		Perfluoroelastomer (FFKM) (*6)
Degreasing treatment	**/DG1**		Oil-free finish wetted part
Material Certificate	**/MC1**		With a material certificate of Solution Ground Tip

*1: Mark band is shown by alphanumeric and fork terminals are used.
*2: Mark band is shown by numeral and pin terminals are used.
When terminal box is used, select WTB10-PH1.
*3: The tag which indicated the color, the sign, and the number is attached to the cable of a sensor.
*4: Mark band is shown by numeral and M3 ring terminals are used.
When terminal box is used, select WTB10-PH3.
*5: Mark band is shown by numeral and M4 ring terminals are used.
When terminal box is used, select WTB10-PH5.
*6: Choose Perfluoroelastomer (FFKM) when this is used in organic solvent, high alkali or high temperature solution.

• KCl Filling Type ORP Sensor

Model	Suffix Code	Option Code	Specifications
OR8EFG	.....	.....	KCl Filling Type ORP Sensor
Electrode	**-AU**	.....	Gold
	-PT	.....	Platinum
Cable Length and KCl Tube Length	**-03**	.....	3 m
	-05	.....	5 m
	-07	.....	7 m
	-10	.....	10 m
	-15	.....	15 m
	-20	.....	20 m
KCl Reserve Tank (*1)	**-TT1**	.....	For general purpose
	-TT2	.....	For medium pressure (*2)
	-TN1	.....	For maintenance (for -TT1)
	-TN2	.....	For maintenance (for -TT2)
Measuring System	**-N**	.....	For OR200, OR400 (*3)
	-E	.....	For FLXA402, PH202, FLXA202, FLXA21 (*4)
	-F	.....	For FLXA202, FLXA21 (*7)
	-B	.....	For OR100 (*5)
	-G	.....	For FLXA402, PH450G.PH202/TB (*6)
Style	***A**	.....	Style A
Option Special junction	**/TF**		PTFE junction (*8)
O-ring	**/PF**		Perfluoroelastomer (FFKM) (*9)
Tube Material	**/FEP**		KCl tube: Fluororesin (*10)
Degreasing treatment	**/DG1**		Oil-free finish wetted part
Material Certificate	**/MC1**		With a material certificate of Solution Ground Tip

*1: A 50A (2-inch) pipe mounting bracket is supplied with -TT1 and -TT2.
The number of bottles filled with 250 mL KCl solution, which are supplied respectively, are as follows:
-TT1 : 1 bottle
-TT2 : 0 bottle
No KCl solution bottle is supplied for -TT2. Arrange it from accessories or auxiliary parts.
Only supply tube is supplied, but KCl tank is not supplied for -TN1 or -TN2.
*2: Prepare an air pressure regulator as shown in the diagram below when the medium-pressure reserve tank is used.

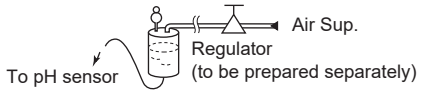

*3: Mark band is shown by alphanumeric and fork terminals are used.
*4: Mark band is shown by numeral and pin terminals are used.
When terminal box is used, select WTB10-PH1.
*5: The tag which indicated the color, the sign, and the number is attached to the cable of a sensor.
*6: Mark band is shown by numeral and M3 ring terminals are used.
When terminal box is used, select WTB10-PH3.
*7: Mark band is shown by numeral and M4 ring terminals are used.
When terminal box is used, select WTB10-PH5.
*8: Choose when using in the heavily contaminated application.
*9: Choose Perfluoroelastomer (FFKM) when this is used in organic solvent, high alkali or high temperature solution.
*10: If you select -TT2 or -TN2 and use it in a place with strong ultraviolet rays, be sure to select this.

All Rights Reserved. Copyright © 2000, Yokogawa Electric Corporation

3. pH Measuring System for High Purity Water

● pH Sensor for High Purity Water

Model	Suffix Code	Option Code	Specifications
PH8EHP	.....	.....	pH sensor for high purity water
Cable Length	**-03**	.....	3 m
	-05	.....	5 m
	-07	.....	7 m
	-10	.....	10 m
	-15	.....	15 m
	-20	.....	20 m
	-V3	.....	For Variopin connector 3m (*6)
	-V5	.....	For Variopin connector 5m (*6)
	-V7	.....	For Variopin connector 7m (*6)
	-VA	.....	For Variopin connector 10m (*6)
	-VB	.....	For Variopin connector 15m (*6)
	-VC	.....	For Variopin connector 20m (*6)
Solution Ground Tip	**-TN**	.....	Titanium
KCl Reserve Tank (*1)	**-TT1**	.....	For general purpose
	-TT3	.....	Big volume tank (With 500 mL tank)
	-TN1	.....	For maintenance (for -TT1, -TT3))
–	**-N**	.....	Always -N
Measuring System	**-H**	.....	For PH200, PH400 (*2)
	-E	.....	For FLXA402, FLXA402T, PH202, FLXA202, FLXA21 (*3)
	-F	.....	For FLXA202, FLXA21 (*5)
	-G	.....	For FLXA402, FLXA402T, PH450G, PH202/TB (*4)
	-V	.....	Variopin connector (*7)
Style	***A**	.....	Style A

*1: The number of bottles filled with 250 mL KCl solution, which are supplied respectively, are as follows:
-TT1 : 1 bottle
-TT3 : 2 bottles
Only a supply tube is supplied, but no KCl tank is supplied for -TN1.
*2: Mark band is shown by alphanumeric and fork terminals are used.
*3: Mark band is shown by numeral and pin terminals are used.
When terminal box is used, select WTB10-PH1.
*4: Mark band is shown by numeral and M3 ring terminals are used.
When terminal box is used, select WTB10-PH3.
*5: Mark band is shown by numeral and M4 ring terminals are used.
When terminal box is used, select WTB10-PH5.
*6 Select -V for a measuring system.
*7 Do not allow the part above the sensor flange to contact with the solution.

● pH Holder for High Purity Water

Model	Suffix Code	Option Code	Specifications
PH8HH	.....	.....	pH Holder for High Purity Water, wall-mount type
Connection ports	**-JPT**	.....	Rc1/4 (Inlet), Rc1/2 (Outlet)
	-NPT	.....	1/4NPT (Inlet), 1/2NPT (Outlet)
–	**-H**	.....	Always -H
Style	***A**	.....	Style A
Option Mounting Bracket		**/P**	Pipe mounting bracket

4. Terminal Box

● Terminal Box

Model	Suffix Code	Option Code	Specifications
WTB10	.....	.....	Terminal box
Combined System	**-PH1**	.....	For FLXA402, FLXA402T, PH202, FLXA202, FLXA21 (General sensor and PH4/OR4 sensor of pin terminals) (*6) (*7)
	-PH2	.....	For PH202, FLXA202, FLXA21 (PH4/OR4 sensor of pin terminals) (*1) (*6)
	-PH3	.....	For FLXA402, FLXA402T, PH450G, PH202/TB (General sensor and PH4/OR4 sensor of M3 ring terminals) (*4) (*7)
	-PH4	.....	For FLXA402, FLXA402T, PH450G, PH202/TB (PH4/OR4 sensor of M3 ring terminals) (*1) (*4)
	-PH5	.....	For FLXA202, FLXA21 (General sensor and PH4/OR4 sensor of M4 ring terminals) (*5) (*7)
	-PH6	.....	For FLXA202, FLXA21 (PH4/OR4 sensor of M4 ring terminals) (*1) (*5)
–	**-NN**	.....	Always -NN
Cable Length (*2)	**-00**	.....	0 m (*3)
	-05	.....	5 m
	-10	.....	10 m
	-15	.....	15 m
Option Mounting Bracket		**/P**	Pipe mounting bracket
		/W	Wall mounting bracket
Conduit Adapter		**/AWTB**	G1/2
		/ANSI	1/2NPT

*1: Use -PH2, -PH4, -PH6 of combined system when using adapter with temperature sensor (SA405) is used.
*2: For WTB10 of combined system, maximum cable length including sensor cable length should be 20 m.
*3: The dedicated extension cable should be used.
*4: M3 screw terminals and cable with M3 ring terminals are used.
*5: M4 screw terminals and cable with M4 ring terminals are used.
*6: M4 screw terminals and cable with pin terminals are used.
*7: Use -PH1, -PH3, -PH5 of combined system when not using SA405 in case of PH4/OR4.

All Rights Reserved. Copyright © 2000, Yokogawa Electric Corporation

5. Accessories

● Accessories for pH Meter

Model	Suffix Code	Option Code	Specifications
PH8AX	.....	.....	Accessories for pH meter (*1)
Calibration Reagents	**-L**	.....	Two bottles, each containing 250 mL solution (pH7 and pH4)
	-P	.....	24 bags, each bag containing powder for 500 mL solution (pH7 X 12 bags and pH4 X 12 bags) and two 500 mL polyethylene bottles.
Style	***A**	.....	Style A
Option (*2)		**/KCLL**	KCl solution (one 250 mL polyethylene bottle)
		/KCLP	KCl powder (three bags, 250 mL solution each)
		/STD	Sensor stand (with mounting bracket for 50A 2-inch pipe)

*1: Including the following:
Two 200 mL polypropylene cups
One cleaning bottle
*2: Either /KCLL or /KCLP is required for PH8EFP-□-□-TT2.

● Accessories for ORP Meter

Model	Suffix Code	Option Code	Specifications
OR8AX	.....	.....	Accessories for ORP meter (*1)
Style	***A**	.....	Style A
Option (*2)		**/KCLL**	KCl solution (one 250 mL polyethylene bottle)
		/KCLP	KCl powder (three bags, 250 mL solution each)
		/STD	Sensor stand (with mounting bracket for 50A 2-inch pipe)

*1: Including the following:
Two 200 mL polypropylene cups
One cleaning bottle
One pack of quinhydrone reagent powder (three bags, 250 mL solution each)
One 250 mL polyethylene bottle
*2: Either /KCLL or /KCLP is required for PH8EFP-□-□-TT2.

6. Spare Parts

● Spare Parts for pH Meter

Part Name		Part Number	Remarks
Glass electrode	General purpose	K9142TN	One for PH8ERP, PH8EFP, PH8EHP
		K9319NA	One for PH8ERP/PF, PH8EFP/PF
	High alkali	K9142TU	One for PH8ERP/HA, PH8EFP/HA
		K9319NC	One for PH8ERP/HA/PF, PH8EFP/HA/PF
Junction	General purpose	K9142TH	One for PH8ERP, PH8EFP
		K9319QA	One for PH8ERP, PH8EFP/PF
	High purity water	K9142TK	One for PH8EHP
	Fluororesin (PTFE)	K9142HW	One for PH8ERP/TF, PH8EFP/TF
		K9319QB	One for PH8ERP/TF/PF, PH8EFP/TF/PF
KCl solution (3.3 mol/L)		K9084LP	Six 250 mL polyethylene bottles
Buffer solution for calibration (pH4)		K9084LL	Six 250 mL polyethylene bottles
Buffer solution for calibration (pH7)		K9084LM	Six 250 mL polyethylene bottles
Buffer solution for calibration (pH9)		K9084LN	Six 250 mL polyethylene bottles
Powder for buffer solution (pH4)		K9020XA	12 bags,each for preparation of 500 mL
Powder for buffer solution (pH7)		K9020XB	12 bags, each for preparation of 500 mL
Powder for buffer solution (pH9)		K9020XC	12 bags, each for preparation of 500 mL
KCl powder (for PH8EFP, PH8EHP)		K9020XU	8 bags, each for preparation of 250 mL
KCl powder (for PH8ERP)		K9142UT	2 bags, 1 bottle of 3.3 mol/L KCl, 1 syringe
Protective cap		L9901BY	One for PH8ERP, PH8EFP (For preventing the drying out of glass electrodes and liquid junctions)

Note: The pH value of the calibrating buffer solution may vary depending on storage conditions.
Prepare a new solution from powder for accurate instrument calibration

● Spare Parts for ORP Meter

Part Name		Part Number	Remarks
Indicator electrode	Platinum	K9142TS	One for OR8ERG, OR8EFG
		K8022GP	One for OR8ERG/PF, OR8EFG/PF
	Gold	K9142TT	One for OR8ERG, OR8EFG
		K8022GQ	One for OR8ERG/PF, OR8EFG/PF
Junction	General purpose	K9142TH	One for OR8ERG, OR8EFG
		K9319QA	One for OR8EFG/PF, OR8EFG/PF
	Fluororesin (PTFE)	K9142HW	One for OR8FEG/TF
		K9319QB	One for OR8FEG/TF/PF
	Ceramics	K9142UH	One for OR8FEG/CJ
		K9142UL	One for OR8FEG/CJ/PF
KCl solution (3.3 mol/L)		K9084LP	Six 250 mL polyethylene bottles
KCl powder (for OR8EFG)		K9020XU	8 bags, each for preparation of 250 mL
KCl powder (for OR8ERG)		K9142UT	2 bags 1 bottle of 3.3 mol/L KCl, 1 syringe
Reagent for check	Quinhydrone	K9024EC	3 bags, each for preparation of 250 mL
	Iron	K9024ED	3 bags, each for preparation of 250 mL

All Rights Reserved. Copyright © 2000, Yokogawa Electric Corporation

■ WIRING DIAGRAMS

General purpose pH sensor

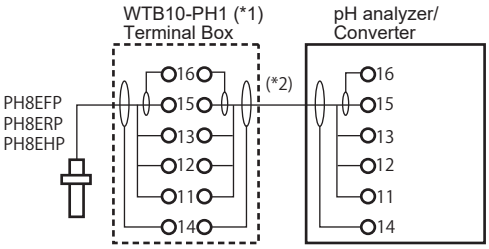

General purpose ORP sensor

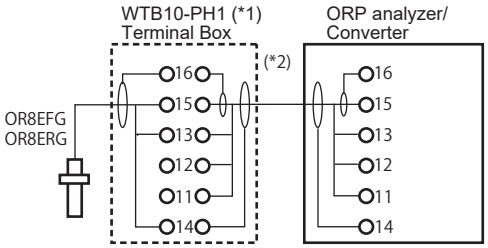

*1 : Terminal box is used only where pH analyzer/converter or ORP analyzer/converter is installed remotely from pH or ORP sensor (normally not needed).
Use this terminal box to connect to FLXA402, FLXA402T (except for ORP), PH202G, FLXA202/FLXA21 with pin terminals.
Use WTB10-PH3 terminal box to connect to FLXA402, FLXA402T (except for ORP), PH450G or PH202/TB with M3 ring terminals.
Use WTB10-PH5 terminal box to connect to FLXA202/FLXA21 with M4 ring terminals.
The terminal box cannot be used with Variopin cable(-W,-X,-Y).

*2 : This cable is specified in the option code for the terminal box.

All Rights Reserved. Copyright © 2000, Yokogawa Electric Corporation

■ DIMENSIONS

KCl refillable pH/ORP sensor
PH8ERP-☐
OR8ERG-☐ *

Unit : mm

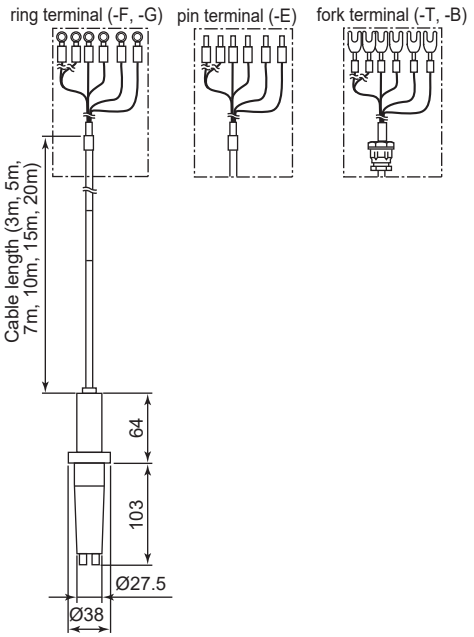

* Numbers of terminal for ORP sensor is four.

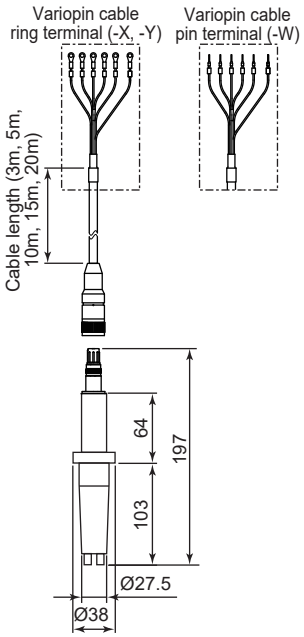

Variopin connecter (-V)
Replacement sensor (-R)
Sensor with Variopin cable (-W, -X, -Y)

KCl filling pH/ORP sensor
PH8EFP-☐
OR8EFG-☐ *

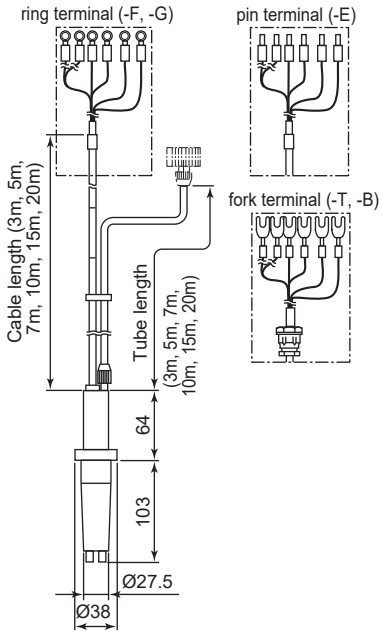

* Numbers of terminal for ORP sensor is four.

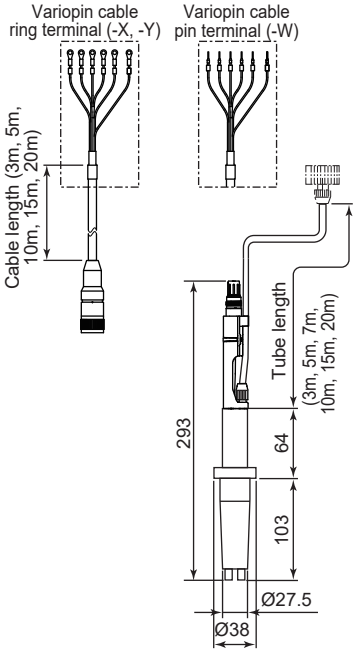

Variopin connecter (-V)
Replacement sensor (-R)
Sensor with Variopin cable (-W, -X, -Y)

All Rights Reserved. Copyright © 2000, Yokogawa Electric Corporation

pH sensor for pure water
PH8EHP-☐

Unit : mm

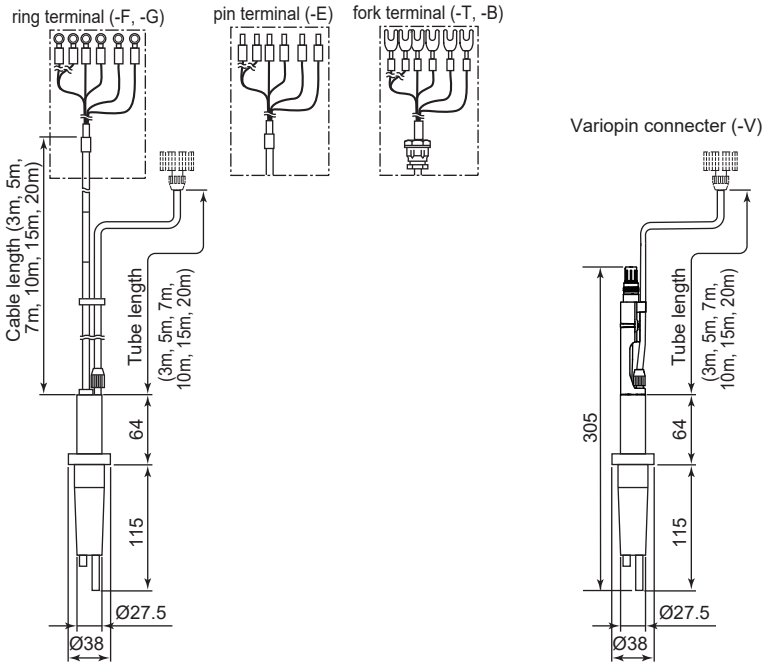

General purpose KCl reserve tank for KCl filling pH/ORP sensor and pH sensor for high purity water (with mounting bracket)
(PH8EFP-☐)-TT1
(PH8EHP-☐)-TT1
(OR8EFG-☐)-TT1

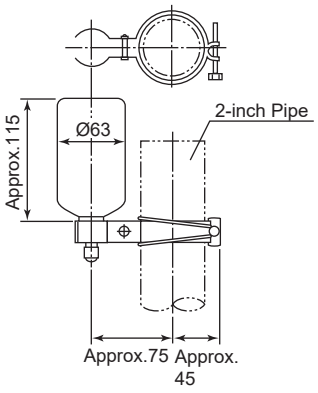

Medium pressure KCl reserve tank for KCl filling pH/ORP sensor (with mounting bracket)
(PH8EFP-☐)-TT2
(OR8EFG-☐)-TT2

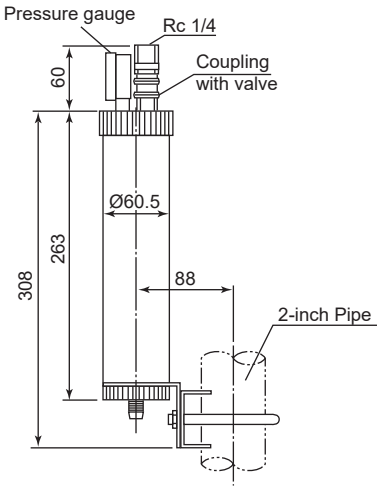

Big volume tank KCl reserve tank for KCl filling pH sensor and pH sensor for high purity water (with mounting bracket)
(PH8EFP-☐)-TT3
(PH8EHP-☐)-TT3

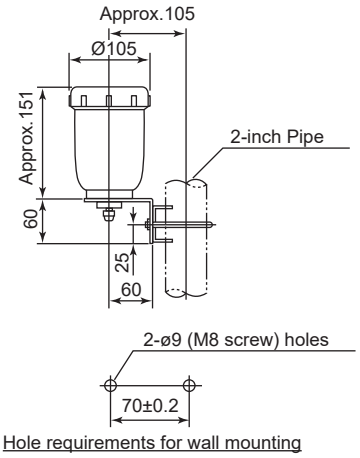

All Rights Reserved. Copyright © 2000, Yokogawa Electric Corporation

Holder for high purity water PH8HH

Unit : mm

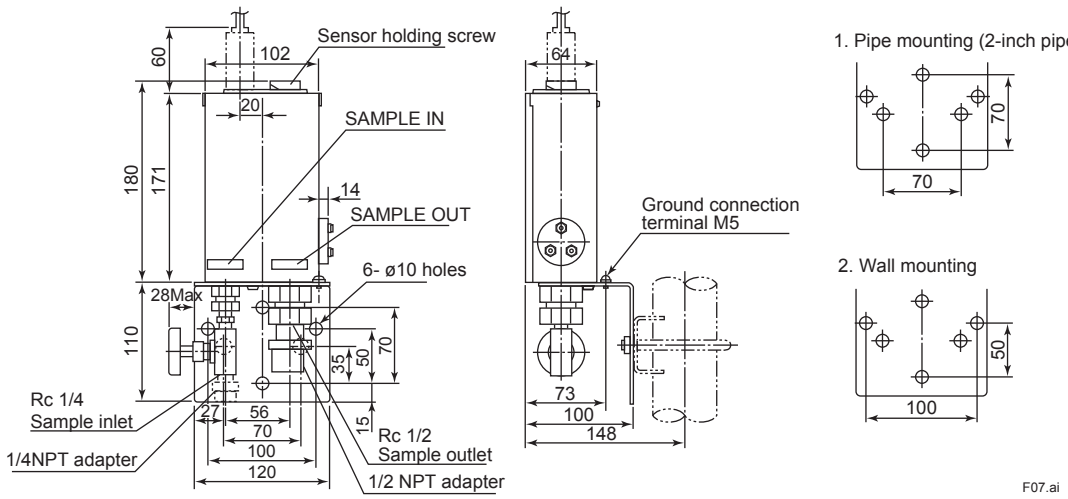

Hole dimensions for Holder mounting

Unit : mm

Sensor stand
(PH8AX-☐)/STD
(OR8AX-☐)/STD

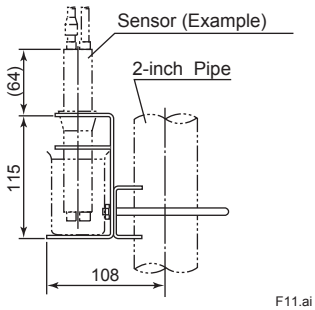

All Rights Reserved. Copyright © 2000, Yokogawa Electric Corporation

Unit : mm

Terminal box WTB10-PH1, -PH3, -PH5

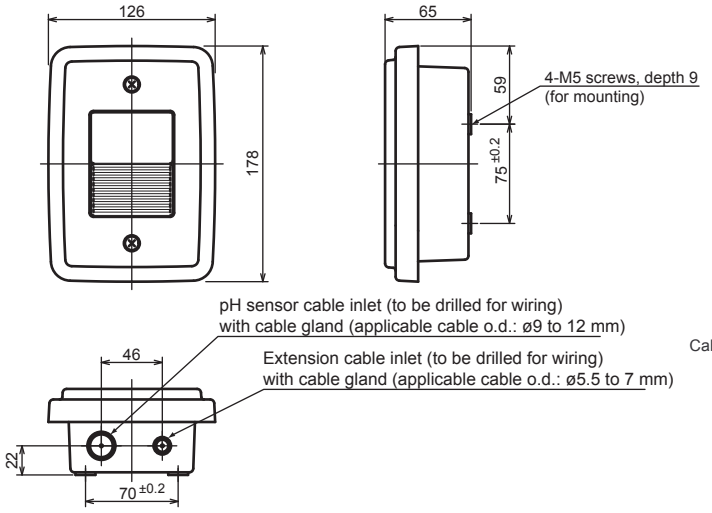

Conduit adapter

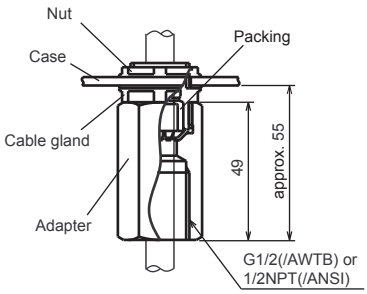

Terminal box WTB10-PH2, -PH4, -PH6

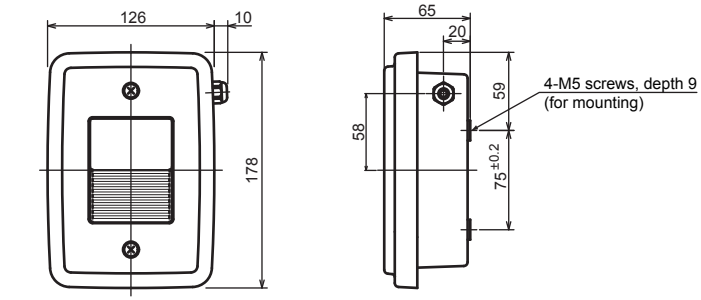

Model and code	L
WTB10 - PH☐ - NN - 05	Approx. 5 000
WTB10 - PH☐ - NN - 10	Approx. 10 000
WTB10 - PH☐ - NN - 15	Approx. 15 000

Extension cable

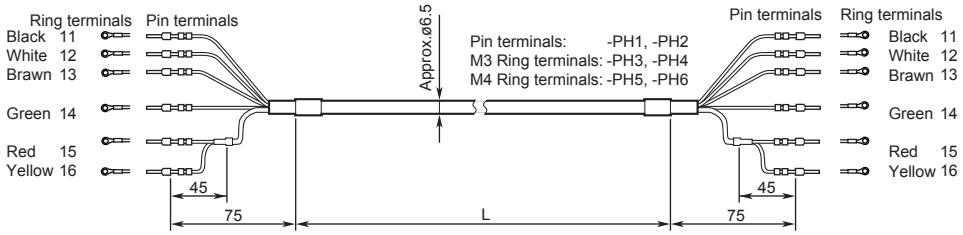

Mounting bracket for terminal box

<Pipe mounting bracket: /P>

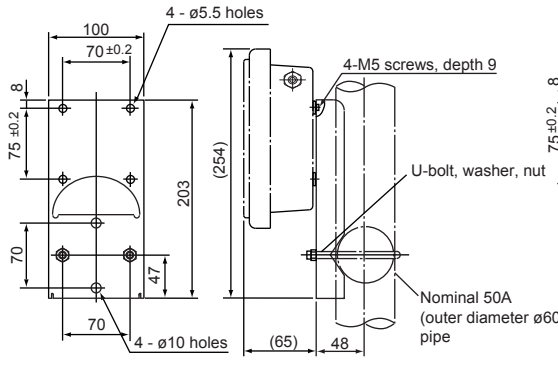

<Wall mounting bracket: /W>

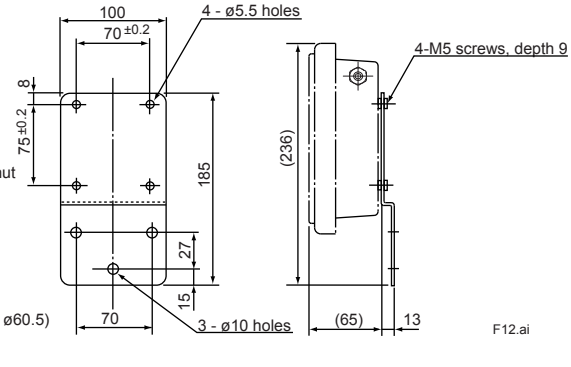

F12.ai

All Rights Reserved. Copyright © 2000, Yokogawa Electric Corporation

■ SELECTION CRITERIA FOR pH/ORP SENSOR AND HOLDER

<General Overall Criteria>

(1) When any of the two conditions listed below are applicable, select a KCl filling type pH sensor and either the submersion or flow-through type holder.
- The solution is out of the range 2 < pH < 12.
- The solution contains organic or oil in the order of a few percent.

(2) When any of the two conditions listed below are applicable, consult our salesperson.
- Strong oxidizing solutions such as aqua regia, chromic acid , hypochlorous acid, perchloric acid.
- The solution contains corrosive gases (ammonia, chlorine, hydrogen sulfide).

(3) Select the material of wetted parts with careful consideration of process characteristics. Inappropriate selection may cause leakage of process fluids, which greatly affects facilities. Considerable care must be taken particularly in the case of strongly corrosive process fluid such as hydrochloric acid, sulfuric acid, hydrogen sulfide, and sodium hypochlorite. If you have any questions about the wetted part construction of the product, be sure to contact Yokogawa.

<Individual Criteria>

1: Can be used, 2: Shortens useful life, N/A: Cannot be used

	Chemical	Concentration W/V (%)	pH *1 (25°C)	Holder	
				Flow-through, Submersion	Guide-pipe
Inorganic acid	Sulfuric acid	0.5	1.0	1	N/A
		0.05	2.0	1	1
	Hydrochloric acid	0.4	1.0	1	N/A
		0.04	2.0	1	1
	Nitric acid	0.6	1.0	1	N/A
		0.06	2.0	1	1
	Phosphoric acid	1.0	1.5	1	2
	Boric acid	0.6	5.0	1	1
	Carbonic acid	0.6	3.6	1	2
	Chromic acid	1.2	0.8	1	N/A
	Sulfurous acid	0.8	1.4	1	2
Organic acid	Acetic acid	0.6	2.8	1	1
	Formic acid	0.5	2.3	1	1
	Oxalic acid	0.9	1.0	1	1
	Lactic acid	0.9	2.4	1	1
	Phenol acid	0.9	5.4	1	2
	Monochloroacetic acid	0.9	1.8	1	N/A
Alkali	Calcium hydroxide	0.2	12.4	1	1
	Potassium hydroxide	0.5	12.7	1	2
	Sodium hydroxide	0.4	12.9	1	2
Acid salts	Ammonium chloride	5		1	1
	Aluminous water	5		1	1
	Zinc chloride	5		1	1
	Ferric chloride	5		1	1
	Ferric nitrate	5	1.3	1	2
Basic salts	Sodium sulfite	5		1	1
	Sodium carbonate	5	11.8	1	1
	Sodium phosphate	5		1	2
Neutral salts	Potassium chloride	5		1	1
	Sodium sulfate	5		1	1
	Calcium chlorine	5		1	1
	Sodium nitrate	5	8.2	1	N/A
	Aluminum chloride	5		1	1
Oxidizing agents	Hydrogen peroxide	1		1	1
	Sodium hypochlorite solution	1	12.5	1	2
	Chlorinated lime	1		1	2
	Potassium bichromate	5	4.5	1	1
Organic solvents	Alcohol	10		1	2
	Organic solvent or oil (excluding alcohol)			1	N/A

*1: pH values in table are calculated from dissociation constant (including measured value).

All Rights Reserved. Copyright © 2000, Yokogawa Electric Corporation

Table of Corrosion-Resistant Materials (The data should be used for reference only)

This table shows corrosion resistance for each single substance alone. If a sample contains two or more substances, the corrosion resistance may differ from that given in this table. The three columns in each cell read from the left: Concentration (%); Temperature (°C), Level of corrosion resistance.The corrosion resistance level; ◎: Excellent: ○:Good , △: poor ,×: unusable. "b" in the table refers to boiling point of each solution.

		Holder material												Seal O-ring material	Sensor body material			Remarks
		Ultrasonic transducer material Sensor solution ground tip																
		Polypropylene			316 SS			Hastelloy C			Titanium			Fluoro rubber (FKM)	PPS resin			
Inorganic acid	Sulfurous acid	100	20	◎	6	30	◎	6	30	○	6	30	◎		–			
			90	◎														
	Hydrochloric acid	5	20	◎	5	30	×	5	30	◎	5	30	◎		5	30	◎	
		5	80	◎							5	b	×		37	60	△	
															37	90	×	
	Chromic acid	20	20	△	10	b	○	20	30	○	10	b	◎		20	20	○	
		20	40	×														
	Hypochlorous Acid	10	20	◎	14	30	×	15	43	◎	20	40	◎		5	20	○	
		10	40	○										Strong acid ◎		40	×	
	Hydrobromic acid		–			–			–		40	30	◎	Weak acid ◎		–		
	Nitric acid	10	20	◎	10	30	◎	10	30	◎	10	100	○		5	20	○	
		10	80	◎											10	60	×	
	Hydroiodic acid	57	20	◎	57	25	×		–		57	30	○			–		
		57	70	◎														
	Sulfuric acid	3	20	◎	6	30	◎	5	30	◎	5	30	◎		90	20	◎	
		3	100	◎	5	100	×	5	70	◎	5	100	×		30	90	○	
	Phosphoric acid	30	60	◎	15	30	◎	5	30	◎	5	30	◎		85	90	◎	
		30	100	△	5	b	◎	5	b	◎	5	60	○					
Alkali	Ammonia water	15	80	◎	10	b	◎	10	b	◎	10	b	◎		15	30	◎	
		15	100	○	28	65	◎	20	65	◎	20	65	◎					
	Potassium hydroxide		–		10	b	◎	10	b	◎	10	b	◎		10	20	◎	
					25	b	◎	25	b	◎	25	b	○		10	90	△	
	Sodium hydroxide	20	80	◎	20	30	◎	20	30	◎	20	30	◎		10	20	◎	
		20	100	◎	20	b	◎	20	b	◎	20	b	◎	Strong alkali ×	10	90	△	
	Sodium hydroxide, Sodium hydroxide 9 to 11% +Sodium chloride 15%		100	◎		–			–			93	◎	Weak alkali△		90	○	
	Potassium carbonate		–		5	b	◎	5	b	◎	5	b	◎		5	b	◎	
					35	b	◎	35	b	◎	35	b	○		35	b	○	
	Sodium carbonate	sat.	100	◎	25	b	◎	25	b	◎	25	b	◎		25	90	◎	
Chlorides	Zinc chloride		–		20	b	△	20	b	◎	20	b	◎	–		–		
	Aluminum chloride		–		25	25	×		–		10	b	◎	–		–		
					25	25	×				25	b	×					
	Ammonium chloride	35	40	◎	25	b	△	25	b	◎	25	b	◎	–	25	90	◎	
	Potassium chloride	sat.	60	◎	sat.	60	◎	sat.	60	◎	sat.	60	◎	–	20	90	◎	
	Calcium chloride	sat.	80	◎	25	b	○	25	b	◎	25	b	◎	–	25	90	◎	
		sat.	100	◎														
	Ferric chloride	20	40	◎	30	b	×	30	b	×	30	b	◎	–	20	60	◎	
		20	60	◎														
	Sodium chloride, 20% + Saturated Cl2 (Electrolysis solution)		100	◎		90	×		90	×		90	◎	–		20	△	
	Seawater, Magnesium chloride		24	◎		24	△					24	◎	–		24	◎	
		sat.	80	◎	42	b	△	42	b	◎	40	b	◎			80	○	

All Rights Reserved. Copyright © 2000, Yokogawa Electric Corporation

		Holder material	Ultrasonic transducer material Sensor solution ground tip			Seal O-ring material	Sensor body material	Remarks
		Polypropylene	316 SS	Hastelloy C	Titanium	Fluoro rubber (FKM)	PPS resin	
Sulfates	Ammonium sulfate	5 60 ◎ ◎	20 b ◎ sat. 30	20 b ◎ sat. 30 ◎	20 b ◎ sat. 30 ◎	–	10 90 ◎	Poly-propylene may sometimes be eroded by ammonium sulfate crystals
	Potassium sulfate	–	10 b ◎	10 b ◎	10 b ◎	–	10 90 ◎	
	Sodium sulfate	Corrosion resistance is good for usual salts.	20 b ◎	20 b ◎	20 b ◎	–	10 90 ◎	
Nitrates	Ammonium nitrate		20 b ◎	20 b ◎	20 b ◎	–	10 90 ◎	
	Sodium nitrate		50 b ◎	–	50 b ◎	–	–	
Others	Sodium sulfite		20 b ◎	–	20 b ◎	–	–	
	Hydrogen peroxide		10 30 ◎	–	10 30 ◎	–	10 30 ◎	
	Sodium sulfide	30 90 ◎ 20 80 ◎	2 60-90 ×	2 60-90 △	15 30 ◎	–	5 90 ◎	
	Potassium bichromate		10 b ◎	10 b ◎	10 b ◎	–	–	
	Sodium sulfide	60 80 ◎	10 b ◎	–	10 b ◎	–	10 90 ◎	
	Sodium bisulfate	–	10 b △	–	10 b ◎	–	–	
Gases	Wet chlorine gas	20 ○ 40 △ 60 ×	30 ×	30 △	30 ◎	–	20 ×	
	Sea water + Saturated Cl2	–	95 ×	95 △	95 ◎	–	–	
	Bromine gas	–	–	30 ◎	30 ◎	–	30 ×	
	Hydrogen sulfide	–	20 ◎	–	20 ◎	–	–	
	Sulfurous acid gas	80 ◎ 100 ◎	–	–	30-90 ◎	–	80 ◎	
Organic substances	Acetaldehyde	20 ◎	100 30 ◎	–	–	–	100 20 ○	
	Acetone	100 20 ○	50 25 ◎ 100 110 ◎	–	–	100 25 ×	100 b ○	
	Aniline	100 20 ◎ 100 70 ○ 100 100 △	100 25 ◎	–	–	–	100 90 ○	
	Ether	100 20 △	100 25 ◎	–	–	–	100 20 ◎	
	Ethylene glycol	100 70 ◎ 100 100 ◎	100 25 ◎	–	–	–	–	
	Ethyl alcohol	96 70 ◎	100 b ◎	–	–	–	100 90 ◎	
	Methyl chloride	100 20 ×	100 25 ◎	–	–	–	–	
	Glacial acetic acid	100 70 ◎ 100 100 ○	–	–	–	100 24 ×	100 20 ◎	
	Glycerin	100 70 ◎ 100 100 ◎	100 25 ◎	–	–	–	–	
	Chlorophenol	100 20 ◎ 100 70 △ 100 100 ×	–	–	–	–	100 20 ◎	
	Xylene	100 20 ×	–	–	–	–	100 20 ◎	
	Chlorobenzene	100 20 ×	–	–	–	–	–	
	Chloroform	100 20 ×	100 b ◎	100 b ◎	100 b ◎	–	100 90 △	
	Dioxane	100 20 ◎ 100 70 △ 100 100 ×	–	–	–	–	100 90 ◎	
	Dichloroethane	100 70 ×	–	–	–	–	–	
	Ethyl nitrate	100 20 ◎ 100 △	100 105 ◎	–	–	–	100 90 ○	
	Carbon tetrachloride	100 20 ×	90 b △	–	90 b ◎	100 24 ×	–	
	Trichloroethylene	100 20 ×	100 b ○	100 b ◎	100 b ◎	–	100 90 ×	

All Rights Reserved. Copyright © 2000, Yokogawa Electric Corporation

		Holder material	Ultrasonic transducer material Sensor solution ground tip			Seal O-ring material	Sensor body material	Remarks
		Polypropylene	316 SS	Hastelloy C	Titanium	Fluoro rubber (FKM)	PPS resin	
	Toluene	100 20 ×	–	–	145 ◎	–	100 90 ◎	
	Benzophenone	–	–	–	–	–	–	
	Benzaldehyde	100 20 ◎ 100 70 ○ 100 100 ×	–	–	–	–	100 20 △ 100 90 ×	
	Benzyl alcohol benzene	100 20 ◎	100 30 △	–	100 30 ○	100 25 ○	100 90 ◎	
	Formaldehyde	10 70 ◎ 10 100 ◎	37 b ◎	37 b ◎	37 b ◎	–	–	
Organic substances	Methylnaphthalene	◎	–	–	–	–	–	
	Methyl ethyl ketone	100 20 ○ 70 △	–	–	–	–	100 90 ◎	
	Methyl alcohol	100 20 ◎	100 25 ◎	–	–	–	100 25 ◎	
	Nitrobenzene	100 20 ◎ 100 70 ○ 100 100 ×	–	–	–	–	100 90 ×	
	Acetic acid	100 20 ◎ 100 70 △ 100 100 ×	10 b ◎	–	10 b ◎	–	–	
	Phenol	100 20 ◎ 100 100 ○	95 30 ◎	95 30 ○	95 30 ◎	–	100 90 △	
	Benzonic acid	100	–	–	–	–	–	
	Motor oil	100 20 ◎ 100 70 ○ 100 100 △	–	–	–	–	100 20 ◎	
	Petroleum ether	100 20 ◎	–	–	–	–	100 20 ○	
	Kerosene	100 20 ○ 100 70 ×	–	–	101 ◎	–	100 20 ○	
	Tartaric acid	10 40 ◎ 10 60 ○ 10 80 △	50 100 △	50 100 △	50 100 ◎	–	–	
	Oil and fats	100 70 ◎	100 25 ◎	100 180 ◎	100 180 ◎	–	–	
	Carbon sulfide	100 20 ×	100 25 ◎	–	–	100 25 ◎	–	

CAUTION

Select the material of wetted parts with careful consideration of process characteristics. Inappropriate selection may cause leakage of process fluids, which greatly affects facilities. Considerable care must be taken particularly in the case of strongly corrosive process fluid such as hydrochloric acid, sulfuric acid, hydrogen sulfide, and sodium hypochlorite. If you have any questions about the wetted part construction of the product, be sure to contact Yokogawa.

All Rights Reserved. Copyright © 2000, Yokogawa Electric Corporation

Enquiry Specifications Sheet for pH/ ORP Sensor

For enquires on the Yokogawa pH/ORP sensors, please tick (v) the appropriate box ☐ and write down the relevant information in the blanks.

1. General Information

Company name ;_____
_____
Contact Person ;_____
Department;_____
_____
Plant name ;_____
_____
Measurement location ;_____
_____
Purpose of use ; ☐ Indication, ☐ Recording, ☐ Alarm, ☐ Control
Power supply ;_____V
AC, Hz

2 Measurement Conditions

(1) Process temperature;_____to_____
Normally [°C]
(2) Process pressure ;_____to_____
Normally [kPa]
(3) Flow rate ;_____to_____
Normally [L/min]
(4) Flow speed ;_____to_____
Normally [m/s]
(5) Slurry or contaminants ; ☐ No, ☐ Yes_
_____
(6) Name of process fluid ; _____
_____
(7) Components of process fluid ; _____
_____
(8) Others ; _____
_____

3. Installation Site

(1) Ambient temperature ; _____
_____
(2) Location ; ☐ Outdoors,☐ Indoors___
_____
(3) Others ; _____
_____

4. Requirements

(1) Measuring range ; ☐ pH 0 to 14, ☐ _____
(2) Combined analyzer ; ☐ FLXA202, ☐ FLXA21, ☐ FLXA402, ☐ FLXA402T, ☐ PH450, ☐ PH202, ☐ PH400, ☐ OR400, ☐ PH100, ☐ OR100, ☐ _____
(3) System configuration selection; ☐ Sensor, ☐ Holder, ☐ pH/ ORP Analyzer/ Converter, ☐ Cleaning system, ☐ Terminal box, ☐ Accessories
(4) Sensor cable length ; ☐ 3 m, ☐ 5 m, ☐ 7 m, ☐ 10 m, ☐15 m, ☐ 20 m, ☐____ m
(5) Sensor operating pressure ; ☐10 kPa or less, ☐ Greater than 10 kPa
(6) Type of holder ; ☐ Guide pipe, ☐ Submersion, ☐ Flow-through, ☐ Suspension, ☐ Angled floating ball, ☐ Vertical floating ball
(7) Cleaning method ; ☐ No cleaning, ☐ Ultrasonic cleaning, ☐ Jet cleaning, ☐ Brush cleaning
(8) Sample temperature ; ☐ -5 to 105°C, ☐ -5 to 100°C, ☐ -5 to 80°C
(9) Others ; _____
_____
_____

All Rights Reserved. Copyright © 2000, Yokogawa Electric Corporation
Subject to change without notice.