General Specifications

FLXA202
2-Wire Analyzer

GS 12A01A03-01EN

■ General

The FLXA™202 2-Wire Analyzer, one model of FLEXA™ series, offers single or dual sensor measurement. The modular-designed analyzer offers 4 kinds of measurements – pH/ORP (oxidation-reduction potential), contacting conductivity (SC), inductive conductivity (ISC) or dissolved oxygen (DO) – with the respective sensor module.

In addition to the conventional analog connections, digital sensor measurement using SA11 SENCOM™ Smart Adapter is available.

For dual sensor measurement, the combination of two same type analog sensor inputs – pH/ORP and pH/ORP, SC and SC, and DO and DO – are available with two sensor modules. Dual sensor measurement offers additional functionalities; calculated data function and redundant system.

Variety of calculated data from two measuring parameters is selectable for each measurement. On the redundant system built on two measuring parameters of two sensor inputs, main output parameter is automatically switched over to the second sensor output in case of the main sensor's failure condition.

In the FLXA202 Human Machine Interface (HMI), 2-wire type analyzer FLXA202 offers easy touch screen operation and simple menu structure in 12 languages. Menus of display, execution and setting are displayed in a selected language.

The analyzer FLXA202 automatically recognizes the installed sensor module and prepares the necessary menus for right configuration, even for dual sensor measurement.

For immediate measurement, the FLXA202 offers quick setup functionality. The quick setup screen appears when the analyzer is powered. Only a few setups – date/time, language, basic sensor configurations and output – will start the measurement.

The FLXA202 offers the best accuracy in measurement with temperature compensation functionality and calibration functionality. Sensor diagnostics and sensor wellness indication make measurement reliable. Logbook of events and diagnostic data is a useful information source for maintenance.

For the wide range of industrial environment, the FLXA202 is designed with the enclosure of aluminum alloy cast with corrosion-resistant coating.





■ Features

- 4 kinds of measurements; pH/ORP, SC, ISC and DO
- Dual sensor measurement on 2-wire type analyzer; pH/ORP and pH/ORP (*), SC and SC (*), and DO and DO
  - (*): Only one dedicated digital sensor with SA11 SENCOM Smart Adapter is available for each measurement.
  - Note: Only one SC sensor is available for SC measurement.
- Calculated data from dual sensor measurement
- Redundant system on dual sensor measurement
- Easy touch screen operation on 2-wire type analyzer
- Simple HMI menu structure in 12 languages
- Quick setup menu for immediate measurement
- Indication of sensor wellness
- Enclosure – aluminum alloy cast.

FLEXA, FLXA, SENCOM are trademarks or registered trademarks of Yokogawa Electric Corporation.
All other company and product names mentioned in this document are trademarks or registered trademarks of their respective companies.

Please select appropriate equipment in accordance with the laws and regulations of the relevant country/region, when it is used in a location where explosive atmospheres may be present.

YOKOGAWA

Yokogawa Electric Corporation
2-9-32, Nakacho, Musashino-shi, Tokyo, 180-8750 Japan

GS 12A01A03-01EN
©Copyright Sep. 2015
15th Edition Feb. 27, 2026

■ General Specifications

1. Basic

■ **Measurement Object/Sensor Type**
- pH/Oxidation-reduction Potential (pH/ORP)
- Conductivity (SC)
- Inductive Conductivity (ISC)
- Dissolved Oxygen (DO)

Note: The available measurement object depends on a sensor module installed on the analyzer.

■ **Analyzer Structure**
Module structure

● **Composition of Analyzer**
One (1) Housing assembly
One (1) or two (2) Sensor modules

● **Combination of Sensor Module when two modules are installed**
Combinations of two same sensor modules are available;
pH/ORP and pH/ORP
SC and SC
DO and DO

2. Measurement

2-1. pH/Oxidation-reduction Potential (pH/ORP)
Refer to page 3 for SA11 SENCOM SA connection.

■ **Input Specification**
Dual high impedance input (≥10^{12} Ω)

■ **Input Range**
pH: -2 to 16 pH (with option /K: 0 to 14 pH)
ORP: -1500 to 1500 mV
rH: 0 to 100 rH
Temperature:
Pt1000: -30 to 140 ºC
Pt100: -30 to 140 ºC
6.8k: -30 to 140 ºC
PTC10k: -30 to 140 ºC
NTC 8k55: -10 to 120 ºC
3k Balco: -30 to 140 ºC
PTC500: -30 to 140 ºC

■ **Output Range**
pH: min. span 1 pH
max. span 20 pH
ORP: min. span 100 mV
max. span 3000 mV
rH: min. span 2 rH
max. span 100 rH
Temperature: min. span 25 ºC
max. span 170 ºC

■ **Performance (Accuracy)**
(The specifications are expressed with simulated inputs.)
pH
Linearity: ±0.01 pH
Repeatability: ±0.01 pH
Accuracy: ±0.01 pH
ORP
Linearity: ±1 mV
Repeatability: ±1 mV
Accuracy: ±1 mV
Temperature
with Pt1000, 6.8k, PTC10k, NTC 8k55, 3k Balco, PTC500
Linearity: ±0.3 ºC
Repeatability: ±0.1 ºC
Accuracy: ±0.3 ºC
with Pt100
Linearity: ±0.4 ºC
Repeatability: ±0.1 ºC
Accuracy: ±0.4 ºC

2-2. Conductivity (SC)
Refer to page 3 for SA11 SENCOM SA connection.

■ **Input Specification**
Two or four electrodes measurement with square wave excitation, using max 60m (200ft) cable (WU40/WF10) and cell constants from 0.005 to 50.0 cm^{-1}

■ **Input Range**
Conductivity:
min.: 0 µS/cm
max.: 200 mS x (Cell constant)
(over range 2000 mS/cm)
Resistivity:
min.: 0.005 kΩ / (Cell constant)
max.: 1000 MΩ x cm
Temperature:
Pt1000: -20 to 250 ºC
Pt100: -20 to 200 ºC
Ni100: -20 to 200 ºC
NTC 8k55: -10 to 120 ºC
Pb36(JIS NTC 6k): -20 to 120 ºC

■ **Output Range**
Conductivity:
min. 0.01 µS/cm
max. 2000 mS/cm (max 90% zero suppression)
Resistivity:
min. 0.001 kΩ x cm
max. 1000 MΩ x cm (max 90% zero suppression)
Temperature:
min. span 25 ºC
max. span 270 ºC

■ **Performance (Accuracy)**
(The specifications are expressed with simulated inputs.)
Conductivity
2 µS x K cm^{-1} to 200 mS x K cm^{-1}
Accuracy: ±0.5%F.S.
1 µS x K cm^{-1} to 2 µS x K cm^{-1}
Accuracy: ±1%F.S.
Resistivity
0.005kΩ / K cm^{-1} to 0.5MΩ /K cm^{-1}
Accuracy: ±0.5%F.S.
0.5MΩ / K cm^{-1} to 1MΩ /K cm^{-1}
Accuracy: ±1%F.S.
Temperature
with Pt1000, Pb36, Ni100
Accuracy: ±0.3 ºC
with Pt100, NTC 8k55
Accuracy: ±0.4 ºC
Temperature compensation
NaCl table: ±1 %
Matrix: ±3 %
Step response: 90 % (< 2 decades) in 7 seconds
Note: "F.S." means maximum setting value of analyzer output.
"K" means cell constant.
YOKOGAWA provides conductivity sensors of which cell constants are 0.1 to 10 cm^{-1}.

All Rights Reserved. Copyright © 2015, Yokogawa Electric Corporation

2-3. Inductive Conductivity (ISC)

■ **Input Specification**

Compatible with the Yokogawa inductive conductivity ISC40 series with integrated temperature sensor: NTC30k or Pt1000.

■ **Input Range**

Conductivity: 0 to 2000 mS/cm at 25 ºC reference temperature.
Temperature: -20 to 140 ºC
Cable length:
max. 60 meters total length of fixed sensor cable + WF10(J) extension cable. Influence of cable can be adjusted by doing an AIR CAL with the cable connected to a dry cell.

■ **Output Range**

Conductivity:
min. span: 100 µS/cm
max. span: 2000 mS/cm (max 90% zero suppression)
Temperature:
min. span 25 ºC
max. span 160 ºC

■ **Performance (Accuracy)**

(The specifications are expressed with simulated inputs.)
(Output span is 0-100 µS/cm or more)
Conductivity:
Linearity: ±(0.4 %F.S. + 0.3 µS/cm)
Repeatability: ±(0.4 %F.S. + 0.3 µS/cm)
Temperature: ±0.3 ºC
Step response: 90 % (< 2 decades) in 8 seconds
Note: "F.S." means maximum setting value of analyzer output.

2-4. Dissolved Oxygen (DO)

■ **Input Specification**

The FLXA202 accepts output from membrane covered Dissolved Oxygen sensors. These sensors can be Galvanic type, where the sensor generates its own driving voltage or Polarographic type, where the sensor uses external driving voltage from the converter.
The input range is 0 to 50 µA for Galvanic sensors and 0 to 1 µA for Polarographic sensors.
For temperature compensation, the FLXA202 accepts Pt1000 (DO30 sensor) and NTC22k elements (OXYFERM and OXYGOLD sensors).

■ **Input Range**

Dissolved Oxygen: 0 to 50 mg/l (ppm)
Temperature: -20 to 150 ºC
DO30G sensor:
Measurement range: 0 to 20 mg/l (ppm)
Temperature: 0 to 40 ºC
Hamilton sensors:
Oxyferm:
Measurement range: 10 ppb to 40 ppm
Temperature range: 0 to 130 ºC
Oxygold G:
Measurement range: 2 ppb to 40 ppm
Temperature range: 0 to 130 ºC
Oxygold B:
Measurement range: 8 ppb to 40 ppm
Temperature range: 0 to 100 ºC

■ **Output Range**

DO concentration:
mg/l (ppm):
min.: 1 mg/l (ppm)
max.: 50 mg/l (ppm)
ppb:
min.: 1 ppb
max.: 9999 ppb
% saturation:
min.: 10 %
max.: 600 %
Temperature:
min. span 25 ºC
max. span 170 ºC

■ **Performance (Accuracy)**

(The specifications are expressed with simulated inputs.)
Performance in ppm mode:
Linearity: ±0.05 ppm or ±0.8% F.S., whichever is greater
Repeatability: ±0.05 ppm or ±0.8% F.S., whichever is greater
Accuracy: ±0.05 ppm or ±0.8% F.S., whichever is greater
Performance in ppb mode:
Linearity: ±1 ppb or ±0.8% F.S., whichever is greater
Repeatability: ±1 ppb or ±0.8% F.S., whichever is greater
Accuracy: ±1 ppb or ±0.8% F.S., whichever is greater
Temperature
Linearity: ±0.3 ºC
Repeatability: ±0.1 ºC
Accuracy: ±0.3 ºC
Note: "F.S." means maximum setting value of analyzer output.

2-5. SA11 SENCOM Smart Adapter

When -S5 as 1st input is selected, the measurement uses SA11 SENCOM Smart Adapter enabling digital communication.

All Rights Reserved. Copyright © 2015, Yokogawa Electric Corporation

3. Electrical

■ Output Signal

General: One output of 4-20 mA DC
Note: Tolerance: ±0.02 mA
Bi-directional HART digital communication, superimposed on mA (4-20mA) signal

Output function:
Linear or Non-linear (21-step table)

Burn out function:
Compliant with NAMUR 43 (except ISC in HART/PH201G communication)

Without HART/PH201G:
Down: 3.6 mA
Up: 22mA
signal: 3.8 to 20.5 mA for pH/ORP, SC and DO
3.9 to 20.5 mA for ISC

With HART/PH201G:
Down: 3.6 mA for pH/ORP, SC and DO
3.9 mA for ISC
Up: 22mA
signal: 3.8 to 20.5 mA for pH/ORP, SC and DO
3.9 to 20.5 mA for ISC

■ Power Supply

Nominal 24 V DC loop powered system

One (1) Sensor module (1 input):
16 to 40V DC (analog sensor of pH/ORP, SC and DO)
17 to 40V DC (for ISC)
21 to 40V DC (SA11 SENCOM Smart Adapter connected)

Two (2) Sensor modules (2 inputs):
22.8 to 40V DC (for analog sensor of pH/ORP, SC and DO)

Note: When the FLXA202 is used in the multi-drop mode of HART communication, the output signal is changed from 12.5 mA DC to 4 mA DC just after the power is turned on. Enough power supply for the instruments is to be provided.

● Maximum Load Resistance

pH/ORP (analog sensor), SC and DO:
Refer to the Figure 1.

ISC and SA11: Refer to the Figure 2.

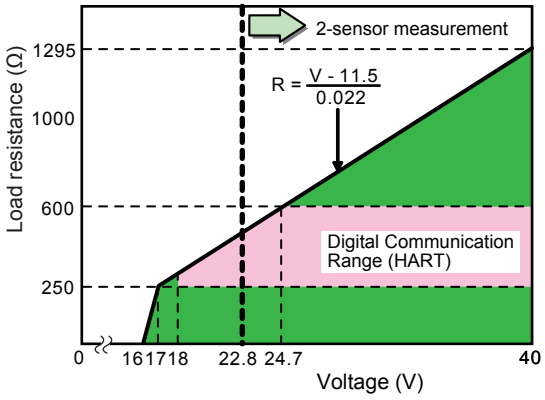

Figure 1 Supply Voltage and Load Resistance for pH/ORP, SC or DO

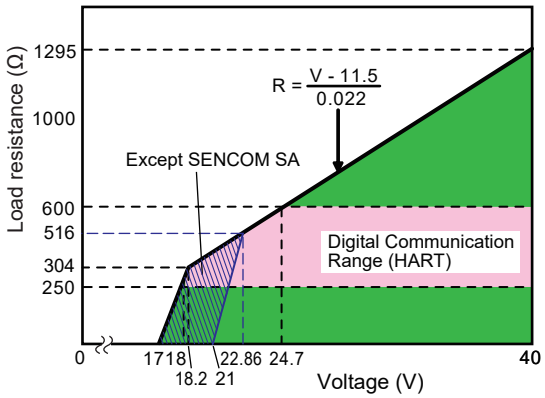

Figure 2 Supply Voltage and Load Resistance for ISC or SENCOM SA

■ Display

LCD with a touch screen:
Black/White: 213 x 160 pixels

Contrast adjustment available on the touch screen

Message language:
12 (English, Chinese, Czech, French, German, Italian, Japanese, Korean, Polish, Portuguese, Russian and Spanish)
One analyzer has all 12 languages.

Note: Description for a selection of language and language names are written in English.

Note: Only English alphabet and numeric are available for a tag number, an additional description for each value on the display screen and passwords.

Note: Only for message language on the screen, 12 languages are provided.

4. Mechanical and others

■ Housing

Case, Cover:
• Aluminum alloy cast + epoxy coating
• Aluminum alloy cast + urethane coating
• Aluminum alloy cast + high anti-corrosion coating

Color: Silver gray

Protection: IP66 (except Canada), NEMA Type 4X (USA), CSA Type 3S/4X (Canada)

■ Cable and Terminal

Cable size:
Outer diameter:
6 to 12 mm (suitable for M20 cable gland)

Terminal screw size: M4
torque of screw up: 1.2 N•m

Wire terminal:
Pin terminal, ring terminal and spade terminal can be used for analyzer's power supply terminals and sensor terminals.

Grounding terminal:
Ring terminal should be used.

Pin terminal: pin diameter: max. 1.9 mm

Ring and spade terminal: width: max. 7.8 mm

■ Cable Entry

3 holes,
M20 cable gland x 3 pcs
Close up plug x 1 pc

Note: Cable gland and plug are delivered with an analyzer, but not assembled into the analyzer.

All Rights Reserved. Copyright © 2015, Yokogawa Electric Corporation

■ **Mounting**

Mounting hardware (option):
- Universal mounting kit (Note)
- Pipe and wall mounting hardware
- Panel mounting hardware

Note: This kit contains the pipe and wall mounting hardware and the panel mounting hardware.

Hood (option):
- Stainless steel
- Stainless steel with urethane coating
- Stainless steel with epoxy coating

■ **Stainless Steel Tag Plate**

When the additional code "/SCT" with a tag number is specified, the tag plate on which the tag number is inscribed is delivered with the analyzer.
Tag plate is hanging type.

■ **Conduit Adapter**

Using optional adapter
- G1/2 (quantity: 3)
- 1/2NPT (quantity: 3)
- M20 x 1.5 (quantity: 3)

These conduit adapters are delivered with an analyzer, but not assembled into the analyzer.

■ **Size of Housing Case**

165 x 165 x 155 mm (W x H x D) (without cable gland)

■ **Weight**

Approx. 2.5 kg

■ **Ambient Operating Temperature**

-20 to +55 ºC

■ **Storage Temperature**

-30 to +70 ºC

■ **Humidity**

10 to 90% RH at 40ºC (Non-condensing)

5. Digital Communication

■ **Kind of Digital Communication**

- HART (HART 5) or PH201G dedicated distributor

Note: Only one kind of digital communication is available for one analyzer.

■ **Output Value Parameter (HART)**

Four value parameters (measured values) are available for one digital communication.
- For 1-sensor measurement, these parameters are measured values.
- For 2-sensor measurement, refer to the next item.

■ **Digital Communication of 2-Sensor Measurement (HART)**

Even when two sensor modules are installed, only one digital communication is available for 2-sensor measurement.
Four value parameters can be selected from the followings;

Measured values of two sensors
Calculated data of 2-sensor measurement
Redundant system output

■ **Specific Contact Output with dedicated distributor, model PH201G**

The distributor, model PH201G, is designed to connect with the 2-Wire Analyzer.
This distributor supplies drive power to the analyzer and receives simultaneously 4-20 mA DC signal from the analyzer.
This signal is converted to 1-5 V DC signal in the distributor.
This distributor also receives digital signals superimposed on the 4-20 mA DC signal, and provides contact outputs

Input/Output signal:

Number of available drive/signal point: 1
Output signal: 1-5 V DC (2 points) (Note)
Load resistance: 2 kΩ or less (1-5 V DC output)
Isolation system: Loop isolation type

Note: Two output signals for one analyzer's analog output are provided. Two 1-5 V DC output signals are same.

Contact output:

Contact rating:
250 V AC, maximum 100 VA
220 V DC, maximum 50 VA

Hold contact output:
NC contact, normally energized
Contact closes when power is off or during Hold situation.

Fail contact output:
NC contact, normally energized
Contact closes when power is off or during Fail/Warning conditions.

Wash contact output:
NO contact
Contact closes during wash cycles.

■ Regulatory Compliance (FLXA202)

■ **Safety, EMC and RoHS Compliance**

Safety: UL 61010-1
UL 61010-2-030
NM EN 61010 1, NM EN 61010 2 030
GB30439 Part 1
CAN/CSA-C22.2 No.61010-1
CAN/CSA-C22.2 No.61010-2-030
EN 61010-1
EN IEC 61010-2-030

EMC: EN 61326-1 Class A,Table 2 (For use in industrial locations)
EN 61326-2-3
NM EN 61326 1, NM EN 61326 2 3
RCM: EN 61326-1 Class A,Table 2
Korea Electromagnetic Conformity Standard Class A
Russian: TR CU 020/2011

RoHS: EN IEC 63000 (Style 1.06 and later)

Installation altitude: 2000 m or less
Category based on IEC 61010: I (Note 1)
Pollution degree based on IEC 61010: 2 (Note 2)

Note 1: Installation category, called over-voltage category, specifies impulse withstand voltage. Equipment with "Category I" (ex. two wire transmitter) is used for connection to circuits in which measures are taken to limit transient over-voltages to an appropriately low level.

Note 2: Pollution degree indicates the degree of existence of solid, liquid, gas or other inclusions which may reduce dielectric strength. Degree 2 is the normal indoor environment.

Information of the WEEE Directive

This product is purposely designed to be used in a large scale fixed installations only and, therefore, is out of scope of the WEEE Directive. The WEEE Directive does not apply. The WEEE Directive is only valid in the EU.

REACH: Regulation EC 1907/2006

All Rights Reserved. Copyright © 2015, Yokogawa Electric Corporation

■ Explosion Protected Type Compliance

Item	Description	'Type' in MS code
Europe (ATEX)	[Intrinsic safety "ia"] Applicable Standard: EN IEC 60079-0, EN 60079-11 Certificate No: DEKRA 11ATEX0109X Marking/Rating: ⟨Ex⟩ II 1 G Ex ia IIC T4 Ga Ambient Temperature: -20 to 55°C Power Supply / Signals: See the control drawing. Electrical parameters: See the control drawing. Dielectric strength: 500 V a.c. r.m.s. between - Supply terminals and the earth terminal - the terminals of Measuring Modules excluding PH, SC and ISC and the earth terminal - Supply terminals and the terminals of Measuring Modules - the terminals of Measuring Module 1 and the terminals of Measuring Module 2 700 V d.c. between - the terminals of PH, SC and ISC Measuring Modules and the earth terminal Specific conditions of use: Electrostatic charges on the non-metallic or coated parts of the two wire analyzer shall be avoided. Since the enclosure of the Model FLXA202 is made of aluminium, if it is mounted in an area where the use of EPL Ga (category 1 G) equipment is required, it shall be installed such that, even in the event of rare incidents, ignition sources due to impact and friction sparks are excluded. On-site assembling: See Use's Manual IM 12A01A03-01EN. Installation and erection See the control drawing. Maintenance and Repair: Warning: A modification of the equipment would no longer comply with the construction described in the certificate documentation. Only personnel authorized by Yokogawa Electric Corporation can repair the equipment. Control Drawing: Refer to (1)	-CB
International (IECEx)	[Intrinsic safety "ia"] Applicable Standard: IEC 60079-0, IEC 60079-11 Certificate No: IECEx DEK 11.0044X Marking/Rating: Ex ia IIC T4 Ga Ambient Temperature: -20 to 55°C Power Supply / Signals: See the control drawing. Electrical parameters: See the control drawing. Dielectric strength: 500 V a.c. r.m.s. between - Supply terminals and the earth terminal - the terminals of Measuring Modules excluding PH, SC and ISC and the earth terminal - Supply terminals and the terminals of Measuring Modules - the terminals of Measuring Module 1 and the terminals of Measuring Module 2 700 V d.c. between - the terminals of PH, SC and ISC Measuring Modules and the earth terminal Specific conditions of use: Electrostatic charges on the non-metallic or coated parts of the two wire analyzer shall be avoided. Since the enclosure of the Model FLXA202 is made of aluminium, if it is mounted in an area where the use of EPL Ga (category 1 G) equipment is required, it shall be installed such that, even in the event of rare incidents, ignition sources due to impact and friction sparks are excluded. On-site assembling: See Use's Manual IM 12A01A03-01EN. Installation and erection See the control drawing. Maintenance and Repair: Warning: A modification of the equipment would no longer comply with the construction described in the certificate documentation. Only personnel authorized by Yokogawa Electric Corporation can repair the equipment. Control Drawing: Refer to (1)	

All Rights Reserved. Copyright © 2015, Yokogawa Electric Corporation

Item	Description	'Type' in MS code
United States (FM)	[Intrinsically safe / Nonincendive] Applicable Standard: FM 3600, FM3610, FM3611, FM3810, NEMA 250, ANSI/UL 60079-0, ANSI/UL 60079-11, ANSI/UL 121201, ANSI/UL 61010-1, ANSI/UL 61010-2-030 Certificate No: FM200S0046X Marking/Rating: IS CL I DIV 1 GP ABCD T4, CL I ZN 0 AEx ia IIC T4 NI CL I DIV 2 GP ABCD T4, CL I ZN 2 IIC T4 T4: for ambient temperature: -20 to 55°C Enclosure: Type 4X Power Supply / Signals: See the control drawing Battery: No replaceable battery Electrical parameters: See the control drawing Dielectric strength: 500 V AC, r.m.s. between - Supply terminals and the earth terminal - the terminals of Measuring Modules excluding PH, SC and ISC and the earth terminal - Supply terminals and the terminals of Measuring Modules - the terminals of Measuring Module 1 and the terminals of Measuring Module 2 700 V DC between - the terminals of PH, SC and ISC Measuring Modules and the earth terminal Specific conditions of use: See the control drawings. On-site assembling: See Use's Manual IM 12A01A03-01EN. Installation and erection See the control drawing. Maintenance and Repair: Warning: A modification of the equipment would no longer comply with the construction described in the certificate documentation. Only personnel authorized by Yokogawa Electric Corporation can repair the equipment. Control Drawing: Refer to (3)	-CD
Canada (FM)	[Intrinsically safe / Nonincendive] Applicable Standard: CAN/CSA-C22.2 No.94.2, CAN/CSA-C22.2 No.213, CSA-C22.2 No.60079-0, CAN/CSA-C22.2 No.60079-11, CAN/CSA-C22.2 No.61010-1, CAN/CSA-C22.2 No.61010-2-030 Certificate No: FM23CA0014X Marking/Rating: Ex ia IIC T4 Ga Intrinsically safe for Class I, Division 1, Groups A, B, C, D, T4 Nonincendive for Class I, Division 2, Groups A, B, C, D, T4 Ambient Temperature: -20 to 55°C Ambient Humidity: 0 – 100% (No Condensation) Enclosure: Type 4X Power Supply / Signals: See the control drawing. Electrical parameters: See the control drawing. Dielectric strength: 500 V AC, r.m.s. between - Supply terminals and the earth terminal - the terminals of Measuring Modules excluding PH, SC and ISC and the earth terminal - Supply terminals and the terminals of Measuring Modules - the terminals of Measuring Module 1 and the terminals of Measuring Module 2 700 V DC between - the terminals of PH, SC and ISC Measuring Modules and the earth terminal Specific conditions of use: See the control drawings. On-site assembling: See Use's Manual IM 12A01A03-01EN. Installation and erection See the control drawing. Maintenance and Repair: Warning: A modification of the equipment would no longer comply with the construction described in the certificate documentation. Only personnel authorized by Yokogawa Electric Corporation can repair the equipment. Control Drawing: Refer to (2)	

All Rights Reserved. Copyright © 2015, Yokogawa Electric Corporation

Item	Description	'Type' in MS code
United States (FM)	[Nonincendive] Applicable Standard: FM 3600, FM3611, FM3810, NEMA 250, ANSI/UL 121201, ANSI/UL 61010-1, ANSI/UL 61010-2-030 Certificate No: FM20US0046X Marking/Rating: NI CL I DIV 2 GP ABCD T4, CL I ZN 2 IIC T4 T4: for ambient temperature: -20 to 55°C Enclosure: Type 4X Power Supply / Signals: See the control drawing. Battery: No replaceable battery Electrical parameters: See the control drawing. Dielectric strength: 500 V AC, r.m.s. between - Supply terminals and the earth terminal - the terminals of Measuring Modules excluding PH, SC and ISC and the earth terminal - Supply terminals and the terminals of Measuring Modules - the terminals of Measuring Module 1 and the terminals of Measuring Module 2 700 V DC between - the terminals of PH, SC and ISC Measuring Modules and the earth terminal Specific conditions of use: See the control drawings. On-site assembling: See Use's Manual IM 12A01A03-01EN. Installation and erection See the control drawing. Maintenance and Repair: Warning: A modification of the equipment would no longer comply with the construction described in the certificate documentation. Only personnel authorized by Yokogawa Electric Corporation can repair the equipment. Control Drawing: Refer to (3)	-DD
Canada (FM)	Applicable Standard: CAN/CSA-C22.2 No.94.2, CAN/CSA-C22.2 No.213, CAN/CSA-C22.2 No.61010-1, CAN/CSA-C22.2 No.61010-2-030 Certificate No: FM23CA0014X Marking/Rating: Nonincendive for Class I, Division 2, Groups A, B, C, D, T4 Ambient Temperature: -20 to 55°C Ambient Humidity: 0 – 100% (No Condensation) Enclosure: Type 4X Power Supply / Signals: See the control drawing. Electrical parameters: See the control drawing. Dielectric strength: 500 V AC, r.m.s. between - Supply terminals and the earth terminal - the terminals of Measuring Modules excluding PH, SC and ISC and the earth terminal - Supply terminals and the terminals of Measuring Modules - the terminals of Measuring Module 1 and the terminals of Measuring Module 2 700 V DC between - the terminals of PH, SC and ISC Measuring Modules and the earth terminal Specific conditions of use: See the control drawings. On-site assembling: See Use's Manual IM 12A01A03-01EN. Installation and erection See the control drawing. Maintenance and Repair: Warning: A modification of the equipment would no longer comply with the construction described in the certificate documentation. Only personnel authorized by Yokogawa Electric Corporation can repair the equipment. Control Drawing: Refer to (2)	

All Rights Reserved. Copyright © 2015, Yokogawa Electric Corporation

Item	Description	'Type' in MS code
Europe (ATEX)	[Increased Safety 'ec'] Certificate: Not Applicable as per Annex VIII to ATEX 2014/34/EU Applicable Standard: EN IEC 60079-0, EN 60079-11, EN IEC 60079-7 Marking/Rating: ⟨Ex⟩ II 3 G Ex ec ic IIC T4 Gc Ambient Temperature: -20 to 55°C Enclosure: IP66 Cable entry: See the control drawing. Pollution degree: Pollution degree 2 shall be maintained inside the enclosure. See the control drawing. Overvoltage category: I Power Supply / Signals: See the control drawing. Electrical parameters: See the control drawing. Dielectric strength: 500 VAC, r.m.s. between - Supply terminals and the earth terminal - the terminals of Measuring Modules excluding PH, SC and ISC and the earth terminal - Supply terminals and the terminals of Measuring Modules - the terminals of Measuring Module 1 and the terminals of Measuring Module 2 700 V DC between - the terminals of PH, SC and ISC Measuring Modules and the earth terminal Specific conditions of use: Electrostatic charges on the non-metallic or coated parts of the two wire analyzer shall be avoided. Since the enclosure of the Model FLXA202 is made of aluminium, if it is mounted in an area where the use of EPL Ga (category 1 G) equipment is required, it shall be installed such that, even in the event of rare incidents, ignition sources due to impact and friction sparks are excluded. On-site assembling: See Use's Manual IM 12A01A03-01EN. Installation and erection See the control drawing. Maintenance and Repair: Warning: A modification of the equipment would no longer comply with the construction described in the certificate documentation. Only personnel authorized by Yokogawa Electric Corporation can repair the equipment. Control Drawing: Refer to (4)	
International (IECEx)	[Increased Safety 'ec'] Applicable Standard: IEC 60079-0, IEC 60079-11, IEC 60079-7 Certificate No: IECEx DEK 16.0034X Marking/Rating: Ex ec ic IIC T4 Gc Ambient Temperature: -20 to 55°C Enclosure: IP66 Cable entry: See the control drawing. Pollution degree: Pollution degree 2 shall be maintained inside the enclosure. See the control drawing. Overvoltage category: I Power Supply / Signals: See the control drawing. Electrical parameters: See the control drawing. Dielectric strength: 500 VAC, r.m.s. between - Supply terminals and the earth terminal - the terminals of Measuring Modules excluding PH, SC and ISC and the earth terminal - Supply terminals and the terminals of Measuring Modules - the terminals of Measuring Module 1 and the terminals of Measuring Module 2 700 V DC between - the terminals of PH, SC and ISC Measuring Modules and the earth terminal Specific conditions of use: Electrostatic charges on the non-metallic or coated parts of the two wire analyzer shall be avoided. Since the enclosure of the Model FLXA202 is made of aluminium, if it is mounted in an area where the use of EPL Ga (category 1 G) equipment is required, it shall be installed such that, even in the event of rare incidents, ignition sources due to impact and friction sparks are excluded. The analyzer shall be installed such, that it is used in an area of not more than pollution degree 2 as defined in IEC 60664-1. On-site assembling: See Use's Manual IM 12A01A03-01EN. Installation and erection See the control drawing. Maintenance and Repair: Warning: A modification of the equipment would no longer comply with the construction described in the certificate documentation. Only personnel authorized by Yokogawa Electric Corporation can repair the equipment. Control Drawing: Refer to (5)	-DB

All Rights Reserved. Copyright © 2015, Yokogawa Electric Corporation

Item	Description	'Type' in MS code
China (NEPSI)	[Intrinsic safety "ia"] Applicable Standard: GB/T 3836.1-2021, GB/T 3836.4-2021 Certificate No: GYJ22.3555X Marking/Rating: Ex ia IIC T4 Ga Ambient Temperature: -20 to 55°C Control Drawing: Refer to (6)	-CH
Korea (KCs)	[Intrinsic safety "ia"] Applicable Standard: Notice of Ministry of Labor No. 2021-22 Certificate No: '1st input' in MS code -P1, -C1, -C5, -D1 : 21-KA4BO-0915X '1st input' in MS code -S5: 21-KA4BO-0917X Marking/Rating: Ex ia IIC T4 Ga Ambient Temperature: -20 to 55°C Control Drawing: Refer to (6)	-CG

■ Control Drawings

(1) ATEX and IECEx Intrinsic safety "ia"

Yokogawa Electric Corporation		Model		FLXA21 / FLXA202
Title	Control drawing (for 4–20mA type)			
No.	IKE039-A31	Page	1	Revision 0 Date 2019-10-18

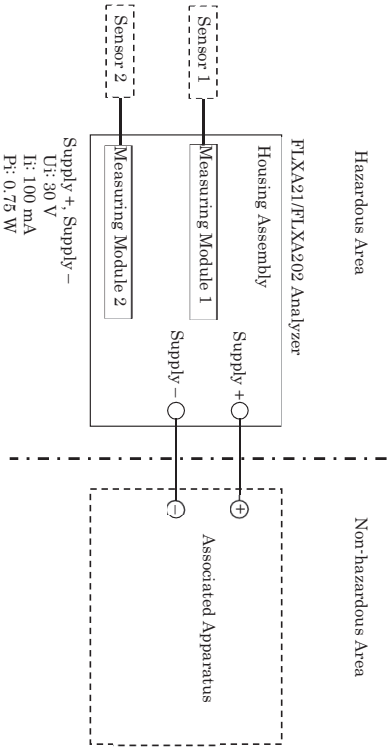

Measuring Module 1, 2

	Type of Measuring Module		
	pH, SC, DO	ISC	SENCOM, SSA
U_o	11.76 V	11.76 V	5.36 V
I_o	116.5 mA	60.6 mA	106.16 mA
P_o	0.3424 W	0.178 W	0.1423 W
C_o	100 nF	100 nF	31 µF
L_o	1.7 mH	8 mH	0.45 mH

Notes:

1. The associated apparatus must be a linear source.
2. "Measuring Module 2" is not always installed.
3. ISC module, SENCOM module and SSA module are not installed as "Measuring Module 2".
4. Sensor 1 and Sensor 2 may be simple apparatus or intrinsically safe apparatus.
5. In case of SSA module, Sensor 1 is SENCOM SA (SENCOM Smart Adaptor).
6. When accessing the display window or other non-metallic parts of the enclosure of FLXA202/FLXA21, take the following measures to minimize the risk of explosion from electrostatic discharges, in addition to avoiding any actions that cause the generation of electrostatic charges, such as rubbing with a dry cloth.

To avoid electrostatic charge on the operator,

- Earth the operator through a wrist-strap, or
- Operate FLXA202/FLXA21 on the conductive floors, wearing anti-static work clothes and electrostatic safety shoes, or
- Neutralize the operator and FLXA202/FLXA21 by a static elimination bar which has a metal part earthed through resistor from 100kΩ to 100MΩ.

In case that those measures cannot be taken or static electricity cannot be suppressed, bring a gas detector and make sure there is no ignition capable atmosphere around FLXA202/FLXA21 before the operation.

DEKRA Certification B.V.
Meander 1051, 6825 MJ Arnhem

All Rights Reserved. Copyright © 2015, Yokogawa Electric Corporation

Yokogawa Electric Corporation		Model		FLXA21 / FLXA202			
Title	Control drawing (4–20 mA type)						
No.	IFM039-A71	Page	1	Revision	10	Date	2022-08-08

Installation for Division 1 / Zone 0, 1

Applicable models: FLXA21-D-x-x-CD-xx-xx-A-..., FLXA202-D-x-x-CD-xx-xx-A-...

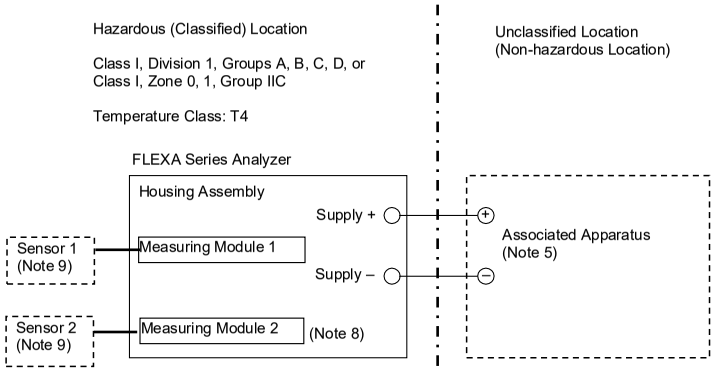

Supply +, Supply – (Note 5):
Ui: 30 V
Ii: 100 mA
Pi: 0.75 W
Ci: 13 nF
Li: 0 mH

Measuring Module 1, 2 (Note 9):

	Type of Measuring Module		
	pH, SC, DO	ISC	SENCOM, SSA
Uo	11.76 V	11.76 V	5.36 V
Io	116.5 mA	60.6 mA	106.16 mA
Po	0.3424 W	0.178 W	0.1423 W
Co	100 nF	100 nF	31 µF
Lo	1.7 mH	8 mH	0.45 mH

Specific conditions of use:
- Precautions shall be taken to minimize the risk of non-metallic parts and painted parts of the enclosure. When the equipment is used in hazardous locations, avoid any action which generates electrostatic discharge such as rubbing with a dry cloth.
- In the case where the enclosure of the analyzer is made of Aluminum, if it is mounted in ZONE 0, it must be installed such that, even in the event of rare incidents, ignition sources due to impact and friction sparks are excluded.

Yokogawa Electric Corporation		Model		FLXA21 / FLXA202			
Title	Control drawing (4–20 mA type)						
No.	IFM039-A71	Page	2	Revision	10		

Installation for Division 2 / Zone 2

Applicable models: FLXA21-D-x-x-CD-xx-xx-A-..., FLXA21-D-x-x-DD-xx-xx-A-...;
FLXA202-D-x-x-CD-xx-xx-A-..., FLXA202-D-x-x-DD-xx-xx-A-...

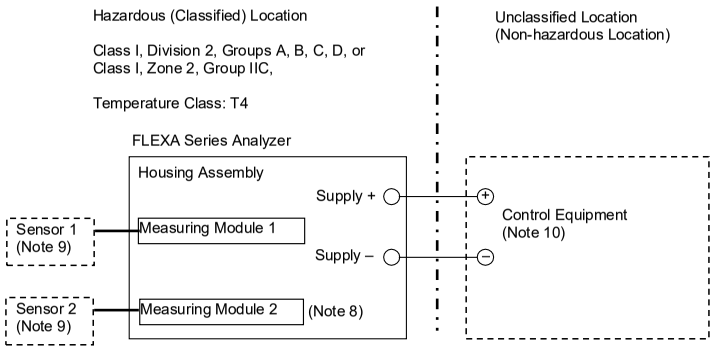

Supply +, Supply – (Note 9):
Ui: 30 V
Ci: 13 nF
Li: 0 mH

Measuring Module 1, 2 (Note 9):

	Type of Measuring Module		
	pH, SC, DO	ISC	SENCOM, SSA
Uo	11.76 V	11.76 V	5.36 V
Io	116.5 mA	60.6 mA	106.16 mA
Po	0.3424 W	0.178 W	0.1423 W
Co	4 µF	4 µF	31 µF
Lo	4.5 mH	19 mH	0.45 mH

Specific condition of use:
- Precautions shall be taken to minimize the risk of non-metallic parts and painted parts of the enclosure. When the equipment is used in hazardous locations, avoid any action which generates electrostatic discharge such as rubbing with a dry cloth.

All Rights Reserved. Copyright © 2015, Yokogawa Electric Corporation

Yokogawa Electric Corporation		Model		FLXA21 / FLXA202	
Title	Control drawing (4–20 mA type)				
No.	IFM039-A71	Page	3	Revision	10

Notes:
1. This drawing replaces the former control drawing IKE039-A12.
2. No revision to this drawing without prior approval of FM.
3. In US, the associated apparatus and the associated nonincendive field wiring apparatus must be FM-approved.
4. In US, installation must be in accordance with the National Electric Code (NFPA 70), ANSI/ISA-RP12.06.01 and relevant local codes.
   In Canada, installation must be in accordance with the Canadian Electric Code Part I (C22.1), ANSI/ISA-RP12.06.01 and relevant local codes.
5. The associated apparatus must be a linear source meeting the following conditions.

   Uo (or Voc) ≤ Ui
   Io (or Isc) ≤ Ii
   Po ≤ Pi
   Co (or Ca) ≥ Ci + Ccable
   Lo (or La) ≥ Li + Lcable

6. Control equipment connected to the associated apparatus must not use or generate a voltage which exceeds Um of the associated apparatus.
7. The control drawing of the associated apparatus must be followed when installing the equipment.
8. Measuring Module 2 is not always installed.
9. ISC module, SENCOM module and SSA module are not installed as “Measuring Module 2”.
10. When installed in Division 1, Zone 0 or Zone 1, Sensor 1 and Sensor 2 may be simple apparatus or intrinsically safe apparatus meeting the conditions below.
    When installed in Division 2 or Zone 2, Sensor 1 and Sensor 2 may be simple apparatus or nonincendive field wiring apparatus meeting the conditions below, or alternatively, they may be equipment suitable for Division 2 or Zone 2 respectively, if a suitable wiring method other than nonincendive field wiring is employed.

    Ui (or Vmax) ≥ Uo
    Ii (or Imax) ≥ Io
    Pi ≥ Po
    Ci ≤ Co – Ccable
    Li ≤ Lo – Lcable

11. The control equipment must be the associated nonincendive field wiring apparatus meeting the conditions below. Alternatively, it may be general-purpose equipment, if a suitable wiring method other than nonincendive filed wiring is employed.

    Uo (or Voc) ≤ Ui
    Co (or Ca) ≥ Ci + Ccable
    Lo (or La) ≥ Li + Lcable

Yokogawa Electric Corporation		Model		FLXA21 / FLXA202	
Title	Control drawing (4–20 mA type)				
No.	IFM039-A71	Page	4	Revision	10

12. WARNING – POTENTIAL ELECTROSTATIC CHARGING HAZARD – WHEN THE EQUIPMENT IS USED IN HAZARDOUS LOCATIONS, AVOID ANY ACTION WHICH GENERATE ELECTROSTATIC DISCHARGE SUCH AS RUBBING WITH A DRY CLOTH.
    AVERTISSEMENT – DANGER POTENTIEL DE CHARGES ÉLECTROSTATIQUES.

13. WARNING – IN THE CASE WHERE THE ENCLOSURE OF THE ANALYZER IS MADE OF ALUMINUM, IF IT IS MOUNTED IN ZONE 0, IT MUST BE INSTALLED SUCH THAT, EVEN IN THE EVENT OF RARE INCIDENTS, IGNITION SOURCES DUE TO IMPACT AND FRICTION SPARKS ARE EXCLUDED
    AVERTISSEMENT - DANS LE CAS OÙ LE BOÎTIER DE L'ANALYSEUR EST EN ALUMINIUM, S'IL EST MONTÉ EN ZONE 0, IL DOIT ÊTRE INSTALLÉ DE MANIÈRE À CE QUE, MÊME EN CAS D'INCIDENTS RARES, LES SOURCES D'INFLAMMATION DUES AUX CHOCS ET AUX ÉTINCELLES DE FRICTION SOIENT EXCLUES.

14. WARNING – SUBSTITUTION OF COMPONENTS MAY IMPAIR INTRINSIC SAFETY
    AVERTISSEMENT – LA SUBSTITUTION DE COMPOSANTS PEUT COMPROMETTRE LA SÉCURITÉ INTRINSÉQUE.

15. WARNING – SUBSTITUTION OF COMPONENTS MAY IMPAIR INTRINSIC SAFETY AND SUITABITLITY FOR DIVISION 2 / ZONE 2.
    AVERTISSEMENT – LA SUBSTITUTION DE COMPOSANTS PEUT COMPROMETTRE LA SÉCURITÉ INTRINSÉQUE.

All Rights Reserved. Copyright © 2015, Yokogawa Electric Corporation

Yokogawa Electric Corporation		Model		FLXA202			
Title	Control drawing						
No.	NKE053-A71	Page	1	Revision	4	Date	2023-10-23

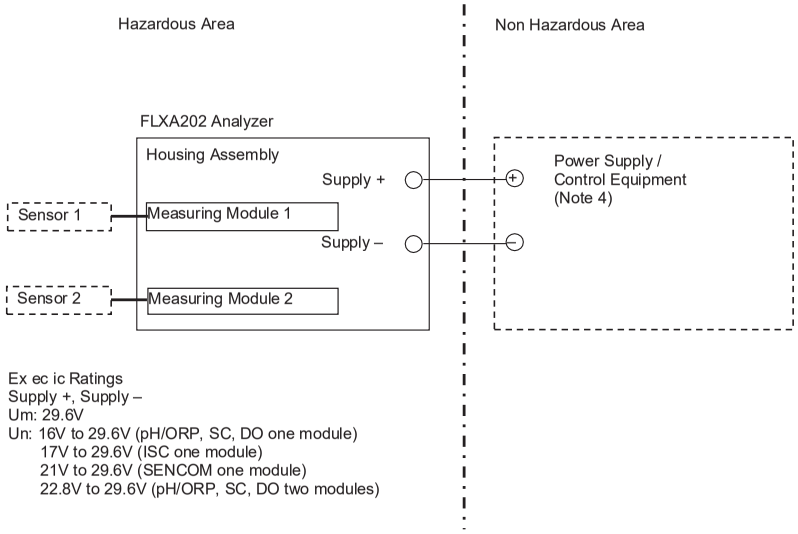

Ex ec ic Ratings
Supply +, Supply –
Um: 29.6V
Un: 16V to 29.6V (pH/ORP, SC, DO one module)
17V to 29.6V (ISC one module)
21V to 29.6V (SENCOM one module)
22.8V to 29.6V (pH/ORP, SC, DO two modules)

Measuring Module 1, 2 (Note 3)

	Type of Measuring Module		
	pH, SC, DO	ISC	SENCOM, SSA
Uo	11.76 V	11.76 V	5.36 V
Io	116.5 mA	60.6 mA	106.16 mA
Po	0.3424 W	0.178 W	0.1423 W
Co	100 nF	100 nF	31 µF
Lo	1.7 mH	8 mH	0.45 mH

Specific condition of use
- Electrostatic charges on the non-metallic or coated parts of the two wire analyzer shall be avoided.
- The cable gland accompanying the equipment may not provide sufficient clamping. Additional clamping of the cable shall be provided to ensure that pulling and twisting are not transmitted to the termination. Alternatively, an Ex d, Ex e, or Ex n cable gland which provides sufficient clamping shall be used instead of the accompanying cable gland.
- Analyzer must be installed in such a way that the air vent is physically protected from any possible impact.

Yokogawa Electric Corporation		Model		FLXA202			
Title	Control drawing						
No.	NKE053-A71	Page	2	Revision	4		

Notes:
1. Installation must be in accordance with EN 60079-14 and relevant local codes.
2. Measuring Module 2 is not always installed. ISC module, SENCOM module and SSA module are not installed as "Measuring Module 2".
3. When installed in an area where the use of Category 3 G equipment is required, Sensor 1 and Sensor 2 may be simple apparatus, intrinsically safe apparatus meeting conditions below, or other Category 3 G equipment.

   Ui (or Vmax) ≥ Uo
   Ii (or Imax) ≥ Io
   Pi ≥ Po
   Ci ≤ Co – Ccable
   Li ≤ Lo – Lcable
4. FLXA202 Analyzer must be installed in accordance with one of the following:

   a) in a SELV or PELV system, or
   b) via a safety isolating transformer complying with the requirements of IEC 61558-2-6, or a technically equivalent standard, or
   c) directly connected to apparatus complying with IEC60950 series, IEC61010-1, or a technically equivalent standard, or
   d) fed directly from cells or batteries.
5. When FLXA202 Analyzer is installed with accompanying cable glands, cable with an external diameter of 6 mm to 12 mm must be used for field wiring. The cable glands must be secured with a tightening torque of 6 Nm so that they can be released only with the aid of a tool. Unused cable gland shall be sealed with the accompanying metal plug.
6. The gaskets of the cable glands shall be protected from light.

All Rights Reserved. Copyright © 2015, Yokogawa Electric Corporation

(4) ec for IECEx Increased Safety ‘ec’

Yokogawa Electric Corporation		Model	FLXA202	
Title	Control Drawing			
No.	NIE015-A71	Page	1	Revision 3

Measuring Module 1, 2 (Note 4)

	Type of Measuring Module		
	pH, SC, DO	ISC	SENCOM, SSA
Uo	11.76 V	11.76 V	5.36 V
Io	116.5 mA	60.6 mA	106.16 mA
Po	0.3424 W	0.178 W	0.1423 W
Co	100 nF	100 nF	31 µF
Lo	1.7 mH	8 mH	0.45 mH

Yokogawa Electric Corporation		Model	FLXA202	
Title	Control Drawing			
No.	NIE015-A71	Page	2	Revision 3

Notes:

1. Installation must be in accordance with IEC60079-14 and relevant local codes.
2. Measuring Module 2 is not always installed.
3. ISC module, SENCOM module and SSA module are not installed as "Measuring Module 2".
4. When installed in an area where EPL Gc is required, Sensor 1 and Sensor 2 may be simple apparatus, intrinsically safe apparatus meeting conditions below, or other EPL Gc equipment.

   Ui (or Vmax) ≥ Uo
   Ii (or Imax) ≥ Io
   Pi ≥ Po
   Ci ≤ Co – Ccable
   Li ≤ Lo – Lcable

5. In case of SSA module, Sensor 1 is SENCOM SA (SENCOM Smart Adaptor).
6. FLXA202 Analyzer must be installed in accordance with one of the following:
   a) in a SELV or PELV system, or
   b) via a safety isolating transformer complying with the requirements of IEC 61558-2-6, or a technically equivalent standard, or
   c) directly connected to apparatus complying with IEC60950 series, IEC61010-1, or a technically equivalent standard, or
   d) fed directly from cells or batteries.
7. When FLXA202 Analyzer is installed with accompanying cable glands, cable with an external diameter of 6 mm to 12 mm must be used for field wiring. The cable glands must be secured with a tightening torque of 6 Nm so that they can be released only with the aid of a tool. Unused cable gland shall be sealed with the accompanying metal plug.

DEKRA Certification B.V.
Meander 1051, 6825 MJ Arnhem
P.O. Box 5185, 6802 ED Arnhem
The Netherlands

DEKRA Certification B.V.
Meander 1051, 6825 MJ Arnhem
P.O. Box 5185, 6802 ED Arnhem
The Netherlands

(5) NEPSI and KCs Intrinsic safety “ia”

(Refer to (1) ATEX and IECEx Control Drawing)

All Rights Reserved. Copyright © 2015, Yokogawa Electric Corporation

■ Model & Suffix Codes

Model	Suffix code	Option code	Description
FLXA202	·····	·····	2-Wire Analyzer
Power supply	**-D**	·····	Always -D
Housing (*1)	**-B**	·····	Aluminum alloy cast + urethane coating
	-C	·····	Aluminum alloy cast + epoxy coating
	-D	·····	Aluminum alloy cast + high anti-corrosion coating
Display	**-D**	·····	Anti-glare LCD
Type (*2)	**-AB**	·····	General purpose for CE, RCM
	-AD	·····	General purpose for CSA
	-AG	·····	General purpose for KC
	-AJ	·····	General purpose
	-AQ	·····	General purpose for EAC with PA for Russia (*3)
	-AR	·····	General purpose for EAC (*4)
	-CB	·····	IS for ATEX, IECEx (*5)
	-CD	·····	IS for US, Canada (*6)
	-CF	·····	IS for Japan (*7)
	-CG	·····	IS for KCs (*8)
	-CH	·····	IS for NEPSI
	-DB	·····	Increased Safety ec for ATEX, IECEx
	-DD	·····	NI for US, Canada
1st input	**-P1**	·····	pH/ORP (*9)
	-C1	·····	Conductivity (SC) (*9)
	-C5	·····	Inductive conductivity (ISC)
	-D1	·····	Dissolved oxygen (DO)
	-S5	·····	SENCOM SA (SSA) (*10)
2nd input (*11)	**-NN**	·····	Without input
	-P1	·····	pH/ORP (*9)
	-C1	·····	Conductivity (SC) (*9)
	-D1	·····	Dissolved oxygen (DO)
Output	**-A**	·····	4-20 mA + HART
—	**-N**	·····	Always -N
Language set (*12)	**-LA**	·····	English and 11 languages
Country (*13)	**-N**	·····	Global except Japan
	-J	·····	Japan
—	**-NN**	·····	Always -NN
Option	Mounting hardware	**/UM**	Universal mounting kit (*14)
		/U	Pipe and wall mounting hardware
		/PM	Panel mounting hardware
	Hood	**/H6**	Hood, stainless steel
		/H7	Hood, stainless steel + urethane coating
		/H8	Hood, stainless steel + epoxy coating
	Tag plate	**/SCT**	Stainless steel tag plate
	Conduit adapter (*15)	**/CB4**	G1/2 x 3 pcs
		/CD4	1/2NPT x 3 pcs
		/CF4	M20 x 1.5 x 3 pcs
		/CB5	G1/2 x 3 pcs for Increased Safety ec
		/CD5	1/2NPT x 3 pcs for Increased Safety ec
		/CF5	M20 x 1.5 x 3 pcs for Increased Safety ec
	Coating	**/CFC**	Conformal Coating (*16)
	Measurement law	**/K**	With Measurement Law certificate (*17)

*1: Urethane coating is for acid resistance, and epoxy coating is for alkali resistance. For high anti-corrosion coating, both urethane coating and epoxy coating are applied.
*2: Type "-C * " is intrinsic safety (IS), Type "-DB" is Increased Safety ec of ATEX and IECEx, Type "-DD" is nonincendive (NI) of US and Canada.
*3: The sales area is limited to Russia.
*4: The sales area is limited to Belarus and Kazakhstan without any pattern approval.
*5: Product registration is done by Yokogawa Taiwan Corporation as an importer in Taiwan.
*6: Type "-CD " is intrinsic safety, but is available as nonincendive.
*7: For detailed information refer to Japanese GS 12A01A03-01JA.
*8: Korean IM is attached to FLXA202 instead of English IM.
*9: This input is to be come from an analog pH/ORP or Conductivity (SC) sensor.

All Rights Reserved. Copyright © 2015, Yokogawa Electric Corporation

*10: SA11 SENCOM Smart Adapter enables digital measurement by connecting to dedicated sensor for pH/ORP or Conductivity (SC). When SENCOM SA is selected as 1st input, one sensor can be connected. Multiple sensor connection is not available with BA11 Active Junction Box. When Type “-CF” is selected, “-S5” is not available.

*11: When a 2nd input is selected, only the same kind of the 1st input is available.
For example, when a 1st input is “-P1”, the 2nd input must be the same “-P1”.
The combination of ISC and ISC is not available.

*12: These languages are message languages on the analyzer’s display.
One analyzer has English and 11 languages.
All languages are as follows; English, Chinese, Czech, French, German, Italian, Japanese, Korean, Polish, Portuguese, Russian and Spanish.

*13: When an analyzer is used in Japan, it must meet the Japanese Measurement Law, please select the “-J”.
Only SI units must be used on the analyzer and its documents in Japan.

*14: The universal mounting kit contains the pipe and wall mounting hardware (/U) and the panel mounting hardware (/PM).

*15: “/CB5”, “/CD5”, “/CF5” are exclusively for type “-DB”. “/CB4”, “/CD4”, “/CF4” cannot be used with type “-DB”.
“/CB4”, “/CD4”, “/CF4” can be used with other types of the analyzer except for “-DB”.

*16: The types “-AB”, “-AD”, “-AG”, “-AJ”, “-AQ”, and “-AR” are combinable.
The printed circuit boards of the CPU board, power supply board, and sensor module are coated to avoid the effect of moisture. However, moisture protection performance is not always guaranteed under all operating environments and conditions.

*17: The analyzer with Japanese Measurement Law certificate is available only for the following model;
FLXA202-D-[Housing code]-D-AJ-P1-NN-A-N-LA-J-NN/[option code except /K]/K
Only one pH measurement is certified.
The output signal of 4 - 20 mA is certified. HART communication is not certified.

All Rights Reserved. Copyright © 2015, Yokogawa Electric Corporation

■ Dimensions and Mounting

Unit: mm

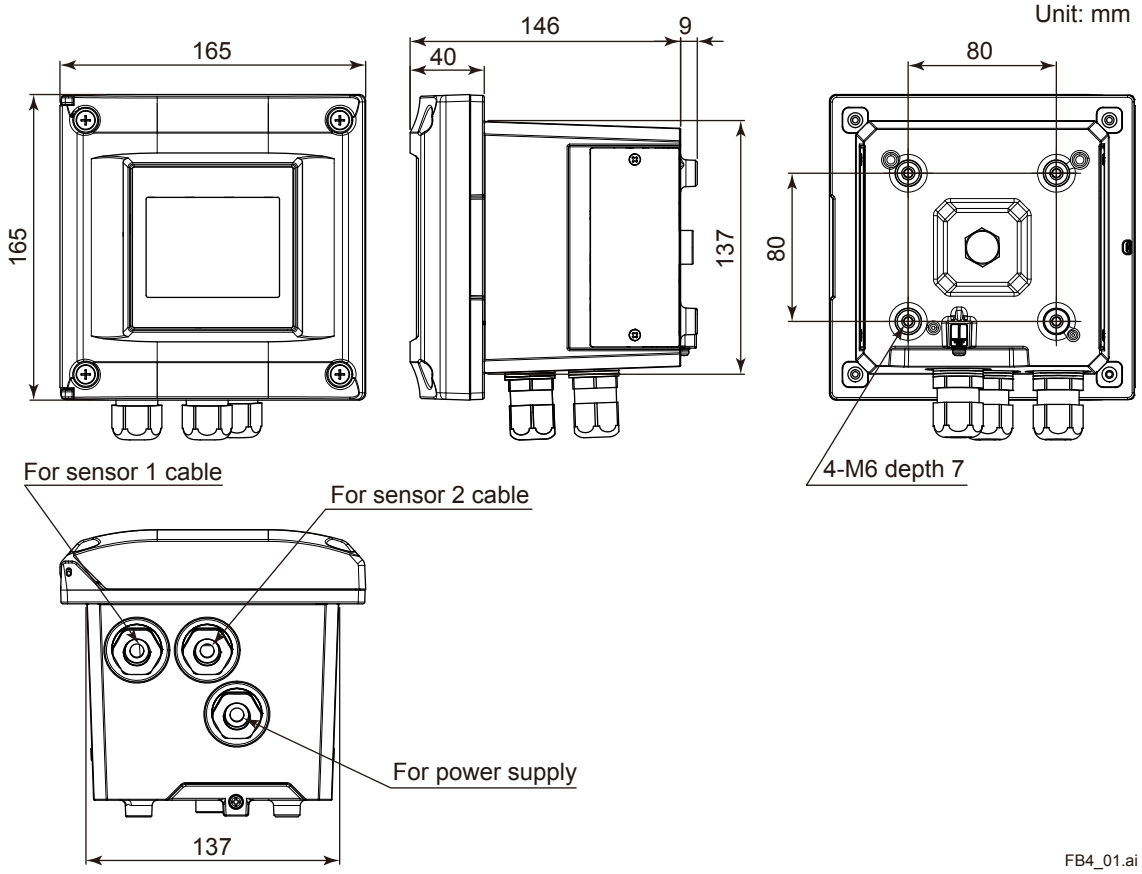

Conduit Adapter (Option code: ☐/CB4, ☐/CD4, ☐/CF4)

Unit: mm

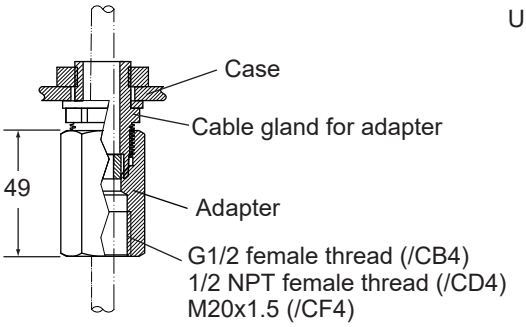

Conduit Adapter (Option code: ☐/CB5, ☐/CD5, ☐/CF5)

Unit: mm

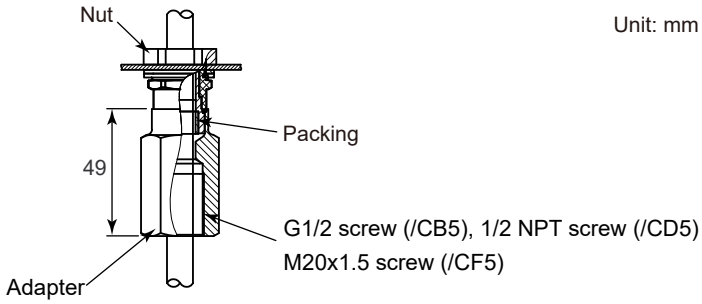

All Rights Reserved. Copyright © 2015, Yokogawa Electric Corporation

(Note) The universal mounting kit (/UM) contains the pipe and wall mounting hardware (/U) and the panel mounting hardware (/PM).

Panel mounting hardware (Option code: □/PM, □/UM)

Unit: mm

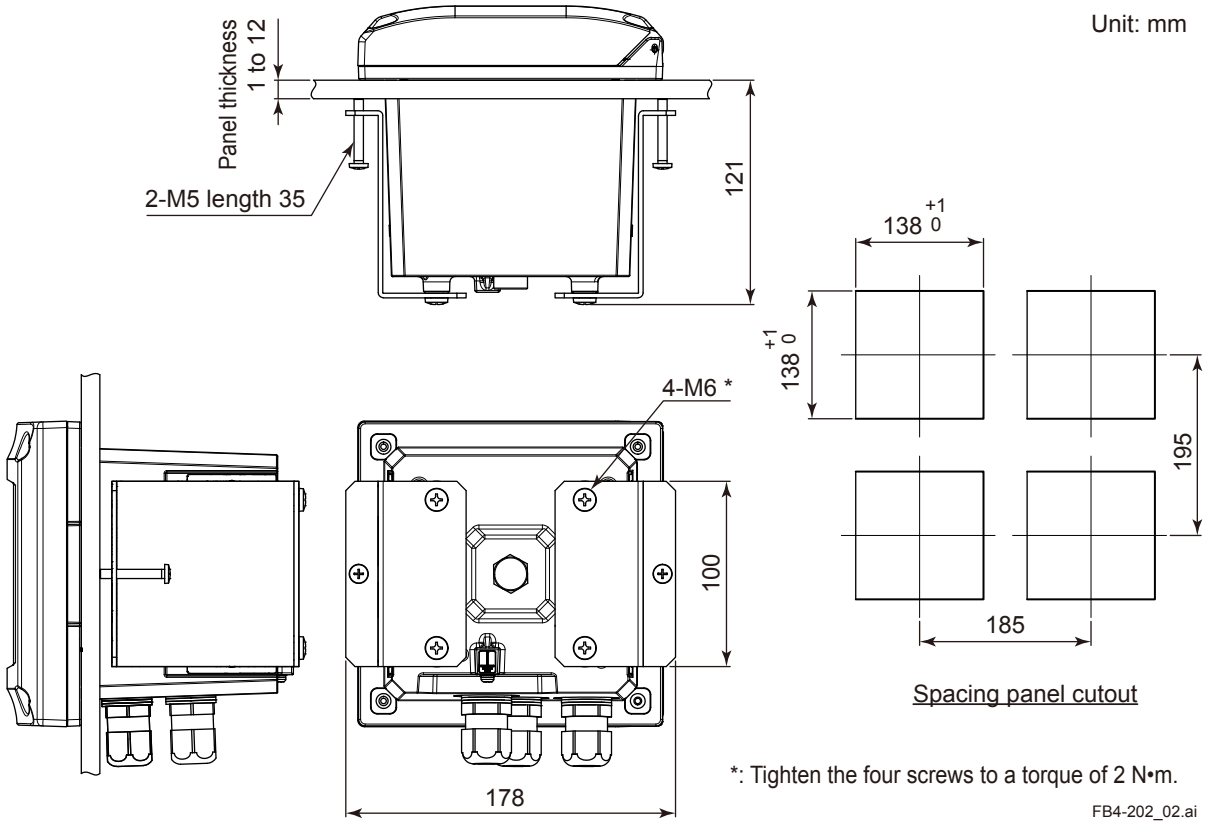

*: Tighten the four screws to a torque of 2 N•m.

FB4-202_02.ai

Wall mounting hardware (Option code: □/U, □/UM)

Unit: mm

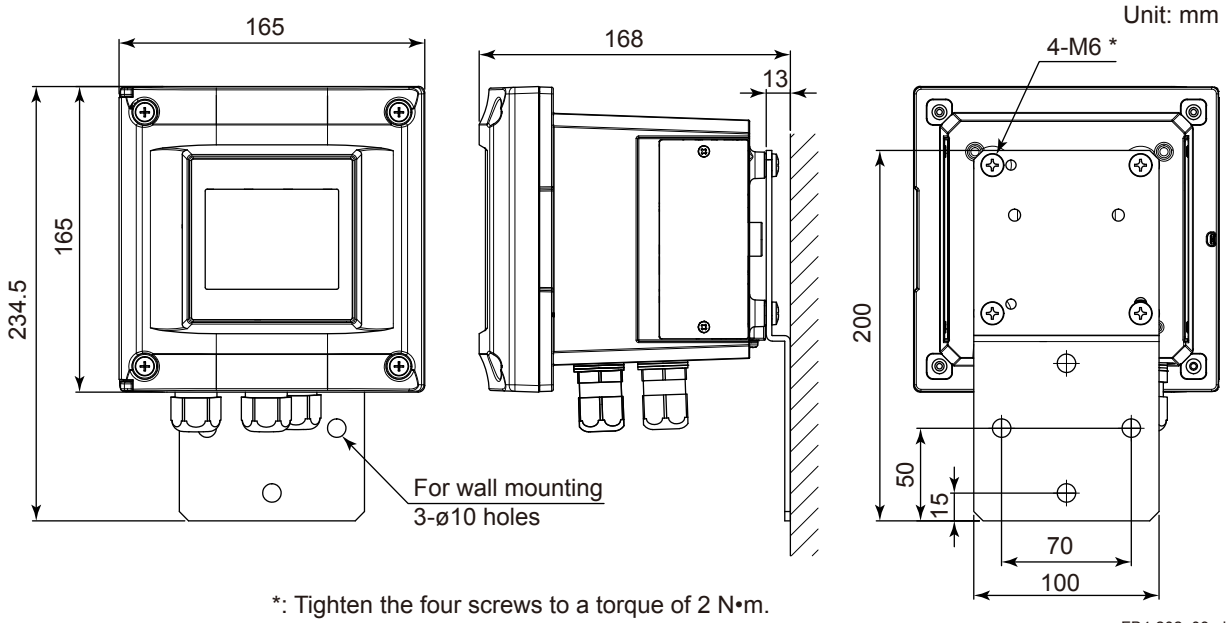

*: Tighten the four screws to a torque of 2 N•m.

FB4-202_03.ai

Note: The wall on which the analyzer is mounted should be strong enough to bear the weight of more than 8 kg.

All Rights Reserved. Copyright © 2015, Yokogawa Electric Corporation

Pipe mounting hardware (Option code: ☐/U, ☐/UM)

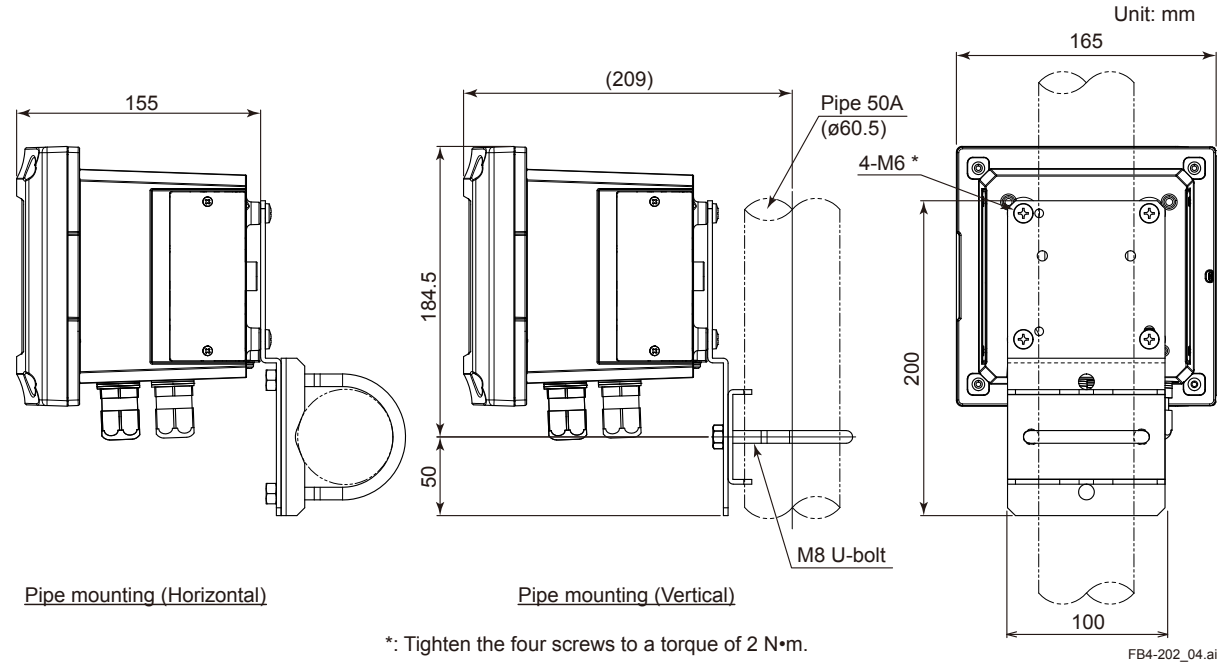

Stainless steel hood (Option code: ☐/H6, ☐/H7, ☐/H8)

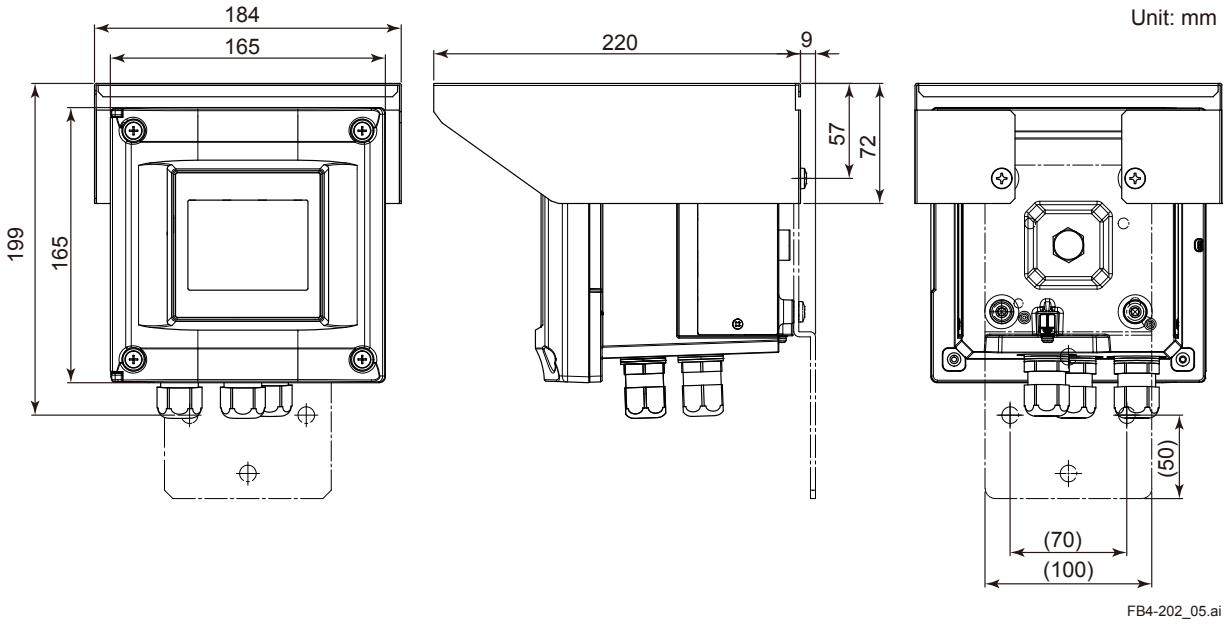

All Rights Reserved. Copyright © 2015, Yokogawa Electric Corporation

■ Wiring Diagrams

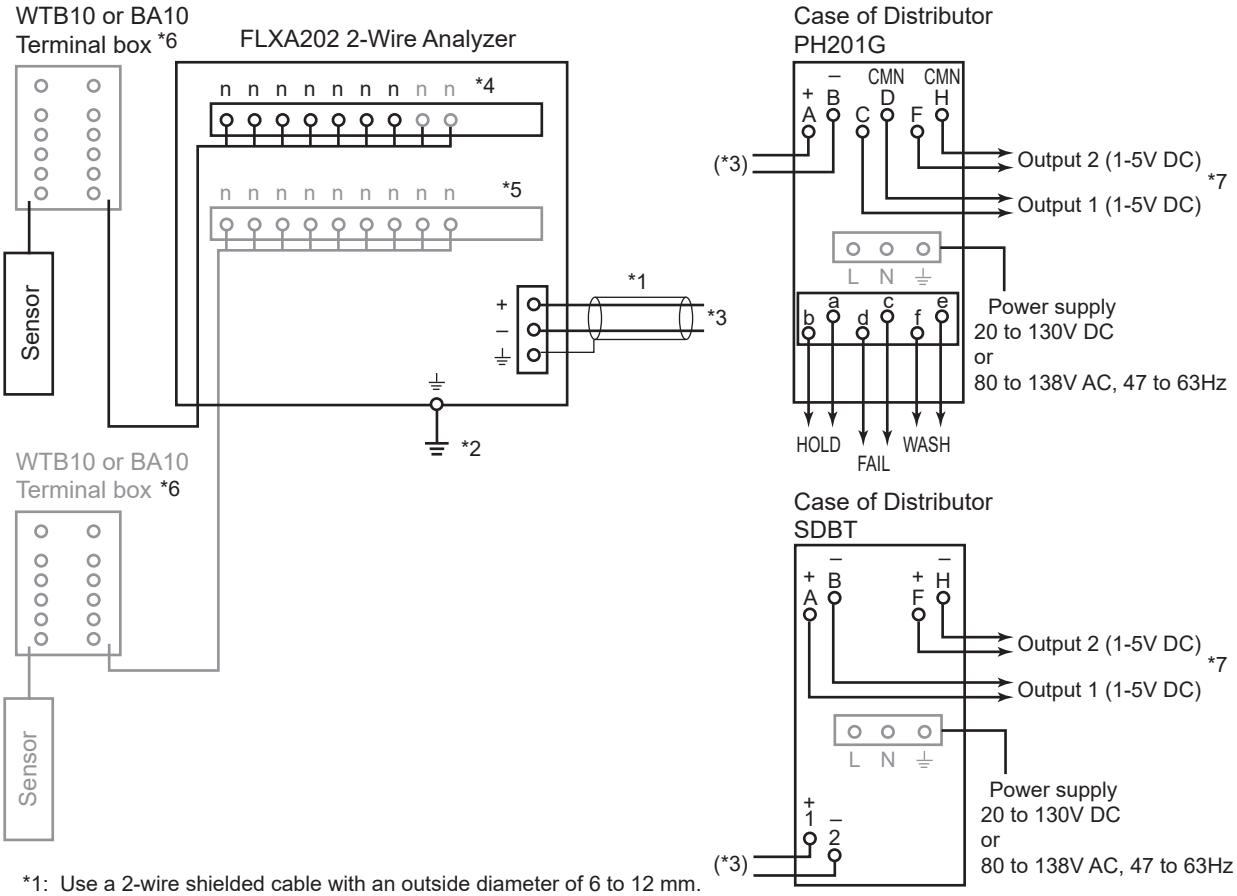

*1: Use a 2-wire shielded cable with an outside diameter of 6 to 12 mm.
*2: Connect the analyzer to ground. (Class D ground: 100 ohm or less)
*3: This line is connected to a distributor or 24V DC power supply.
*4: Terminal numbers for each sensor module are shown below.
*5: Two modules of the same kind of measurement/sensor type can be installed.
*6: The terminal box may be necessary depending on the sensor cable length and the distance between the analyzer and the sensor. The terminal box cannot be used for connection to SA11 SENCOM Smart Adaptor.
*7: Two outputs, output 1 and output 2, of PH201G or SDBT are same signals.

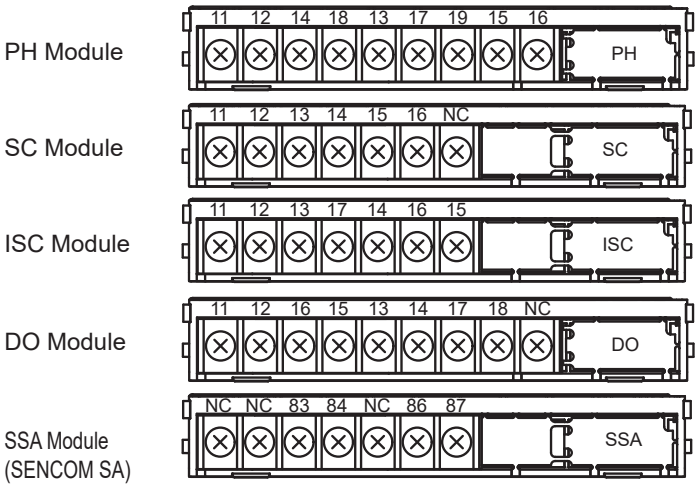

All Rights Reserved. Copyright © 2015, Yokogawa Electric Corporation

■ Distributor

The distributor PH201G designed exclusively for use with the 2-wire analyzer, supplies drive power to the 2-wire analyzer while simultaneously receiving 4 to 20 mA DC current signal from the analyzer and converting it to 1 to 5 V DC voltage signal; it also simultaneously receives a digital signal superimposed on 4 to 20 mA DC signal, and provides contact outputs during hold, failure, and/or cleaning. A current limiter function is built into the distributor so it can continue to operate properly even with a short circuit on the transmitter side.

● Standard Specifications

<Input/Output Signal Specifications>

Number of input points
(Number of transmitter units connectable): 1 point
Output signal: 1 to 5 V DC (2 points)
Load resistance: 2 kΩ or less (1 to 5 V DC Output)
Isolation system: Loop isolation type

<Mounting/Form>

Mounting method: Indoor rack mounting
Connection method:
External signal connection; M4 screw terminal connection
Power supply/Ground connection:
100 V: JIS C8303 ground type 2 plug connection
220 V: CEE 7VII (European electrical device standard) plug connection
Cable length: 300 mm
External dimensions: 180H x 48W x 300D mm
Weight: Approx. 1.7 kg (Including rack and case)

<Standard Specifications>

Accuracy: ±0.2 % of span
Analyzer supply voltage: 26.5 ± 1.5 V DC
Insulation resistance
Between I/O terminals and ground pin:
100 MΩ/500 V DC
Between power supply pins and ground pin:
100 MΩ/500 V DC

<Operating Specifications>

Ambient temperature: 0 to 50 °C
Ambient humidity: 5 to 90 % RH (Non-condensing)
Power supply: Dual use AC/DC
100 V: DC power 20 to 130 V, no polarity
AC power 80 to 138 V, 47 to 63 Hz
220 V: DC power 120 to 340 V, no polarity
AC power 138 to 264 V, 47 to 63 Hz
Maximum current and power consumption
24 V DC: Approx. 200 mA
100 V AC: Approx. 7 VA
220 V AC: Approx. 11 VA

<Contact Output>

Contact rating: 250 V AC, maximum 100 VA 220 V DC, maximum 50 VA
Hold contact output: 1 contact, Normally energized
Contact closes when power is off or during maintenance.
Failure contact output: 1 contact, Normally energized
Contact will close when power is off or during the failure.
Cleaning contact output: Close during cleaning only
Used as drive contact for solenoid valve for cleaning.

● Model and Suffix Codes

Model	Suffix Code	Option Code	Specification
PH201G	----------	----------	Distributor
Power Supply	-A1	----------	100V AC version
	-A2	----------	220V AC version
Style Code	*C	----------	Style C (for FLXA21 & FLXA202)
Option		/TB	Terminal for power connection

All Rights Reserved. Copyright © 2015, Yokogawa Electric Corporation

- **External Dimension**

Unit：mm

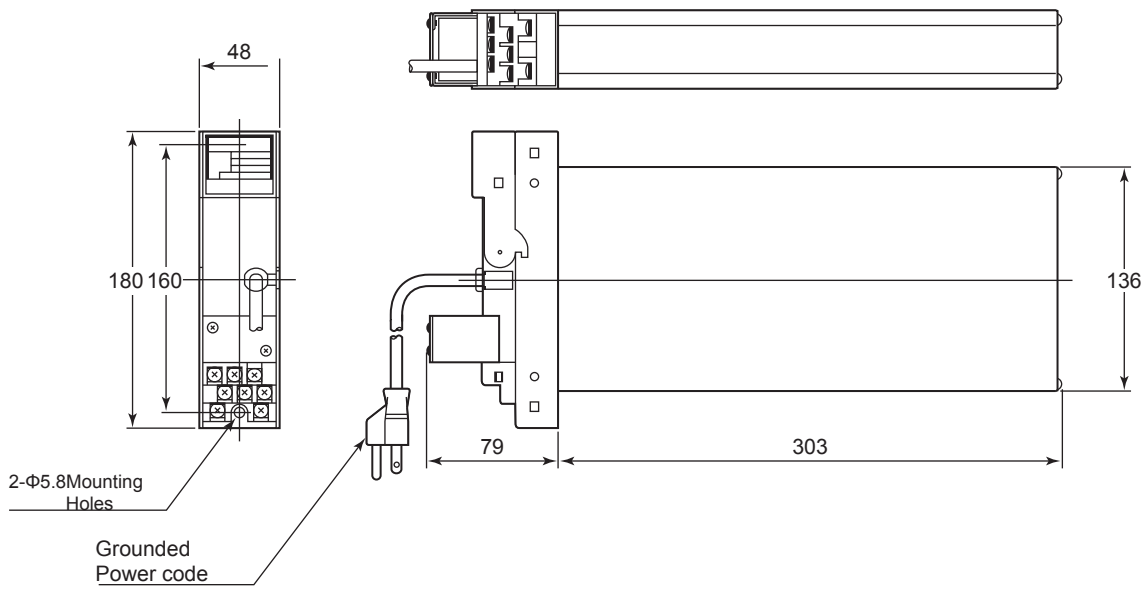

TB with power terminal

Unit：mm

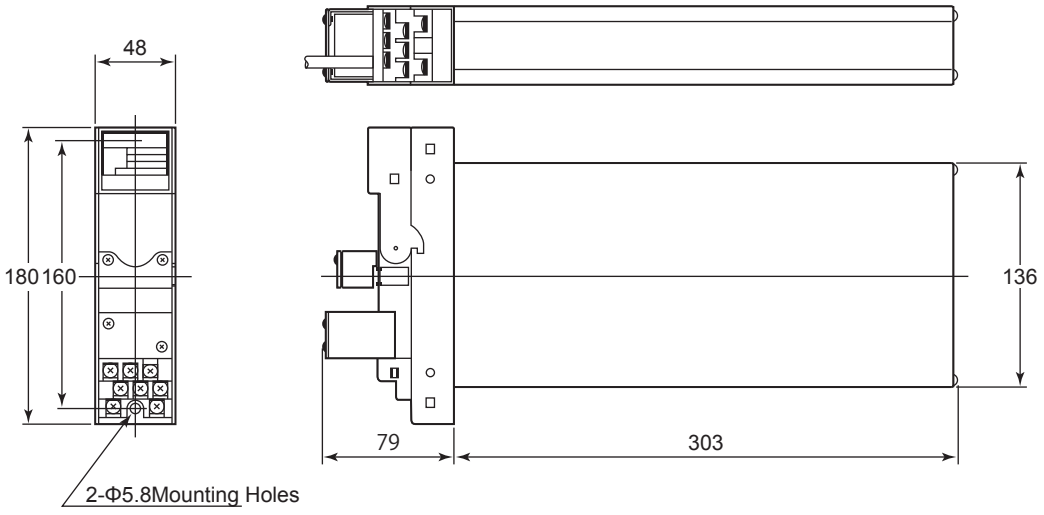

All Rights Reserved. Copyright © 2015, Yokogawa Electric Corporation

■ Inquiry Specifications Sheet for FLXA202 2-Wire Analyzer

Make inquiries by placing checkmarks (✓) in the pertinent boxes and filling in the blanks.

1. General Information

Company name _____
Contact Person; _____ Department; _____
Plant name; _____
Measurement location; _____
Purpose of use; ☐ Indication, ☐ Recording, ☐ Alarm, ☐ Control

2. Measurement Conditions

(1) Process temperature; _____to_____Normally_____[°C]
(2) Process pressure; _____to_____Normally_____[kPa]
(3) Flow rate; _____to_____Normally_____[l/min]
(4) Flow speed; _____to_____Normally_____[m/s]
(5) Slurry or contaminants; ☐ No, ☐ Yes
(6) Name of process fluid; _____
(7) Components of process fluid; _____
(8) Others;

3. Installation Site

(1) Ambient temperature; _____to_____[°C]
(2) Location; ☐ Outdoors, ☐ Indoors
(3) Others;

4. Requirements

1st Input; ☐ pH/ORP ☐ Conductivity (SC) ☐ Inductive conductivity (ISC)
☐ Dissolved oxygen (DO) ☐ SENCOM SA (SSA)
2nd Input; ☐ With (same as 1st Input) ☐ Without

4.1 pH/ORP (Analog)

☐ 1st Input

(1) Measuring range; ☐ pH 0 to 14 ☐ ORP _____to_____mV ☐ _____
(2) Transmission output; ☐ 4 to 20 mA DC ☐ pH ☐ ORP ☐ Temperature
(3) System configuration selection; ☐ Electrode, ☐ Holder, ☐ pH Converter, ☐ Cleaning system, ☐ Terminal box, ☐ Accessories
(4) Electrode cable length; ☐ 3m, ☐ 5m, ☐ 7m, ☐ 10m, ☐ 15m, ☐ 20m, ☐____m
(5) Electrode operating pressure; ☐10 kPa or less, ☐ More than 10 kPa
(6) Type of holder; ☐ Guide pipe, ☐ Submersion, ☐ Flow-through, ☐ Suspension, ☐ Angled floating ball, ☐ Vertical floating ball
(7) Cleaning method; ☐ No cleaning, ☐ Ultrasonic cleaning, ☐ Jet cleaning, ☐ Brush cleaning
(8) Sample temperature; ☐ -5 to 105°C, ☐ -5 to 100°C, ☐ -5 to 80°C
(9) Others;

☐ 2nd Input

(1) Measuring range; ☐ pH 0 to 14 ☐ ORP _____to_____mV ☐ _____
(2) Transmission output; ☐ 4 to 20 mA DC ☐ pH ☐ ORP ☐ Temperature
(3) System configuration selection; ☐ Electrode, ☐ Holder, ☐ pH Converter, ☐ Cleaning system, ☐ Terminal box, ☐ Accessories
(4) Electrode cable length; ☐ 3m, ☐ 5m, ☐ 7m, ☐ 10m, ☐ 15m, ☐ 20m, ☐____m
(5) Electrode operating pressure; ☐10 kPa or less, ☐ More than 10 kPa
(6) Type of holder; ☐ Guide pipe, ☐ Submersion, ☐ Flow-through, ☐ Suspension, ☐ Angled floating ball, ☐ Vertical floating ball
(7) Cleaning method; ☐ No cleaning, ☐ Ultrasonic cleaning, ☐ Jet cleaning, ☐ Brush cleaning
(8) Sample temperature; ☐ -5 to 105°C, ☐ -5 to 100°C, ☐ -5 to 80°C
(9) Others;

All Rights Reserved. Copyright © 2015, Yokogawa Electric Corporation

4.2 Conductivity (Analog)

☐ 1st Input

(1) Measuring range; _____

(2) Transmission output; 4 to 20 mA DC

(3) Detector/sensor; SC4AJ ☐ Two electrode system (0.02 cm^{-1}) ☐ Two electrode system (0.1 cm^{-1})
SC8SG ☐ Two electrode system (0.01 cm^{-1}) ☐ Two electrode system (10 cm^{-1}),
☐ Four electrode system (10 cm^{-1})
SC210G ☐ Two electrode system (0.05 cm^{-1}) ☐ Two electrode system (5 cm^{-1})

(4) Detector/sensor mounting method;
SC4AJ ☐ Adapter mounting, ☐ Welding socket, ☐ Welding clamp
SC8SG ☐ Screw-in, ☐ Flow-through
SC210G ☐ Screw-in, ☐ Flange, ☐ Flow-through, ☐ Screw-in with gate valve

(5) Electrode cable length; SC4AJ☐ 3m, ☐ 5m, ☐ 10m, ☐ 20m
SC8SG ☐ 5.5m, ☐ 10m, ☐ 20m
SC210G ☐ 3m, ☐ 5m, ☐ 10m, ☐ 15m, ☐ 20m

(6) Others;

☐ 2nd Input

(1) Measuring range; _____

(2) Transmission output; 4 to 20 mA DC

(3) Detector/sensor; SC4AJ ☐ Two electrode system (0.02 cm^{-1}) ☐ Two electrode system (0.1 cm^{-1})
SC8SG ☐ Two electrode system (0.01 cm^{-1}) ☐ Two electrode system (10 cm^{-1}),
☐ Four electrode system (10 cm^{-1})
SC210G ☐ Two electrode system (0.05 cm^{-1}) ☐ Two electrode system (5 cm^{-1})

(4) Detector/sensor mounting method;
SC4AJ ☐ Adapter mounting, ☐ Welding socket, ☐ Welding clamp
SC8SG ☐ Screw-in, ☐ Flow-through
SC210G ☐ Screw-in, ☐ Flange, ☐ Flow-through, ☐ Screw-in with gate valve

(5) Electrode cable length; SC4AJ☐ 3m, ☐ 5m, ☐ 10m, ☐ 20m
SC8SG ☐ 5.5m, ☐ 10m, ☐ 20m
SC210G ☐ 3m, ☐ 5m, ☐ 10m, ☐ 15m, ☐ 20m

(6) Others;

4.3 Inductive conductivity

(1) Measuring range; _____

(2) Transmission output; 4 to 20 mA DC

(3) System configuration selection; ☐ ISC40GJ Sensor, ☐ Holder, ☐ Converter, ☐ BA20 Terminal box,
☐ WF10J Extension cable

(4) Sensor mounting method; ☐ ISC40FDJ Immersion holder, ☐ ISC40FFJ Flow-through holder,
☐ ISC40FSJ Direct insertion adapter

(5) ISC40GJ Sensor cable length; ☐ 5m, ☐ 10m, ☐ 15m, ☐ 20m

(6) WF10J Extension cable length; ☐ 5m, ☐ 10m, ☐ 20m, ☐ 30m, ☐ 40m

(7) Others;

All Rights Reserved. Copyright © 2015, Yokogawa Electric Corporation

4.4 Dissolved oxygen

☐ **1st Input**

(1) Measuring range; ☐ 0 to 50 mg/L ☐ _____
(2) Transmission output; 4 to 20 mA DC
(3) System configuration selection; ☐ Electrode, ☐ Holder, ☐ Converter, ☐ Cleaning system, ☐ Terminal box, ☐ Maintenance parts set, ☐ Calibration set
(4) Electrode cable length; ☐ 3m, ☐ 5m, ☐ 10m, ☐ 15m, ☐ 20m
(5) Type of holder; ☐ Guide pipe, ☐ Submersion, ☐ Flow-through, ☐ Suspension, ☐ Angled floating ball, ☐ Vertical floating ball
(6) Cleaning method; ☐ No cleaning, ☐ Jet cleaning
(7) Others;

☐ **2nd Input**

(1) Measuring range; ☐ 0 to 50 mg/L ☐ _____
(2) Transmission output; 4 to 20 mA DC
(3) System configuration selection; ☐ Electrode, ☐ Holder, ☐ Converter, ☐ Cleaning system, ☐ Terminal box, ☐ Maintenance parts set, ☐ Calibration set
(4) Electrode cable length; ☐ 3m, ☐ 5m, ☐ 10m, ☐ 15m, ☐ 20m
(5) Type of holder; ☐ Guide pipe, ☐ Submersion, ☐ Flow-through, ☐ Suspension, ☐ Angled floating ball, ☐ Vertical floating ball
(6) Cleaning method; ☐ No cleaning, ☐ Jet cleaning
(7) Others;

4.5 pH/ORP (digital with SENCOM SA)

(1) Measuring range; ☐ pH 0 to 14 ☐ ORP _____to_____mV ☐ _____
(2) Transmission output; 4 to 20 mA DC ☐ pH ☐ Temperature
(3) System configuration selection; ☐ Electrode, ☐ Holder, ☐ pH Converter, ☐ Cleaning system, ☐ Accessories
(4) Electrode cable length; ☐ 3m, ☐ 5m, ☐ 10m, ☐ 20m, ☐ 30m
(5) Electrode operating pressure; ☐10 kPa or less, ☐ More than 10 kPa
(6) Type of holder; ☐ Submersion, ☐ Flow-through,
(7) Cleaning method; ☐ No cleaning, ☐ Jet cleaning
(8) Sample temperature; ☐ -5 to 105°C, ☐ -5 to 100°C, ☐ -5 to 80°C
(9) Others;

4.6 Conductivity (digital with SENCOM SA)

(1) Measuring range; _____
(2) Transmission output; 4 to 20 mA DC
(3) Detector/sensor; SC4AJ ☐ Two electrode system (0.02 cm^{-1}) ☐ Two electrode system (0.1 cm^{-1})
SC8SG ☐ Two electrode system (0.01 cm^{-1}), ☐ Four electrode system (10 cm^{-1})
(4) Detector/sensor mounting method;
SC4AJ ☐ Adapter mounting, ☐ Welding socket, ☐ Welding clamp
SC8SG ☐ Screw-in, ☐ Flow-through
(5) Electrode cable length; SC4AJ ☐ 3m, ☐ 5m, ☐ 10m, ☐ 20m, ☐ 30m
SC8SG ☐ 3m, ☐ 5m, ☐ 10m, ☐ 20m, ☐ 30m
(6) Others;

All Rights Reserved. Copyright © 2015, Yokogawa Electric Corporation
Subject to change without notice.