General Specifications

EJX510B and EJX530B
Absolute and Gauge Pressure Transmitters

GS 01C27F01-01EN

The high performance absolute and gauge pressure transmitters EJX510B and EJX530B feature single crystal silicon resonant sensor and are suitable to measure liquid, gas, or steam pressure. EJX510B and EJX530B transmit not only process variables but also the setting parameters using wireless signal.
In case of the battery powered type, the transmitters run on internal batteries, and the installation cost can be decreased since hard-wiring is not required. The communication is compliant with ISA100.11a protocol specifications.



■ FEATURES

- **Long Life Battery Design**
  Ultra low current consumption design using two high capacity lithium-thionyl chloride batteries provide wireless operation for years.
- **Security Assured Wireless Network Joining**
  Infrared communication between the devices for wireless network configuration and parameter setting.
- **Quick Update Time**
  Selectable from 0.5 second to 60 minutes for measured process value to publish wirelessly.

■ STANDARD SPECIFICATIONS

■ WIRELESS SPECIFICATIONS

Communication protocol: ISA100.11a protocol
Data rate: 250 kbps
Frequency: 2400 - 2483.5 MHz license free ISM band
Radio security: AES 128 bit codified
RF Transmitter power: Max. 11.6 dBm
Antenna: +2 dBi Omni directional
Separately sold remote antenna and antenna cables can be used.

■ POWER SUPPLY SPECIFICATIONS

Battery:
  Use the dedicated battery pack.
  Rated voltage: 7.2 V
  Rated capacity: 19 Ah
External Power Source:
  Rated voltage: 10.5 to 30 V DC
  Rated current: 36 mA

■ SPAN AND RANGE LIMITS

(For EJX510B, values are in absolute and lower range limits are 0.)

Measurement Span/Range		MPa	psi (/D1)	bar (/D3)	kgf/cm^2 (/D4)
A	Span	8 to 200 kPa	1.16 to 29	0.08 to 2	0.08 to 2
	Range	–100 to 200 kPa	–14.5 to 29	–1 to 2	–1 to 2
B	Span	0.02 to 2	2.9 to 290	0.2 to 20	0.2 to 20
	Range	–0.1 to 2	–14.5 to 290	–1 to 20	–1 to 20
C	Span	0.1 to 10	14.5 to 1450	1 to 100	1 to 100
	Range	–0.1 to 10	–14.5 to 1450	–1 to 100	–1 to 100
D	Span	0.5 to 50	72.5 to 7200	5 to 500	5 to 500
	Range	–0.1 to 50	–14.5 to 7200	–1 to 500	–1 to 500

T01E.ai

■ PERFORMANCE SPECIFICATIONS

Zero - based calibrated span, linear output, wetted parts material code ‘S’ and silicone oil, in the continuous measurement mode unless otherwise mentioned.

Specification Conformance
EJX series ensures specification conformance to at least ±3σ.

YOKOGAWA

Yokogawa Electric Corporation
2-9-32, Nakacho, Musashino-shi, Tokyo, 180-8750 Japan
Tel.: 81-422-52-5690 Fax.: 81-422-52-2018

GS 01C27F01-01EN
©Copyright Feb. 2009
22nd Edition Apr. 2026

Reference Accuracy of Calibrated Span
(includes the effects of terminal-based linearity, hysteresis, and repeatability)

Measurement span		A
Reference accuracy	Span ≥ X	±0.04% of Span
	Span < X	±(0.004 URL/span) % of Span
X		20 kPa (2.9 psi)
URL (Upper range limit)		200 kPa (29 psi)

Measurement span		B	C
Reference accuracy	Span ≥ X	±0.04% of Span	
	Span < X	±(0.005+0.0035 URL/span) % of Span	
X		0.2 MPa (29 psi)	1 MPa (145 psi)
URL (Upper range limit)		2 MPa (290 psi)	10 MPa (1450 psi)

Measurement span		D
Reference accuracy	Span ≥ X	±0.04% of Span
	Span < X	±(0.004 URL/span) % of Span
X		5 MPa (720 psi)
URL (Upper range limit)		50 MPa (7200 psi)

T02E.ai

Ambient Temperature Effects per 28°C (50°F) Change
±(0.15% of Span + 0.15% of URL)

Satability (All normal operating condition)
EJX530B: ±0.1% of URL for 10 years
EJX510B: ±0.2% of URL for 10 years

Vibration Effects
Less than ±0.1% of URL when tested per the requirements of IEC60770-1 field with general application or pipeline with low vibration level (10-60 Hz 0.15 mm displacement /60-500 Hz 2g)

Mounting Position Effects
Rotation in diaphragm plane has no effect. Tilting up to 90 degree will cause zero shift up to 0.21 kPa (0.84 inH_2O) which can be corrected by the zero adjustment.

Battery Characteristic
Battery pack with long life lithium-thionyl chloride batteries. With the intrinsically safe type, the battery pack is replaceable in hazardous area.
Typical battery life is 10 years at 30 seconds update time or 5 years at 10 seconds update time in the following conditions.*
- Ambient temperature: 23±2°C
- Device role: IO mode
- LCD display: off

* Environmental condition such as vibration may affect the battery life.

Response Time (All capsules)
150 ms
Including dead time of 100 ms (nominal)

■ FUNCTIONAL SPECIFICATIONS

Output
Wireless (ISA100.11a protocol) 2.4 GHz signal.

Update Time

Measurement mode	Pressure
Continuous	100 ms
Intermittent	0.5 to 3600 s selectable

If the update time is set at one second, the transmitter shifts to the continuous mode.

Zero Adjustment Limits
Zero can be fully elevated or suppressed, within the lower and upper range limits of the capsule.

External Zero Adjustment
External zero is continuously adjustable with 0.01% incremental resolution of span.

Integral Indicator (LCD display)
5-digit numerical display, 6-digit unit display and bar graph.
The indicator is configurable to display one or up to two of the following variables periodically.;
Pressure and temperature.
See also “Factory Setting.”

Burst Pressure
A, B and C capsule: 30 MPa
D capsule: 132 MPa

Self Diagnostics
Capsule failure, amplifier failure, configuration error, battery alarm, wireless communication alarm and over-range error for process variables.

Software Download Function
Software download function permits to update wireless field device software via ISA100.11a wireless communication.

Battery Pack
2x primary lithium-thionyl chloride batteries with battery case (batteries sold separately)

■ NORMAL OPERATING CONDITION

(Optional features or approval codes may affect limits.)

Ambient Temperature Limits
-40 to 85°C (-40 to 185°F)
-30 to 80°C (-22 to 176°F) LCD visible range

Process Temperature Limits
-40 to 120°C (-40 to 248°F)

Ambient Humidity Limits
0 to 100% RH

Maximum Over Pressure

Pressure		
Capsule	EJX510B	EJX530B
A and B	4 MPa abs (580 psia)	4 MPa (580 psig)
C	20 MPa abs (2900 psia)	20 MPa (2900 psig)
D	75 MPa abs (10800 psia)	75 MPa (10800 psig)

All Rights Reserved. Copyright © 2009, Yokogawa Electric Corporation

Working Pressure Limits (Silicone oil)

Maximum Pressure Limits

Pressure		
Capsule	**EJX510B**	**EJX530B**
A	200 kPa abs (29 psia)	200 kPa (29 psig)
B	2 MPa abs (290 psia)	2 MPa (290 psig)
C	10 MPa abs (1450 psia)	10 MPa (1450 psig)
D	50 MPa abs (7200 psia)	50 MPa (7200 psig)

Minimum Pressure Limit

See graph below

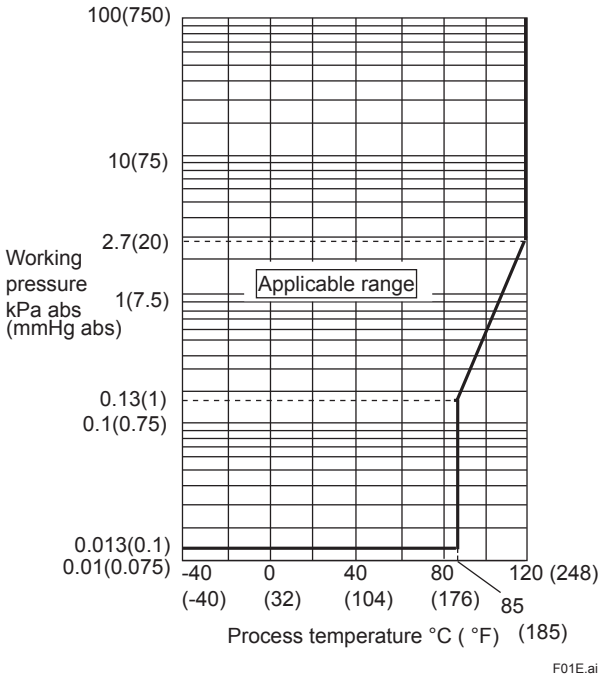

Figure 1-1. Working Pressure and Process Temperature [For EJX510B]

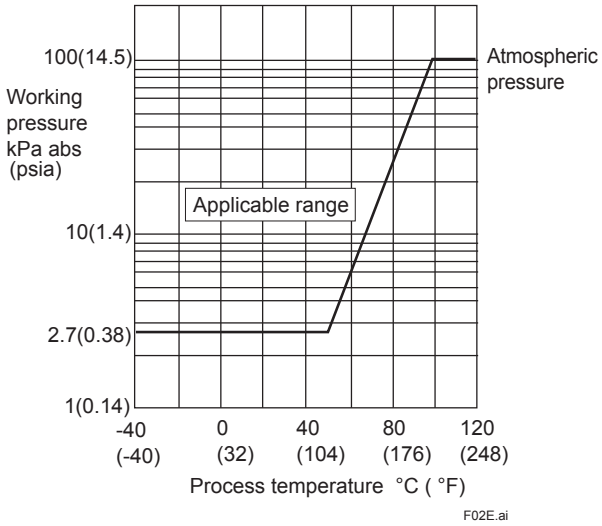

Figure 1-2. Working Pressure and Process Temperature [For EJX530B]

■ REGULATORY COMPLIANCE STATEMENTS

This device contains the wireless module which satisfies the following standards.

* Please confirm that an installation region fulfills an applicable standard. If additional regulatory information and approvals are required, contact a Yokogawa representative.

EMC Conformity Standards

EN61326-1 Class A, Table 2 (For use in industrial locations), EN61326-2-3

Radio Equipment Directive (RE)

EN 300 328, EN 301 489-1, EN 301 489-17, EN61010-1, EN61010-2-030, EN62311

• Indoor/Outdoor use

European Pressure Equipment Directive 2014/68/EU

Sound Engineering Practice (for all capsules)

With option code /PE3 (for D capsule)

Category III, Module H, Type of Equipment: Pressure Accessory-Vessel, Type of Fluid: Liquid and Gas, Group of Fluid: 1 and 2

EU RoHS Directive

EN IEC 63000

Safety Requirement Standards

EN61010-1, EN61010-2-030

• Installation category: I
(Anticipated transient overvoltage 330 V)
• Pollution degree: 2
• Indoor/Outdoor use

Regulation Conformity of the Wireless Module

• FCC Approval
• ISED Approval

All Rights Reserved. Copyright © 2009, Yokogawa Electric Corporation

■ PHYSICAL SPECIFICATIONS

Wetted Parts Material

Diaphragm, Process Connector
Refer to “MODEL AND SUFFIX CODE.”

Non-wetted Parts Materials

Housing
Low copper cast aluminum alloy

Coating of housing
[for aluminum housing]
Polyester resin powder coating
Mint-green paint (Munsell 5.6BG 3.3/2.9 or its equivalent)
[for option code /P☐ or /X2]
Epoxy and polyurethane resin solvent coating

Degrees of Protection
IP66/IP67, Type 4X

Pipe
Polypropylene

Cover O-rings
Buna-N

Name plate and tag
316 SST tag plate wired onto transmitter

Fill Fluid
Silicone, fluorinated oil (optional)

Weight
- 3.2 kg (7.1 lb)* for Capsule A, B and C
- 3.4 kg (7.4 lb)* for Capsule D

* The weight does not include that of battery pack, mounting bracket and process connector.
Add 0.3kg for the external powered type.

Connections
Refer to “MODEL AND SUFFIX CODE.”

< Related Instruments>
Field Wireless System: Refer to GS 01W01A01-01EN
Field Wireless Management Station YFGW410: GS 01W02D01-01EN
Field Wireless Access Point YFGW510: GS 01W02E01-01EN
Field Wireless Access Point YFGW520: GS 01W02E02-01EN
Field Wireless Media Converter YFGW610: GS 01W02D02-01EN

■ MODEL AND SUFFIX CODES

Model	Suffix Codes	Description
EJX510B **EJX530B**	. . . .	Absolute pressure transmitter Gauge pressure transmitter
Output signal	**-1**	Wireless communication (ISA100.11a protocol); successor of code –L
Measurement span (capsule)	**A**. . . . . . **B**. . . . . . **C**. . . . . . **D**.	8 to 200 kPa (1.16 to 29 psi) 0.02 to 2 MPa (2.9 to 290 psi) 0.1 to 10 MPa (14.5 to 1450 psi) 0.5 to 50 MPa (72.5 to 7200 psi)
Wetted parts material*3	**S**. . . . . . **H**.	Process connector / Diaphragm / Others 316L SST *7 # / Hastelloy C-276 *1 # / 316L SST # or F316L SST # Hastelloy C-276 *1 # / Hastelloy C-276 *1 # / Hastelloy C-276 *1 #
Process connections	**4** . . . . . . **7** . . . . . . **8** **9**	1/2 NPT female 1/2 NPT male G1/2 male *2 M20×1.5 male *2
—	**N**.	Always N
—	**-0**.	Always 0
Amplifier housing	**8** **9**	Cast aluminum alloy with detachable antenna (2 dBi)*5 Cast aluminum alloy without antenna (N connector)*4*5
Electrical connection	**J** . . . . . . **0** . . . . . . **2** . . . . . . **4** . . . . . . **5** . . . . . . **7** . . . . . . **9** . . . . . . **A** . . . . . . **C** . . . . . . **D**	No electrical connection, battery powered type (battery case only; battery cells not included) G1/2 female, one electrical connection without blind plugs, external powered type 1/2 NPT female, two electrical connections without blind plugs, external powered type M20 female, two electrical connections without blind plugs, external powered type G1/2 female, two electrical connections and a blind plug, external powered type*6 1/2 NPT female, two electrical connections and a blind plug, external powered type*6 M20 female, two electrical connections and a blind plug, external powered type*3 G1/2 female, two electrical connections and a 316 SST blind plug, external powered type 1/2 NPT female, two electrical connections and a 316 SST blind plug, external powered type M20 female, two electrical connections and a 316 SST blind plug, external powered type
Integral indicator	**D**	Digital indicator
Mounting bracket	**F** . . **N** . . ►	304 SST 2-inch pipe mounting None
Optional codes		/☐ Optional specification

All Rights Reserved. Copyright © 2009, Yokogawa Electric Corporation

The "►" marks indicates the most typical selection for each specification. Example: EJX530B-1AS4N-08JDN/□.

*1: Hastelloy C-276 or ASTM N10276.
*2: Not applicable for combination of capsule code **D** and wetted parts material code **H**. Threads are based on the withdrawn DIN 16 288.
*3: ⚠ Users must consider the characteristics of selected wetted parts material and the influence of process fluids. The use of inappropriate materials can result in the leakage of corrosive process fluids and cause injury to personnel and/or damage to plant facilities. It is also possible that the diaphragm itself can be damaged and that material from the broken diaphragm and the fill fluid can contaminate the user's process fluids.
Be very careful with highly corrosive process fluids such as hydrochloric acid, sulfuric acid, hydrogen sulfide, sodium hypochlorite, and high-temperature steam (150°C [302°F] or above). Contact Yokogawa for detailed information of the wetted parts material.
*4: Order the antenna separately from accessory option.
*5: Remote antenna cables can be attached. Order separately from accessory option.
*6: Material of a blind plug; aluminum alloy for code 5 and 9, and 304 SST for code 7.
*7: Intergranular corrosion test passed according to ASTM A262 Practice E.
The '#' marks indicate the construction materials conform to NACE material recommendations per MR0175/ISO15156. Please refer to the latest standards for details. Selected materials also conform to NACE MR0103.

■ OPTIONAL SPECIFICATIONS (For Explosion Protected type)

Please select appropriate equipment in accordance with the laws and regulations of the relevant country/region, when it is used in a location where explosive atmospheres may be present.

Item	Description	Code
Factory Mutual (FM)	FM Intrinsically safe Approval Applicable Standard: Class 3600, Class 3610, Class 3611, Class 3810, ANSI/UL-60079-0, ANSI/UL-60079-11, NEMA-250 Intrinsically Safe for Class I, Division 1, Groups A, B, C & D, Class II, Division 1, Groups E, F & G and Class III, Division 1, Class I, Zone 0, in Hazardous Locations, AEx ia IIC Nonincendive for Class I, Division 2, Groups A, B, C & D, Class II, Division 2, Groups F & G and Class III, Division 1, Class I, Zone 2, Group IIC, in Hazardous Locations Enclosure: Type 4X, Temp. Class: T4, Amb. Temp.: –50 to 70°C (–58 to 158°F)	**FS17*1**
ATEX	ATEX Intrinsically safe Approval Applicable Standard: EN IEC 60079-0, EN 60079-11, EN 60079-28 Certificate: KEMA 10ATEX0164 X II 1 G Ex ia op is IIC T4 Ga Degree of protection: IP66/IP67 Process temperature:−50 °C ≤ Tp ≤ +120 °C (−58 °F ≤ Tp ≤ +248°F) Ambient temperature:−50 °C ≤ Ta ≤ +70 °C (−58 °F ≤ Ta ≤ +158 °F)	**KS27*1**
Canadian Standards Association (CSA)	CSA Intrinsically safe Approval No. CSA10CA2325443X Applicable standard: CAN/CSA-C22.2 No.94, C22.2 No.213, CAN/CSA-C22.2 No.61010-1, CAN/CSA-C22.2 No.60079-0, CAN/CSA-C22.2 No.60079-11, CAN/CSA-C22.2 No.60529 Ex ia IIC T4 Ga Intrinsically Safe for Class I, Division 1, Groups A, B, C & D, Class II, Division 1, Groups E, F & G, Class III, Division 1. Nonincendive for Class I, Division 2, Groups A, B, C & D, Class II, Division 2, Groups F & G, Class III, Division 1 Enclosure: IP66/IP67 and Type 4X Temperature Code: T4 Maximum Process Temp.(Tp):120°C (248°F) Amb. Temp.(Tamb): –50 to 70°C (–58 to 158°F)	**CS17*1**
IECEx	IECEx Intrinsically safe Approval Applicable Standard: IEC 60079-0, IEC 60079-11, IEC 60079-28 Certificate: IECEx KEM 10.0074 X Ex ia op is IIC T4 Ga Enclosure: IP66/IP67 Process temperature:−50 °C ≤ Tp ≤ +120 °C (−58 °F ≤ Tp ≤ +248°F) Ambient temperature:−50 °C ≤ Ta ≤ +70 °C (−58 °F ≤ Ta ≤ +158 °F)	**SS27*1**

*1: Only applicable for selecting Electrical connection code J.

All Rights Reserved. Copyright © 2009, Yokogawa Electric Corporation

■ OPTIONAL SPECIFICATIONS

Item		Description		Code
Painting	Color change	Amplifier cover only		P□
	Coating change	Anti-corrosion coating *1		X2
Oil-prohibited use*10		Degrease cleansing treatment		K1
		Degrease cleansing treatment with fluorinated oilfilled capsule. Operating temperature -20 to 80°C (-4 to 176°F)		K2
Capsule fill fluid		Fluorinated oil filled in capsule Operating temperature -20 to 80°C (-4 to 176°F)		K3
Calibration units*2		P calibration (psi unit)	(See Table for Span and Range Limits.)	D1
		bar calibration (bar unit)		D3
		M calibration (kgf/cm^2 unit)		D4
Gold-plated diaphragm*10		Surface of isolating diaphragms are gold plated, effective for hydrogen permeation.		A1
European Pressure Equipment Directive *11		PED 2014/68/EU Category III, Module H, Type of Equipment: Pressure Accessory-Vessel, Type of Fluid: Liquid and Gas, Group of Fluid: 1 and 2		PE3
Material certificate*3		Process connector		M15
Pressure test/ Leak test certificate*9		Test Pressure: 200 kPa (29 psi) *4	Nitrogen(N_2) Gas or Water *8 Retention time: one minute	T05
		Test Pressure: 2 MPa (290 psi) *5		T06
		Test Pressure: 10 MPa (1450 psi) *6		T07
		Test Pressure: 50 MPa (7200 psi) *7		T08
Calibration certificate		Text, Traceability		L4
		Text, Traceability, Primary standards list		L5
		Text, Traceability, Primary standards list, Calibration equipment list		L6
		Text, Traceability, Primary standards list, Calibration equipment list, Calibration equipment certificate		L9

*1: Not applicable with color change option.
*2: The unit of MWP (Max. working pressure) on the name plate of a housing is the same unit as specified by option codes **D1**, **D3**, and **D4**.
*3: Material traceability certification, per EN 10204 3.1 B.
*4: Applicable for capsule code **A**.
*5: Applicable for capsule code **B**.
*6: Applicable for capsule code **C**.
*7: Applicable for capsule code **D**.
*8: Pure nitrogen gas or pure water is used for oil-prohibited use (option codes **K1** and **K2**).
*9: The unit on the certificate is always kPa/MPa regardless of selection of option code **D1**, **D3** and **D4**.
*10: Applicable for wetted parts material code **S**.
*11: Applicable for measurement span code **D**. If compliance with category III is needed, specify this option code.

■ OPTIONAL ACCESSORIES

Product	Part number	Specification
Battery pack assembly	F9915NQ*1	Battery case, Lithium-thionyl chloride batteries 2 pieces
Batteries*2	F9915NR	Lithium-thionyl chloride batteries, 2 pieces
Battery case	F9915NK*3	Battery case only
Remote antenna cable	F9915KU	3 m with mounting bracket
	F9915KV	13 m (3 m+10 m), with a surge protective device and mounting bracket
Antenna	F9915KW	2 dBi standard antenna
	F9915KY	6 dBi high gain antenna*4*5

*1: If you need F9915MA, please purchase F9915NQ. F9915NQ is a set of F9915MA and instruction manual.
*2: Alternatively, Tadiran SL-2780/S, TL-5930/S or VITZROCELL SB-D02 batteries can be purchased from your local distributor.
*3: If you need F9915NS, please purchase F9915NK. F9915NK is a set of F9915NS and instruction manual.
*4: Use of high gain antenna is limited by local regulation of radio and telecommunication law. Consult Yokogawa for details.
*5: F9915KY can not connect directly to the transmitter. Remote antenna cable is required to use F9915KY.

All Rights Reserved. Copyright © 2009, Yokogawa Electric Corporation

■ DIMENSIONS

● Process connections code 7

Unit: mm (approx. inch)

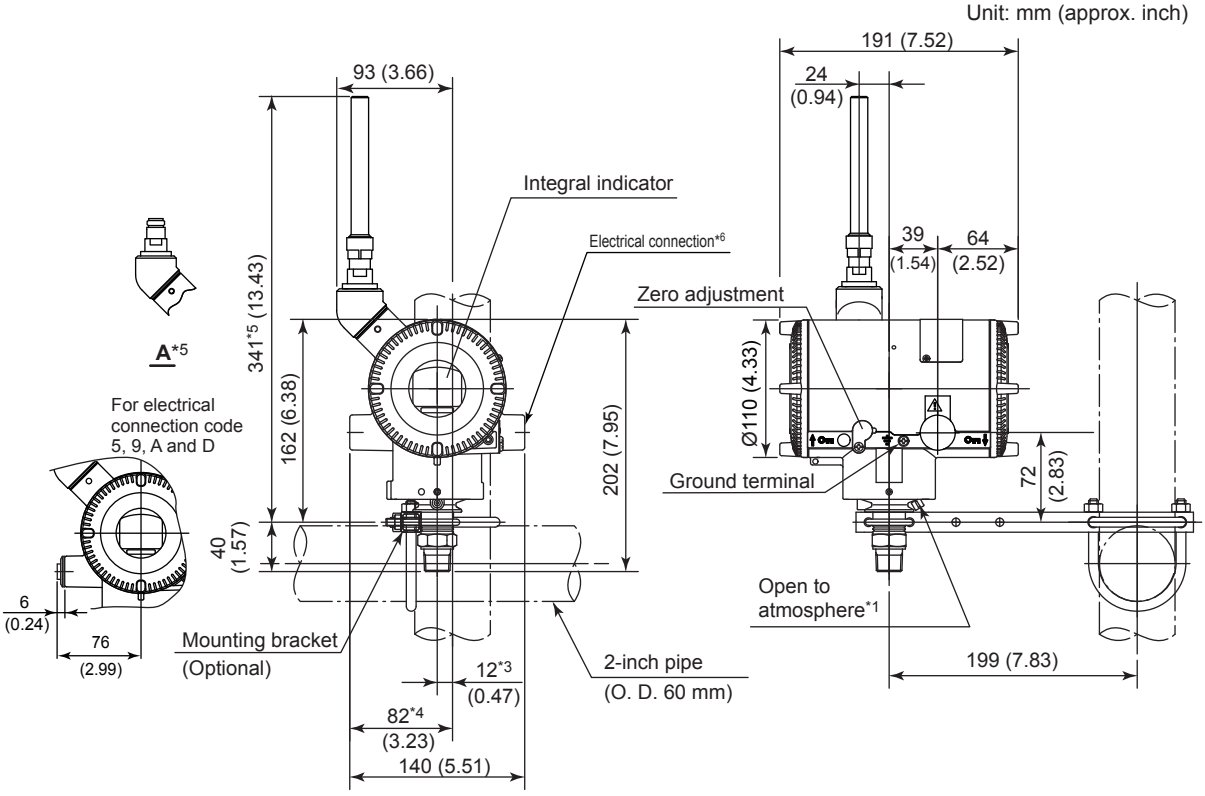

*1: Applicable for EJX530B Measurement span code A, B, and C.
*2: 91 mm (3.58 inch) for Measurement span code D.
*3: 11 mm (0.43 inch) for Measurement span code D.
*4: 80 mm (3.15 inch) for Measurement span code D.
*5: When amplifier housing code 9 is selected, the value is 221 mm (8.70 inch). In this case, the figure is shown as A.
*6: Applicable for the external powered type.
*7: When electrical connection code 7 or C is selected, a blind plug is protruded upto 8 mm from the electrical connection.

● Process connections code 4

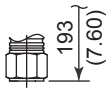

● Process connections code 8 and 9

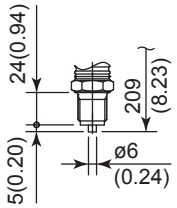

F03E.ai

All Rights Reserved. Copyright © 2009, Yokogawa Electric Corporation

Unit: mm (approx. inch)

● Antenna/Cable

☐ Non-directional antenna

• Gain: 2 dBi

Part number: F9915KW

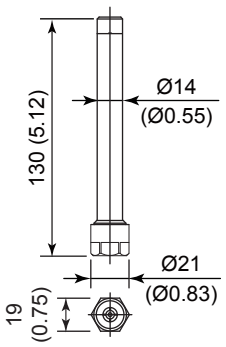

• Gain: 6 dBi

Part number: F9915KY

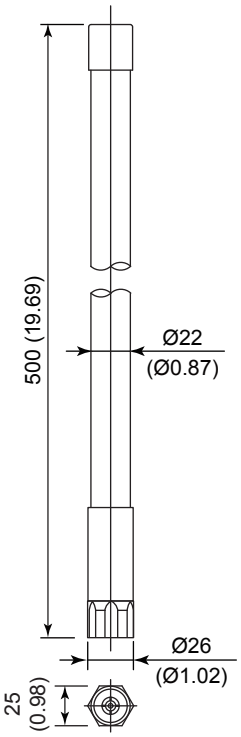

☐ Antenna cable

• Sheath diameter: 11.2 mm

< Without a surge protective device >

Part number: F9915KU

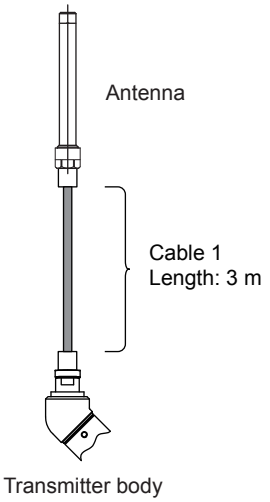

< With a surge protective device >

Part number: F9915KV

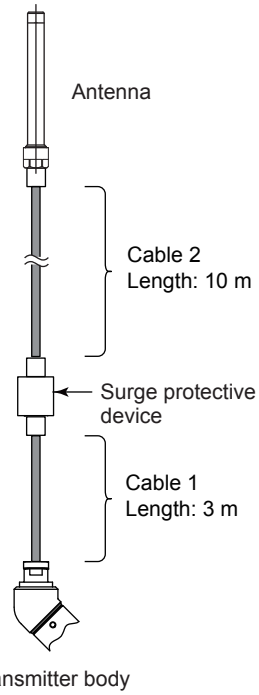

● Antenna mounting bracket

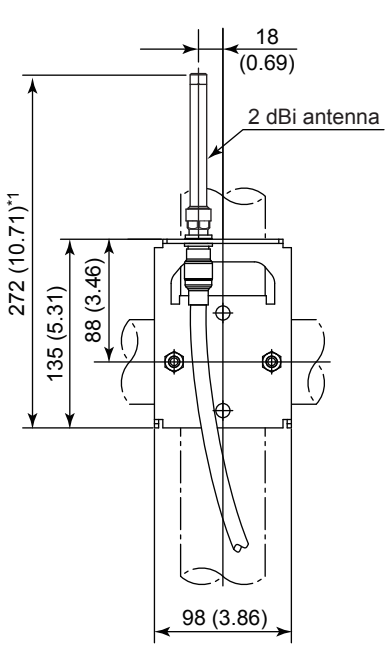

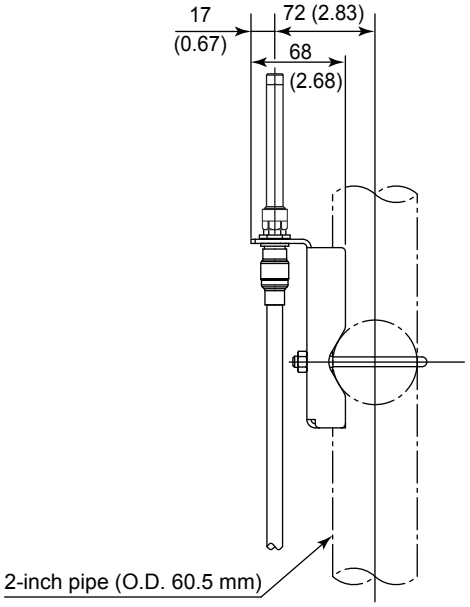

*1: When 6 dBi antenna is selected, the value is 642 mm (25.28 inch).

F04E.ai

All Rights Reserved. Copyright © 2009, Yokogawa Electric Corporation

● Infrared Configuration

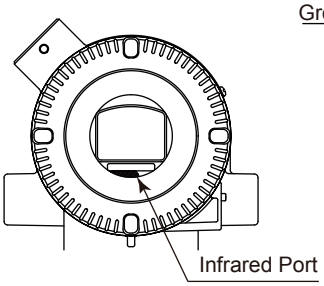

● Terminal Configuration for the External Powered type

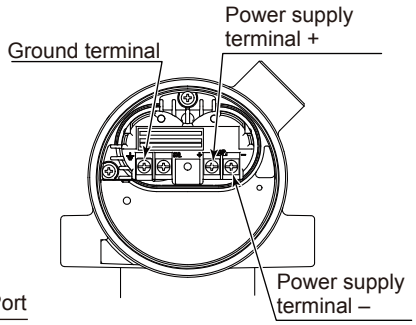

● Terminal Wiring Example for the External Power Source Terminal

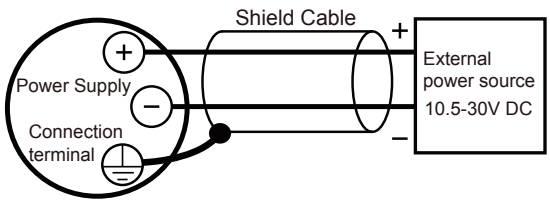

Use shield cables if it is affected by electrical noise.

F05E.ai

<Ordering Information>

Specify the following when ordering

1. Model, suffix codes, and option codes
2. Calibration range and unit
   1) Range
      Calibration range can be specified with range value specifications up to 5 digits for low or high range limits within the range of -32000 to 32000. When reverse range is designated, specify Lower Range Value (LRV) as greater than Upper Range Value (URV).
   2) Unit
      Specify only one unit from Table A.

Table A. Available Range Unit

EJX530B	mmH_2O, mmH_2O (68°F), mmHg, Pa, kPa, MPa, mbar, bar, gf/cm^2, kgf/cm^2, inH_2O, inH_2O (68°F), inHg, ftH_2O, ftH_2O (68°F) or psi.
EJX510B	Torr, Pa abs, kPa abs, MPa abs, mbar abs, bar abs, kgf/cm^2 abs, mmH_2O abs, mmH_2O abs (68°F), mmHg abs, inH_2O abs, inH_2O abs (68°F), inHg abs, ftH_2O abs, ftH_2O abs (68°F), psia, atm.

3. Output mode
   Select Liner.
4. Display setting (SCALE)
   1) Display scale and unit
      Specify either “0 to 100 %” or “Desired Range and Unit” for engineering unit scale:
      - When “Desired Range and Unit” is specified, scale range can be specified with range limit specifications up to 5 digits for low or high range limits within the range of -32000 to 32000. Unit display consists of 6-digit, therefore, if the specified scaling unit excluding “/” is longer than 6-characters, the first 6 characters will be displayed on the unit display.
   2) Display mode
      Select Liner.
5. Tag Number (if required)
   Engraving on the tag plate can be specified by a combination of uppercase letters, lowercase letters, numbers, “- (hyphen)”, “_ (underscore)”. Factory setting is blank unless otherwise specified. The specified letters are written on TAG_Name (16 letters) in the amplifier memory.
6. Software tag (if required)
   Specify this software tag when tag number which is different from the tag number specified in the “Tag Number” is required. The tag number specified in “Software tag” will be entered on “TAG_NAME” (up to 16 letters) in the amplifier memory.
7. Network ID (if required)
   Specify the number from 2 to 65535.When not specified, it will use 1 as the default.

< Factory Setting >

Tag No.	Blank unless otherwise specified in order
Software tag	Blank unless otherwise specified in order
Network ID	‘1‘ unless otherwise specified in order.

< Reference >

1. DPharp EJX™ is a registered trademark of Yokogawa Electric Corporation.
2. Hastelloy; Trademark of Haynes International Inc.

Other company names and product names used in this material are registered trademarks or trademarks of their respective owners.

<Information on EU WEEE Directive>

EU WEEE (Waste Electrical and Electronic Equipment) Directive is only valid in the EU.

This instrument is intended to be sold and used only as a part of equipment which is excluded from WEEE Directive, such as large-scale stationary industrial tools, a large-scale fixed installation and so on, and, therefore, subjected to the exclusion from the scope of the WEEE Directive. The instrument should be disposed of in accordance with local and national legislation/regulations.

All Rights Reserved. Copyright © 2009, Yokogawa Electric Corporation
Subject to change without notice.