General Specifications

DO30G
Sensor for Dissolved Oxygen Analyzer

GS 12J05D03-01E

■ GENERAL

The DO30G sensor for dissolved oxygen is designed for use in water treatment plants such as sewage treatment works, effluent activated sludge process, and potable water treatment. It is also effective in river monitoring, intake protection, fish farming and other fields where water quality is important.

This galvanic cell has a fast response time and good long term stability, and features replaceable diaphragm and cable for easy maintenance. A temperature sensor is incorporated for compensation. The DO30G sensor can be used in either the PB350G/PB360G floating ball holders or in the DOX8HS submersion type holder.



DO30G Sensor



PB350G Floating ball holder

■ FEATURES

DO Sensor with Long-term Stability and Short Electrolyte Stabilization Time

- A DO sensor that uses a special electrolyte, shortening the electrolyte stabilization time and realizing stable measurements over a long period of time.
- Measuring range of 0 to 20 mg/L
- Cartridge-type membrane for easy replacement
- 50 mm thick membrane with high tear resistance and minimal impact from air bubbles

■ SYSTEM

Refer to GS 12A01F02-01EN for 4-wire Converter FLXA402,
GS 12A01A03-01EN for 2-wire liquid analyzer FLXA202, GS 12A01A02-01E for 2-wire liquid analyzer FLXA21 and GS 12J05C02-00E for holders.

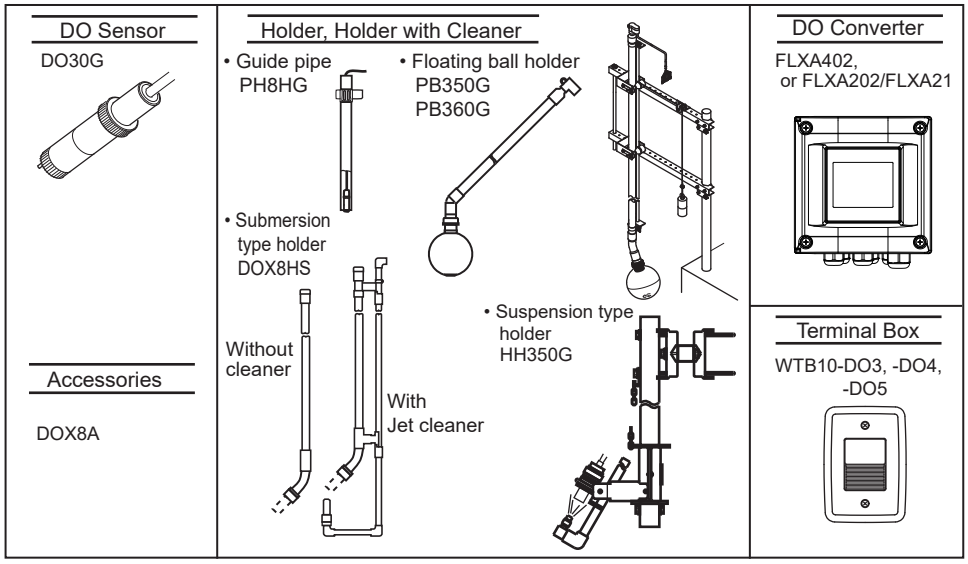

Note: “DO” of DO sensor means dissolved oxygen.

CAUTION

Installation Location of Holders (Guide Pipe, Submersion Type, etc)
The holder should be used in a place that is as vibration free as possible.
Using the holder in a place where it is affected by vibration, may result in damage to the holder.

FLEXA, FLXA are registered trademarks or trademarks of Yokogawa Electric Corporation.
All other company and product names mentioned in this GS are registered trademarks or trademarks of their respective companies.

YOKOGAWA

Yokogawa Electric Corporation
2-9-32, Nakacho, Musashino-shi, Tokyo, 180-8750 Japan

GS 12J05D03-01E
©Copyright May. 2007 (YK)
11th Edition: Sep. 2025 (YK)

■ GENERAL SPECIFICATIONS

GENERAL SPECIFICATIONS of DO30G SENSOR

Dissolved Oxygen: 0 to 20 mg/L (ppm)
Liquid Temperature: 0 to 40˚C
Liquid Pressure: 0 to 100 kPa
Flow speed: 20 cm/s or more
Sensor for Temperature Compensation: Pt1000
Wetted Part Material:
rigid polyvinyl chloride, stainless steel, fluorinated ethylenepropylene, nitrile rubber, heat-resistant soft polyvinyl chloride, and polycarbonate
Cable Length: 3 m, 5 m, 10 m, 15 m and 20 m
Weight: Approx. 0.3 kg + 0.12 × N (kg)
N: cable length in meters (m)
(e.g., for a cable length of 5 m, the weight is approx. 0.9 kg)

CHARACTERISTICS of DO30G SENSOR

Repeatability: 0.1 mg/L or 3% FS, whichever is greater (including sensor)
Temperature Compensation Error:
Within ±3% FS (including sensor) for a ±5˚C change in the range of 0 to 40˚C
Response Time: Within 2 minutes (90% response)(including sensor)

WTB10 Terminal Box

Used when DO converter is installed at a distance from the DO sensor.
Ambient temperature: -10 to 50˚C
Construction: JIS waterproof
Case material: Fiberglass reinforced polycarbonate resin
Electrical connections
DO sensor side: JIS A8 watertight plastic gland
DO converter side: JIS A15 watertight plastic gland with cable (max. 40 m)
Conduit adaptor (optional) available
Case color: Grayish green (Munsell 2.5GY5.0/1.0)
Weight: Body 0.5 kg Mounting hardware: 0.7 kg

DOX8A Parts Set for Maintenance

A set of zero-adjusting reagent and maintenance parts
<Contents>

Zero adjusting reagent (sodium sulphite 500 g)	1 bottle
Membrane assembly (for membrane thickness of 50 μm)	3 sets
Electrolyte for sensor (50 mL)	1 bottle
Syringe for replacing electrolyte	1
Polish for silver electrode (30 g)	1 bottle
Polyethylene beaker (200 mL)	1

■ MODEL AND SUFFIX CODES

1. DO Sensor

Model	Suffix Code	Option Code	Description
DO30G	••••••••••••••	••••••••••••••	Dissolved Oxygen Sensor
—	-NN	••••••••••••••	Always -NN
Membrane thickness	-50	••••••••••••••	50 μm
Cable length	-03	••••••••••••••	3 m
	-05	••••••••••••••	5 m
	-10	••••••••••••••	10 m
	-15	••••••••••••••	15 m
	-20	••••••••••••••	20 m
Cable terminal	-PN	••••••••••••••	Pin terminal (*1)
	-FL	••••••••••••••	M4 ring terminal (*2)
	-FM	••••••••••••••	M3 ring terminal (*3)

*1: Can be used for FLXA402, FLXA202/ FLXA21. For a terminal box, select WTB10-DO3.
*2: Used to connection to FLXA202/FLXA21. For a terminal box, select WTB10-DO4.
*3: Used to connection to FLXA402. For a terminal box, select WTB10-DO5.

2. Terminal Box

Model	Suffix Code	Option Code	Description
WTB10	••••••••••••••••	•••••••••	Terminal box
Applicable system	-DO3	•••••••••	For FLXA402, FLXA202/FLXA21 (*1)
	-DO4	•••••••••	For FLXA202/FLXA21 (*2)
	-DO5	•••••••••	For FLXA402 (*3)
—	-NN	•••••••••	Always -NN
Cable length	-00	•••••••••	No cable
	-05	•••••••••	5 m
	-10	•••••••••	10 m
	-20	•••••••••	20 m
	-30	•••••••••	30 m
	-40	•••••••••	40 m
Option Mounting bracket	/P	•••••••••	Pipe mounting bracket
	/W	•••••••••	Wall mounting bracket
Conduit Adapter	/AWTB	•••••••••	G1/2
	/ANSI	•••••••••	1/2NPT

*1: Pin terminals and cable with pin terminals are used.
*2: M4 screw terminals and cable with M4 ring terminals are used.
*3: M3 screw terminals and cable with M3 ring terminals are used.

3. Accessories (parts set for maintenance)

Model	Suffix Code	Option Code	Description
DOX8A	••••••••••••••	•••••••••	Parts set for maintenance (for membrane thickness of 50 μm)
Sensor	-M	•••••••••	For membrane replacing type sensor
—	*B	•••••••••	Style B

4. Spare Parts

Part Name	Part No.	Remarks
Membrane and electrolyte for sensor	K9171HK	3 membrane assemblies (thickness of 50 μm) 50 mL of electrolyte Syringe for replacing electrolyte
Zero adjusting reagent	L9920BR	Sodium sulfite 500g
Polisher	K9088PE	For polishing silver electrode 30g

All Rights Reserved. Copyright © 2007, Yokogawa Electric Corporation

■ DIMENSIONS

DO Sensor DO30G

Unit: mm

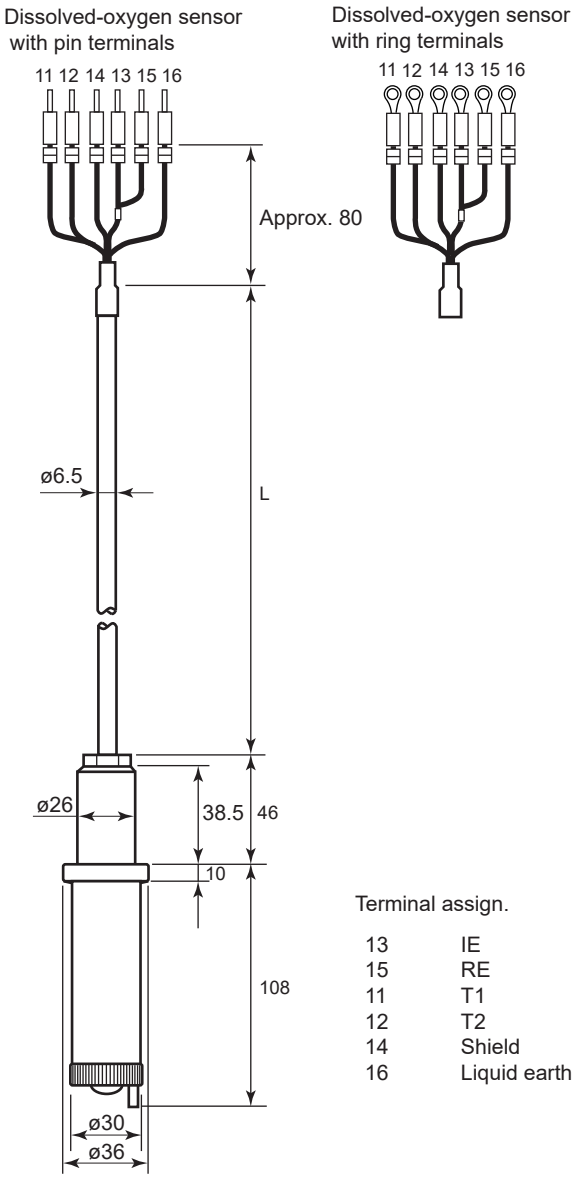

Terminal assign.

13	IE
15	RE
11	T1
12	T2
14	Shield
16	Liquid earth

Pin terminals

Model and Suffix Codes	L	Weight(kg)
DO30G-NN-50-03-PN	3 000	Approx. 0.6
DO30G-NN-50-05-PN	5 000	Approx. 0.8
DO30G-NN-50-10-PN	10 000	Approx. 1.4
DO30G-NN-50-15-PN	15 000	Approx. 2.0
DO30G-NN-50-20-PN	20 000	Approx. 2.6

Ring terminals

Model and Suffix Codes	L	Weight (kg)
DO30G -NN-50-03-FL	3 000	Approx. 0.6
DO30G-NN-50-03-FM		
DO30G-NN-50-05-FL	5 000	Approx. 0.8
DO30G-NN-50-05-FM		
DO30G-NN-50-10-FL	10 000	Approx. 1.4
DO30G-NN-50-10-FM		
DO30G-NN-50-15-FL	15 000	Approx. 2.0
DO30G-NN-50-15-FM		
DO30G-NN-50-20-FL	20 000	Approx. 2.6
DO30G-NN-50-20-FM		

Terminal Box WTB10

Unit: mm

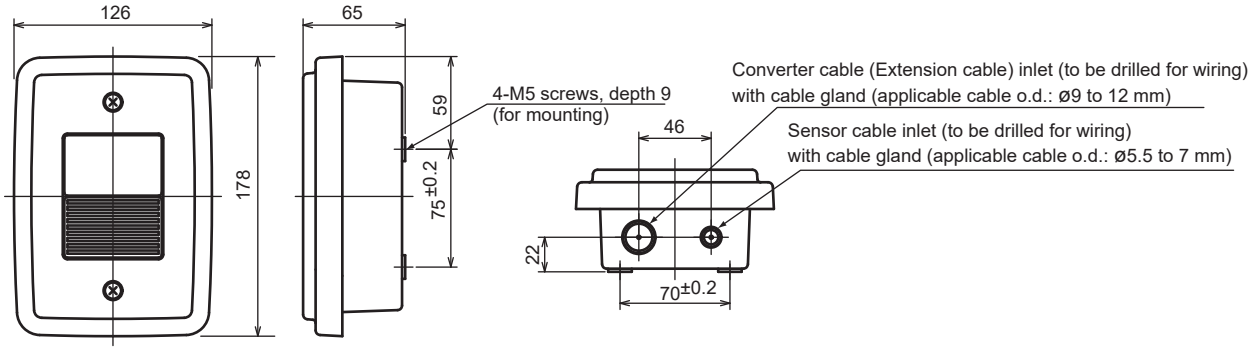

All Rights Reserved. Copyright © 2007, Yokogawa Electric Corporation

Cable gland for the terminal box

Unit: mm

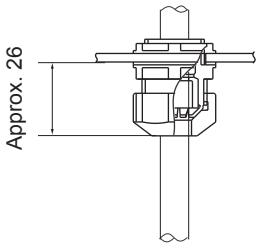

(a) Watertight plastic cable gland (St'd)

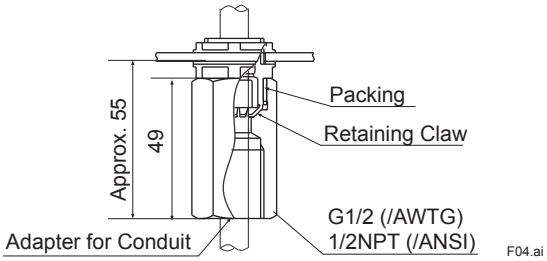

Please use the watertight cable gland of the attachment.
If metallic conduit is directly connected with the case,
it becomes the factor of the measurement error.

(b) Watertight plastic cable gland with conduit adaptor

Extension cable for WTB10 (Not supplied if the Cable length "-00" is selected)

Unit: mm

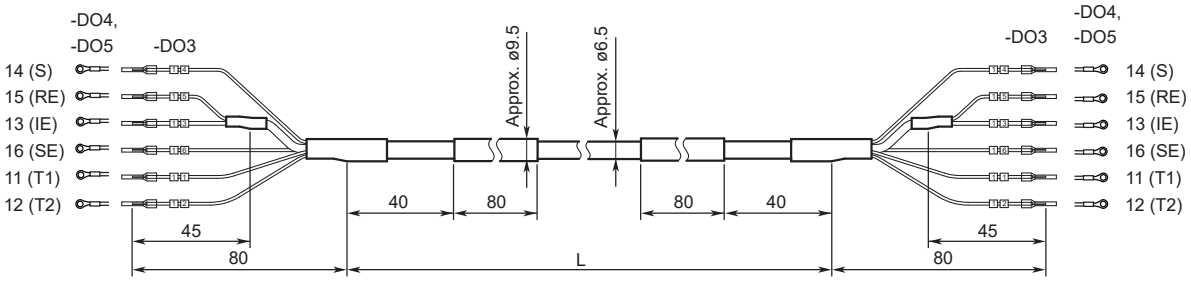

Model and Suffix Code	L (mm)
WTB10-DO□-NN-05	Approx. 5 000
WTB10-DO□-NN-10	Approx. 10 000
WTB10-DO□-NN-20	Approx. 20 000
WTB10-DO□-NN-30	Approx. 30 000
WTB10-DO□-NN- 40	Approx. 40 000

Weight: Approx. 0.12 kg/m

Pipe mounting bracket (Option: /P)

Unit: mm

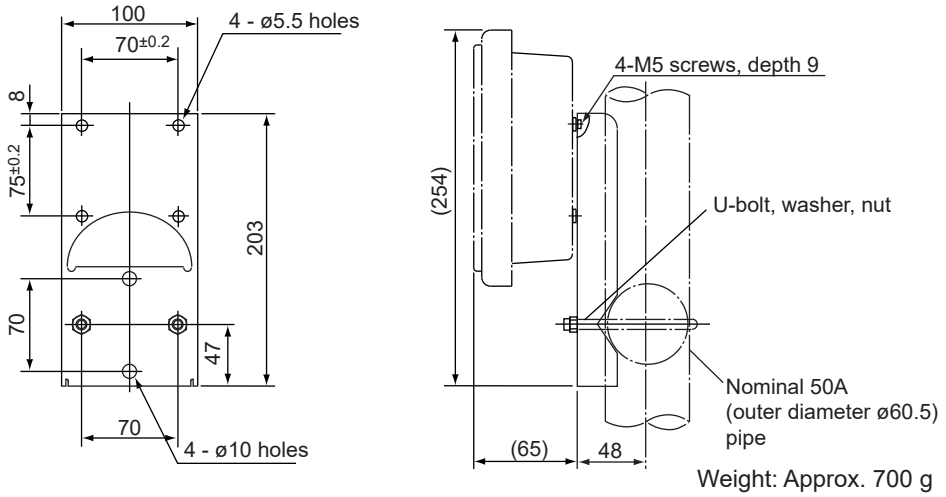

Weight: Approx. 700 g

All Rights Reserved. Copyright © 2007, Yokogawa Electric Corporation

Wall mounting bracket (Option: /W)

Unit: mm

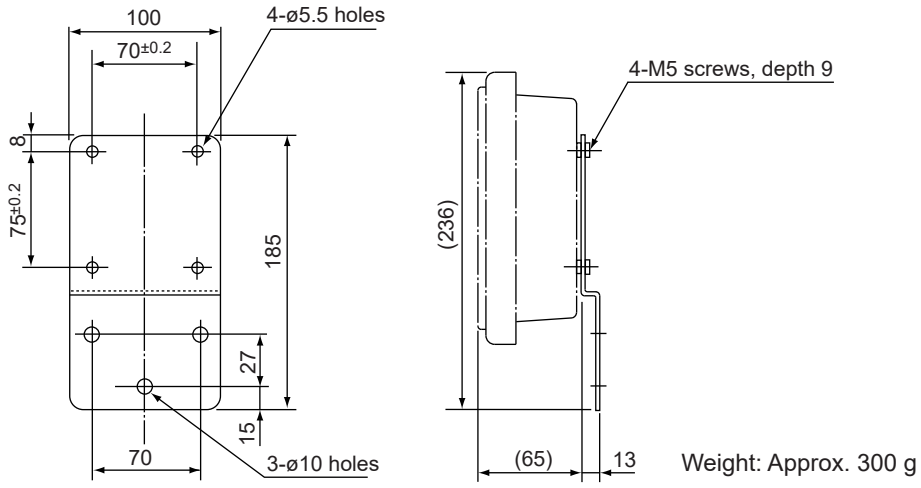

Weight: Approx. 300 g

■ WIRING DIAGRAM EXAMPLE

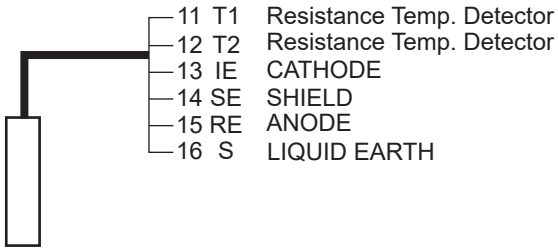

Note: Use WTB10 Terminal Box when DO converter is installed at a distance from the DO sensor.

All Rights Reserved. Copyright © 2007, Yokogawa Electric Corporation

Inquiry Specifications Sheet for Dissolved Oxygen Analyzer

For inquiries on the Yokogawa dissolved oxygen analyzer, please tick (✓) the appropriate box (☐) and write down the relevant information in the blanks.

1. General

Name of your company: _____
Name of person : _____ Dept. or sect : _____ (Phone No. _____)
Name of plant : _____
Measuring point : _____
Purpose of use : ☐ Indication ☐ Recording ☐ Alarm ☐ Control
Power supply : _____ V☐AC _____ Hz ☐ DC _____

2. Measurement Conditions

(1) Liquid temperature : _____ to _____, Normal _____ [°C]
(2) Liquid pressure : _____ to _____, Normal _____ [kPa]
(3) Flow speed : _____ to _____, Normal _____ [m/s]
(4) Name of liquid to be measured : _____
(5) Components of liquid to be measured : _____
(6) Other conditions : _____

3. Installation environment

(1) Ambient temperature: Approx. _____ [°C]
(2) Location : ☐ Outdoors ☐ Indoors _____
(3) Other information : _____

4. Requirements

(1) Measurement range : ☐ 0 to 20 mg/L ☐ _____
(2) System component selection: ☐ Sensor ☐ Holder ☐ Converter ☐ Cleaning system ☐ Calibration set
☐ Parts set for maintenance ☐ Terminal Box
(3) Length of sensor cable : ☐ 3 m ☐ 5 m ☐ 10 m ☐ 15 m ☐ 20 m
(4) Type of holder : ☐ Guide pipe ☐ Submersion ☐ Floating ball ☐ Suspension
(5) Cleaning method : ☐ No cleaning ☐ Jet cleaning
(6) Other requirements : _____

All Rights Reserved. Copyright © 2007, Yokogawa Electric Corporation
Subject to change without notice.