UNIVERSAL PRODUCT LINE:
STEEL EXTERNALS — JACKETED PUMPS
223C Series™, 4223C Series™, 323A Series™, 4323A Series™

Section	2302
Page	2302.1
Issue	C

TABLE OF CONTENTS

Related Products 1
Operating Range 1
Series Description 1
Features & Benefits 2
Jacketing 2
Relief Valve Configurations 3
Port Location Options 3
Cutaway View & Pump Features 4
Model Number Key 5
Standard Materials of Construction 5
Special Materials & Options Selection Guidelines 6
Specifications 7
Port Options for ProPort™ Casing 8
Dimensions – H through Q Sizes *(223C Series™, 4223C Series™)* 9
Dimensions – QS Size *(223C Series™, 4223C Series™)* 10
Dimensions – N & R Sizes – Jacketed Bracket *(323A Series™, 4323A Series™)* 11
Dimensions – RS Size – Jacketed Bracket *(323A Series™, 4323A Series™)* 12
NPSH Required 13

RELATED PRODUCTS

Steel Externals, Non-Jacketed Pumps: Catalog Section 2301

Cast Iron, Jacketed Pumps: Catalog Section 1402

Stainless Steel, Jacketed Pumps: Catalog Section 2702

SERIES DESCRIPTION

223C Series™, 4223C Series™

The Universal Product Line has the broadest range of sealing options of all pumps built by Viking Pump. The U-Plus™ bracket design accepts numerous component and cartridge mechanical seals, as well as packing. These products come standard with a jacketed head and bracket.

This is Viking Pump's most versatile line of internal gear pumps with many design and material options. These series are available with the ProPort™ casing and a wide variety of flange types and sizes as well as both 90 degree and opposite port arrangements* enabling flexibility when connecting pumps to piping.

323A™ Series, 4323A Series™

Viking's largest product series in the Universal Product Line offers high capacity and a variety of sealing arrangements including component or cartridge seals as well as packing. These products come standard with a jacketed bracket and optional jacketed head.



KK4223C

*90 degree port arrangements available in sizes H-Q

OPERATING RANGE

SERIES	NOMINAL FLOW		MAXIMUM PRESSURE		TEMPERATURE RANGE		VISCOSITY RANGE	
	GPM	m^3h	PSI	Bar	°F	°C	SSU	cSt
223C Series™	15 - 500	3 - 114	200	14	−20 to +800	−25 to +425	28 to 2,000,000	0.1 to 440,000
4223C Series™	15 - 500	3 - 114	200	14	−20 to +800	−25 to +425	28 to 2,000,000	0.1 to 440,000
323A Series™	600 - 1,600	136 - 364	200	14	−20 to +800	−25 to +425	28 to 2,000,000	0.1 to 440,000
4323A Series™	600 - 1,600	136 - 364	200	14	−20 to +800	−25 to +425	28 to 2,000,000	0.1 to 440,000

UNIVERSAL PRODUCT LINE:
STEEL EXTERNALS — JACKETED PUMPS

223C Series™, 4223C Series™, 323A Series™, 4323A Series™

FEATURES & BENEFITS

- Positive displacement internal gear pump principle handles a broad range of viscosities with constant flow rate
- Jacketing for steam, hot oil or warm water circulation
- **ProPort™ Casing (223C Series™ & 4223C Series™):**
  - » Adaptable port design offers a variety of port sizes and types, enabling flexibility when connecting pumps to piping
  - » H-Q sizes available with optional opposite porting
  - » Casing drain allows the pump to be drained without removing the head
  - » Optional O-ring joint seals for high pressure or difficult to seal applications
  - » Internal circulation promotes flow behind the rotor
- **U-Plus™ Bracket (223C Series™ & 4223C Series™):**
  - » Seal options include packing, single component seals, cartridge lip seals and both single and double cartridge mechanical seals
  - » Stainless steel window guards offer protection from rotating parts
- Footed one-piece steel bracket provides rigid mounting to help maintain alignment, which extends seal and bearing life
- Enlarged bearing housing used in conjunction with a spacer coupling permits easy cartridge seal installation and removal in place without removing the head and rotor/shaft
- Axial rotor thrust is controlled by double row ball bearing or tapered roller bearings; bushings provide a secondary point of radial shaft support
- Rotatable bearing housing provides easy rotor end clearance adjustment to compensate for viscosity or wear
- Numerous material options are available for bushings, idler pins, shafts, rotors, idlers and elastomers
- Carbon steel externals offer higher temperature and maximum working pressures

3 YEAR LIMITED WARRANTY

Viking Universal Product Line pumps carry a three year limited warranty. See catalog section 1000 for details.

JACKETING

Jacketed pumps provide a cavity, or jacket, on the external wall of the pump through which steam or heat transfer liquid can be passed to control the temperature of the fluid in the pump. The heat transfer medium flows in a closed loop back to the boiler or heater. Applications include “melting” ambient temperature solids like asphalt which solidify in the pump when it cools, and maintaining precise temperature control in processes like manufacturing polymers and epoxy resins.

Standard-Jacketed Pumps

Standard-Jacketed pumps include series 223C & 4223C. They feature jacketing on the head and bracket only, and are typically used for melting ambient temperature solids.

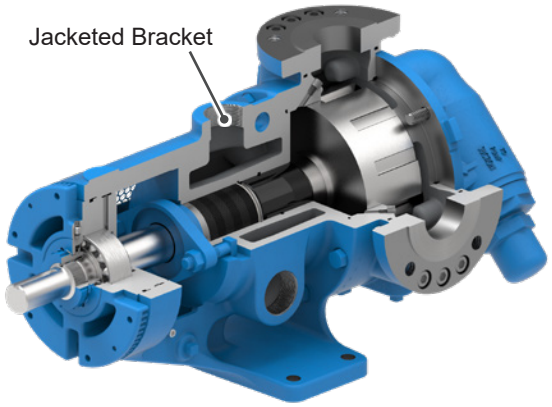

KK223C
Jacketed Pump Cutaway

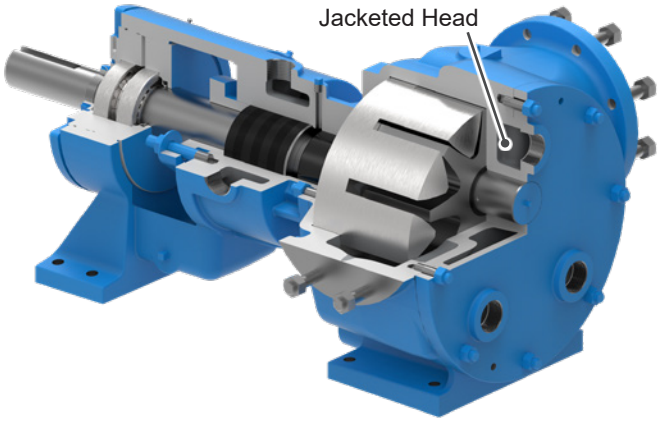

N323A
Jacketed Pump Cutaway

RELIEF VALVE CONFIGURATIONS

Jacketed pumps are provided with a jacketed head with no relief valve as standard. Integral pressure relief valves in jacketed and non-jacketed configurations are available on “L” through “N” sizes, but require a non-jacketed valve-type head.

The “N” 323A & 4323A pumps are standard with a jacketed bracket, non-jacketed head and non-jacketed relief valve. A jacketed head, or a jacketed relief valve with non-jacketed valve-type head, is available as an option.

The “R” 323A & 4323A pumps are standard with a jacketed bracket, a jacketed head and a non-jacketed relief valve. “RS” models have a jacketed bracket and head with no relief valve.

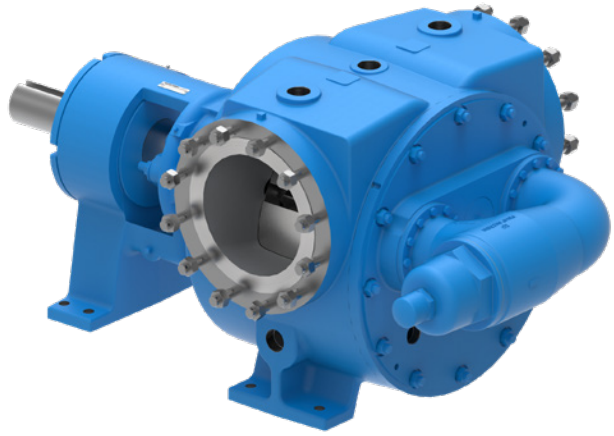

RS323A
Jacketed Head with Non-Jacketed Relief Valve Shown

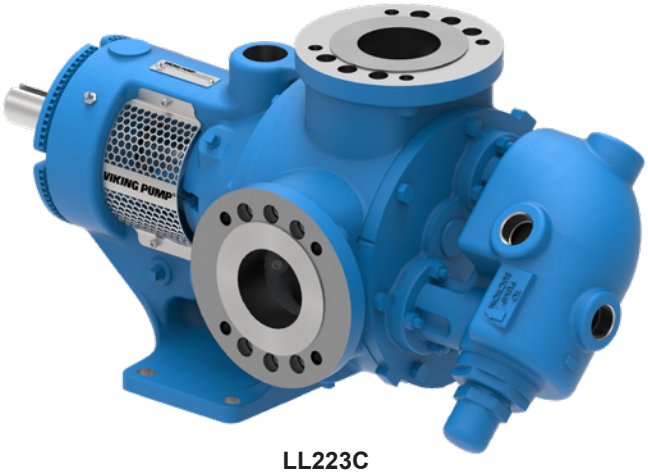

LL223C
Jacketed Relief Valve

PORT LOCATION OPTIONS

223C Series™, 4223C Series™

90° port options:

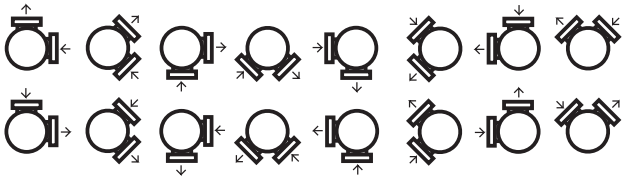

Opposite port options:

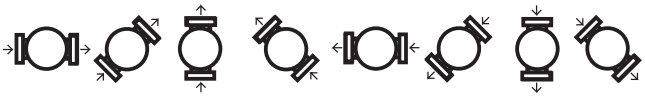

NOTE: See page 2302.8 for a complete list of port options for ProPort™ casing by size.

H-Q sizes are standard with 90 degree ports, optional opposite port casings are available.

QS size is standard with opposite ports.



HL223C
Opposite Ports

UNIVERSAL PRODUCT LINE:
STEEL EXTERNALS — JACKETED PUMPS

223C Series™, 4223C Series™, 323A Series™, 4323A Series™

CUTAWAY VIEW & PUMP FEATURES

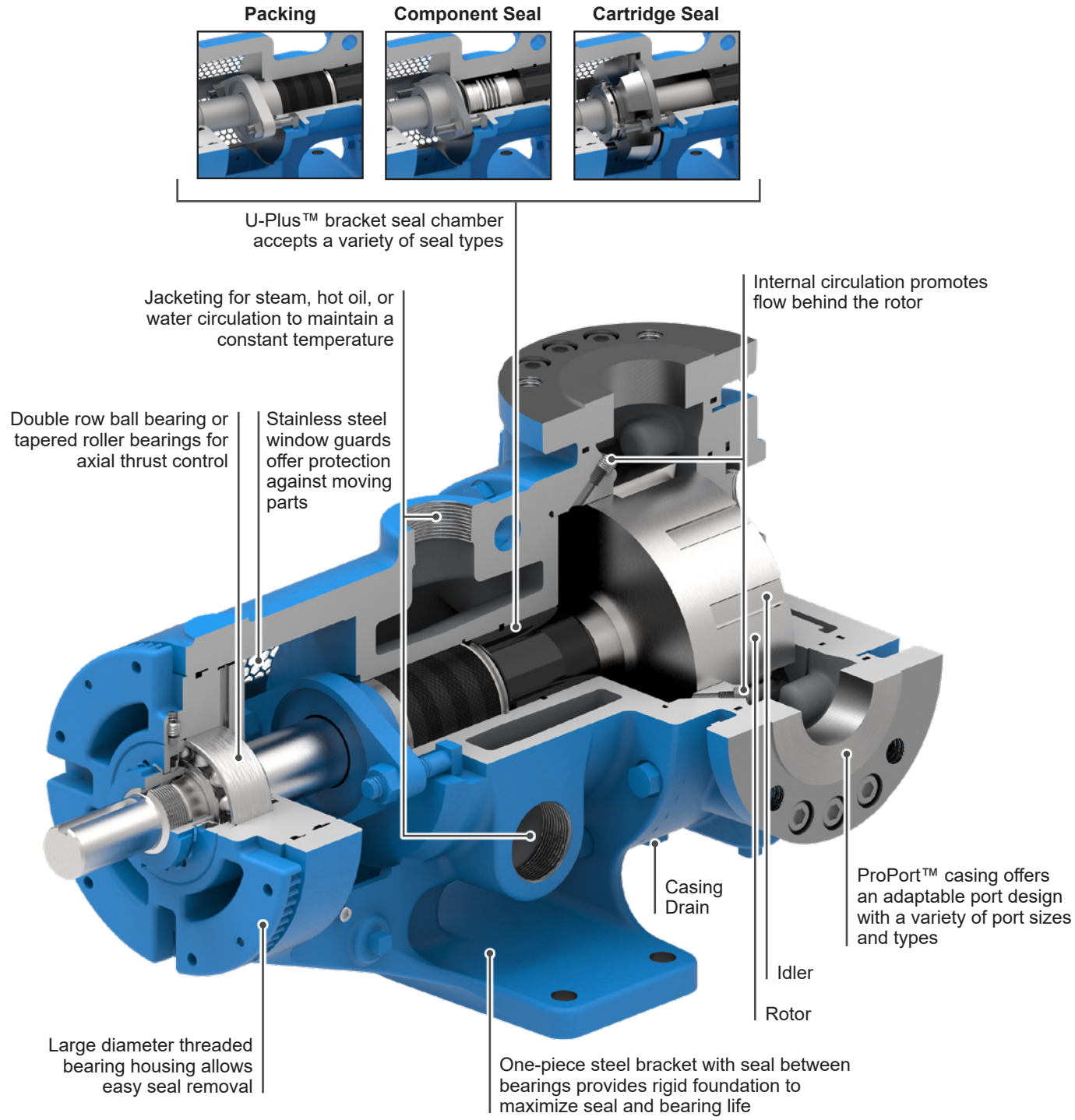

MODEL NUMBER KEY

K K 4 2 2 3 C

Size:
H LS
HL Q
K QS
KK N
L R
LL RS

Shaft Seal:
4 = Mechanical Seal
Blank = Packing

Jacketing:
2 = Jacketed
3* = Foot Mount Casing w/ Jacketed Bracket

Basic Series Configuration

Material of Construction:
3 = Steel Externals

Seal Location:
A = Universal Bracket for Stuffing Box Seals (N-RS Only)
C = U-Plus™ Bracket for Stuffing Box or Behind the Rotor Seals

* Only the N through RS sizes are foot mount with jacketed bracket (3).

STANDARD MATERIALS OF CONSTRUCTION

Component	Standard Material	
Casing	Steel, ASTM A216, Class WCB	
Head	Steel, ASTM A216, Class WCB	
Bolt on Ports (Sizes H through QS only)	Steel, ASTM A216, Class WCB	
Bracket	Steel, ASTM A216, Class WCB	
Idler	**Standard**	① Cast Iron, ASTM A148, Class 35B
	Steel Fitted	①② Cast Iron, ASTM A148, Class 35B
Rotor	**Standard**	③ Cast Iron, ASTM A148, Class 35B
	Steel Fitted	④ Steel, ASTM A148, Grade 80-40
Shaft	⑤ Steel, ASTM A108, Grade 1045	
Idler Pin	Hardened Steel, ASTM A108, Grade 1045	
Idler Bushing	**(4223C, 4323A)**	Carbon Graphite
	(223C, 323A)	Bronze, ASTM B584 (B505), Alloy C93700
Bracket Bushing	**(4223C, 4323A)**	Carbon Graphite
	(223C, 323A)	Bronze, ASTM B584 (B505), Alloy C93700
Pressure Relief Valve	⑥ Steel, ASTM A216, Class WCB	
Standard Packing (223C, 323A)	Braided PTFE	
Standard Mechanical Seal (4223C, 4323A)	Carbon vs. Silicon Carbide Faces, FKM Elastomers	

① H and HL sizes have a powdered metal idler: Powdered Metal MPIF 35, FC-0208-50 (G) , Powdered Metal MPIF 35, FC-0208-45 (H, HL)
② Q and QS sizes have a hardened steel idler when pump is steel fitted: ASTM A148 Grade 80-40.
③ KK, LS, QS, N and RS sizes have ductile iron rotor: ASTM A536 Grade 60-40-18.
④ Material specification for HL steel rotor is AISI 8620, LS steel rotor is ASTM A148 80-50.
⑤ K, KK, L, LL and LS sizes are high strength steel ASTM A434 Type 4140 Grade BC or equivalent.
⑥ L, LL and LS relief valve bodies are stainless steel.

SPECIAL MATERIALS & OPTIONS SELECTION GUIDELINES

For High Viscosities – Above 2,500 SSU (550 cSt)

- Steel fitted construction recommended above the following viscosities, according to pump size:

Viscosity	Pump Size											
	H	HL	K	KK	L	LL	LS	Q	QS	N	R	RS
SSU	25,000	7,500	25,000	75,000	25,000	2,500	75,000	7,500	75,000	75,000	25,000	75,000
cSt	5,500	1,700	5,500	17,000	5,500	550	17,000	1,700	17,000	17,000	5,500	17,000

- Extra clearances, depending on viscosity. See ES-2 for recommendations.
- Special Sealing:
  FKM or Buna N Type 1 component seals good up to 15,000 SSU (3,300 cSt).
  PTFE Type 9 seals good up to 25,000 SSU (5,500 cSt).
  Packed gland good up to 2,000,000 SSU (440,000 cSt).
  Cartridge triple lip seals available to 2,000,000 SSU (440,000 cSt).
- Larger ports may be required depending on suction conditions.
- Pump should be operated at slower than normal speeds, which may require a larger pump.
- For viscosities over 250,000 SSU (55,000 cSt), contact factory for additional pump construction and operation recommendations.

For low viscosities or non-lubricating liquids – Below 100 SSU (20 cSt)

- Carbon graphite bushings.
- Pump should be operated at slower than normal speeds, which may require a larger pump.

For high temperatures – Above 225°F (105°C)

- High temperature elastomers – FKM up to 350°F (175°C); Buna up to 225°F (105°C); PTFE up to 450°F (230°C);
- High temperature bushings recommended depending on temperature, size and specific material. See ESB-3 for recommendations.
- Additional operating clearances may be required depending on temperature, size and specific material. See ES-2 for recommendations.
- For temperatures above 450°F (230°C), special materials and sealing requirements may be needed. Contact factory for recommendations.
- Pump should be operated at slower than normal speeds, which may require a larger pump.

For abrasive or dirty liquids

- If possible, filter or strain out the abrasives present.
- Wear resistant bushings - hardened cast iron, tungsten carbide or Colmonoy coated.
- Abrasive-resistant idler pin - tungsten carbide or Colmonoy plus TC filler coated pins.
- Hardened or hard-coated shaft.
- Abrasive-resistant seals.
- For high concentrations of abrasives or particle sizes greater than 250 microns (0.010 in), contact factory for recommendations.
- Pump should be operated at slower than normal speeds, which may require a larger pump.
- Consult factory for specific recommendations.

SPECIFICATIONS

Model Number	③ Standard Port Size	Nominal Pump Rating (100 SSU & below)			Max. Hydrostatic Pressure		① Maximum Discharge Pressure		Max. Recommended Temperature for Standard Pump		Approx. Shipping Weight with Valve	
	Inches	GPM	m^3/h	RPM	PSIG	BAR	PSIG	BAR	°F	°C	Lbs.	Kg.
H223C	1 ½	15	3	1750	400	28	200	14	450	230	50	23
H4223C	1 ½	15	3	1750	400	28	200	14	450	230	50	23
HL223C	1 ½	30	6.8	1750	400	28	200	14	450	230	52	24
HL4223C	1 ½	30	6.8	1750	400	28	200	14	450	230	52	24
K223C	2	80	18	780	400	28	200	14	450	230	141	64
K4223C	2	80	18	780	400	28	200	14	450	230	141	64
KK223C	2	100	23	780	400	28	200	14	450	230	141	64
KK4223C	2	100	23	780	400	28	200	14	450	230	141	64
L223C	2 ½	135	31	640	400	28	200	14	450	230	230	104
L4223C	2 ½	135	31	640	400	28	200	14	450	230	230	104
LL223C	3	140	32	520	400	28	200	14	450	230	242	110
LL4223C	3	140	32	520	400	28	200	14	450	230	242	110
LS223C	3	200	45	640	400	28	200	14	450	230	258	114
LS4223C	3	200	45	640	400	28	200	14	450	230	258	114
Q223C	4	300	68	520	400	28	200	14	450	230	520	117
Q4223C	4	300	68	520	400	28	200	14	450	230	520	117
QS223C	6	500	114	520	400	28	200	14	450	230	600	272
QS4223C	6	500	114	520	400	28	200	14	450	230	600	272
N323A	6	600	136	350	400	28	200	14	② 450	230	1,000	453
N4323A	6	600	136	350	400	28	200	14	② 450	230	1,000	453
R323A	8	1,100	250	280	400	28	200	14	② 450	230	1,435	651
R4323A	8	1,100	250	280	400	28	200	14	② 450	230	1,435	651
RS323A	10	1,600	364	280	400	28	125	9	② 450	230	2,500	1,140
RS4323A	10	1,600	364	280	400	28	125	9	② 450	230	2,500	1,140

① For maximum recommended discharge pressures at different viscosities, see performance curves, which can be electronically generated with the Viking Pump Curve Generator, located on www.vikingpump.com. If suction pressure exceeds 50 PSIG, consult factory. Higher pressures possible with factory approval based on application details.

② Extra clearances are required above 225°F / 105°C. Higher temperatures can be handled with special construction, consult factory.

③ Ports are suitable for Class 150 steel or stainless steel companion flanges or flanged fittings.

UNIVERSAL PRODUCT LINE:
STEEL EXTERNALS — JACKETED PUMPS
223C Series™, 4223C Series™, 323A Series™, 4323A Series™

PORT OPTIONS FOR PROPORT™ CASING

Port Options	Pump Sizes								
	H	HL	K	KK	L	LL	LS	Q	QS
1.5" Class 150 ①	S ®	S ®							
1.5" Class 300 ②	✓ ®	✓ ®							
2" Class 150 ①	✓	✓	S ®	S ®					
2" Class 300 ②	✓	✓	✓ ®	✓ ®					
2.5" Class 150 ①					S ®				
2.5" Class 300 ②					✓ ®				
3" Class 150 ①			✓	✓	✓ ®	S ®	S ®		
3" Class 300 ②			✓	✓	✓	✓ ®	✓ ®		
4" Class 150 ①			✓ ®	✓ ®	✓	✓	✓	S ®	
4" Class 300 ②					✓	✓	✓	✓ ®	
6" Class 150 ①									S ®
6" Class 300 ②									✓ ®
DIN 32 PN16 *	✓ ®	✓ ®							
DIN 40 PN16 *	✓	✓							
DIN 50 PN16 *	✓	✓	✓ ®	✓ ®					
DIN 65 PN16 *			✓	✓	✓	✓ ®			
DIN 80 PN16 *			✓	✓	✓	✓ ®	✓ ®		
DIN 100 PN16 *					✓	✓	✓		
DIN 150 PN16 *								✓	✓ ®

✓ = Available Port Option

S = Standard Porting

® = Flanges Designed with a Raised Face

① = Ports are suitable for use with Class 150 steel or stainless steel companion flanges or flanged fittings

② = Ports are suitable for use with Class 300 steel or stainless steel companion flanges or flanged fittings

* Ports are sutable for use with DIN PN16 steel or stainless steel companion flanges or flanged fittings

DIMENSIONS – H THROUGH Q SIZES (223C SERIES™, 4223C SERIES™)

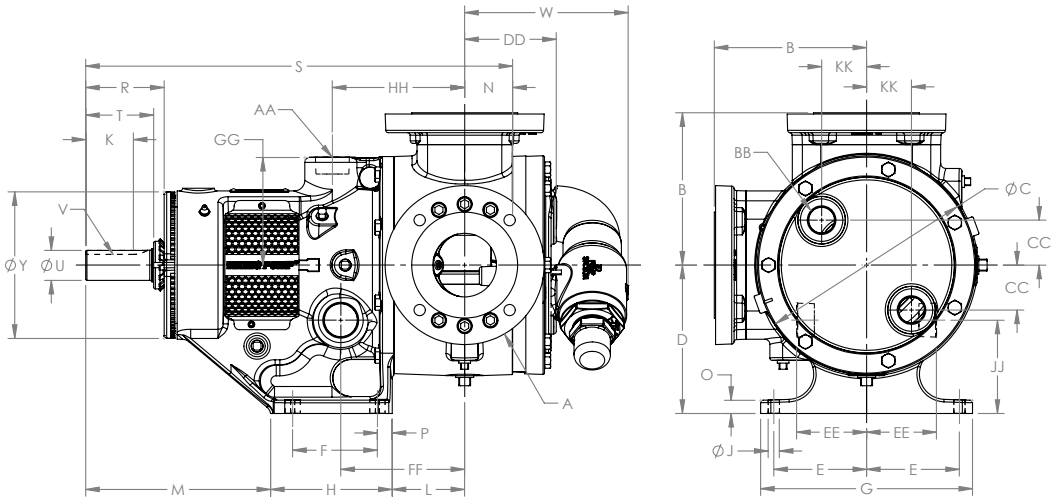

These dimensions are average and not for construction purposes. Certified prints on request.

Model Number		①						②③									②③	
Packed	Mech. Seal	A (in)		B	C	D	E	F	G	H	J	K	L	M	N	O	P	R
H223C	H4223C	1.5	in	3.50	4.75	3.50	2.75	2.25	6.75	3.50	0.47	0.99	3.38	5.19	1.19	0.56	0.62	2.20
HL223C	HL4223C		mm	89	121	89	70	57	171	89	12	25	86	132	30	14	16	56
K223C	K4223C	2	in	5.25	8.00	5.50	4.00	2.75	9.25	4.00	0.53	1.42	3.00	9.38	1.75	0.62	0.62	2.84
KK223C	KK4223C		mm	133	203	140	102	70	235	102	13	36	76	238	44	16	16	72
L223C	L4223C	2.5	in	7.19	10.25	7.00	4.38	4.00	10.00	5.38	0.53	2.25	3.58	8.89	1.75	0.62	0.62	3.70
			mm	183	260	178	111	102	254	137	13	57	91	226	44	16	16	94
LL223C	LL4223C	3	in	7.19	10.25	7.00	4.38	4.00	10.00	5.38	0.53	2.25	3.58	8.89	2.25	0.62	0.62	3.70
			mm	183	260	178	111	102	254	137	13	57	91	226	57	16	16	94
LS223C	LS4223C	3	in	7.19	10.25	7.00	4.38	4.00	10.00	5.38	0.53	2.55	4.75	9.12	2.44	0.62	0.62	3.90
			mm	183	260	178	111	102	254	137	13	65	121	232	62	16	16	99
Q223C	Q4223C	4	in	8.25	14.00	8.75	4.12	4.00	10.00	6.00	0.69	3.58	6.62	11.12	3.00	0.75	1.00	5.20
			mm	210	356	222	105	102	254	152	18	91	168	282	76	19	25	132

Model Number											④							④
Packed	Mech. Seal		S	T	U (in)	V (in)	W	Y	AA (in)	BB (in)	CC	DD	EE	FF	GG	HH	JJ	KK
H223C	H4223C	in	13.25	1.62	0.75	.19 x .09	4.04	5.75	0.75	0.50	0.84	2.41	1.83	4.04	2.39	4.04	1.76	0.43
HL223C	HL4223C	mm	337	41			103	146	19	13	21	61	46	103	61	103	45	11
K223C	K4223C	in	18.13	2.25	1.12	.25 x .12	7.00	6.75	1.25	1.25	1.75	3.25	2.75	5.78	4.01	5.78	3.38	0.00
KK223C	KK4223C	mm	461	57			178	171	32	32	44	83	70	147	102	147	86	0
L223C	L4223C	in	19.63	3.13	1.44	.38 x .19	7.18	7.00	1.25	1.00	3.00	3.81	3.30	5.85	5.12	6.25	4.40	0.00
		mm	499	80			182	178	32	25	76	97	84	149	130	159	112	0
LL223C	LL4223C	in	20.12	3.13	1.44	.38 x .19	7.68	7.00	1.25	1.00	3.00	4.31	3.30	5.85	5.12	6.25	4.40	0.00
		mm	511	80			195	178	32	25	76	109	84	149	130	159	112	0
LS223C	LS4223C	in	21.69	3.50	1.44	.38 x .19	7.72	7.00	1.25	1.00	3.00	4.50	3.30	7.00	5.12	7.40	4.40	0.00
		mm	551	89			196	178	32	25	76	114	84	178	130	188	112	0
Q223C	Q4223C	in	26.75	4.50	1.94	.50 x .25	11.25	8.38	1.50	1.00	3.75	5.06	4.50	6.62	7.00	7.62	5.50	3.75
		mm	679	114			286	213	38	25	95	129	114	168	178	194	140	95

① Unless otherwise noted, ports are suitable for class 150 ANSI stainless steel companion flanges or flanged fittings.

② H/HL bracket foot has slotted foot mounting holes. Dimension F = 1.65-2.38 [42-60] and dimension P = 0.52-0.65 [13-16].

③ L/LL/LS bracket foot has slotted foot mounting holes. Dimension F = 3.81-4.19 [81-106] and dimension P = 0.45-0.64 [12-16].

④ Q/QS jacketed heads have 3 connection points on a 3.75 radius.
Two are at the 3 and 6 o'clock positions, and the third is .97 to the right of the vertical centerline and 3.62 above the horizontal centerline.

DIMENSIONS – QS SIZE (223C SERIES™, 4223C SERIES™)

Dimensions shown in inches with millimeter equivalent shown in parentheses

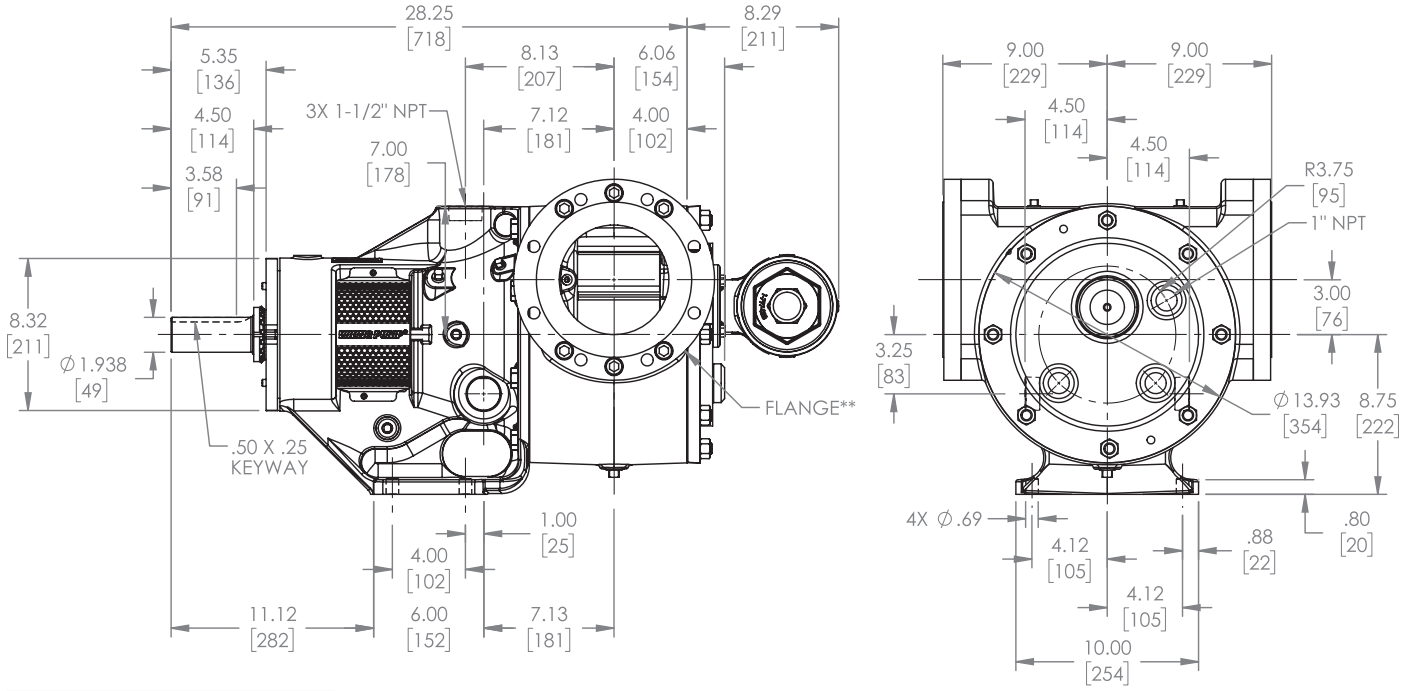

Model Number	
Packed	Mechanical Seal
QS223C	QS4223C

* Ports for steam or hot oil jacketing are inch standard NPT threads.

223C/4223C ports suitable for use with Class 150 ANSI steel or stainless steel companion flanges or flanged fittings.

DIMENSIONS – N & R SIZES – JACKETED BRACKET (323A SERIES™, 4323A SERIES™)

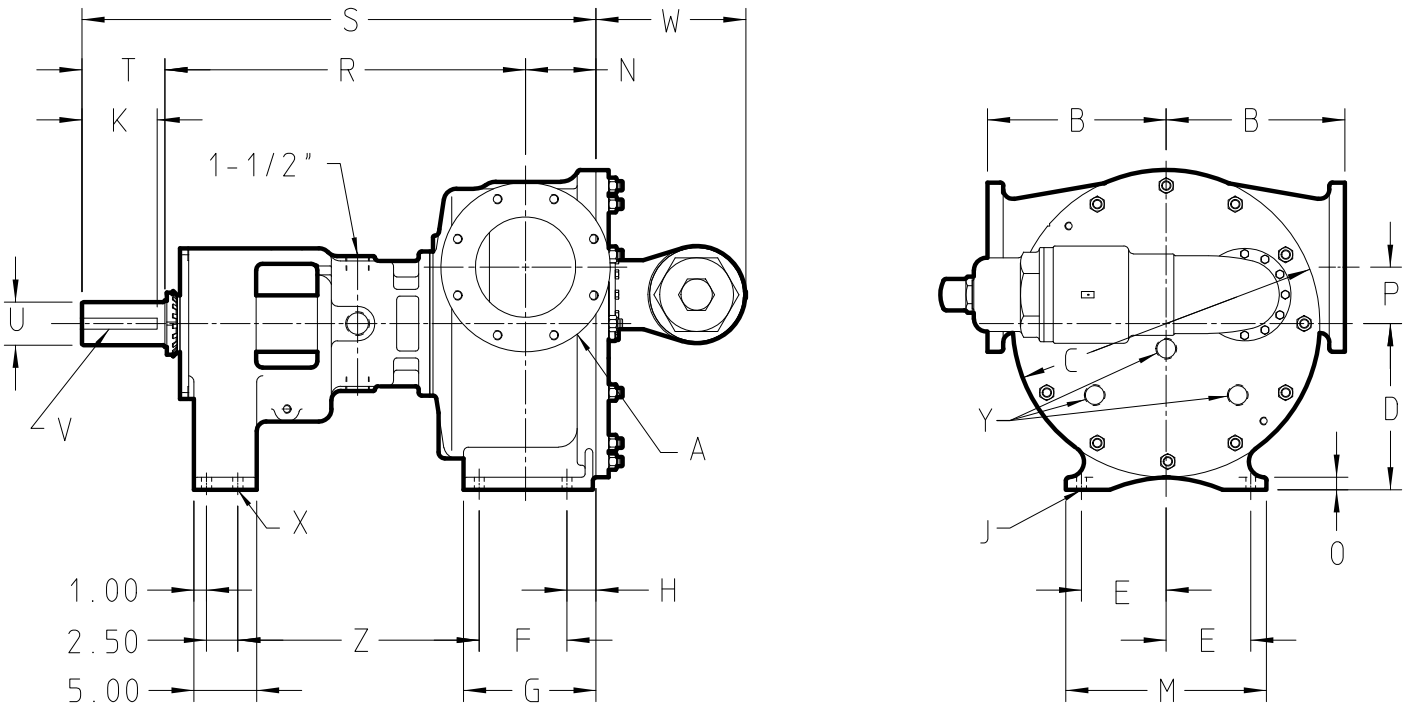

Model Number		A (in)		B	C	D	E	F	G	H	J	K	M	N	O	P	R	S	T	U (in)	V (in)	W	X	Y (in)	Z
Packed	Stuffing Box Seal																								
N323A	N4323A	① 6	in	9.75	17.25	9.50	5.00	6.25	8.69	1.62	0.69	4.50	12.00	4.50	1.00	3.00	26.00	36.50	6.00	2.44	.62 x.31	8.63	0.69	N/A	18.94
			mm	248	438	241	127	159	221	41	18	114	305	114	25	76	660	927	152			219	18		481
R323A	R4323A	① 8	in	14.25	24.50	13.25	6.75	7.00	10.56	2.31	0.78	6.00	16.00	5.62	1.00	4.50	28.75	41.00	6.62	3.44	.88 x.44	12.00	0.69	1.25	19.25
			mm	362	622	337	171	178	268	59	20	152	406	143	25	114	730	1041	168			305	18		489

NOTE: The N size is standard with a jacketed bracket and non-jacketed head and non-jacketed relief valve, while the “R” size is standard with a jacketed bracket, a jacketed head, and a non-jacketed relief valve. “RS” contact factory for jacketing options.

NOTE: N and R sizes are opposite ported and non-rotatable.

① Ports are suitable for use with Class 150 ANSI steel or stainless steel companion flanges or flanged fittings.

DIMENSIONS – RS SIZE – JACKETED BRACKET (323A SERIES™, 4323A SERIES™)

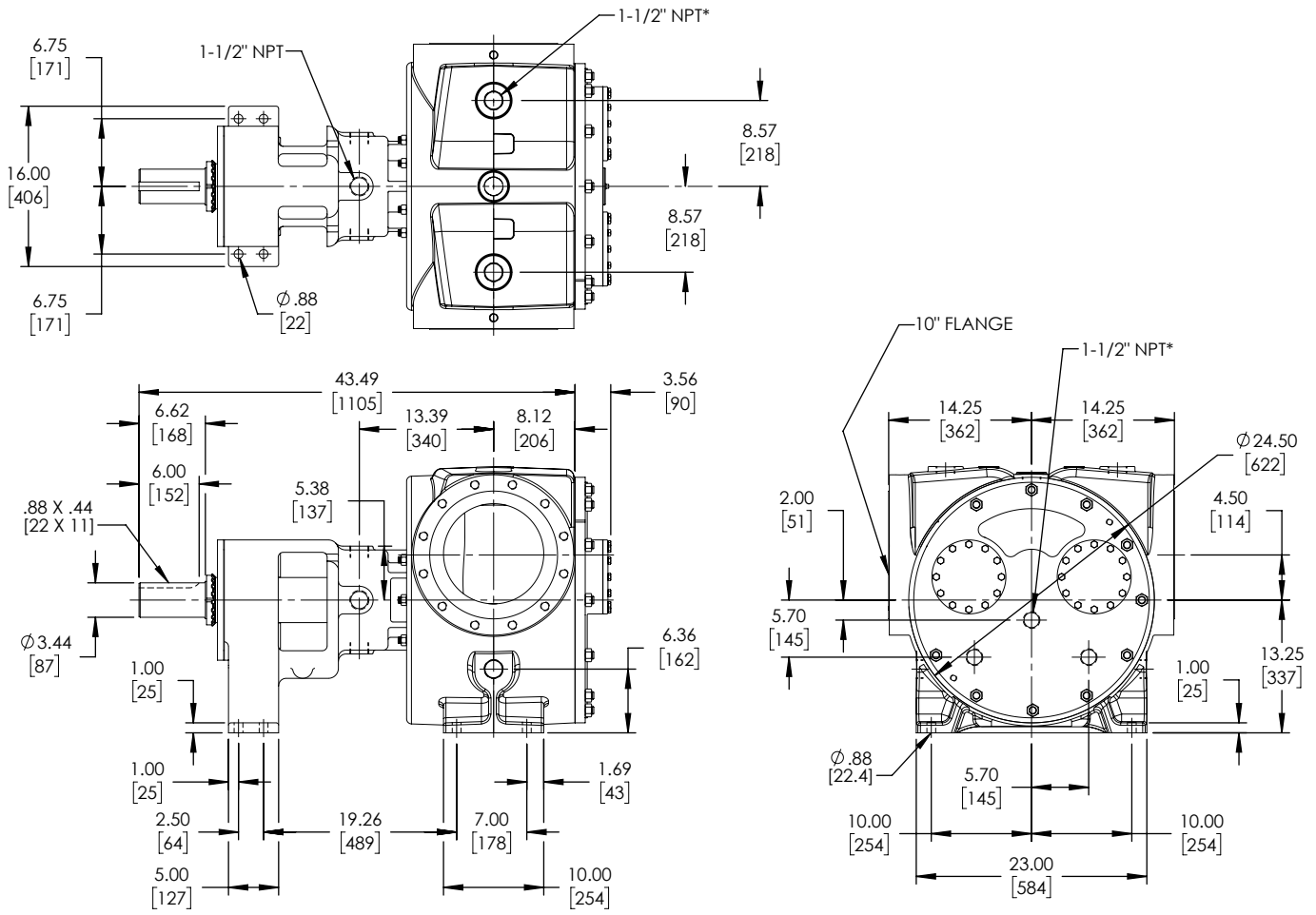

* Ports for steam or hot oil jacketing are inch standard NPT threads.

NOTE: RS size pumps are only available with a jacketed casing, as shown. RS pumps standard with raised face flanged ports.

NOTE: RS size is opposite ported and non-rotatable.

NPSH REQUIRED

Printed performance curves are not available.

Performance curves can be electronically generated with the Viking Pump Curve Generator on vikingpump.com.

NPSHR data is not available on the pump selector.

NPSH (Net Positive Suction Head): The $NPSH_R$ (Net Positive Suction Head Required by the pump) is given in the table below and applies for viscosities through 750 SSU. $NPSH_A$ (Net Positive Suction Head – Available in the system) must be greater than the $NPSH_R$. For a complete explanation of NPSH, see Application Data Sheet AD-19.

FOR VISCOSITIES UP TO 750 SSU – See $NPSH_R$ table below.

$NPSH_R$ for high viscosities can be estimated using the following method:

1. Calculate line loss for a 1 foot long pipe of a diameter matching the pump inlet port size. Use your flow rate and max viscosity.

2. Convert this value into Feet of Liquid (S.G. 1.0)

3. Add this value to the $NPSH_R$ value in the chart below.

$NPSH_R$ – FEET OF LIQUID (Specific Gravity 1.0), Viscosities up to 750 SSU

PUMP SIZE	PUMPS SPEED, RPM														
	100	125	155	190	230	280	350	420	520	640	780	950	1150	1450	1750
H, HL	—	—	—	—	1.7	1.8	1.9	2.1	2.4	2.8	3.4	4.5	6.2	9.5	13.5
K, KK	—	1.7	1.8	1.9	2.1	2.3	2.8	3.3	4.4	6.3	9.1	—	—	—	—
L	1.6	1.8	2.0	2.2	2.5	3.0	3.8	5.0	7.3	10.8	—	—	—	—	—
LL	1.6	1.8	2.0	2.2	2.5	3.0	3.8	5.0	7.3	—	—	—	—	—	—
LS	1.6	1.8	2.0	2.2	2.5	3.0	3.8	5.0	7.3	10.8	—	—	—	—	—
Q, QS	1.9	2.1	2.3	2.7	3.3	4.2	6.1	8.4	12.7	—	—	—	—	—	—
N	2.1	2.3	3.5	4.5	6.3	9.5	15.0	—	—	—	—	—	—	—	—
R	6.1	7.1	8.3	10.1	12.1	15.2	—	—	—	—	—	—	—	—	—
RS	7.0	8.5	10.4	13.1	17.2	22.4	—	—	—	—	—	—	—	—	—