UNIVERSAL PRODUCT LINE:
CAST IRON — JACKETED PUMPS
224C Series™, 1224C Series™, 4224C Series™,
224A Series™, 4224A Series™, 324A Series™, 1324A Series™, 4324A Series™

Section	2402
Page	2402.1
Issue	C

TABLE OF CONTENTS

Related Products 1
Operating Range 1
Series Description 1
Features & Benefits 2
Jacketing 2
Relief Valve Configurations 3
Port Location Options 3
Cutaway View & Pump Features
(224C Series™, 1224C Series™, 4224C Series™) 4
Cutaway View & Pump Features
(324A Series™, 1324A Series™, 4324A Series™) 5
Model Number Key 6
Standard Materials of Construction 6
Special Materials & Options Selection Guidelines 7
Specifications 8
Port Options for Optional ProPort™ Casing 9
Dimensions – H through Q Sizes 10
Dimensions – H through Q Sizes *(Continued)* 11
Dimensions – QS Size 12
Dimensions – M Size 13
Dimensions – N, R & RS Sizes – Jacketed Bracket
(324A, 1324A, 4324A) 14
NPSH Required 15

RELATED PRODUCTS

Cast Iron, Non-Jacketed Pumps: Catalog Section 2401

Steel Externals, Jacketed Pumps: Catalog Section 2302

Stainless Steel, Jacketed Pumps: Catalog Section 2702

SERIES DESCRIPTION

224C Series™, 1224C Series™, 4224C Series™:

The Universal Product Line from Viking Pump offers the most extensive range of sealing options among all Viking pump models. Featuring the innovative U-Plus™ bracket design, these pumps accommodate a wide variety of sealing configurations—including component seals (used in the stuffing box or behind the rotor), packing, cartridge seals, and Viking Pump's proprietary O-Pro® seals. Each model in this series comes standard with a jacketed head and bracket for enhanced thermal control and versatility.

As Viking Pump's most adaptable line of internal gear pumps, the 224C, 1224C, and 4224C Series provide numerous design and material options to meet diverse application needs. These series are compatible with the ProPort™ casing, which supports a broad selection of port types and sizes, as well as both 90-degree and opposite port arrangements. This flexibility simplifies integration into existing piping systems and enhances installation efficiency.

324A Series™, 1324A Series™, 4324A Series™:

Viking's largest product series in the Universal Product Line offer high capacity and a variety of sealing arrangements including component or cartridge mechanical seals, packing and O-Pro® seals. These products come standard with a jacketed bracket and optional jacketed head.



HL224C



Q224C



RS324A

OPERATING RANGE

SERIES	NOMINAL FLOW		MAXIMUM PRESSURE		TEMPERATURE RANGE		VISCOSITY RANGE	
	GPM	m^3h	PSI	Bar	°F	°C	SSU	cSt
224C Series™	15 - 500	3 - 114	200	14	−60 to +450	−50 to +230	28 to 2,000,000	0.1 to 440,000
1224C Series™	8 - 400	1.8 - 91	200	14	0 to +350	−15 to +175	100 to 2,000,000	20 to 440,000
4224C Series™	15 - 500	3 - 114	200	14	−60 to +450	−50 to +230	28 to 2,000,000	0.1 to 440,000
224A Series™	to 420	to 95	200	14	−60 to +450	−50 to +230	28 to 2,000,000	0.1 to 440,000
4224A Series™	to 420	to 95	200	14	−60 to +450	−50 to +230	28 to 2,000,000	0.1 to 440,000
324A Series™	600 - 1,600	136 - 364	200	14	−60 to +450	−50 to +230	28 to 2,000,000	0.1 to 440,000
1324A Series™	550 - 1,500	125 - 340	200	14	0 to +350	−15 to +175	100 to 75,000 *	20 to 17,000 *
4324A Series™	600 - 1,600	136 - 364	200	14	−60 to +450	−50 to +230	28 to 2,000,000	0.1 to 440,000

* Consult factory for viscosities exceeding the stated operating range

UNIVERSAL PRODUCT LINE:
CAST IRON — JACKETED PUMPS

224C Series™, 1224C Series™, 4224C Series™, 224A Series™, 4224A Series™, 324A Series™, 1324A Series™, 4324A Series™

FEATURES & BENEFITS

- Positive Displacement Internal Gear pumping principle handles a broad range of viscosities with constant flow rate
- **Optional ProPort™ Casing (224C Series™, 1224C Series™ & 4224C Series™):**
  - » Adaptable port design offers a variety of port sizes and types, enabling flexibility when connecting pumps to piping
  - » H-Q sizes available with optional opposite porting
  - » Casing drain allows the pump to be drained without removing the head
  - » Optional O-ring joint seals for high pressure or difficult to seal applications
  - » Internal circulation promotes flow behind the rotor
- **U-Plus™ Bracket (224C Series™, 1224C Series™ & 4224C Series™):**
  - » Seal options include packing, O-Pro® Barrier seal, single component seals, cartridge lip seals and cartridge single and double mechanical seals. Various seal flush plans are available.
  - » Stainless steel window guards offer protection from rotating parts
- Footed one-piece iron bracket provides rigid mounting to help maintain alignment, which extends seal and bearing life
- Series designed with an enlarged bearing housing; used in conjunction with a spacer coupling permits easy cartridge seal installation and removal in place without removing the head and rotor/shaft
- Axial rotor thrust is controlled by double row ball bearing or tapered roller bearings; bushings provide a secondary point of radial shaft support
- Rotatable bearing housing provides easy rotor end clearance adjustment to compensate for viscosity or wear
- Numerous material options are available for the bushings, idler pin, shaft, rotor, idler and elastomers
- Gear and pump geometry has been optimized based on more than 100 years of experience
- Can be used with direct drive, gear reducer or gearmotor drive, or belt-drive

3 YEAR LIMITED WARRANTY

For warranty details, please go to: vikingpump.com/warranty

JACKETING

Jacketed pumps provide a cavity, or jacket, on the external wall of the pump through which steam or heat transfer liquid can be passed to control the temperature of the fluid in the pump. The heat transfer medium flows in a closed loop back to the boiler or heater. Applications include “melting” ambient temperature solids like asphalt which solidify in the pump when it cools, and maintaining precise temperature control in processes like manufacturing polymers and epoxy resins.

Standard-Jacketed Pumps

Standard-Jacketed pumps include the 224C Series™, 1224C Series™ & 4224C Series™. They feature jacketing on the head and bracket only, and are typically used for melting ambient temperature solids. 324A Series™, 1324A Series™ and 4324A Series™ pumps are standard with jacketed bracket and optional jacketed head.

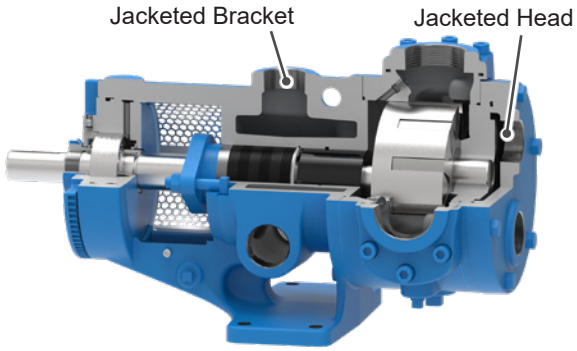

Jacketed Pump Cutaway – KK224C
Shown with ProPort Casing and NPT ports

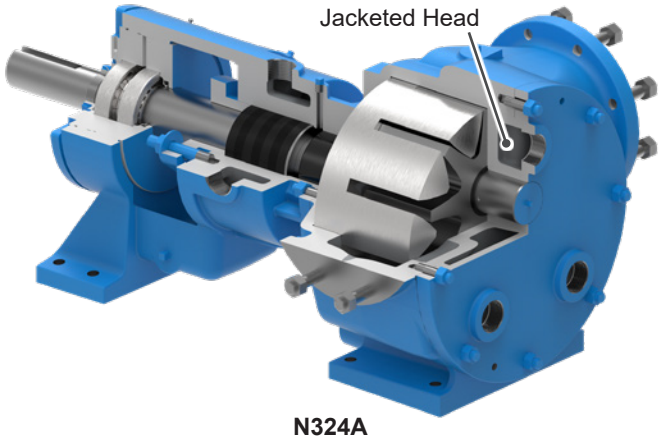

N324A
Jacketed Pump Cutaway

RELIEF VALVE CONFIGURATIONS

Jacketed pumps are provided with a jacketed head with no relief valve as standard. Integral pressure relief valves in jacketed (L-N sizes) and non-jacketed (H-N sizes) configurations are available, but require a non-jacketed valve-type head.

The N size 324A Series™, 1324A Series™ & 4324A Series™ pumps are standard with a jacketed bracket, non-jacketed head and non-jacketed relief valve. A jacketed head, or a jacketed relief valve with non-jacketed valve-type head, is available as an option.

The R size 324A Series™, 1324A Series™ & 4324A Series™ pumps are standard with a jacketed bracket, a jacketed head and a non-jacketed relief valve. RS models have a jacketed bracket and head with no relief valve.

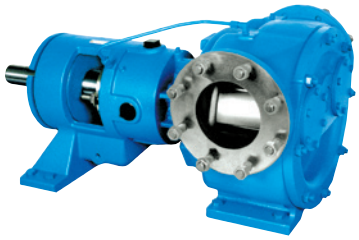

N4324A
Non-Jacketed Head with Coverplates Shown



N324A
Jacketed Head Shown

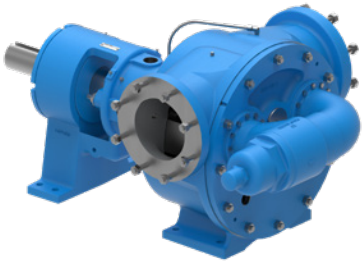

R324A
Non-Jacketed Relief Valve Shown



N4324A
Jacketed Relief Valve Shown

PORT LOCATION OPTIONS

90° port options:

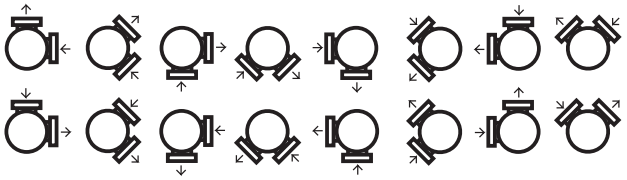

Opposite port options:

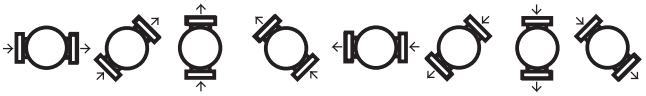

NOTE: See page 2402.9 for a complete list of port options for ProPort™ casing by size.

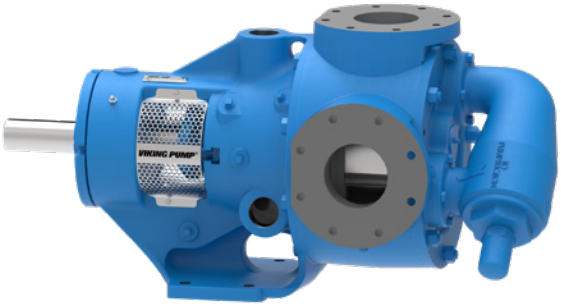

Q224C with Standard Single Piece Casing, 90° Ports



HL224C
Opposite Ports

UNIVERSAL PRODUCT LINE:
CAST IRON — JACKETED PUMPS
224C Series™, 1224C Series™, 4224C Series™,
224A Series™, 4224A Series™, 324A Series™, 1324A Series™, 4324A Series™

CUTAWAY VIEW & PUMP FEATURES *(224C SERIES™, 1224C SERIES™, 4224C SERIES™)*

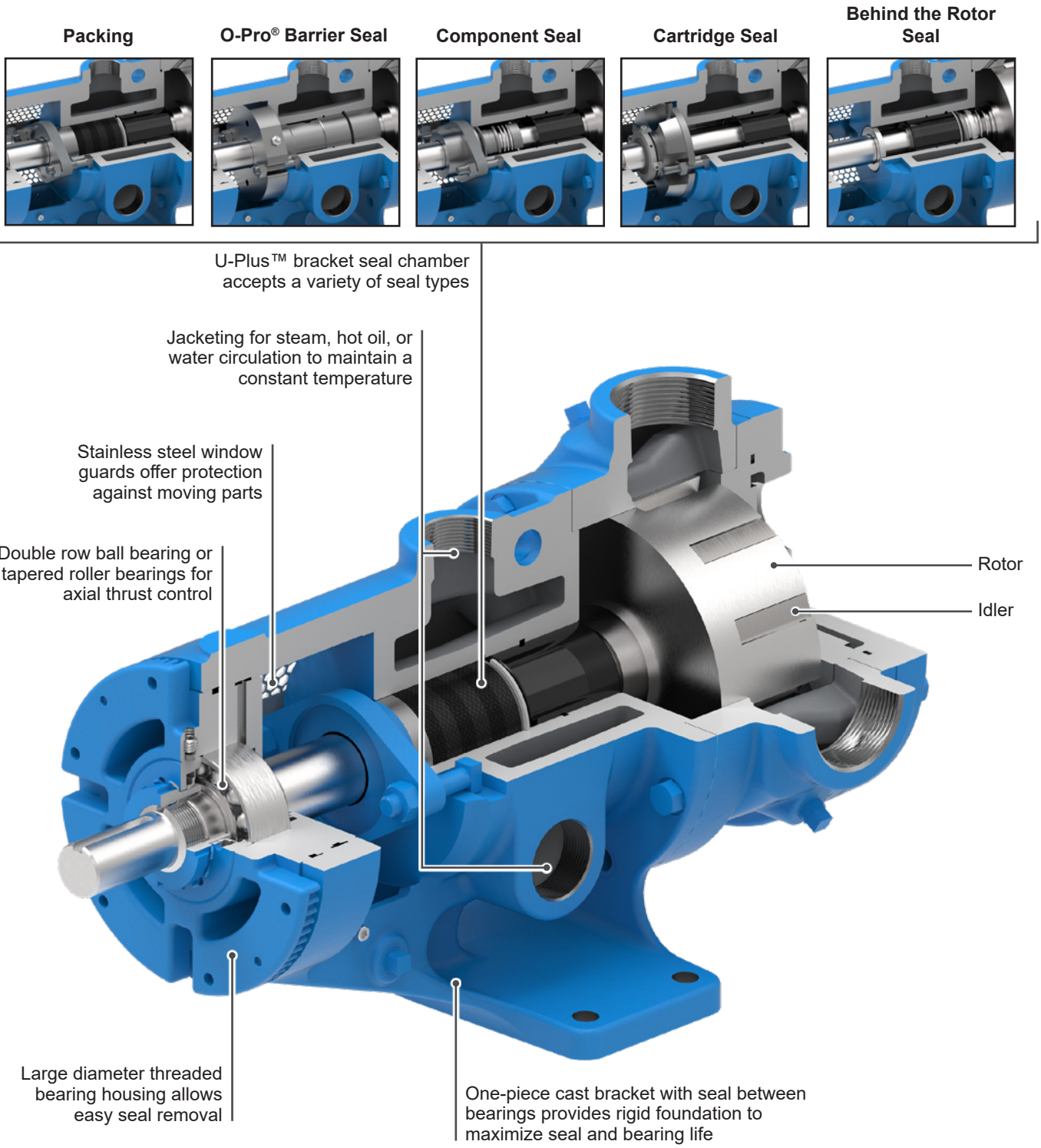

CUTAWAY VIEW & PUMP FEATURES *(324A SERIES™, 1324A SERIES™, 4324A SERIES™)*

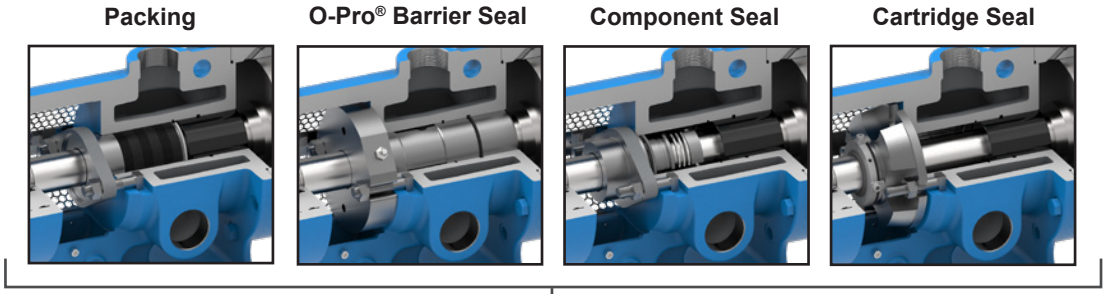

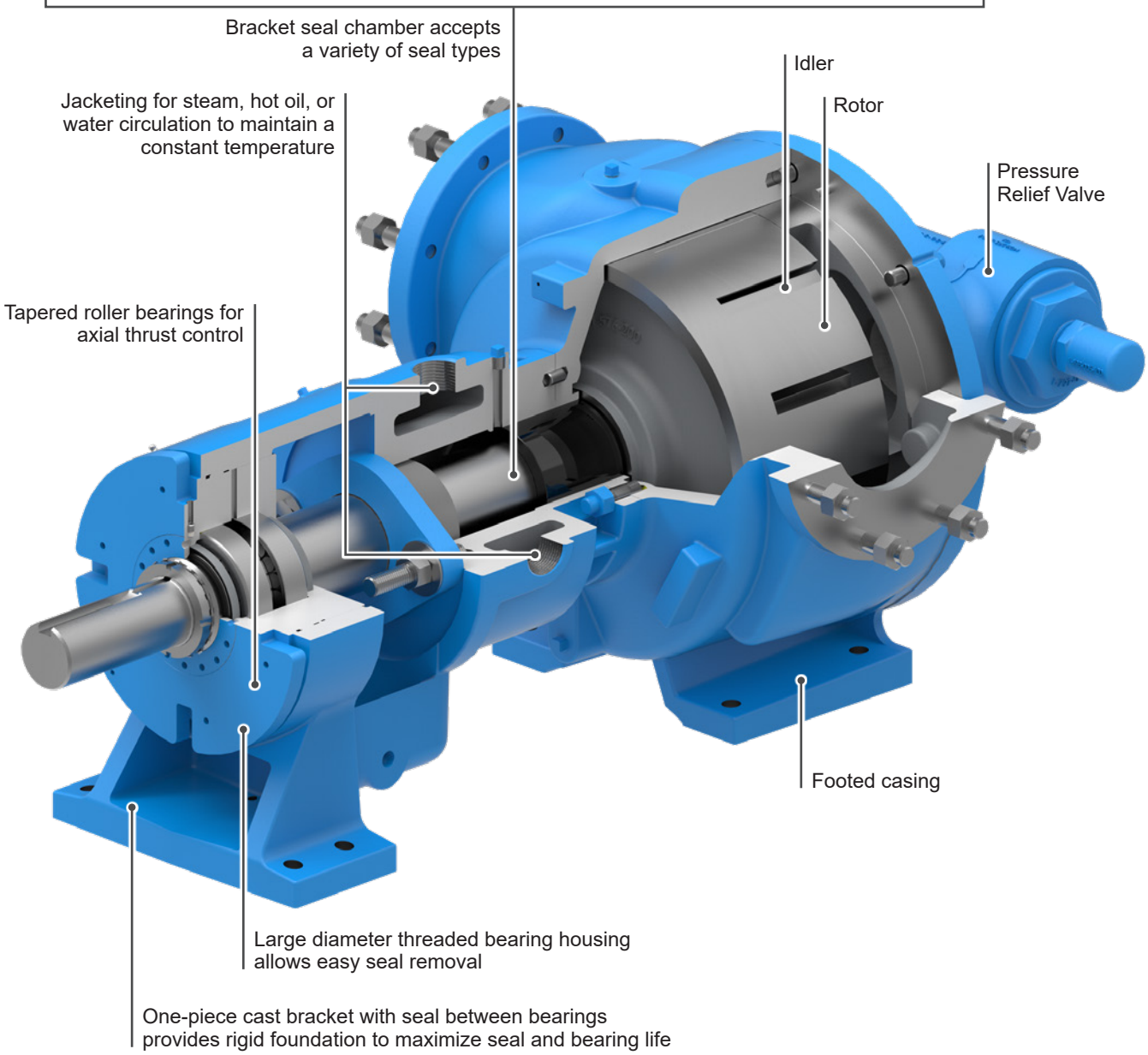

UNIVERSAL PRODUCT LINE:
CAST IRON — JACKETED PUMPS
224C Series™, 1224C Series™, 4224C Series™, 224A Series™, 4224A Series™, 324A Series™, 1324A Series™, 4324A Series™

MODEL NUMBER KEY

L S 4 2 2 4 C

Size:
H LL N
HL LS R
K Q RS
KK QS
L M

Shaft Seal:
1 = O-Pro® Seal
4 = Mechanical Seal
Blank = Packing

Basic Series Configuration

Material of Construction:
4 = Cast Iron

Bracket Type:
A = Universal Bracket for Stuffing Box Seals
C = U-Plus™ Bracket for Stuffing Box or Behind the Rotor Seals

Jacketing:
2 = Jacketed
3* = Foot Mount Casing w/ Jacketed Bracket

*** Only the N through RS sizes are foot mount with jacketed bracket (3).**

STANDARD MATERIALS OF CONSTRUCTION

Component	Standard Material	
Casing	**Standard**	Cast Iron, ASTM A48, Class 35B
	Optional ProPort™ Casing	Cast Iron, ASTM A48, Class 35B
Bolt-on Ports	Cast Iron, ASTM A48, Class 35B	
Head	Cast Iron, ASTM A48, Class 35B	
Head Plate	Cast Iron, ASTM A48, Class 35B	
Bracket	Cast Iron, ASTM A48, Class 35B	
Idler	**Standard**	① Cast Iron, ASTM A48, Class 35B
	Steel Fitted	①② Cast Iron, ASTM A48, Class 35B
Rotor	**Standard**	③ Cast Iron, ASTM A48, Class 35B
	Steel Fitted	④ Steel, ASTM A148, Grade 80-40
Shaft	**(224C Series™, 4224C Series™, 224A Series™, 4224A Series™)**	⑤ High Strength Steel, ASTM A434, Grade 4140, Class BC
	(1224C Series™, 1324A Series™)	Hardened High Strength Steel, ASTM A434, Grade 4140, Class BC
	(324A Series™, 4324A Series™)	Steel, ASTM A108, Grade 1045
Idler Pin	Hardened Steel, ASTM A108, Grade 1045	
Idler Bushing	**(4224C Series™, 4224A Series™, 4324A Series™)**	Carbon Graphite
	(1224C Series™, 1324A Series™)	Hardened Cast Iron
	(224C Series™, 224A Series™, 324A Series™)	Bronze, ASTM B584 (B505), Alloy C93700
Bracket Bushing *(Note: not applicable on 1224C Series™ or 1324A Series™)*	**(4224C Series™, 4224A Series™, 4324A Series™)**	Carbon Graphite
	(224C Series™, 224A Series™, 324A Series™)	Bronze, ASTM B584 (B505), Alloy C93700
Pressure Relief Valve	⑥ Cast Iron, ASTM A48, Class 35B	
Standard Packing (224C Series™, 224A Series™, 324A Series™)	Braided PTFE	
O-Pro® Barrier Seal (1224C Series™, 1324A Series™)	Hardened Cast Iron, Sanitary FKM Elastomers	
Standard Mechanical Seal (4224C Series™, 4224A Series™, 4324A Series™)	Carbon vs. Silicon Carbide Faces, FKM Elastomers	
Optional Abrasive Liquid Seal (4224C Series™)	Silicon Carbide vs. Silicon Carbide Faces, FKM Elastomers	

① H and HL sizes have a powdered metal idler: Powdered Metal MPIF 35, FC-0208-50

② Q and QS sizes have a steel idler when pump is steel fitted: ASTM A148 Grade 80-40.

③ KK, LS, QS, N and RS sizes have ductile iron rotor: ASTM A536 Grade 60-40-18.

④ Material specification for HL steel rotor is AISI 8620, LS steel rotor is ASTM A148 80-50.

⑤ Q, QS and M sizes are steel, ASTM A108, Grade 1045

⑥ RS relief valve not available. Contact factory for options.

SPECIAL MATERIALS & OPTIONS SELECTION GUIDELINES

For High Viscosities - Above 2,500 SSU (550 cSt)

- Steel fitted construction recommended above the following viscosities, according to pump size:

Viscosity	Pump Size												
	H	HL	K	KK	L	LL	LS	Q	QS	M	N	R	RS
SSU	25,000	7,500	25,000	75,000	25,000	2,500	75,000	7,500	75,000	25,000	75,000	25,000	75,000
cSt	5,500	1,700	5,500	17,000	5,500	550	17,000	1,700	17,000	5,500	17,000	5,500	17,000

- Extra clearances, depending on viscosity. Contact factory for clearance specifications.
- Special Sealing:
  Fluoroelastomer (FKM) Type 1 component seals good up to 15,000 SSU (3,300 cSt).
  PTFE Type 9 seals good up to 25,000 SSU (5,500 cSt).
  Packed gland good up to 2,000,000 SSU (440,000 cSt).
  Cartridge triple lip seals available to 2,000,000 SSU (440,000 cSt).
- Larger ports may be required depending on suction conditions.
- Pump should be operated at slower than normal speeds, which may require a larger pump.
- For viscosities over 250,000 SSU (55,000 cSt), contact factory for additional pump construction and operation recommendations.

For low viscosities or non-lubricating liquids – Below 100 SSU (20 cSt)

- Carbon graphite bushings.
- Pump should be operated at slower than normal speeds, which may require a larger pump.
- O-Pro® seals are not recommended for viscosities less than 100 SSU (20 cSt)

For high temperatures – Above 225° F (107°C)

- High temperature elastomers – Buna up to 225°F (105°C); FKM up to 350°F (175°C); PTFE up to 450°F (230°C); FFKM up to 550°F (290°C); Grafoil up to 700°F. (370°C). High temp packing in excess of 500°F (260°C).
- High temperature bushings recommended depending on temperature, size and specific material. See ESB-3 for recommendations.
- Additional operating clearances may be required depending on temperature, size and specific material. See ES-2 for recommendations.
- For temperatures above 450°F (230°C), special materials and sealing requirements may be needed. Contact factory for recommendations.
- Pump should be operated at slower than normal speeds, which may require a larger pump.

For abrasive or dirty liquids

- If possible, filter or strain out the abrasives present.
- Wear resistant bushings - hardened cast iron, tungsten carbide or Colmonoy coated.
- Abrasive-resistant idler pin - tungsten carbide or Colmonoy plus TC filler coated pins.
- Hardened or hard-coated shafting.
- Abrasive-resistant seals.
- For high concentrations of abrasives or particle sizes greater than 250 microns (0.010 in), contact factory for recommendations.
- Pump should be operated at slower than normal speeds, which may require a larger pump.
- Consult factory for specific recommendations.

UNIVERSAL PRODUCT LINE:
CAST IRON — JACKETED PUMPS
224C Series™, 1224C Series™, 4224C Series™, 224A Series™, 4224A Series™, 324A Series™, 1324A Series™, 4324A Series™

SPECIFICATIONS

Model Number	③ Standard Port Size	Nominal Pump Rating (100 SSU & below)			Max. Hydrostatic Pressure ④		① Maximum Discharge Pressure		Max. Recommended Temp. for Standard Pump		Approx. Shipping Weight with Valve	
	Inches	GPM	m^3/h	RPM	PSIG	BAR	PSIG	BAR	°F	°C	Lbs.	Kg.
H224C	1 ½	15	3.5	1750	400	28	200	14	450	230	40	18
H1224C	1 ½	8	1.8	1000	400	28	200	14	350	175	42	19
H4224C	1 ½	15	3.5	1750	400	28	200	14	450	230	40	18
HL224C	1 ½	30	7	1750	400	28	200	14	450	230	42	19
HL1224C	1 ½	18	4	1000	400	28	200	14	350	175	44	20
HL4224C	1 ½	30	7	1750	400	28	200	14	450	230	41	19
K224C	2	80	18	780	400	28	200	14	450	230	113	51
K1224C	2	80	18	780	400	28	200	14	350	175	117	53
K4224C	2	80	18	780	400	28	200	14	450	230	113	51
KK224C	2	100	23	780	400	28	200	14	450	230	114	52
KK1224C	2	100	23	780	400	28	200	14	350	175	118	54
KK4224C	2	100	23	780	400	28	200	14	450	230	114	52
L224C	2	135	31	640	400	28	200	14	450	230	180	82
L1224C	2	135	31	640	400	28	200	14	350	175	184	84
L4224C	2	135	31	640	400	28	200	14	450	230	180	82
LL224C	3	140	32	520	300	21	200	14	450	230	204	93
LL1224C	3	140	32	520	300	21	200	14	350	175	208	95
LL4224C	3	140	32	520	300	21	200	14	450	230	204	93
LS224C	3	200	45	640	300	21	200	14	450	230	231	105
LS1224C	3	200	45	640	300	21	200	14	350	175	235	107
LS4224C	3	200	45	640	300	21	200	14	450	230	231	105
Q224C	4	300	68	520	250	17	200	14	450	230	468	212
Q1224C	4	275	62	470	250	17	200	14	350	175	476	216
Q4224C	4	300	68	520	250	17	200	14	450	230	468	212
QS224C	6	500	114	520	250	17	200	14	450	230	511	232
QS1224C	6	400	91	470	250	17	200	14	350	175	519	235
QS4224C	6	500	114	520	250	17	200	14	450	230	511	232
M224A	4	420	95	420	250	17	200	14	450	230	696	316
M4224A	4	420	95	420	250	17	200	14	450	230	696	316
N324A	6	600	136	350	250	17	200	14	② 450	② 230	924	419
N1324A	6	550	125	330	250	17	200	14	350	175	928	421
N4324A	6	600	136	350	250	17	200	14	② 450	② 230	924	419
R324A	8	1,100	250	280	250	17	200	14	② 450	② 230	1761	800
R1324A	8	1,000	227	260	250	17	200	14	350	175	1766	802
R4324A	8	1,100	250	280	250	17	200	14	② 450	② 230	1762	800
RS324A	10	1,600	364	280	250	17	125	9	② 450	② 230	2013	914
RS1324A	10	1,500	340	260	250	17	125	9	350	175	2018	916
RS4324A	10	1,600	364	280	250	17	125	9	② 450	② 230	2013	914

① For maximum recommended discharge pressures at different viscosities, see performance curves, which can be electronically generated with the Viking Pump Curve Generator, located on www.vikingpump.com. If suction pressure exceeds 50 PSIG, consult factory. Higher pressures possible with factory approval based on application details.

② Extra clearances are required above 225°F / 105°C. Higher temperatures can be handled with special construction, consult factory

③ Ports are tapped for standard (NPT) pipe on sizes H through L. Other thread standards available. Sizes LL through RS have flange ports suitable for use with Class 125 ANSI cast iron companion flanges or flanged fittings.
G through Q & M are standard with ports at 90°
QS, N, R and RS are standard with ports at 180° (opposite)

④ Maximum hydrostatic pressure for standard pump construction. Rating is dependent on seal, gaskets and ports.

PORT OPTIONS FOR OPTIONAL PROPORT™ CASING

Port Options	Pump Sizes								
	H	HL	K	KK	L	LL	LS	Q	QS
1.5" NPT	✓ **	✓ **							
2" NPT			✓	✓	✓				
1.5" Class 125 ①	✓	✓							
1.5" Class 250 ②	✓	✓							
2" Class 125 ①	✓	✓	✓	✓					
2" Class 250 ②	✓	✓	✓	✓					
2.5" Class 125 ①					✓				
2.5" Class 250 ②					✓				
3" Class 125 ①			✓	✓	✓	✓	✓		
3" Class 250 ②			✓	✓	✓	✓	✓		
4" Class 125 ①			✓	✓	✓	✓	✓	✓ ③	
4" Class 250 ②					✓	✓	✓	✓ ③	
6" Class 125 ①								✓ ④	✓
6" Class 250 ②								✓ ④	✓
DIN 32 PN16 *	✓	✓							
DIN 40 PN16 *	✓	✓							
DIN 50 PN16 *			✓	✓					
DIN 65 PN16 *			✓	✓	✓	✓			
DIN 80 PN16 *			✓	✓	✓	✓	✓		
DIN 100 PN16 *					✓	✓	✓		
DIN 150 PN16 *								✓	✓

✓ = Available Port Option

① = Ports are suitable for use with Class 125 cast iron and Class 150 steel or stainless steel companion flanges or flanged fittings.

② = Ports are suitable for use with Class 250 cast iron and Class 300 steel or stainless steel companion flanges or flanged fittings

③ = Not suitable for use with opposite port Q casing.

④ = Not suitable for use with 90° Q casing.

* Ports are suitable for use with DIN PN16 steel or stainless steel companion flanges or flanged fittings

** Please note dimensional difference when replacing legacy product.

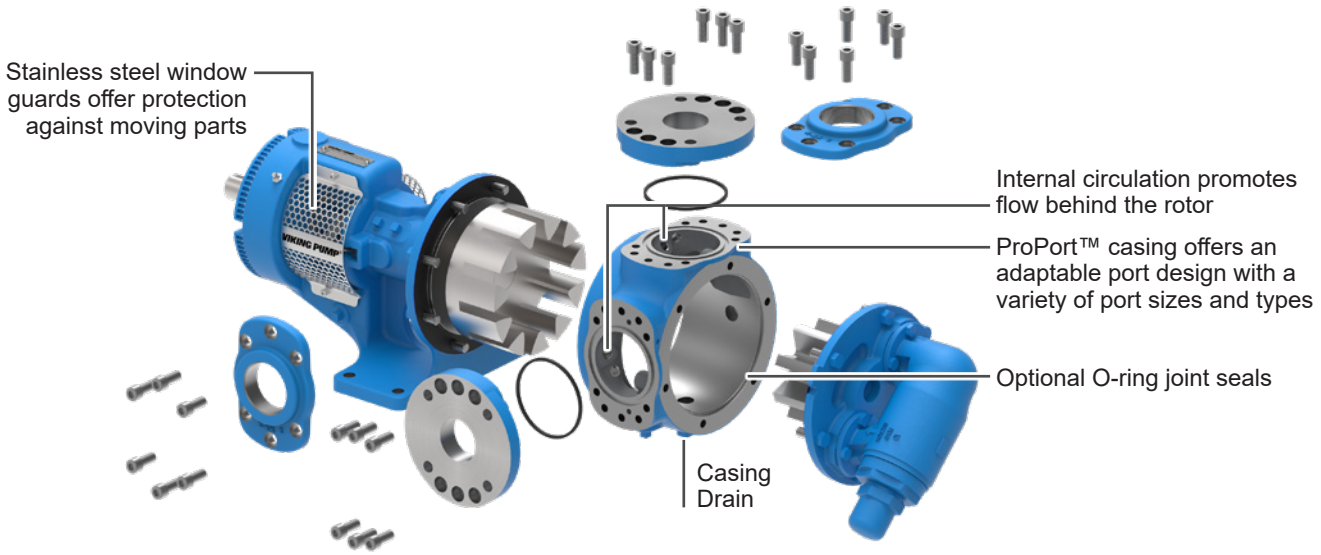

UNIVERSAL PRODUCT LINE:
CAST IRON — JACKETED PUMPS
224C Series™, 1224C Series™, 4224C Series™,
224A Series™, 4224A Series™, 324A Series™, 1324A Series™, 4324A Series™

DIMENSIONS – H THROUGH Q SIZES

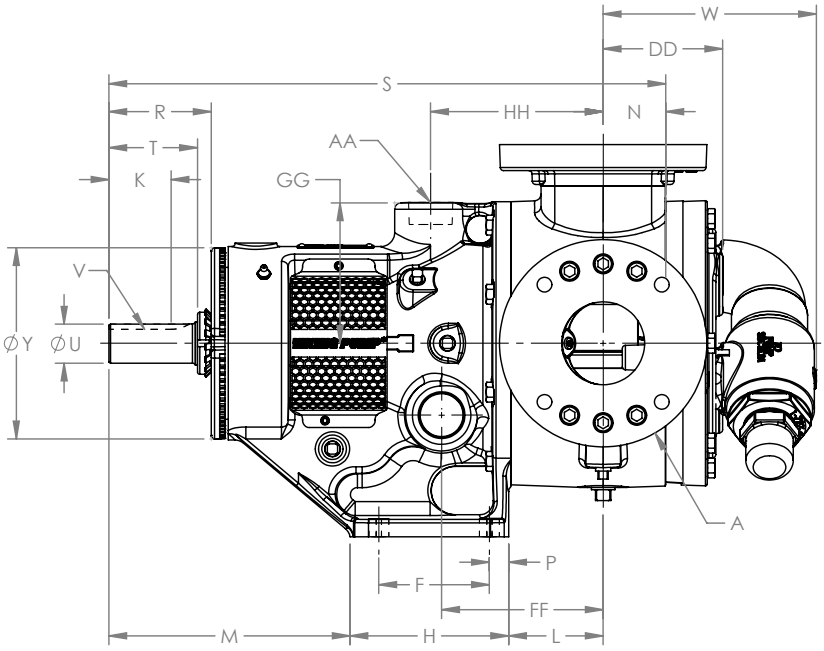

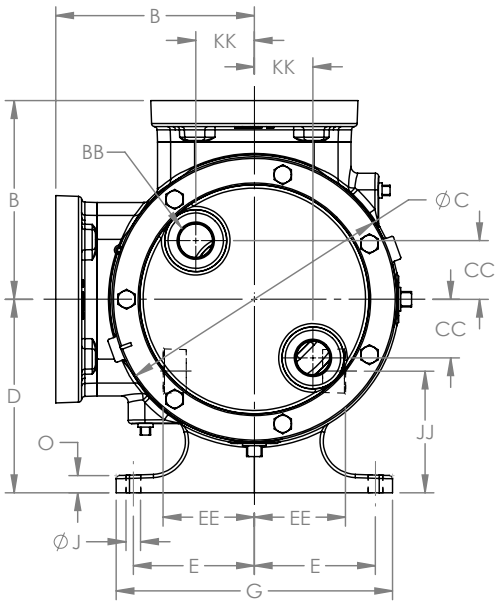

These dimensions are average and not for construction purposes. Certified prints on request.

NOTE: Dimensions “S” through “KK” on next page.

Model Number			① A (in)		B	C	D	E	②③ F	G	H	J	K	L	M	N	O	②③ P	R
Packed	O-Pro® Seal	Mechanical Seal																	
H224C HL224C	H1224C HL1224C	H4224C HL4224C	1.5	in	3.00	4.75	3.50	2.75	2.25	6.75	3.50	0.47	0.99	3.38	5.19	1.19	0.56	0.62	2.20
				mm	76	121	89	70	57	171	89	12	25	86	132	30	14	16	56
K224C KK224C	K1224C KK1224C	K4224C KK4224C	2	in	5.12	8.00	5.50	4.00	2.75	9.25	4.00	0.53	1.42	3.00	9.38	1.75	0.62	0.62	2.84
				mm	130	203	140	102	70	235	102	13	36	76	238	44	16	16	72
L224C	L1224C	L4224C	2	in	6.50	10.25	7.00	4.38	4.00	10.00	5.38	0.53	2.25	3.58	8.89	1.75	0.62	0.62	3.70
				mm	165	260	178	111	102	254	137	13	57	91	226	44	16	16	94
LL224C	LL1224C	LL4224C	3	in	7.19	10.25	7.00	4.38	4.00	10.00	5.38	0.53	2.25	3.58	8.89	2.25	0.62	0.62	3.70
				mm	183	260	178	111	102	254	137	13	57	91	226	57	16	16	94
LS224C	LS1224C	LS4224C	3	in	7.19	10.25	7.00	4.38	4.00	10.00	5.38	0.53	2.55	4.75	9.12	2.44	0.62	0.62	3.90
				mm	183	260	178	111	102	254	137	13	65	121	232	62	16	16	99
Q224C	Q1224C	Q4224C	4	in	8.25	14.00	8.75	4.12	4.00	10.00	6.00	0.69	3.58	6.62	7.00	7.62	0.75	1.00	6.62
				mm	210	356	222	105	102	254	152	18	91	168	178	194	19	25	168

① Unless otherwise noted, ports are suitable for class 125 ANSI iron companion flanges or flanged fittings..

② H-HL bracket foot has slotted foot mounting holes. Dimension F = 1.65-2.38 [42-60] and dimension P = 0.52-0.65 [13-16].

③ L-LL-LS bracket foot has slotted foot mounting holes. Dimension F = 3.81-4.19 [81-106] and dimension P = 0.45-0.64 [12-16].

DIMENSIONS – H THROUGH Q SIZES *(CONTINUED)*

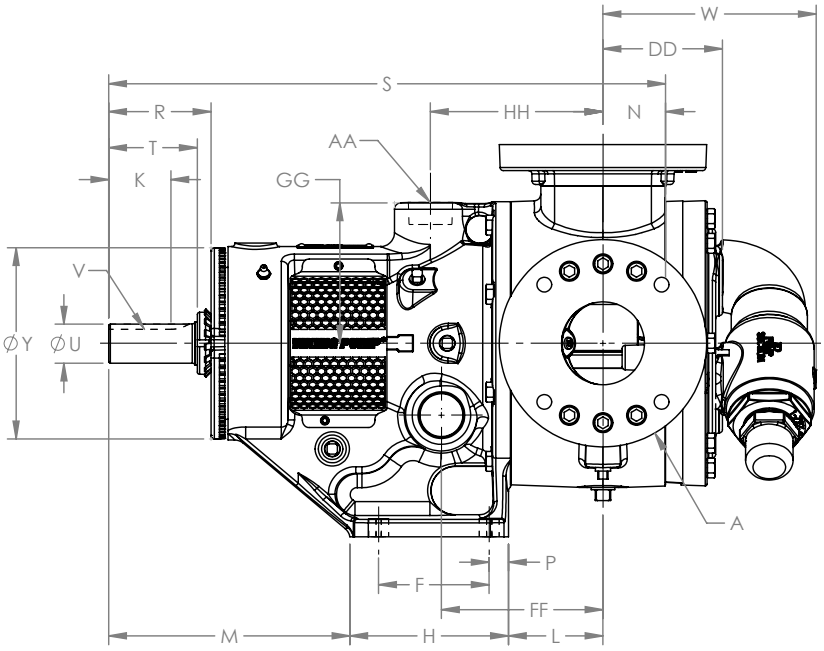

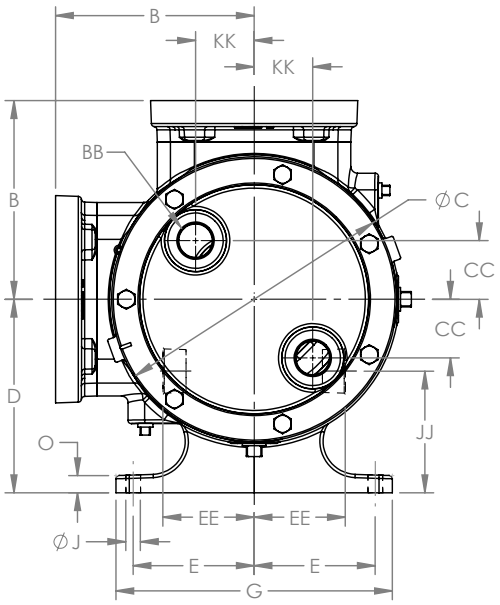

These dimensions are average and not for construction purposes. Certified prints on request.

NOTE: Dimensions “A” through “R” on previous page.

Model Number				S	T	U (in)	V (in)	W*	Y	AA (in)	BB (in)	CC	DD	EE	FF	GG	HH	JJ	KK
Packed	O-Pro® Seal	Mechanical Seal																	
H224C HL224C	H1224C HL1224C	H4224C HL4224C	in	13.25	1.62	0.75	.19 x .09	4.04	1.83	0.75	0.50	0.94	2.41	5.75	2.30	5.75	5.75	5.75	2.30
			mm	337	41			103	47			24	61	146	58	146	146	146	58
K224C KK224C	K1224C KK1224C	K4224C KK4224C	in	18.13	2.25	1.12	.25 x .12	7.00	2.75	1.25	1.25	1.75	3.25	6.75	2.92	6.75	6.75	6.75	2.92
			mm	461	57			178	70			44	83	171	74	171	171	171	74
L224C	L1224C	L4224C	in	19.63	2.25	1.44	.38 x .19	7.18	3.25	1.25	1.00	3.00	3.81	6.75	2.93	6.75	6.75	6.75	2.93
			mm	499	57			182	83			76	97	171	74	171	171	171	74
LL224C	LL1224C	LL4224C	in	20.12	2.25	1.44	.38 x .19	7.18	3.25	1.25	1.00	3.00	4.31	6.75	2.93	6.75	6.75	6.75	2.93
			mm	511	57			182	83			76	110	171	74	171	171	171	74
LS224C	LS1224C	LS4224C	in	21.69	3.50	1.44	.38 x .19	7.72	3.30	1.25	1.00	3.00	4.50	7.00	4.03	7.00	7.00	7.00	4.03
			mm	551	89			196	84			76	114	178	102	178	178	178	102
Q224C	Q1224C	Q4224C	in	26.75	4.50	1.94	.50 x .25	11.25	4.50	1.50	1.25	---	4.57	8.38	5.35	8.38	8.38	8.38	5.35
			mm	679	114			286	114			---	116	213	136	213	213	213	136

UNIVERSAL PRODUCT LINE:
CAST IRON — JACKETED PUMPS
224C Series™, 1224C Series™, 4224C Series™,
224A Series™, 4224A Series™, 324A Series™, 1324A Series™, 4324A Series™

DIMENSIONS – QS SIZE

Dimensions shown in inches with millimeter equivalent shown in parentheses

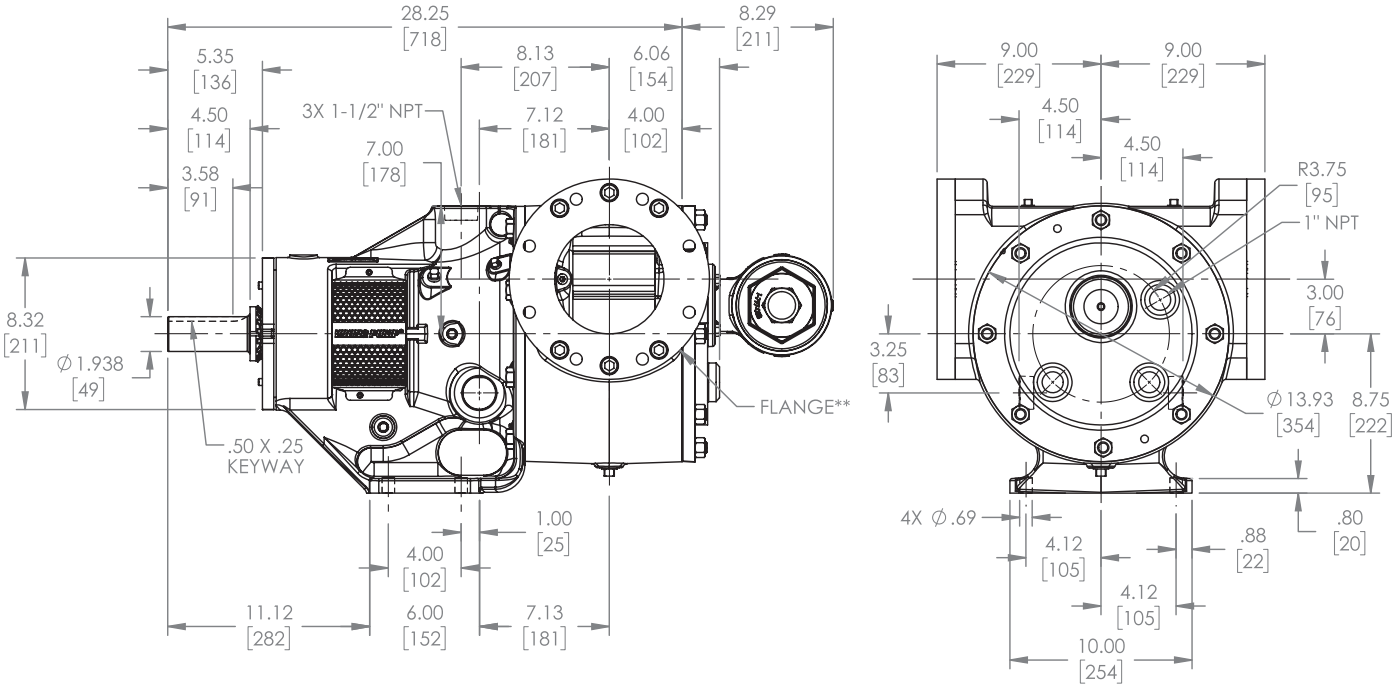

Model Number			BB*	DD	GG
Packed	O-Pro® Seal	Mechanical Seal			
QS224C	QS1224C	QS4224C	1.25	5.57 (141)	4.12 (105)

* Ports for steam or hot oil jacketing are inch standard NPT threads.

224C/4224C ports suitable for use with Class 125 ANSI cast iron companion flanges or flanged fittings.

NOTE: Flanges are 6", suitable for use with Class 125 ANSI cast iron companion flanges or flanged fittings. They are studded, not through-bolt.

DIMENSIONS – M SIZE

Dimensions shown in inches with millimeter equivalent shown in parentheses

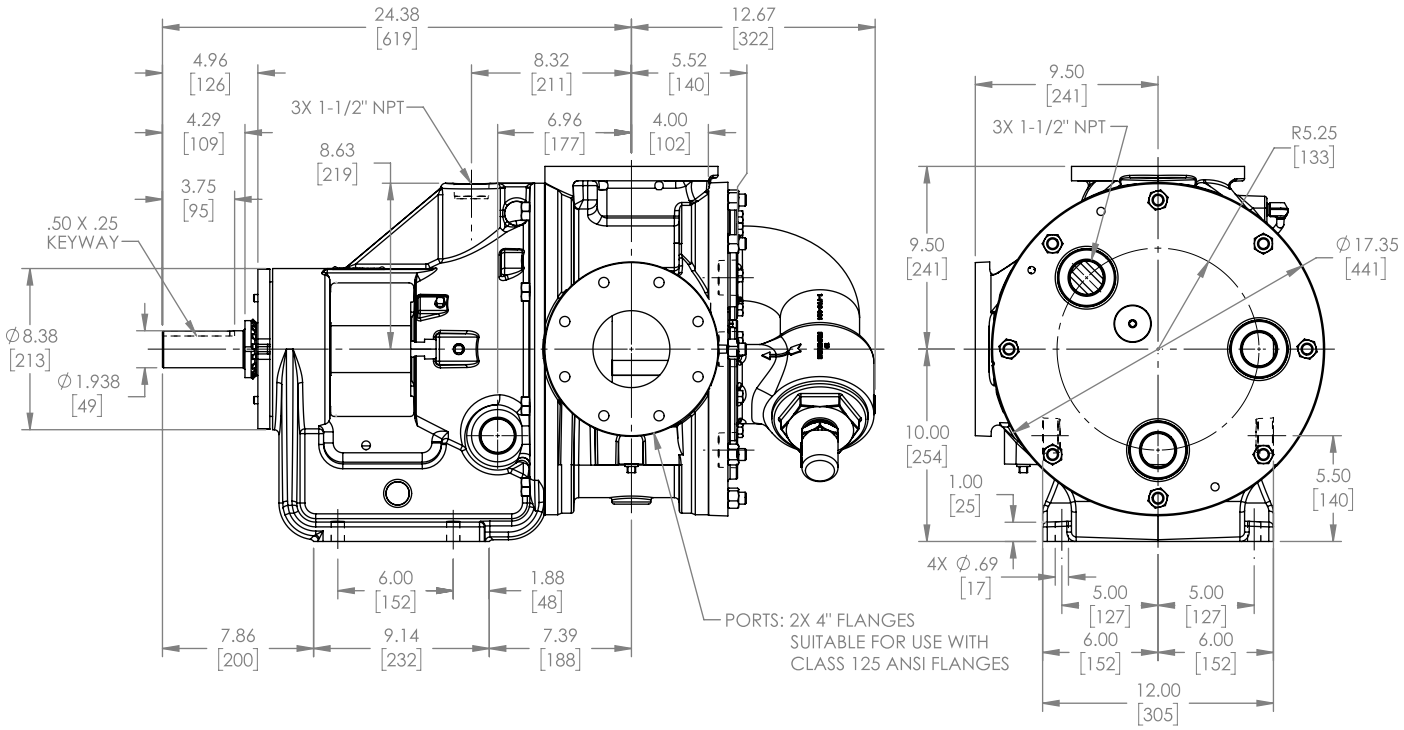

UNIVERSAL PRODUCT LINE:
CAST IRON — JACKETED PUMPS
224C Series™, 1224C Series™, 4224C Series™,
224A Series™, 4224A Series™, 324A Series™, 1324A Series™, 4324A Series™

DIMENSIONS – N, R & RS SIZES – JACKETED BRACKET *(324A, 1324A, 4324A)*

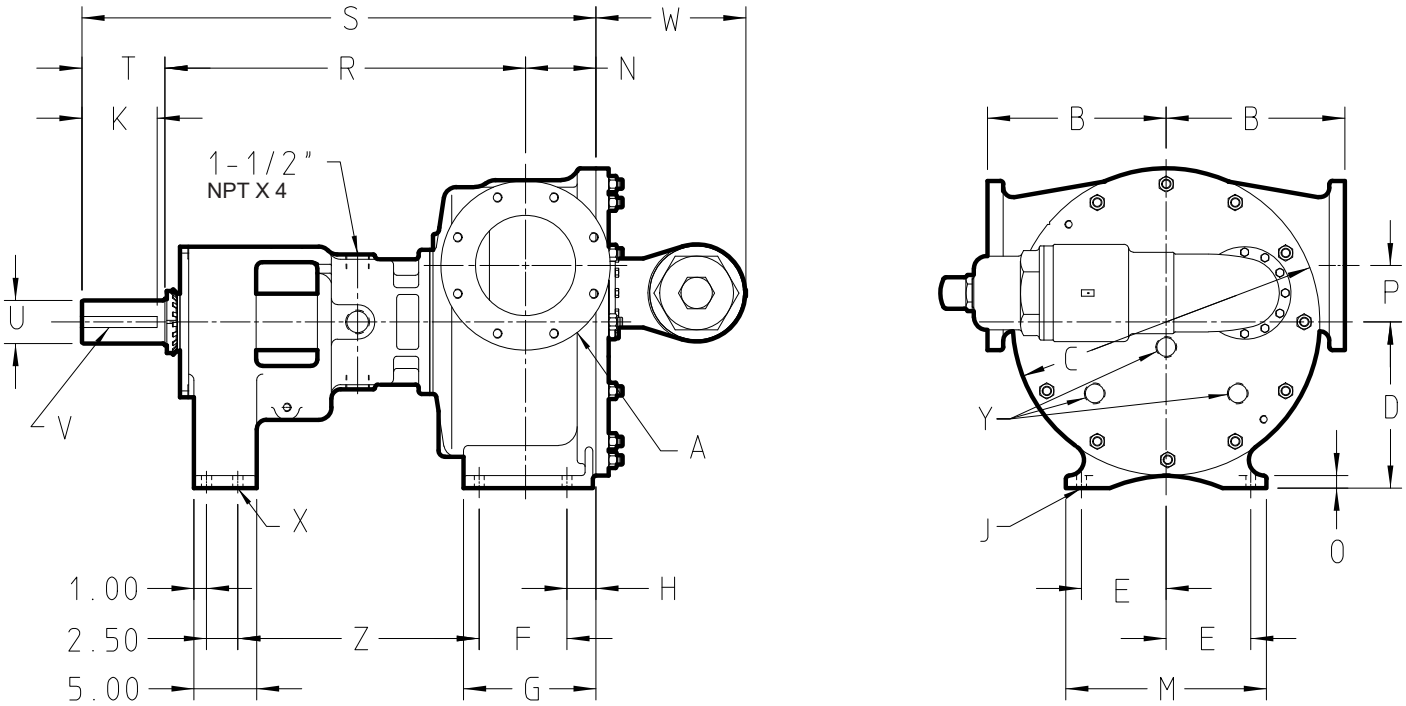

Model Number			A (in)		B	C	D	E	F	G	H	J	K	M
Packed	O-Pro® Seal	Stuffing Box Seal												
N324A	N1324A	N4324A	② 6	in	9.75	17.25	9.50	5.00	6.25	8.69	1.62	0.69	4.50	12.00
				mm	248	438	241	127	159	221	41	18	114	305
R324A	R1324A	R4324A	② 8	in	14.25	24.50	13.25	6.75	7.00	10.56	2.31	0.78	6.00	16.00
				mm	362	622	337	171	178	268	59	20	152	406
RS324A	RS1324A	RS4324A	② 10	in	14.25	24.50	13.25	6.75	7.00	13.12	4.81	0.88	6.00	16.46
				mm	362	622	337	171	178	333	122	22	152	418

Model Number				N	O	P	R	S	T	U (in)	V (in)	W	X	Y (in)	Z
Packed	O-Pro® Seal	Stuffing Box Seal													
N324A	N1324A	N4324A	in	4.50	1.00	3.00	26.00	36.50	6.00	2.44	.62 x.31	8.63	0.69	N/A	18.94
			mm	114	25	76	660	927	152			219	18		481
R324A	R1324A	R4324A	in	5.62	1.00	4.50	28.75	41.00	6.62	3.44	.88 x.44	12.00	0.69	1.25 NPT	19.25
			mm	143	25	114	730	1041	168			305	18		489
RS324A	RS1324A	RS4324A	in	8.12	1.30	4.50	28.55	43.49	6.62	3.44	.88 x.44	12.00	0.88	1.25 NPT	19.25
			mm	206	33	114	725	1105	168			305	22		489

NOTE: The N size is standard with a jacketed bracket and non-jacketed head and non-jacketed relief valve, while the "R" size is standard with a jacketed bracket, a jacketed head, and a non-jacketed relief valve. "RS" contact factory for jacketing options.

② Ports are suitable for use with Class 125 ANSI cast iron companion flanges or flanged fittings.

NPSH REQUIRED

Printed performance curves are not available.

Performance curves can be electronically generated with the Viking Pump Curve Generator on vikingpump.com.

NPSHR data is not available on the pump selector.

NPSH (Net Positive Suction Head): The $NPSH_R$ (Net Positive Suction Head Required by the pump) is given in the table below and applies for viscosities through 750 SSU. $NPSH_A$ (Net Positive Suction Head – Available in the system) must be greater than the $NPSH_R$. For a complete explanation of NPSH, see Application Data Sheet AD-19.

FOR VISCOSITIES UP TO 750 SSU – See $NPSH_R$ table below.

$NPSH_R$ for high viscosities can be estimated using the following method:

1. Calculate line loss for a 1 foot long pipe of a diameter matching the pump inlet port size. Use your flow rate and max viscosity.

2. Convert this value into Feet of Liquid (S.G. 1.0)

3. Add this value to the $NPSH_R$ value in the chart below.

$NPSH_R$ – FEET OF LIQUID (Specific Gravity 1.0), Viscosities up to 750 SSU

PUMP SIZE	PUMPS SPEED, RPM														
	100	125	155	190	230	280	350	420	520	640	780	950	1150	1450	1750
H, HL	—	—	—	—	1.7	1.8	1.9	2.1	2.4	2.8	3.4	4.5	6.2	9.5	13.5
K, KK	—	1.7	1.8	1.9	2.1	2.3	2.8	3.3	4.4	6.3	9.1	—	—	—	—
L	1.6	1.8	2.0	2.2	2.5	3.0	3.8	5.0	7.3	10.8	—	—	—	—	—
LL	1.6	1.8	2.0	2.2	2.5	3.0	3.8	5.0	7.3	—	—	—	—	—	—
LS	1.6	1.8	2.0	2.2	2.5	3.0	3.8	5.0	7.3	10.8	—	—	—	—	—
Q, QS	1.9	2.1	2.3	2.7	3.3	4.2	6.1	8.4	12.7	—	—	—	—	—	—
M	2.1	2.3	2.8	3.4	4.3	6.0	9.0	12.7	—	—	—	—	—	—	—
N	2.1	2.3	3.5	4.5	6.3	9.5	15.0	—	—	—	—	—	—	—	—
R	6.1	7.1	8.3	10.1	12.1	15.2	—	—	—	—	—	—	—	—	—
RS	7.0	8.5	10.4	13.1	17.2	22.4	—	—	—	—	—	—	—	—	—