UNIVERSAL PRODUCT LINE:
CAST IRON — NON-JACKETED PUMPS
124C Series™, 1124C Series™, 4124C Series™,
124A Series™, 4124A Series™, 4124B Series™, 324A Series™, 1324A Series™, 4324A Series™

Section	2401
Page	2401.1
Issue	C

TABLE OF CONTENTS

Related Products 1
Operating Range 1
Series Description 1
Features & Benefits 2
Port Location Options 2
Model Number Key 2
Standard Materials of Construction 3
Cutaway View & Pump Features *(124C Series™, 1124C Series™, 4124C Series™, 124A Series™, 4124A Series™, 4124B Series™)* 4
Cutaway View & Pump Features *(324A Series™, 1324A Series™, 4324A Series™)* 5
Special Materials & Options Selection Guidelines 6
Specifications – G, H, HL, AK, AL, K, KK, L Sizes 7
Specifications – LL, LS, Q, QS, M, N, R, RS Sizes 8
Port Options for Optional ProPort™ Casing 9
Dimensions – G Size 10
Dimensions – H, HL, AK, AL, K, KK, L, LL, LS, Q Sizes 11
Dimensions – H, HL, AK, AL, K, KK, L, LL, LS, Q Sizes *(Cont'd)* 12
Dimensions – QS Size 13
Dimensions – M Size 14
Dimensions – N, R, RS Sizes – Jacketed Bracket *(324A Series™, 1324A Series™, 4324A Series™)* 15
NPSH Required 16

RELATED PRODUCTS

Cast Iron, Jacketed Pumps: Catalog Section 2402

Cast Iron, Mag Drive Pumps: Catalog Section 1403

Steel Externals, Non-Jacketed Pumps: Catalog Section 2301

Stainless Steel, Non-Jacketed Pumps: Catalog Section 2701

SERIES DESCRIPTION

124C Series™, 1124C Series™, 4124C Series™:

The Universal Product Line for Viking Pump offers the most extensive range of sealing options among all Viking Pump Models. Designed with the innovative U-Plus™ bracket design, these pumps accommodate a wide variety of sealing configurations - including component seals (used in the stuffing box or behind the rotor), packing, cartridge seals, and Viking Pumps proprietary O-Pro® seals.

As Viking's most versatile internal gear pump series, these models support a broad selection of design and material options. They are also compatible with Viking's ProPort™ casing, which offers multiple flange types and sizes, along with both 90-degree and opposite port arrangements - providing enhanced flexibility for system integration and piping connections.

324A Series™, 1324A Series™, 4324A Series™

Viking's largest offerings within the Universal Product Line are engineered for high-capacity performance and exceptional versatility. These pumps support a wide range of sealing options, including component and cartridge mechanical seals, traditional packing, and Viking's patented O-Pro® seal technology. Each unit comes standard with a jacketed bracket for enhanced thermal control, with an optional jacketed head available to meet more demanding process requirements.



H124C



KK1124C

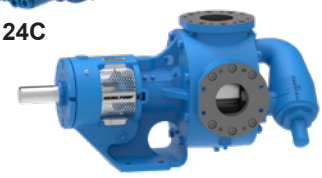

Q124C

OPERATING RANGE

SERIES	NOMINAL FLOW		MAXIMUM PRESSURE		TEMPERATURE RANGE		VISCOSITY RANGE	
	GPM	m^3h	PSI	Bar	°F	°C	SSU	cSt
124C Series™	15 - 500	3.5 - 114	200	14	−60 to +450	−50 to +230	28 to 2,000,000	0.1 to 440,000
1124C Series™	8 - 400	1.8 - 91	200	14	0 to +350	−15 to +175	100 to 2,000,000	20 to 440,000
4124C Series™	15 - 500	3.5 - 114	200	14	−60 to +450	−50 to +230	28 to 2,000,000	0.1 to 440,000
124A Series™	8 - 420	1.8 - 95	200	14	−60 to +450	−50 to +230	28 to 2,000,000	0.1 to 440,000
4124A Series™	8 - 420	1.8 - 95	200	14	−60 to +450	−50 to +230	28 to 2,000,000	0.1 to 440,000
324A Series™	600 - 1,600	136 - 364	200	14	−60 to +450	−50 to +230	28 to 2,000,000	0.1 to 440,000
1324A Series™	550 - 1,500	125 - 340	200	14	0 to +350	−15 to +175	100 to 75,000 *	20 to 17,000 *
4324A Series™	600 - 1,600	136 - 364	200	14	−60 to +450	−50 to +230	28 to 2,000,000	0.1 to 440,000

* Consult factory for viscosities exceeding the stated operating range

Section	2401
Page	2401.2
Issue	C

UNIVERSAL PRODUCT LINE:
CAST IRON — NON-JACKETED PUMPS
124C Series™, 1124C Series™, 4124C Series™,
124A Series™, 4124A Series™, 4124B Series™, 324A Series™, 1324A Series™, 4324A Series™

FEATURES & BENEFITS

- Positive Displacement Internal Gear pumping principle handles a broad range of viscosities with constant flow rate
- Optional ProPort™ Casing (124C Series™, 4124C Series™, 1124C Series™)
  - » Adaptable port design offers a variety of port sizes and types, simplifying integration into existing piping systems and enhances installation efficiency
  - » H-Q sizes are available with optional opposite porting
  - » Casing drain allows the pump to be drained without removing the head
  - » Optional O-ring joint seals for high pressure or difficult to seal applications
  - » Internal circulation promotes flow behind the rotor
- U-Plus™ Bracket (124C Series™, 4124C Series™, 1124C Series™)
  - » Seal options include packing, O-Pro® Barrier seal, single component seals (stuffing box or behind the rotor), cartridge lip seals, and single or double cartridge seals. Various seal flush plans available.
  - » Stainless steel window guards offer protection from rotating parts
- Footed one-piece iron bracket provides rigid mounting to help maintain alignment, which extends seal and bearing life
- Series designed with an enlarged bearing housing used in conjunction with a spacer coupling permits easy cartridge seal installation and removal in place without removing the head and rotor/shaft
- Axial rotor thrust is controlled by double row bearing or tapered roller bearings and bushings provide a secondary point of radial shaft support
- Rotatable bearing housing provides easy rotor end clearance adjustment to compensate for wear
- Numerous material options are available for the bushings, idler pin, shaft, rotor, idler and elastomers
- Gear and pump geometry has been optimized based on more than 100 years of experience
- Can be used with direct drive, gear reducer of gearmotor drive, or belt drive

3 YEAR LIMITED WARRANTY

For warranty details, please go to: vikingpump.com/warranty

PORT LOCATION OPTIONS

90° Port Options:

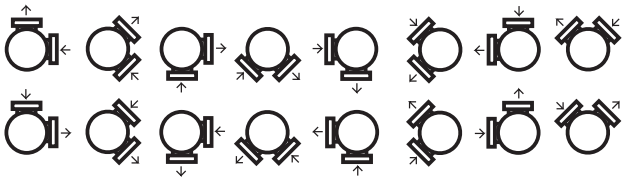

Opposite Port Options:

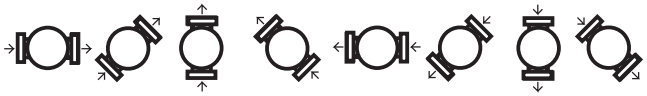

NOTE: See page 2402.9 for a complete list of port options for ProPort™ casing by size.

MODEL NUMBER KEY

L S 4 1 2 4 C

Size:

G	LL
H	LS
HL	Q
AK	QS
AL	M
K	N
KK	R
L	RS

Shaft Seal:
4 = Mechanical Seal
1 = O-Pro® Seal
Blank = Packing

Jacketing:
1 = No Jacketing
3* = Foot Mount Casing w/ Jacketed Bracket

Basic Series Configuration

Material of Construction:
4 = Cast Iron

Bracket Type:
A = Universal Bracket for Stuffing Box Seals
B = Behind the Rotor
C = U-Plus™ Bracket for Stuffing Box or Behind the Rotor Seals

* Note: Only the N, R & RS sizes are foot mount casing with jacketed bracket.

STANDARD MATERIALS OF CONSTRUCTION

Component	Standard Material	
Casing	**Standard**	Cast Iron, ASTM A48, Class 35B
	Optional ProPort™ Casing	Cast Iron, ASTM A48, Class 35B
Bolt-on Ports	Cast Iron, ASTM A48, Class 35B	
Head	Cast Iron, ASTM A48, Class 35B	
Bracket	Cast Iron, ASTM A48, Class 35B	
Idler	**Standard**	① Cast Iron, ASTM A48, Class 35B
	Steel Fitted	①② Cast Iron, ASTM A48, Class 35B
Rotor	**Standard**	③ Cast Iron, ASTM A48, Class 35B
	Steel Fitted	④ Steel, ASTM A148, Grade 80-40
Shaft	**(124C Series™, 4124C Series™, 4124A Series™, 4124B Series™)**	⑤ High Strength Steel, ASTM A434, Grade 4140, Class BC
	(1124C Series™, 1324A Series™)	Hardened High Strength Steel, ASTM A434, Grade 4140, Class BC
	(324A Series™, 4324A Series™)	Steel, ASTM A108, Grade 1045
Idler Pin	Hardened Steel, ASTM A108, Grade 1045	
Idler Bushing	**(4124C Series™, 4124A Series™, 4324A Series™, 4124B Series™)**	Carbon Graphite
	(1124C Series™, 1324A Series™)	Hardened Cast Iron
	(124C Series™, 124A Series™, 324A Series™)	Bronze, ASTM B584 (B505), Alloy C93700
Bracket Bushing (no product contact on 4124B Series™) *(Note: not applicable on 1124C Series™, or 1324A Series™)*	**(4124C Series™, 4124A Series™, 4324A Series™)**	Carbon Graphite
	(124C Series™, 124A Series™, 324A Series™, 4124B Series™)	Bronze, ASTM B584 (B505), Alloy C93700
Pressure Relief Valve	⑥ Cast Iron, ASTM A48, Class 35B	
Standard Packing (124C Series™, 124A Series™, 324A Series™)	Braided PTFE	
O-Pro® Barrier Seal (1124C Series™ or 1324A Series™)	Hardened Cast Iron, Sanitary FKM Elastomers	
Standard Mechanical Seal (4124C Series™, 4124A Series™, 4124B Series™, 4324A Series™)	Carbon vs. Silicon Carbide Faces, FKM Elastomers	
Optional Abrasive Liquid Seal (4124C Series™, 4124B Series™)	Silicon Carbide vs. Silicon Carbide Faces, FKM Elastomers	

① G, H and HL sizes have a powdered metal idler: Powdered Metal MPIF 35, FC-0208-45 (G) , Powdered Metal MPIF 35, FC-0208-50 (H, HL)

② Q and QS sizes have a hardened steel idler when pump is steel fitted: ASTM A148 Grade 80-40.

③ AK, KK, LS, QS, N and RS sizes have ductile iron rotor: ASTM A536 Grade 60-40-18.

④ Material specification for HL steel rotor is AISI 8620, LS steel rotor is ASTM A148 80-50.

⑤ Q, QS and M sizes are Steel, ASTM A108, Grade 1045

⑥ RS relief valve not available. Contact factory for options.

UNIVERSAL PRODUCT LINE:
CAST IRON — NON-JACKETED PUMPS
124C Series™, 1124C Series™, 4124C Series™,
124A Series™, 4124A Series™, 4124B Series™, 324A Series™, 1324A Series™, 4324A Series™

CUTAWAY VIEW & PUMP FEATURES (124C SERIES™, 1124C SERIES™, 4124C SERIES™, 124A SERIES™, 4124A SERIES™, 4124B SERIES™)

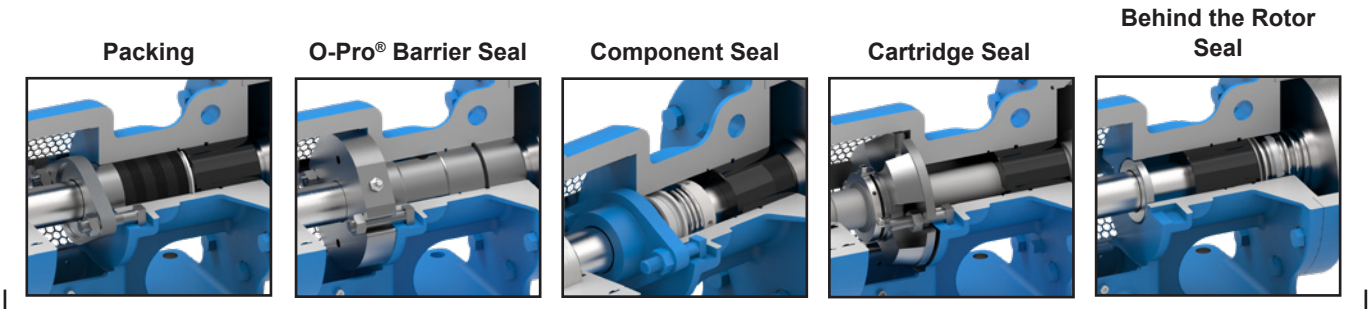

U-Plus™ bracket seal chamber accepts a variety of seal types

Internal relief valve standard*; less valve / plain head and return-to-tank relief valves optional

Multiple port sizes, types, and ratings are available including threaded or flanged (Class 125, Class 250)

Stainless steel window guards offer protection against moving parts

Double row ball bearing or tapered roller bearings for axial thrust control

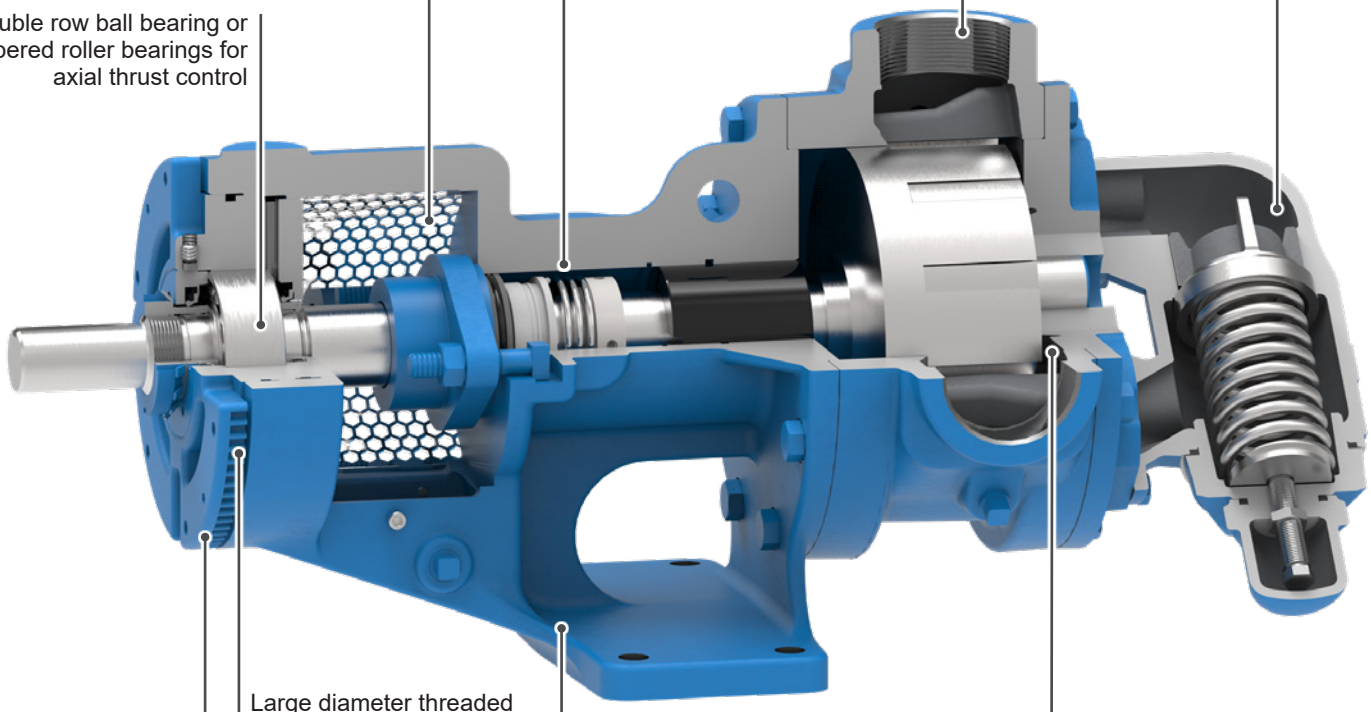

Large diameter threaded bearing housing allows easy seal removal

One-piece cast bracket with seal between bearings provides rigid foundation to maximize seal and bearing life

Rotor end clearance can be adjusted to compensate for wear or for higher temperatures or viscosities by rotating the threaded bearing housing

CUTAWAY VIEW & PUMP FEATURES (324A SERIES™, 1324A SERIES™, 4324A SERIES™)

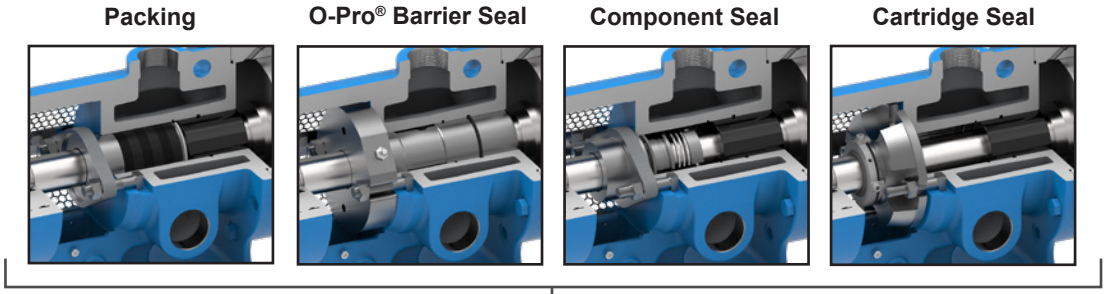

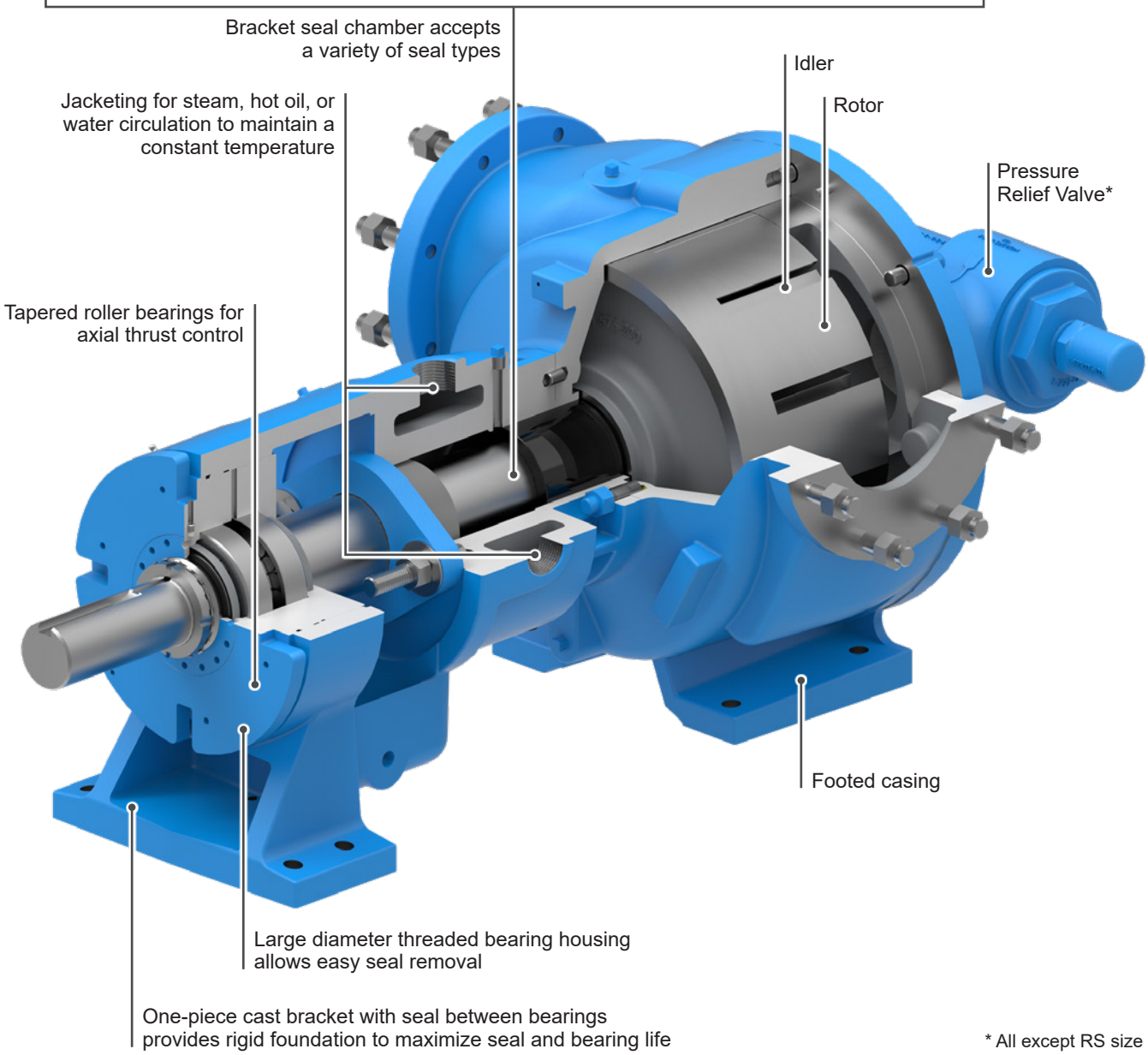

* All except RS size

UNIVERSAL PRODUCT LINE:
CAST IRON — NON-JACKETED PUMPS
124C Series™, 1124C Series™, 4124C Series™,
124A Series™, 4124A Series™, 4124B Series™, 324A Series™, 1324A Series™, 4324A Series™

SPECIAL MATERIALS & OPTIONS SELECTION GUIDELINES

For High Viscosities – Above 2,500 SSU (550 cSt)

- Steel fitted construction recommended above the following viscosities, according to pump size:

Viscosity	Pump Size															
	G	H	HL	AK	AL	K	KK	L	LL	LS	Q	QS	M	N	R	RS
SSU	7,500	25,000	7,500	25,000	25,000	25,000	75,000	25,000	2,500	75,000	7,500	75,000	25,000	75,000	25,000	75,000
cSt	1,700	5,500	1,700	5,500	5,500	5,500	17,000	5,500	550	17,000	1,700	17,000	5,500	17,000	5,500	17,000

- Extra clearances, depending on viscosity. See ES-2 for recommendations.
- Special Sealing:
  FKM or Buna N Type 1 component seals good up to 15,000 SSU (3,300 cSt).
  PTFE Type 9 seals good up to 25,000 SSU (5,500 cSt).
  O-Pro® Barrier seals good up to 2,000,000 SSU (440,000 cSt)
  Packed gland good up to 2,000,000 SSU (440,000 cSt).
  Cartridge triple lip seals available to 2,000,000 SSU (440,000 cSt).
- Larger ports may be required depending on suction conditions.
- Pump should be operated at slower than normal speeds, which may require a larger pump.
- For viscosities over 250,000 SSU (55,000 cSt), contact factory for additional pump construction and operation recommendations.

For low viscosities or non-lubricating liquids – Below 100 SSU (20 cSt)

- Carbon graphite bushings.
- Pump should be operated at slower than normal speeds, which may require a larger pump.
- O-Pro® seals are not recommended for viscosities less than 100 SSU (20 cSt)

For high temperatures – Above 225°F (105°C)

- High temperature elastomers – FKM up to 350°F (175°C); Buna up to 225°F (105°C); PTFE up to 450°F (230°C);
- High temperature bushings recommended depending on temperature, size and specific material.
  See ESB-3 for recommendations.
- Additional operating clearances may be required depending on temperature, size and specific material.
  See ES-2 for recommendations.
- For temperatures above 450°F (230°C), special materials and sealing requirements may be needed.
  Contact factory for recommendations.
- Pump should be operated at slower than normal speeds, which may require a larger pump.

For abrasive or dirty liquids

- If possible, filter or strain out the abrasives present.
- Wear resistant bushings - hardened cast iron, tungsten carbide or Colmonoy coated.
- Abrasive-resistant idler pin - tungsten carbide or Colmonoy plus TC filler coated pins.
- Hardened or hard-coated shaft.
- Abrasive-resistant seals.
- For high concentrations of abrasives or particle sizes greater than 250 microns (0.010 in), contact factory for recommendations.
- Pump should be operated at slower than normal speeds, which may require a larger pump.
- Consult factory for specific recommendations.

SPECIFICATIONS – G, H, HL, AK, AL, K, KK, L SIZES

Model Number	③ Standard NPT Port Size	Nominal Pump Rating (100 SSU & below)			④ Maximum Hydrostatic Pressure		① Maximum Discharge Pressure		② Maximum Recommended Temperature for Standard Pump		Approx. Shipping Weight with Valve	
	Inches	GPM	m^3/h	RPM	PSIG	BAR	PSIG	BAR	°F	°C	Lbs.	Kg.
G124A	1	8	1.8	1750	400	28	200	14	450	230	20.55	9.3
G4124A	1	8	1.8	1750	400	28	200	14	350	175	21.61	9.8
G4124B	1	8	1.8	1750	400	28	200	14	350	175	20.55	9.3
H124C	1 ½	15	3.5	1750	400	28	200	14	450	230	38.62	17.5
H1124C	1 ½	8	1.8	1000	400	28	200	14	350	175	40.34	18.3
H4124C	1 ½	15	3.5	1750	400	28	200	14	350	175	38.62	17.5
HL124C	1 ½	30	7	1750	400	28	200	14	450	230	39.03	17.7
HL1124C	1 ½	18	4	1000	400	28	200	14	350	175	40.68	18.5
HL4124C	1 ½	30	7	1750	400	28	200	14	350	175	39.03	17.7
AK124C	2	65	15	1450	400	28	200	14	450	230	82	37.2
AK4124C	2	65	15	1450	400	28	200	14	350	175	82	37.2
AL124C	2	90	20	1450	400	28	200	14	450	230	85	38.6
AL4124C	2	90	20	1450	400	28	200	14	350	175	85	38.6
K124C	2	80	18	780	400	28	200	14	450	230	107.5	48.8
K1124C	2	80	18	780	400	28	200	14	350	175	111.44	50.6
K4124C	2	80	18	780	400	28	200	14	350	175	107.5	48.8
KK124C	2	100	23	780	400	28	200	14	450	230	108.29	49.2
KK1124C	2	100	23	780	400	28	200	14	350	175	112.19	50.9
KK4124C	2	100	23	780	400	28	200	14	350	175	108.29	49.2
L124C	2	135	31	640	400	28	200	14	450	230	170.97	77.6
L1124C	2	135	31	640	400	28	200	14	350	175	174.85	79.4
L4124C	2	135	31	640	400	28	200	14	350	175	170.97	77.6

① For maximum recommended discharge pressures at different viscosities, see performance curves, which can be electronically generated with the Viking Pump Curve Generator, located on www.vikingpump.com. If suction pressure exceeds 50 PSIG, consult factory. Higher pressures possible with factory approval based on application details.

② Extra clearances are required above 225°F / 105°C. Higher temperatures can be handled with special construction, consult factory.

③ Ports are tapped for standard (NPT) pipe. G through L ports are standard at 90°.

④ Maximum hydrostatic pressure for standard pump construction. Rating is dependent on seal, gaskets and ports.

UNIVERSAL PRODUCT LINE:
CAST IRON — NON-JACKETED PUMPS
124C Series™, 1124C Series™, 4124C Series™, 124A Series™, 4124A Series™, 4124B Series™, 324A Series™, 1324A Series™, 4324A Series™

SPECIFICATIONS – LL, LS, Q, QS, M, N, R, RS SIZES

Model Number	③ Standard Port Size	Nominal Pump Rating (100 SSU & below)			④ Maximum Hydrostatic Pressure		① Maximum Discharge Pressure for 100 SSU liquid at rated speed		② Maximum Recommended Temperature for Standard Pump		Approx. Shipping Weight with Valve	
	Inches	GPM	m^3/h	RPM	PSIG	BAR	PSIG	BAR	°F	°C	Lbs.	Kg.
LL124C	3	140	32	520	300	21	200	14	450	232	195.98	89.0
LL1124C	3	140	32	520	300	21	200	14	350	175	199.86	90.7
LL4124C	3	140	32	520	300	21	200	14	350	175	195.98	89.0
LS124C	3	200	45	640	300	21	200	14	450	232	224.9	102.1
LS1124C	3	200	45	640	300	21	200	14	350	175	228.78	103.8
LS4124C	3	200	45	640	300	21	200	14	350	175	224.9	102.1
Q124C	4	300	68	520	250	17	200	14	450	232	450.6	204.5
Q1124C	4	275	62	470	250	17	200	14	350	175	469.66	213.2
Q4124C	4	300	68	520	250	17	200	14	350	175	450.6	204.5
QS124C	6	500	114	520	250	17	200	14	450	232	495.32	224.8
QS1124C	6	400	91	470	250	17	200	14	350	175	502.67	228.2
QS4124C	6	500	114	520	250	17	200	14	350	175	495.32	224.8
M124A	4	420	95	420	250	17	200	14	450	232	702.67	318.9
M4124A	4	420	95	420	250	17	200	14	350	175	702.67	318.9
N324A	6	600	136	350	250	17	200	14	450	232	923.62	419.2
N1324A	6	550	125	330	250	17	200	14	350	175	928.07	421.2
N4324A	6	600	136	350	250	17	200	14	350	175	923.62	419.2
R324A	8	1,100	250	280	250	17	200	14	450	232	1761.5	799.5
R1324A	8	1,000	227	260	250	17	200	14	350	175	1766.1	801.6
R4324A	8	1,100	250	280	250	17	200	14	350	175	1761.5	799.5
RS324A	10	1,600	364	280	250	17	125	8.5	450	232	2013.3	913.8
RS1324A	10	1,500	340	260	250	17	125	8.5	350	175	2017.9	915.9
RS4324A	10	1,600	364	280	250	17	125	8.5	350	175	2013.3	913.8

① For maximum recommended discharge pressures at different viscosities, see performance curves, which can be electronically generated with the Viking Pump Curve Generator, located on www.vikingpump.com. If suction pressure exceeds 50 PSIG, consult factory. Higher pressures possible with factory approval based on application details.

② Extra clearances are required above 225°F / 105°C. Higher temperatures can be handled with special construction, consult factory.

③ Flange ports are suitable for use with Class 125 cast iron and Class 150 steel or stainless steel companion flanges or flanged fittings. LL, LS, Q & M ports are at 90°
QS, N, R and RS ports are at 180° (opposite)

④ Maximum hydrostatic pressure for standard pump construction. Rating is dependent on seal, gaskets and ports.

PORT OPTIONS FOR OPTIONAL PROPORT™ CASING

Port Options	Pump Sizes								
	H	HL	K	KK	L	LL	LS	Q	QS
1.5" NPT	✓ **	✓ **							
2" NPT			✓	✓	✓				
1.5" Class 125 ①	✓	✓							
1.5" Class 250 ②	✓	✓							
2" Class 125 ①	✓	✓	✓	✓					
2" Class 250 ②	✓	✓	✓	✓					
2.5" Class 125 ①					✓				
2.5" Class 250 ②					✓				
3" Class 125 ①			✓	✓	✓	✓	✓		
3" Class 250 ②			✓	✓	✓	✓	✓		
4" Class 125 ①			✓	✓	✓	✓	✓	✓ ③	
4" Class 250 ②					✓	✓	✓	✓ ③	
6" Class 125 ①								✓ ④	✓
6" Class 250 ②								✓ ④	✓
DIN 32 PN16 *	✓	✓							
DIN 40 PN16 *	✓	✓							
DIN 50 PN16 *			✓	✓					
DIN 65 PN16 *			✓	✓	✓	✓			
DIN 80 PN16 *			✓	✓	✓	✓	✓		
DIN 100 PN16 *					✓	✓	✓		
DIN 150 PN16 *								✓	✓

✓ = Available Port Option

① = Ports are suitable for use with Class 125 cast iron and Class 150 steel or stainless steel companion flanges or flanged fittings.

② = Ports are suitable for use with Class 250 cast iron and Class 300 steel or stainless steel companion flanges or flanged fittings

③ = Not suitable for use with opposite port Q casing.

④ = Not suitable for use with 90° Q casing.

* Ports are suitable for use with DIN PN16 steel or stainless steel companion flanges or flanged fittings

** Please note dimensional difference when replacing legacy product.

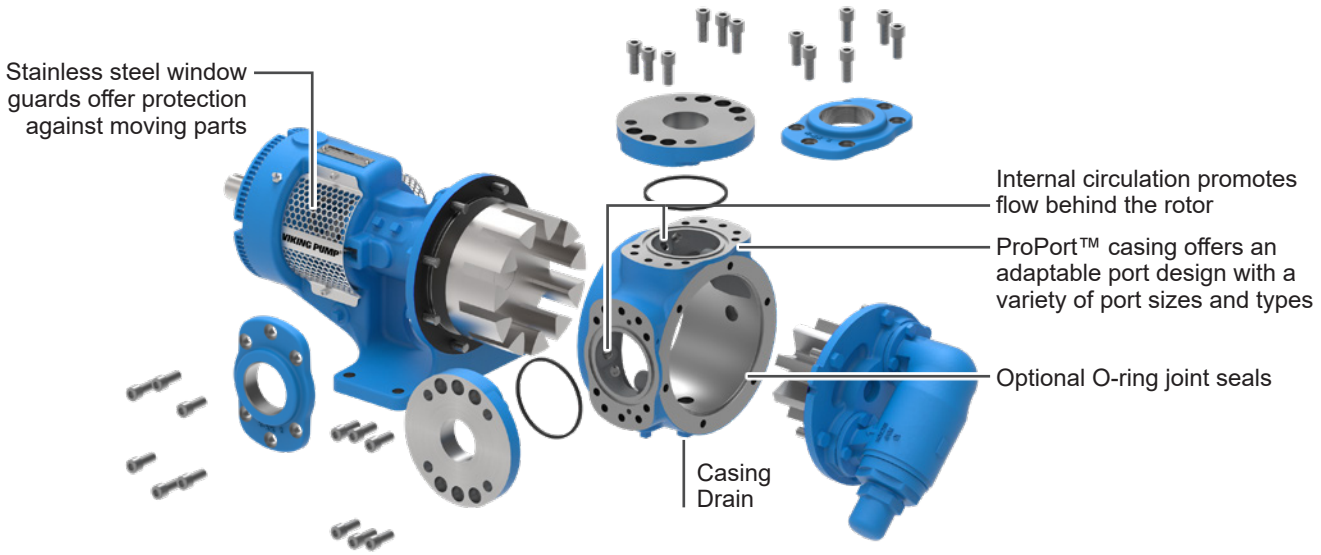

DIMENSIONS – G SIZE

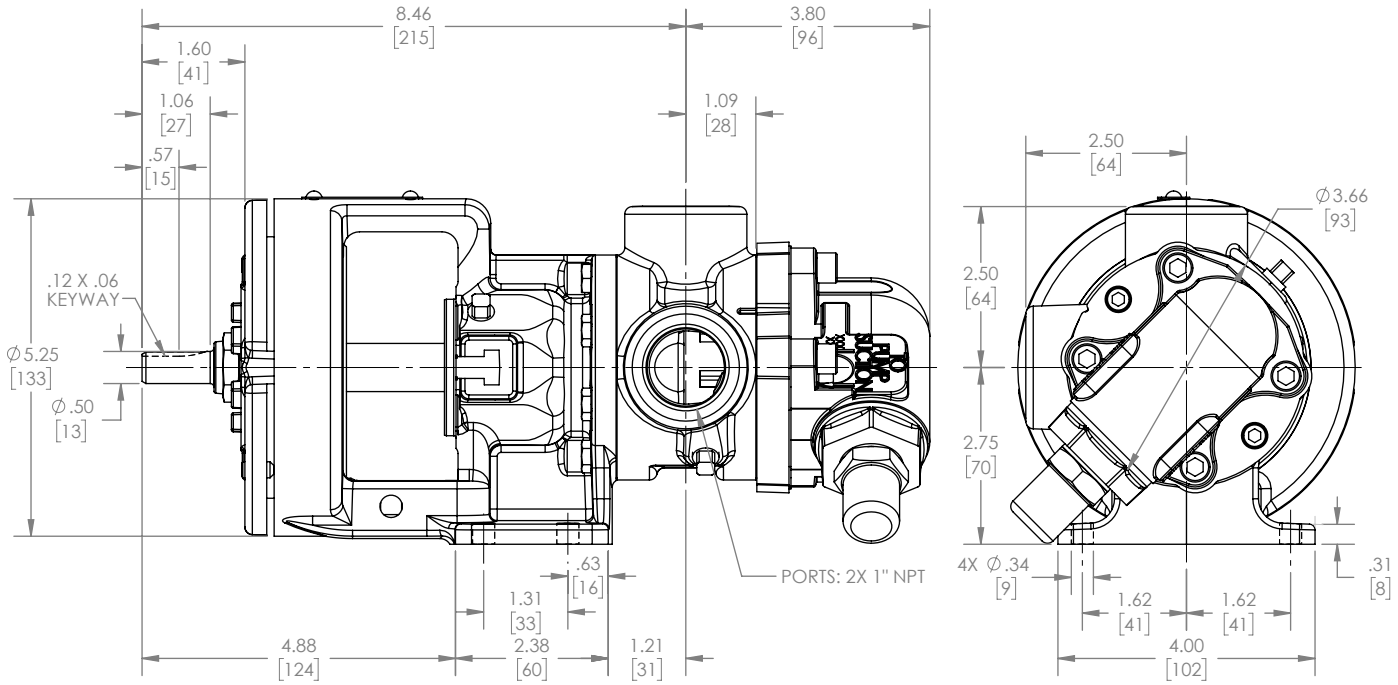

DIMENSIONS – H, HL, AK, AL, K, KK, L, LL, LS, Q SIZES

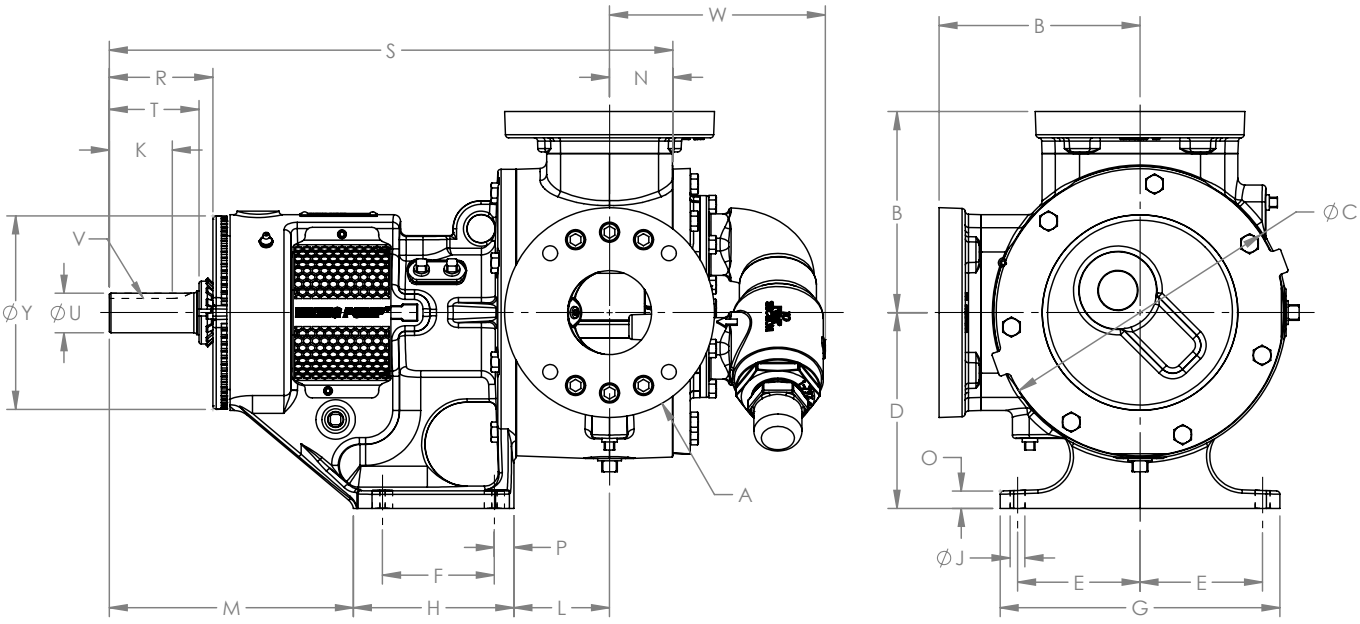

These dimensions are average and not for construction purposes. Certified prints on request.

NOTE: Dimensions "N" through "W" on next page

Model Number			A (in)		B	C	D	E	F	G	H	J	K	L	M
Packed	O-Pro® Seal	Mechanical Seal													
H124C HL124C	H1124C HL1124C	H4124C HL4124C	① 1.5	in	3.00	4.75	3.50	2.75	2.25	6.75	3.50	0.47	0.99	3.38	5.19
				mm	76	121	89	70	57	171	89	12	25	86	132
AK124C AL124C	—	AK4124C AL4124C	① 2	in	4.50	6.75	5.25	2.88	2.00	6.75	4.03	0.41	1.67	2.82	8.84
				mm	114	171	133	73	51	171	102	10	42	72	225
K124C KK124C	K1124C KK1124C	K4124C KK4124C	① 2	in	5.12	8.00	5.50	4.00	2.75	9.25	4.00	0.53	1.42	3.00	9.38
				mm	130	203	140	102	70	235	102	13	36	76	238
L124C	L1124C	L4124C	① 2	in	6.50	10.25	7.00	4.38	4.00	10.00	5.38	0.53	1.42	3.38	9.12
				mm	165	260	178	111	102	254	137	13	36	86	232
LL124C	LL1124C	LL4124C	② 3	in	7.19	10.25	7.00	4.38	4.00	10.00	5.38	0.53	1.42	3.38	9.12
				mm	183	260	178	111	102	254	137	13	36	86	232
LS124C	LS1124C	LS4124C	② 3	in	7.19	10.25	7.00	4.38	4.00	10.00	5.38	0.53	2.55	4.75	9.12
				mm	183	260	178	111	102	254	137	13	65	121	232
Q124C	Q1124C	Q4124C	② 4	in	8.25	14.00	8.75	4.12	4.00	10.00	6.00	0.69	3.58	6.62	11.12
				mm	210	356	222	105	102	254	152	18	91	168	282

① Ports are tapped for standard (NPT) pipe. Other thread standards available.

② Ports are suitable for use with Class 125 ANSI cast iron and Class 150 ANSI steel or stainless steel companion flanges or flanged fittings.

UNIVERSAL PRODUCT LINE:
CAST IRON — NON-JACKETED PUMPS
124C Series™, 1124C Series™, 4124C Series™,
124A Series™, 4124A Series™, 4124B Series™, 324A Series™, 1324A Series™, 4324A Series™

DIMENSIONS – H, HL, AK, AL, K, KK, L, LL, LS, Q SIZES (CONT'D)

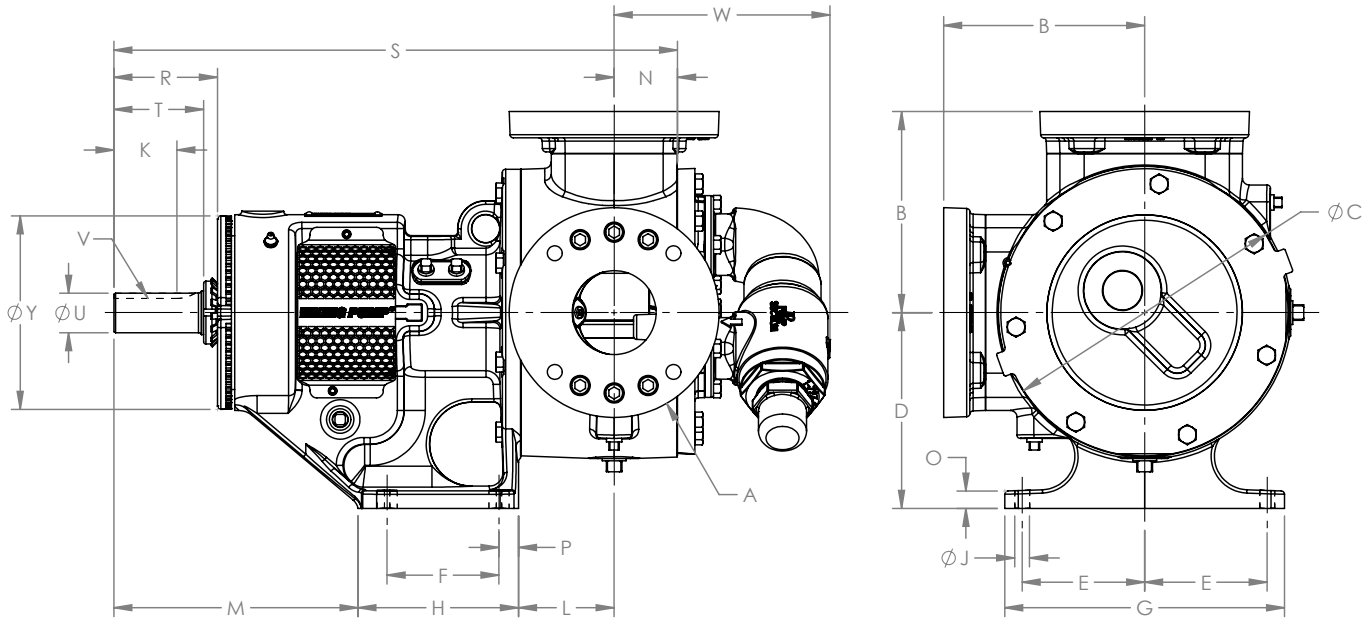

These dimensions are average and not for construction purposes. Certified prints on request.

NOTE: Dimensions “A” through “M” on previous page

Model Number												
Packed	O-Pro® Seal	Mechanical Seal		N	O	P	R	S	T	U (in)	V (in)	W
H124C HL124C	H1124C HL1124C	H4124C HL4124C	in	1.19	0.56	0.62	10.44	13.25	1.62	0.75	.19 x .09	2.85
			mm	30	14	16	265	337	41			72
AK124C AL124C	—	AK4124C AL4124C	in	2.00	0.44	1.00	13.19	17.69	2.50	1.00	.25 x .12	4.83
			mm	51	11	25	335	449	64			123
K124C KK124C	K1124C KK1124C	K4124C KK4124C	in	1.75	0.62	0.62	14.12	18.13	2.25	1.12	.25 x .12	5.25
			mm	44	16	16	359	461	57			133
L124C	L1124C	L4124C	in	1.75	0.62	0.62	15.62	19.63	2.25	1.44	.38 x .19	5.43
			mm	44	16	16	397	499	57			138
LL124C	LL1124C	LL4124C	in	2.25	0.62	0.62	15.62	20.12	2.25	1.44	.38 x .19	5.43
			mm	57	16	16	397	511	57			138
LS124C	LS1124C	LS4124C	in	2.44	0.62	0.62	15.75	21.69	3.50	1.44	.38 x .19	5.43
			mm	62	16	16	400	551	89			138
Q124C	Q1124C	Q4124C	in	3.00	0.8	1.00	19.25	26.75	4.50	1.94	.50 x .25	8.25
			mm	76	20	25	489	679	114			210

DIMENSIONS – QS SIZE

Dimensions shown in inches with millimeter equivalent shown in parentheses

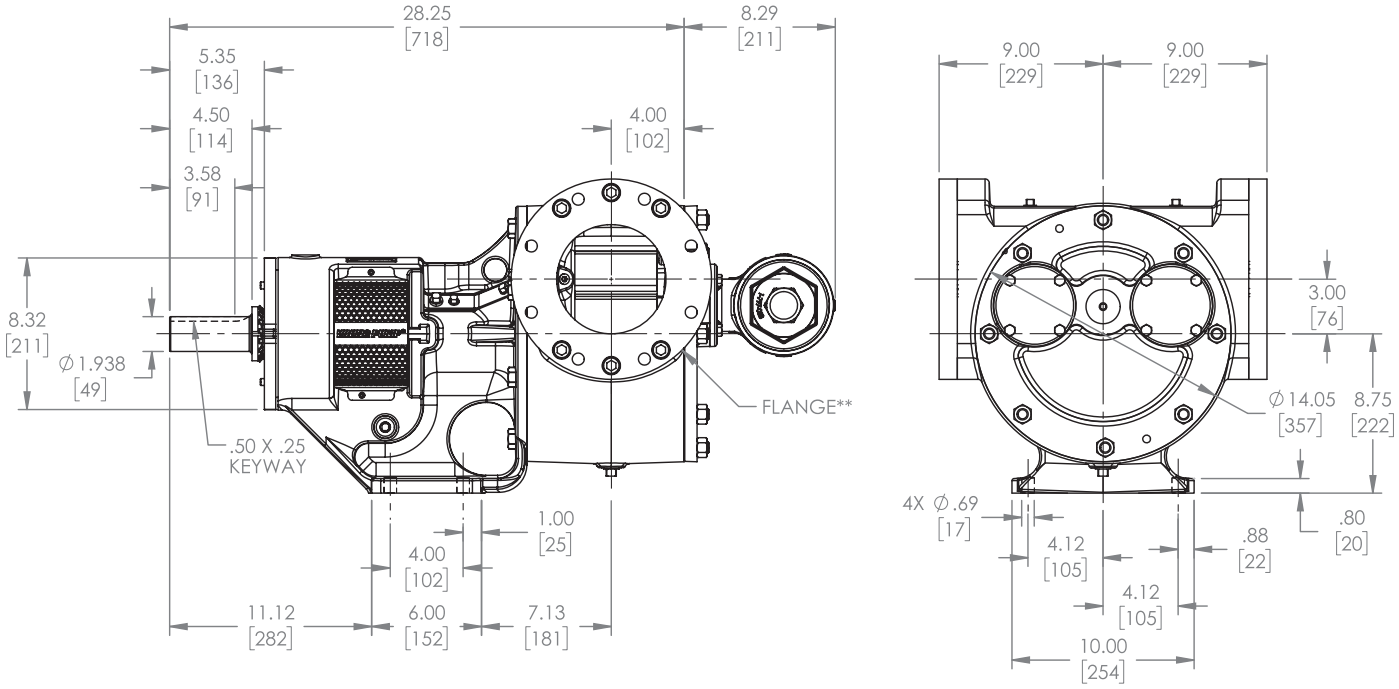

* 124C Series™, 1124C Series™, 4124C Series™ ports suitable for use with Class 125 ANSI cast iron companion flanges or flanged fittings.

NOTE: Flanges are 6", suitable for use with Class 125 ANSI or Class 150 ANSI steel or stainless steel companion flanges or flanged fittings. They are studded, not through-bolt.

UNIVERSAL PRODUCT LINE:
CAST IRON — NON-JACKETED PUMPS
124C Series™, 1124C Series™, 4124C Series™,
124A Series™, 4124A Series™, 4124B Series™, 324A Series™, 1324A Series™, 4324A Series™

DIMENSIONS – M SIZE

Dimensions shown in inches with millimeter equivalent shown in parentheses

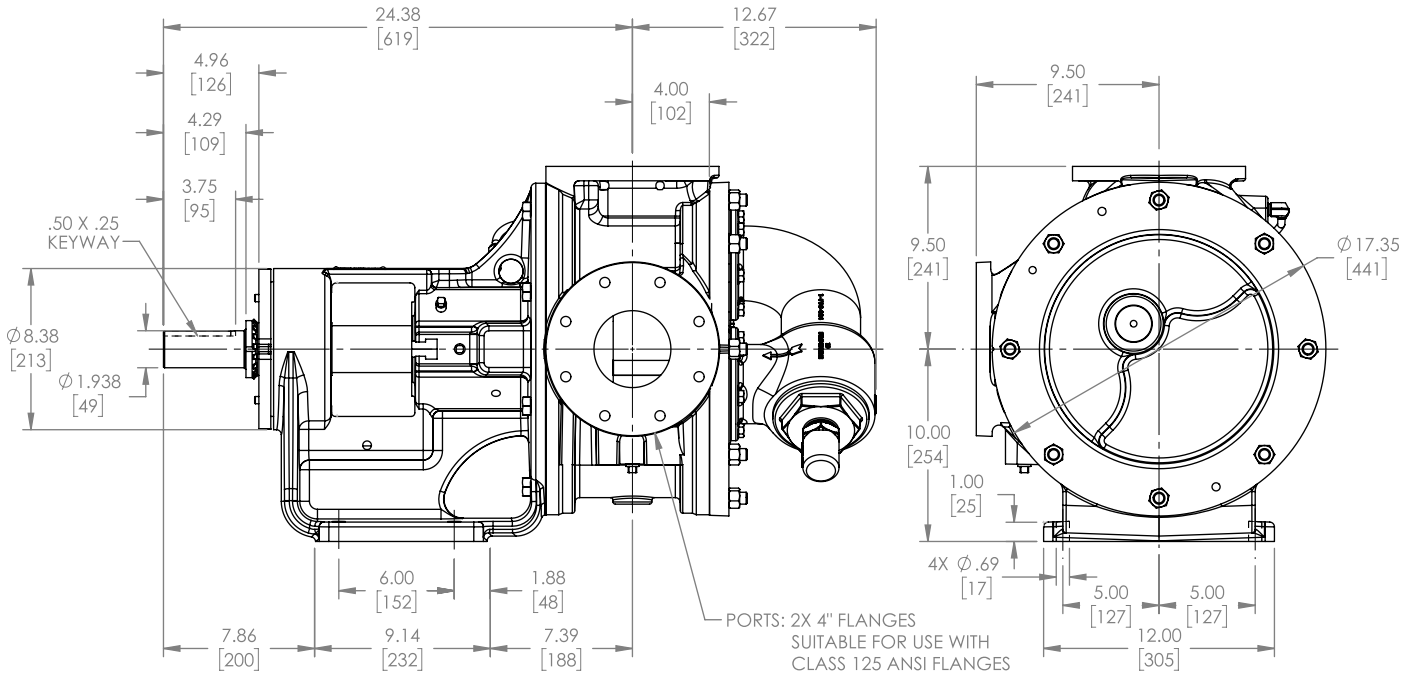

DIMENSIONS – N, R, RS SIZES – JACKETED BRACKET (324A SERIES™, 1324A SERIES™, 4324A SERIES™)

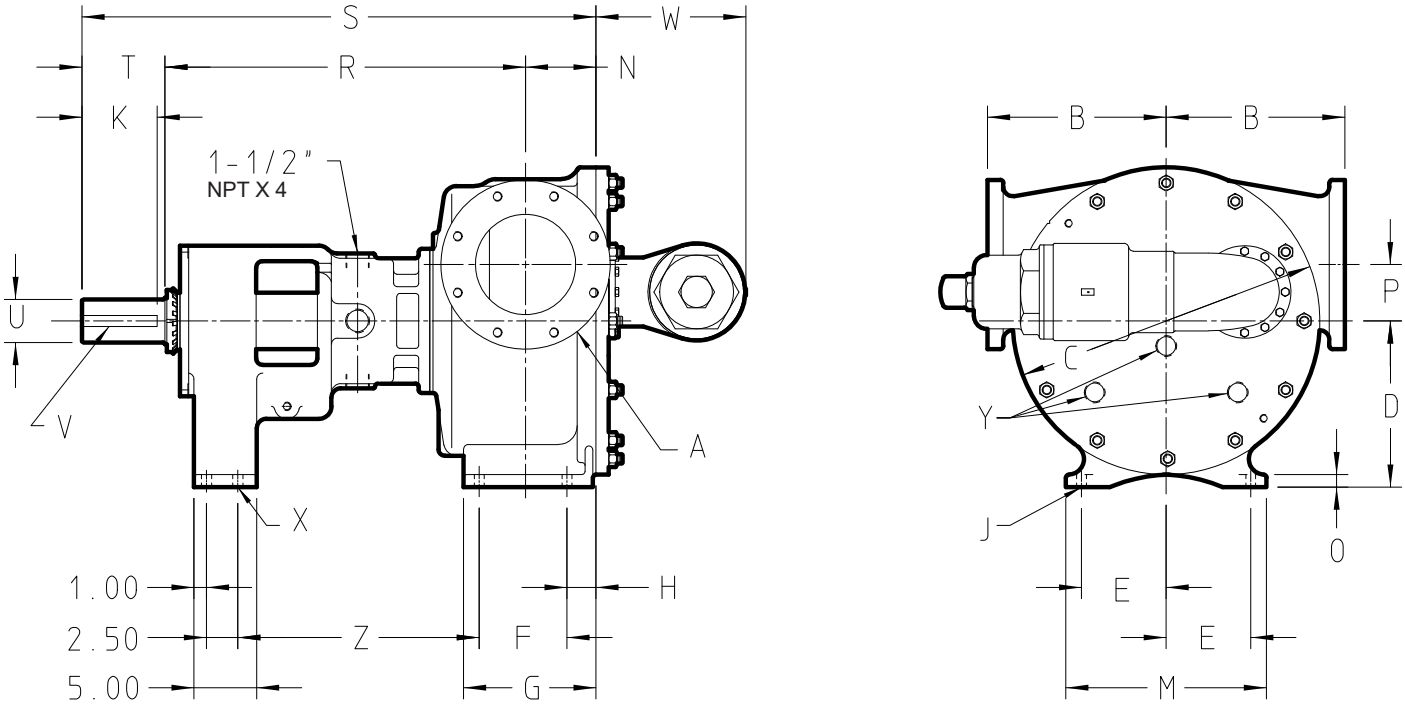

Model Number			A (in)		B	C	D	E	F	G	H	J	K	M	N
Packed	O-Pro® Seal	Stuffing Box Seal													
N324A	N1324A	N4324A	① 6	in	9.75	17.25	9.50	5.00	6.25	8.69	1.62	0.69	4.50	12.00	4.50
				mm	248	438	241	127	159	221	41	18	114	305	114
R324A	R1324A	R4324A	① 8	in	14.25	24.50	13.25	6.75	7.00	10.56	2.31	0.78	6.00	16.00	5.62
				mm	362	622	337	171	178	268	59	20	152	406	143
RS324A	RS1324A	RS4324A	① 10	in	14.25	24.5	13.25	6.75	7.00	13.12	4.81	0.88	6.00	16.46	8.12
				mm	362	622	337	171	178	333	122	22	152	418	206

Model Number				O	P	R	S	T	U (in)	V (in)	W	X	Y	Z
Packed	O-Pro® Seal	Stuffing Box Seal												
N324A	N1324A	N4324A	in	1.00	3.00	26.00	36.50	6.00	2.44	.62 x.31	8.63	0.69	—	18.94
			mm	25	76	660	927	152			219	18	—	481
R324A	R1324A	R4324A	in	1.00	4.50	28.75	41.00	6.62	3.44	.88 x.44	12.00	0.69	1.25	19.25
			mm	25	114	730	1041	168			305	18	32	489
RS324A	RS1324A	RS4324A	in	1.30	4.50	28.55	43.49	6.62	3.44	.88 x.44	—	0.88	1.25	19.25
			mm	33	114	725	1105	168			—	22	32	489

① Ports are suitable for use with Class 125 ANSI cast iron and Class 150 (324A Series™/4324A Series™)

NOTE: The N size is standard with a jacketed bracket and non-jacketed head and non-jacketed relief valve, while the "R" size is standard with a jacketed bracket, a jacketed head, and a non-jacketed relief valve. "RS" contact factory for jacketing options. RS relief valve not available. Contact factory for options.

UNIVERSAL PRODUCT LINE:
CAST IRON — NON-JACKETED PUMPS
124C Series™, 1124C Series™, 4124C Series™,
124A Series™, 4124A Series™, 4124B Series™, 324A Series™, 1324A Series™, 4324A Series™

NPSH REQUIRED

Printed performance curves are not available.

Performance curves can be electronically generated with the Viking Pump Curve Generator on vikingpump.com.

NPSHR data is not available on the pump selector.

NPSH (Net Positive Suction Head): The $NPSH_R$ (Net Positive Suction Head Required by the pump) is given in the table below and applies for viscosities through 750 SSU. $NPSH_A$ (Net Positive Suction Head – Available in the system) must be greater than the $NPSH_R$. For a complete explanation of NPSH, see Application Data Sheet AD-19.

FOR VISCOSITIES UP TO 750 SSU – See $NPSH_R$ table below.

$NPSH_R$ for high viscosities can be estimated using the following method:

1. Calculate line loss for a 1 foot long pipe of a diameter matching the pump inlet port size. Use your flow rate and max viscosity.

2. Convert this value into Feet of Liquid (S.G. 1.0)

3. Add this value to the $NPSH_R$ value in the chart below.

PUMP SIZE	PUMPS SPEED, RPM														
	100	125	155	190	230	280	350	420	520	640	780	950	1150	1450	1750
G	—	—	—	—	—	—	—	1.8	2.0	2.2	2.6	3.1	3.9	5.6	7.6
H, HL	—	—	—	—	1.7	1.8	1.9	2.1	2.4	2.8	3.4	4.5	6.2	9.5	13.5
AK, AL	—	—	1.6	1.7	1.8	2.0	2.3	2.7	3.2	3.9	5.5	7.7	11.2	—	—
K, KK	—	1.7	1.8	1.9	2.1	2.3	2.8	3.3	4.4	6.3	9.1	—	—	—	—
L	1.6	1.8	2.0	2.2	2.5	3.0	3.8	5.0	7.3	10.8	—	—	—	—	—
LL	1.6	1.8	2.0	2.2	2.5	3.0	3.8	5.0	7.3	—	—	—	—	—	—
LS	1.6	1.8	2.0	2.2	2.5	3.0	3.8	5.0	7.3	10.8	—	—	—	—	—
Q, QS	1.9	2.1	2.3	2.7	3.3	4.2	6.1	8.4	12.7	—	—	—	—	—	—
M	2.1	2.3	2.8	3.4	4.3	6.0	9.0	12.7	—	—	—	—	—	—	—
N	2.1	2.3	3.5	4.5	6.3	9.5	15.0	—	—	—	—	—	—	—	—
R	6.1	7.1	8.3	10.1	12.1	15.2	—	—	—	—	—	—	—	—	—
RS	7.0	8.5	10.4	13.1	17.2	22.4	—	—	—	—	—	—	—	—	—

$NPSH_R$ – FEET OF LIQUID (Specific Gravity 1.0), Viscosities up to 750 SSU