Victaulic® Ball Valve
Series 726

08.23



Lever Operator



Lever Operator with Stem Extension



Gear Operator

1.0 PRODUCT DESCRIPTION

Available Sizes:

- 1 ½ – 6"/DN40 – DN150

Maximum Working Pressure:

- Accommodates pressures up to 1000 psi/6894 kPa/69 Bar

Application:

- Two-piece, end-entry valve featuring a floating ball design
- Intended for use in full open or shut-off service; throttling is not recommended with standard ball valves

2.0 CERTIFICATIONS/LISTINGS

Conforms to ASME A17.1-2007/CSA B44-07 and is NACE compliant.

CE

ALWAYS REFER TO ANY NOTIFICATIONS AT THE END OF THIS DOCUMENT REGARDING PRODUCT INSTALLATION, MAINTENANCE OR SUPPORT.

08.23 3068 Rev N Updated 05/2026 © 2026 Victaulic Company. All rights reserved.

3.0 SPECIFICATIONS - MATERIAL

Body and End Cap: Ductile iron conforming to ASTM A395.

Ball: (specify choice)

- ☐ Standard: Carbon steel, chrome plated.
- ☐ Optional: 316 stainless steel.
- ☐ Optional: 316 stainless steel with vent.

Stem: Same material as specified for the Ball (see above).

Seats: Glass-reinforced polytetrafluoroethylene (PTFE)

Seals: Fluoroelastomer (Blue stripe color code). Temperature range +20°F to +250°F/ -7°C to +121°C. NOT COMPATIBLE FOR USE WITH HOT WATER SERVICES OR STEAM SERVICES.

Operators: (specify choice)

Lever Operator:

- ☐ 1 ½ – 3"/DN40 – DN80: Carbon steel, zinc-plated, plastic grip.
- ☐ 4 – 6"/DN100 – DN150: Carbon steel, enamel paint.
- ☐ Optional trim: Stainless steel.

Gear Operator:

- ☐ Standard: Manual with hand wheel.
- ☐ Optional trim: Stainless steel.

Operator Bracket: Hot rolled steel, black enamel-coated.

Bracket Bolts/Washers: Cold rolled steel, zinc-plated.

Power Actuators: Electric, pneumatic, hydraulic.

Integral Locking Drive Components: Stamped carbon steel, zinc-plated.

Stem Extension:

- ☐ Stem Extension: 316 stainless steel.
- ☐ Packing: TFE.
- ☐ Adapter: ASTM A351 Grade CF8M stainless steel
- ☐ Stem Extension Hardware (1 ½ – 6"/DN40 – DN150): 304 stainless steel.
- ☐ Handle Hub (4 – 6"/DN100 – DN150 Sizes): ASTM A536 Grade 65-45-12.
- ☐ Handle Bolt (4 – 6"/DN100 – DN150 Sizes): Carbon steel.
- ☐ Pipe Handle (4 – 6"/DN100 – DN150 Sizes): ASTM A53.

 © 2026 Victaulic Company. All rights reserved.

4.0 DIMENSIONS

Series 726 Ball Valve
With Lever Operator

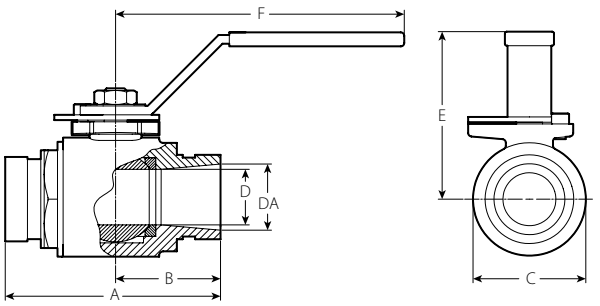

1 ½ – 3"/DN40 – DN80

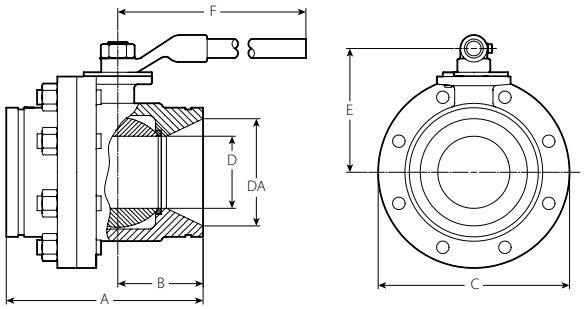

4 – 6"/DN100 – DN150

Size		Dimensions							Weight
Nominal inches DN	**Actual Outside Diameter** inches mm	**A** inches mm	**B** inches mm	**C** inches mm	**D** inches mm	**DA** inches mm	**E** inches mm	**F** inches mm	**Approx. (Each)** lb kg
1 ½ DN40	1.900 48.3	5.10 130	2.36 60	2.75 70	1.25 32	1.50 38	3.00 76	7.00 178	4.4 2.0
2 DN50	2.375 60.3	5.50 140	2.48 63	3.25 83	1.50 38	2.00 51	3.38 86	7.00 178	6.5 2.9
2 ½	2.875 73.0	6.30 160	2.80 71	4.00 102	2.00 51	2.50 64	4.00 102	9.88 251	10.4 4.7
DN65	3.000 76.1	6.30 160	2.80 71	4.00 102	2.00 51	2.50 64	4.00 102	9.88 251	10.4 4.7
3 DN80	3.500 88.9	6.60 168	3.15 80	4.88 124	2.50 64	3.00 76	4.63 118	10.00 254	14.9 6.8
4 DN100	4.500 114.3	8.30 211	3.35 85	7.75 197	3.00 76	4.00 102	5.50 140	15.75 400	41.5 19.0
	6.500 165.1	10.10 257	4.53 115	9.88 251	4.00 102	6.00 152	6.88 175	18.13 461	78.5 35.5
6 DN150	6.625 168.3	10.10 257	4.53 115	9.88 251	4.00 102	6.00 152	6.88 175	18.13 461	78.5 35.5

 © 2026 Victaulic Company. All rights reserved.

4.0 DIMENSIONS

Series 726 Ball Valve
With Lever Operator and Stem Extension

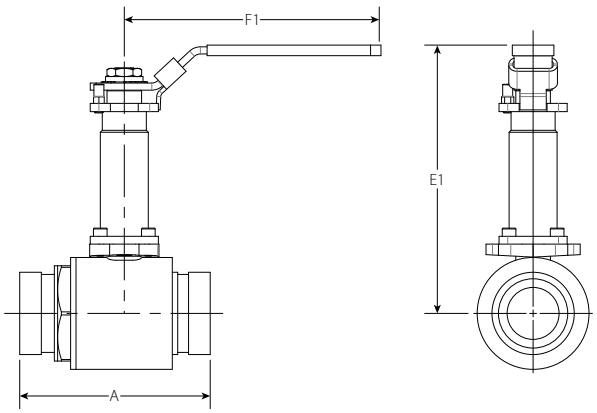

1 ½ – 3"/DN40 – DN80

Size		Dimensions			Weight
Nominal inches DN	**Actual Outside Diameter** inches mm	**A** inches mm	**E1** inches mm	**F1** inches mm	**Approx. (Each)** lb kg
1 ½ DN40	1.900 48.3	5.10 130	7.38 185	7.50 188	6.5 2.9
2 DN50	2.375 60.3	5.50 140	7.38 186	7.50 188	9.3 4.2
2 ½	2.875 73.0	6.30 160	8.50 215	11.50 292	13.0 5.9
DN65	3.000 76.1	6.30 160	8.50 215	11.50 292	13.0 5.9
3 DN80	3.500 88.9	6.60 168	8.75 221	11.50 292	21.0 9.5
4 DN100	4.500 114.3	8.30 211	9.63 243	15.75 398	52.0 23.5
	6.500 165.1	10.10 257	1.088 276	18.13 459	89.0 40.5
6 DN150	6.625 168.3	10.10 257	10.88 276	18.13 459	89.0 40.5

 © 2026 Victaulic Company. All rights reserved.

4.1 DIMENSIONS

Series 726 Ball Valve
With Gear Operator

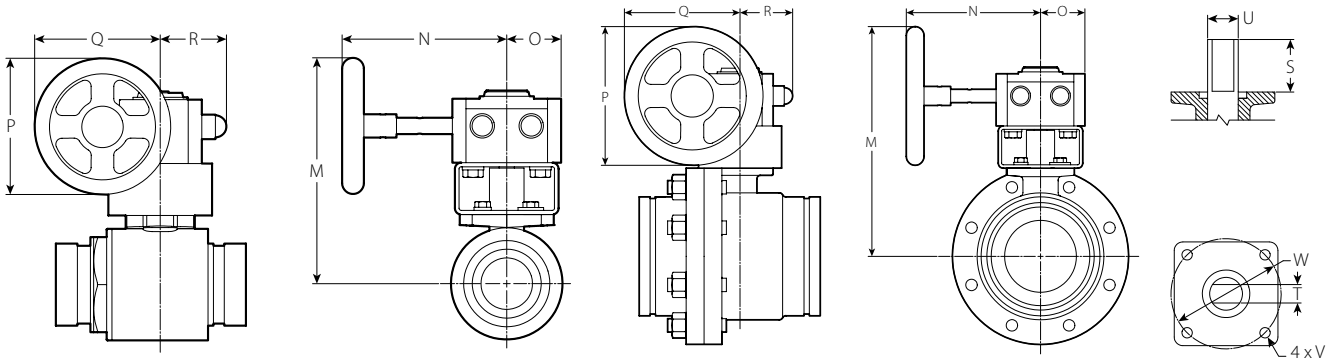

1 ½ – 3"/DN40 – DN80

4 – 6"/DN100 – DN150

Size		Dimensions											Weight
Nominal inches DN	**Actual Outside Diameter** inches mm	**M** inches mm	**N** inches mm	**O** inches mm	**P** inches mm	**Q** inches mm	**R** inches mm	**S** inches mm	**T** inches mm	**Ø U** inches mm	**V** metric	**W** inches mm	**Approx. (Each)** lb kg
1 ½ DN40	1.900 48.3	6.38 160	4.88 121	1.63 40	3.94 100	3.75 93	2.00 49	0.81 21	0.35 9	0.56 14	M6 x 1.00	1.97 50	7.1 3.2
2 DN50	2.375 60.3	6.63 166	4.88 121	1.63 40	3.94 100	3.75 93	2.00 49	0.81 21	0.35 9	0.56 14	M6 x 1.00	1.97 50	9.1 4.1
2½	2.875 73.0	6.88 174	4.88 121	1.63 40	3.94 100	3.75 93	2.00 49	1.00 25	0.47 12	0.75 19	M8 x 1.25	2.76 70	12.9 5.9
DN65	3.000 76.1	6.88 174	4.88 121	1.63 40	3.94 100	3.75 93	2.00 49	1.00 25	0.47 12	0.75 19	M8 x 1.25	2.76 70	12.9 5.9
3 DN80	3.500 88.9	8.00 202	7.38 186	2.00 51	5.00 127	4.50 113	2.25 56	1.03 26	0.47 12	0.75 19	M8 x 1.25	2.76 70	20.0 9.1
4 DN100	4.500 114.3	10.00 253	7.38 186	2.00 51	5.00 127	4.50 113	2.25 56	1.64 42	0.55 14	0.81 21	M10 x 1.50	4.02 102	44.7 20.3
	6.500 165.1	13.00 329	9.00 228	2.88 73	8.00 203	6.38 161	3.13 79	1.98 50	0.67 17	1.02 26	M10 x 1.50	4.02 102	89.0 40.5
6 DN150	6.625 168.3	13.00 329	9.00 228	2.88 73	8.00 203	6.38 162	3.13 79	1.98 50	0.67 17	1.02 26	M10 x 1.50	4.02 102	89.0 40.5

 © 2026 Victaulic Company. All rights reserved.

5.0 PERFORMANCE

Maximum Working Pressure

Valve Size		Maximum Working Pressure
Nominal inches DN	**Actual Outside Diameter** inches mm	psi kPa
1 ½ – 3 DN40 – DN80	1.900 – 3.500 48.3 – 88.9	1000 6895
4 – 6 DN100 – DN150	4.500 – 6.625 114.3 – 168.3	800 5516

5.1 PERFORMANCE

Flow Characteristics

Cv values for flow of water at +60°F/+16°C are shown in the tables below.

Formulas for Cv values

$$\Delta P = \frac{Q^2}{C_v^2}$$

$$Q = C_v \times \sqrt{\Delta P}$$

Where:

Q = Flow (GPM)

ΔP = Pressure Drop (psi)

C_v = Flow Coefficient

Valve Size		Flow Coefficient
Nominal inches DN	**Actual Outside Diameter** inches mm	**Full Open** Cv Kv
1 ½ DN40	1.900 48.3	130 112
2 DN50	2.375 60.3	180 156
2 ½	2.875 73.0	340 294
DN65	3.000 76.1	340 294
3 DN80	3.500 88.9	600 519
4 DN100	4.500 114.3	650 562
	6.500 165.1	800 692
6 DN150	6.625 168.3	800 692

 © 2026 Victaulic Company. All rights reserved.

5.2 PERFORMANCE

Torque Requirements

The following chart details required torque to operate Victaulic Series 726 Ball Valves under varied working pressure conditions. This chart may be used to determine optional gear operator or remote electric or pneumatic actuator requirement. Contact Victaulic for specific operator/actuator recommendations.

These torque values were derived from test data in water at ambient temperature. All torque values are for normal service conditions where corrosion is expected to be minor, and the media is clean and non abrasive. The torque shown on the chart should be multiplied by the appropriate factor listed below.

Breakaway Factor:

Ball valves will require additional breakaway torque if they are not continuously operated. A breakaway factor of between 2:1 and 3:1 should be applied to break the ball loose after being in a static condition for more than a few hours.

Typical fluid torque factors commonly used in the industry are:

- Water and other liquids – 1.0
- Dry gasses – 1.5 – 2.0

Actuation Factor:

A minimum factor of 1.2 is recommended for directly actuated valves and 1.5 for 3-way assemblies. Apply the actuation factor to the higher of the breakaway or service factor.

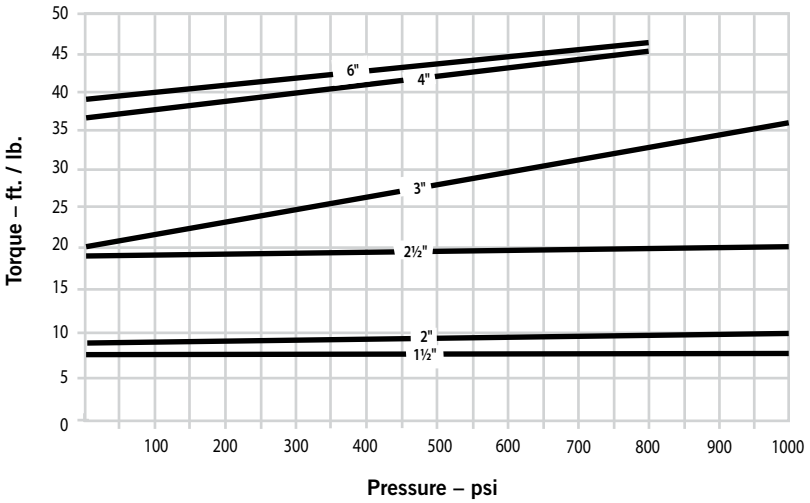

 © 2026 Victaulic Company. All rights reserved.

5.3 PERFORMANCE

Series 726 Valve Numbering System

B - 020 - 1 1 6 6 - 16

Type	Actual OD in/mm	Size Code	Pressure Rating	Body	Ball & Stem	Seat	Operator
B	1.900/48.3 2.375/60.3 2.875/73.0 3.000/76.1 3.500/88.9 4.500/114.3 6.500/165.1 6.625/168.3	014 020 024 761 030 040 165 060	1 - 1,000 psi[2] 8 - 800 psi[3]	1 - Iron[4] 9 - Special[1]	2 - 316 Stainless Steel 3 - 316 Stainless steel with vented ball 6 - Chrome Plated Carbon Steel 9 - Special[1]	6 - Reinforced Teflon 9 - Special[1]	00 - Bare 16 - 2-Position Handle (Standard Trim) with Tamper- Proof Locking Device 18 - 2-Position Handle (Standard Trim) with Stem Extension and Tamper-Proof Locking Device 19 - Locking Device - Without Handle 20 - Gear Operator 21 - Gear Operator with Memory Stop 22 - Gear Operator with Chainwheel 23 - Gear Operator with AWWA Square Nut 26 - 2-Position Handle (Stainless Trim) with Tamper-Proof Locking Device 28 - 2-Postion Handle (Stainless Trim) with Stem Extension and Tamper-Proof Locking Device 29 - Non-standard Gear Operator[1]

NOTES:
(1) Details required.
(2) For sizes 1½" / 48.3mm thru 3" / 88,9mm
(3) For sizes 4" / 114,3mm thru 6" / 168,3mm
(4) All iron body valves are AMPP (NACE) compliant
(•) For stainless steel Series 726S, request publication 17.22

 © 2026 Victaulic Company. All rights reserved.

6.0 NOTIFICATIONS

⚠ WARNING



- **Read and understand all instructions before attempting to install any Victaulic products.**
- **Always verify that the piping system has been completely depressurized and drained immediately prior to installation, removal, adjustment, or maintenance of any Victaulic products.**
- **Confirm that any equipment, branch lines, or sections of piping that may have been isolated for/during testing or due to valve closures/positioning are identified, depressurized, and drained immediately prior to installation, removal, adjustment, or maintenance of any Victaulic products.**
- **Wear safety glasses, hardhat, foot protection, and hearing protection.**

Failure to follow these instructions could result in death or serious personal injury and property damage.

7.0 REFERENCE MATERIALS

17.22: Stainless Steel Ball Valve Series 726S

26.01: Victaulic Design Data

29.01: Victaulic Terms and Conditions of Sale

I-100: Victaulic Field Installation Handbook

I-ENDCAP: Victaulic End Cap Installation Instructions

User Responsibility for Product Selection and Suitability

Each user bears final responsibility for determining the suitability of Victaulic products for their end-use application, in accordance with industry standards, project specifications, and Victaulic's published performance, maintenance, and safety data, as well as all warnings and installation instructions. Nothing in this or any other document, nor any verbal recommendation, advice, or opinion from any Victaulic employee, shall be deemed to alter, vary, supersede, or waive any provision of Victaulic Company's standard conditions of sale, warranty, installation instructions, or this disclaimer.

Installation

Always refer to and follow the Victaulic Installation Handbook or installation instructions for the product you are installing. Handbooks are included with each shipment of Victaulic products, providing complete installation and assembly data, and are available in PDF format on our website at victaulic.com.

Warranty

Refer to the Warranty section of the current Price List or contact Victaulic for details.

Intellectual Property Rights

No statement concerning the use of any material, product, service, or design is intended, or should be construed, to grant any license under any patent or other intellectual property right of Victaulic or any of its affiliates, or as a recommendation for the use of such material, product, service, or design in the infringement of any patent or other intellectual property right. The terms "Patented" or "Patent Pending" refer to design or utility patents or patent applications for articles and/or methods of use in the United States and/or other countries. Victaulic and all other Victaulic marks are the trademarks or registered trademarks of Victaulic Company, and/or its affiliated entities, in the U.S. and/or other countries.

Note

All products bearing a Victaulic trademark are manufactured by Victaulic or to Victaulic specifications. All products are to be installed only in accordance with the applicable Victaulic installation instructions. Victaulic reserves the right to change product specifications, designs and standard equipment without notice and without incurring obligations.

08.23 3068 Rev N Updated 05/2026 © 2026 Victaulic Company. All rights reserved.