SCHMERSAL

Original instructions

1 About this document 1
1.1 Function 1
1.2 Target group of the operating instructions: authorised qualified personnel 1
1.3 Explanation of the symbols used 1
1.4 Appropriate use 1
1.5 General safety instructions 1
1.6 Warning about misuse 1
1.7 Exclusion of liability 2
2 Product description 2
2.1 Ordering code 2
2.2 Special versions 2
2.3 Purpose 2
2.4 Technical Data 2
3 Mounting 5
3.1 General mounting instructions 5
3.2 Dimensions 5
3.3 Accessories 5
4 Electrical connection 6
4.1 General information for electrical connection 6
4.2 Cable 7
4.3 Serial diagnostic -SD 7
4.4 Wiring examples for series-wiring 7
4.5 Wiring configuration and connector accessories 8
5 Actuator teaching / actuator detection 9
6 Active principle and diagnostic functions 9
6.1 Magnet control 9
6.2 Mode of operation of the safety outputs 9
6.3 Diagnostic-LEDs 9
6.4 Solenoid interlock with conventional diagnostic output 9
6.5 Differences in diagnostic behaviour -1P2P, -1P2PV 11
6.1.1 Behaviour of the diagnostic output AZM201...-1P2P 11
6.2.2 Behaviour of the diagnostic output AZM201...-1P2PV 12
6.6 Solenoid interlock with serial diagnostic function SD 13
7 Set-up and maintenance 14
8 Disassembly and disposal 14
8.1 Disassembly 14
8.2 Disposal 14
9 Declaration of conformity 14
10 Appendix – Special versions 15
10.1 Compact overview special versions 15
10.2 Special version -2794 15
10.3 Special version -2965-1 16
10.4 Special version -2965-2 16
10.5 Special version -2965-3 16
10.6 Special version -2965-4 16
10.7 Special version -2965-5 16
10.8 Special version -2965-6 16
10.9 Special version -3030 17
11 Contact 17

1. About this document

1.1 Function

This operating instructions manual provides all the information you need for the mounting, set-up and commissioning to ensure the safe operation and disassembly of the safety switchgear.

1.2 Target group of the operating instructions: authorised qualified personnel

All operations described in the operating instructions manual must be carried out by trained specialist personnel, authorised by the plant operator only.

Please make sure that you have read and understood these operating instructions and that you know all applicable legislations regarding occupational safety and accident prevention prior to installation and putting the component into operation.

The machine builder must carefully select the harmonised standards to be complied with as well as other technical specifications for the selection, mounting and integration of the components.

1.3 Explanation of the symbols used

Information, hint, note: This symbol is used for identifying useful additional information.

Caution: Failure to comply with this warning notice could lead to failures or malfunctions.
Warning: Failure to comply with this warning notice could lead to physical injury and/or damage to the machine.

1.4 Appropriate use

The Schmersal range of products is not intended for private consumers.

The products described in these operating instructions are developed to execute safety-related functions as part of an entire plant or machine. It is the responsibility of the manufacturer of a machine or plant to ensure the correct functionality of the entire machine or plant.

The safety switchgear must be exclusively used in accordance with the versions listed below or for the applications authorised by the manufacturer. Detailed information regarding the range of applications can be found in the chapter “Product description”.

1.5 General safety instructions

The user must observe the safety instructions in this operating instructions manual, labelled with the caution or warning symbol above, the country-specific installation standards as well as all prevailing safety regulations and accident prevention rules.

Further technical information can be found in the Schmersal catalogues or in the online catalogue on the Internet: products.schmersal.com.

The information contained in this operating instructions manual is provided without liability and is subject to technical modifications.

There are no residual risks, provided that the safety instructions as well as the instructions regarding mounting, commissioning, operation and maintenance are observed.

1.6 Warning about misuse

In case of inadequate or improper use or manipulations of the component, personal hazards or damage to machinery or plant components cannot be excluded.

1.7 Exclusion of liability

We shall accept no liability for damages and malfunctions resulting from defective mounting or failure to comply with the operating instructions manual. The manufacturer shall accept no liability for damages resulting from the use of unauthorised spare parts or accessories.

For safety reasons, invasive work on the device as well as arbitrary repairs, conversions and modifications to the device are strictly forbidden, the manufacturer shall accept no liability for damages resulting from such invasive work, arbitrary repairs, conversions and/or modifications to the device.

2. Product description

2.1 Ordering code

This operating instructions manual applies to the following types:

AZM201(1)-(2)-(3)-T-(4)-(5)	
(1)	
Z	Guard locking monitored
B	Actuator monitored
(2)	
without	Standard coding
I1	Individual coding
I2	Individual coding, multiple teaching
(3)	
SK	Screw terminals
CC	Cage clamps
ST2	Connector plug M12, 8-pole
(4)	
1P2PW	1 diagnostic output, p-type and 2 safety outputs, p-type (combined diagnostic signal: guard system closed and interlock locked)
SD2P	serial diagnostic output and 2 p-type safety outputs
(5)	
without	Power to unlock
A	Power to lock

Actuator	suitable for
AZ/AZM201-B1-...	Sliding safety guards
AZ/AZM201-B30-...	Hinged safety guards
AZ/AZM201-B40-...	Hinged-doors with overlapping folds

2.2 Special versions

For special versions, which are not listed in the ordering code, these specifications apply accordingly, provided that they correspond to the standard version.

Special information or information deviating from the standard on special versions can be found in the concluding chapter “Appendix – Special versions”.

2.3 Purpose

The non-contact, electronic safety switchgear is designed for application in safety circuits and is used for monitoring the position and locking of movable safety guards.

The different variants can be used as safety switch with interlocking function either as solenoid interlock.

If the risk analysis indicates the use of a **monitored interlock** then a variant with the monitored interlock is to be used, marked with the symbol in the ordering code. The actuator monitoring variant (B) is a safety switch with an interlock function for process protection.

The safety function consists of safely switching off the safety outputs when the safety guard is unlocked or opened and maintaining the safe switched off condition of the safety outputs for as long as the safety guard is open.

Interlocks with power to lock principle may only be used in special cases after a thorough evaluation of the accident risk, since the safety guard can be opened immediately on failure of the power supply or upon activation of the main switch.

The safety switchgears are classified according to ISO 14119 as type 4 interlocking devices. Designs with individual coding are classified as highly coded.

Series-wiring

Series-wiring can be set up. In the case of a series connection, the risk time remains unchanged and the reaction time increases by the sum of the reaction time of the inputs per additional unit specified in the technical data. The quantity of devices is only limited by the cable drops and the external cable fuse protection, according to the technical data. Up to 31 device variants with serial diagnostics can be wired in series.

The user must evaluate and design the safety chain in accordance with the relevant standards and the required safety level. If multiple safety sensors are involved in the same safety function, the PFH values of the individual components must be added.

The entire concept of the control system, in which the safety component is integrated, must be validated to the relevant standards.

2.4 Technical Data

General data	
Standards	EN ISO 13849-1, EN ISO 14119, EN IEC 60947-5-3, EN IEC 61508
Coding	Standard coding (AZM201) Individual coding (AZM201-I1) Individual coding, multiple teaching (AZM201-I2)
Coding level according to EN ISO 14119	low (AZM201) high (AZM201-I1 / AZM201-I2)
Working principle	RFID
Frequency band RFID	125 kHz
Transmitter output RFID, maximum	-6 dBm
Housing material	Glass-fibre, reinforced thermoplastic
Duration of risk, maximum	200 ms
Reaction time, switching off safety outputs via actuator, maximum	100 ms
Reaction time, switching off safety outputs via safety inputs, maximum	1.5 ms
Safety classification	
Standards	EN ISO 13849-1, EN IEC 61508
Safety classification - Interlocking function	
Performance Level, up to	e

Category	4
PFH value	1.90 x 10^{-9} /h
PFD value	1.60 x 10^{-4}
Safety Integrity Level (SIL), suitable for applications in	3
Mission time	20 Year(s)
Safety classification - Guard locking function	
Performance Level, up to	d
Category	2
PFH value	1.00 x 10^{-8} /h
PFD value	8.90 x 10^{-4}
Safety Integrity Level (SIL), suitable for applications in	2
Mission time	20 Year(s)
Mechanical data	
Mechanical lifetime, minimum	1,000,000 Operations
Holding force F_{Zh} in accordance with EN ISO 14119	2,000 N
Note (clamping force F_{Zh})	1,000 N when used with the AZ/AZM201-B30 actuator, for indoor use.
Holding force F_{max}, maximum	2,600 N
Note (clamping force F_{max})	1,300 N when used with the AZ/AZM 201-B30 actuator, for indoor use.
Actuating speed, maximum	0.2 m/s
Type of the fixing screws	2x M6
Tightening torque of the fixing screws, maximum	8 Nm
Tightening torque of the fastening screws for the housing cover, minimum	0.7 Nm
Tightening torque of the fastening screws for the housing cover, maximum	1 Nm
Note	Torx T10
Latching force	30 N
Mechanical data - Connection technique	
Length of sensor chain, maximum	200 m
Note (length of the sensor chain)	Cable length and cross-section change the voltage drop dependiing on the output current
Note (series-wiring)	Unlimited number of devices, oberserve external line fusing, max. 31 devices in case of serial diagnostic SD
Termination	Spring pulley connection Screw terminals Connector M12, 8-pole Connector M23, 12-pole Connector M23, 8+1-pole
Allowed type of cable	solid single-wire solid multi-wire flexible
Cable section	0.25 mm² ... 1.5 mm² (All indications including the conductor ferrules.)
Wire cross-section	23 ... 15 AWG

Ambient conditions	
Ambient temperature	-25 ... +60 °C
Storage and transport temperature	-25 ... +85 °C
Relative humidity, maximum	93 %
Note (Relative humidity)	non-condensing non-icing
Resistance to vibrations	10 … 150 Hz, amplitude 0.35 mm
Restistance to shock	30 g / 11 ms
Protection class	III
Permissible installation altitude above sea level, maximum	2,000 m
Degree of protection	IP66, IP67
Ambient conditions - Insulation values	
Rated insulation voltage U_i	32 VDC
Rated impulse withstand voltage U_{imp}	0.8 kV
Overvoltage category	III
Degree of pollution	3
Electrical data	
Operating voltage	24 VDC -15 % / +10 % (stabilised PELV power supply)
No-load supply current I_0, typical	50 mA
Current consumption with magnet ON, average	200 mA
Current consumption with magnet ON, peak	700 mA / 100 ms
Rated operating voltage	24 VDC
Operating current	1,200 mA
Required rated short-circuit current	100 A
External wire and device fuse rating	2 A gG (AZM201-ST2) 3 A gG (AZM201-ST) 4 A gG (AZM201-SK / AZM201-CC) when used in accordance with UL 508
Time to readiness, maximum	4,000 ms
Switching frequency, maximum	1 Hz
Electrical data - Magnet control	
Designation, Magnet control	IN
Switching thresholds	-3 V … 5 V (Low) 15 V … 30 V (High)
Current consumption at 24 V	10 mA
Magnet switch-on time	100 %
Test pulse duration, maximum	5 ms
Test pulse interval, minimum	40 ms
Classification ZVEI CB24I, Sink	C0
Classification ZVEI CB24I, Source	C1 C2 C3
Electrical data - Safety digital inputs	
Designation, Safety inputs	X1 and X2
Switching thresholds	−3 V … 5 V (Low) 15 V … 30 V (High)
Current consumption at 24 V	5 mA
Test pulse duration, maximum	1 ms
Test pulse interval, minimum	100 ms
Classification ZVEI CB24I, Sink	C1

Classification ZVEI CB24I, Source	C1 C2 C3
Electrical data - Safety digital outputs	
Designation, Safety outputs	Y1 and Y2
Rated operating current (safety outputs)	250 mA
Design of control elements	short-circuit proof, p-type
Voltage drop U_d, maximum	2 V
Leakage current I_r, maximum	0.5 mA
Voltage, Utilisation category DC-13	24 VDC
Current, Utilisation category DC-13	0.25 A
Test pulse interval, typical	1000 ms
Test pulse duration, maximum	0.5 ms
Classification ZVEI CB24I, Source	C2
Classification ZVEI CB24I, Sink	C1 C2
Electrical data - Diagnostic outputs	
Designation, Diagnostic outputs	OUT
Operating current	50 mA
Design of control elements	short-circuit proof, p-type
Voltage drop U_d, maximum	4 V
Voltage, Utilisation category DC-13	24 VDC
Current, Utilisation category DC-13	0.05 A
Electrical data - Serial diagnostic SD	
Designation, Serial diagnostic SD	OUT
Operation current	150 mA
Design of control elements	short-circuit proof, p-type
Wiring capacitance	50 nF

Note about the safety classification

The safety classification of the guard locking function only applies for standard devices with monitored solenoid interlock AZM201Z-…-1P2PW-… (see Ordering code). A safety classification of the guard locking function for devices with serial diagnostics “SD2P” is not allowed due to the non-safe locking/unlocking signal from the SD Gateway

If for a certain application the power to unlock version of a solenoid interlock cannot be used, for this exception an interlock with power to lock can be used if additional safety measure need to be realised that have an equivalent safety level.

The safety analysis of the guard locking function refers to the component solenoid interlock AZM as part of the complete system.
On the customer side further measures such as safe actuation and safe cable installation to prevent faults are to be implemented.
In the event of a fault resulting in the unlocking of the guard locking, this is detected by the solenoid interlock and the safety gates Y1/Y2 switch off. When such a fault occurs the protection equipment may open immediately, just once, before the safe condition of the machine is reached. The system reaction of category 2 allows that a fault can occur between tests causing the loss of the safety function which is detected by the test.

The actuation of the interlock must be compared externally with the OSSD release. If a shut-down now occurs due to an unintentional unlocking this is detected by an external diagnostic.

UL notice

Use isolated power supply only.
For use in NFPA 79 applications.
Adapters providing field wiring means are available from the manufacturer. Refer to manufacturers information.

FCC/IC - Note

This device complies with part 15 of the FCC Rules and contains licence-exempt transmitter(s)/receiver(s) that comply with Innovation, Science and Economic Development Canada’s
licence-exempt RSS(s):

Operation is subject to the following two conditions:
(1) This device may not cause harmful interference, and
(2) this device must accept any interference received, including interference that may cause undesired operation.
This device complies with the Nerve Stimulation Exposure Limits (ISED SPR-002) for direct touch operations.
Changes or modifications not expressly approved by K.A. Schmersal GmbH & Co. KG could void the user’s authority to operate the euipment.

L’émetteur/récepteur exempt de licence contenu dans le présent appareil est conforme aux CNR d’Innovation, Sciences et Développement économique Canada applicables aux appareils radio exempts de licence. L’exploitation est autorisée aux deux conditions suivantes:
(1) L’appareil ne doit pas produire de brouillage.
(2) L’appareil doit accepter tout brouillage radioélectrique subi, même si le brouillage est susceptible d’en compromettre le fonctionnement.

Cet appareil est conforme aux limites d’exposition relatives à la stimulation des nerfs (ISED CNR-102) pour les opérations tactiles directes. Changements ou modifications non expressément approuvés par K.A. Schmersal GmbH & Co. KG pourrait annuler le droit de l’utilisateur à utiliser l’équipement

ANATEL-Notice

Este equipamento nao tem direito àprotecao contra interferência prejudicial e nao pode causar interferencia em sistemas devidamente autorizados.
Para maiores informacores consultar: **www.gov.br/anatel**

3. Mounting

3.1 General mounting instructions

Please observe the relevant requirements of the standards ISO 12100, ISO 14119 and ISO 14120.

For fitting the safety switch and the actuator, two mounting holes for M6 screws with washers (washers included in delivery) are provided. The safety switch must not be used as end stop. Any position is possible. The mounting position however must be chosen so that the ingress of dirt and soiling in the used opening is avoided. The unused actuator opening must be sealed by means of the dust-proof flap (included in delivery).

Minimum distance between two safety switchgear
as well as to other systems with same frequency (125 kHz): 100 mm.

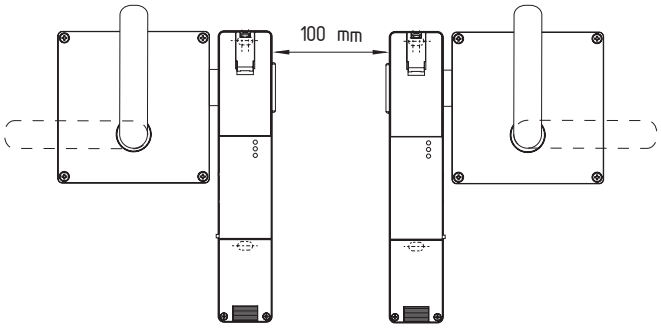

The solenoid interlock and the actuator must be aligned with each other in such a way that the actuator can move into the solenoid interlock without stress throughout the safety guard's entire service life.
A door catch can be used to prevent mechanical stress on the solenoid interlock and the actuator, e.g. caused by lowering the door.

Mounting of the actuators
Refer to the mounting instructions manual for the corresponding actuator.

The actuator must be permanently fitted to the safety guards and protected against displacement by suitable measures (tamperproof screws, gluing, drilling of the screw heads).

Manual release
For the machine set-up, the solenoid interlock can be unlocked in a de-energised condition. After opening of the plastic flap "A" (refer to image "Dimensions"), the triangular key must be turned clockwise to bring the blocking bolt in unlocking condition. The normal locking function is only restored after the triangular key has been returned to its original position.

Caution: do not turn beyond the latching point, maximum tightening torque: 1.3 Nm.

After being put into operation, the manual release must be secured by closing the plastic flap "A" and affixing the seal, which is included in delivery.

Component ready for operation	Component not ready for operation
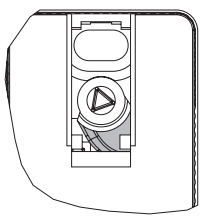	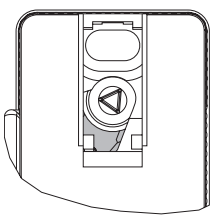

3.2 Dimensions
All measurements in mm.

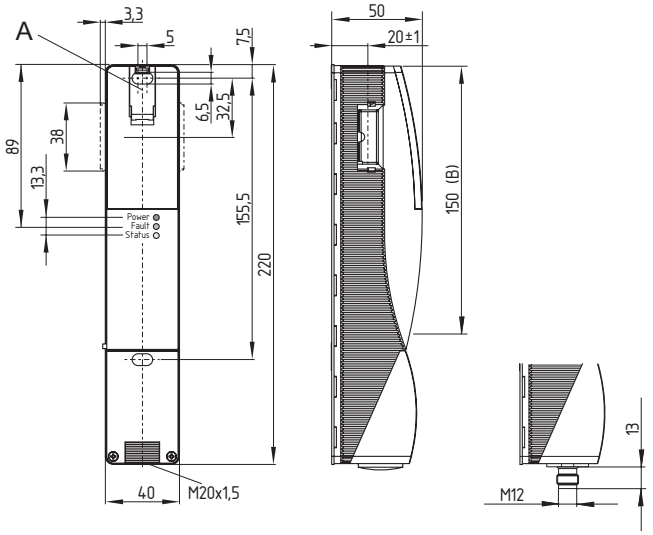

Legend
A: Manual release
B: Active RFID area

Metal parts and magnetic fields in the lateral RFID area of the safety switchgear and the actuator can influence the switching distance or lead to malfunctions.

3.3 Accessories
Retrofit kit for Manual release/Emergency exit

The retrofit kit is used for subsequent functional expansion of the solenoid interlock.

	Designation	Ordering code
Emergency release	RF-AZM200-N	103003543
Emergency Exit	RF-AZM200-T	103004966

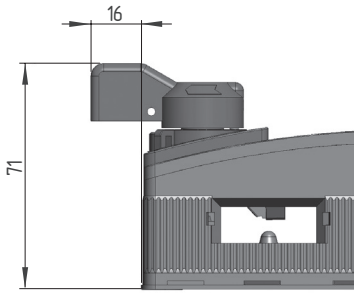

Lockout tag SZ201-2
(available as accessory, ordering code 103064844)

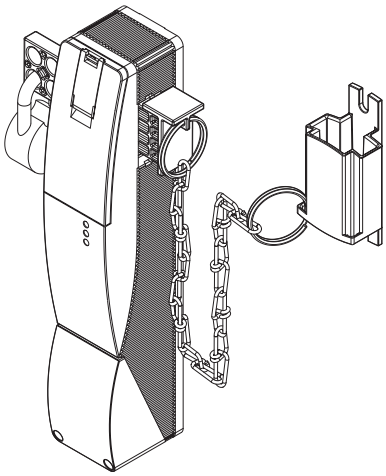

Lockout tag SZ200
(available as accessory, ordering code 101194438)

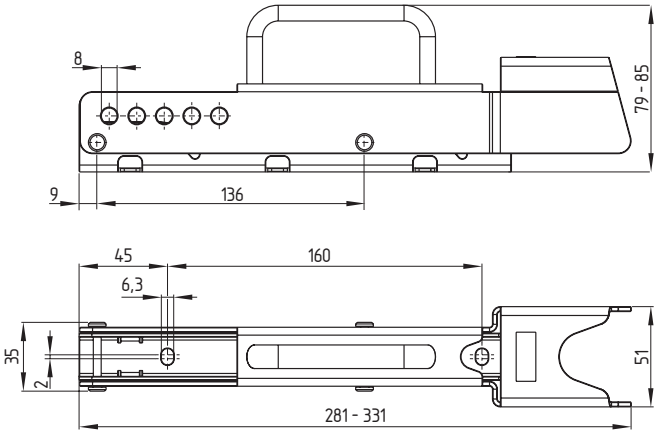

Mounting distance SZ200 to AZM201

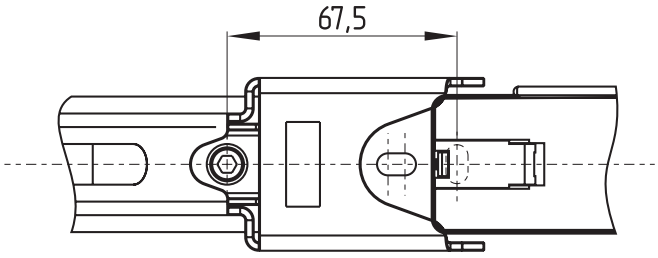

Application

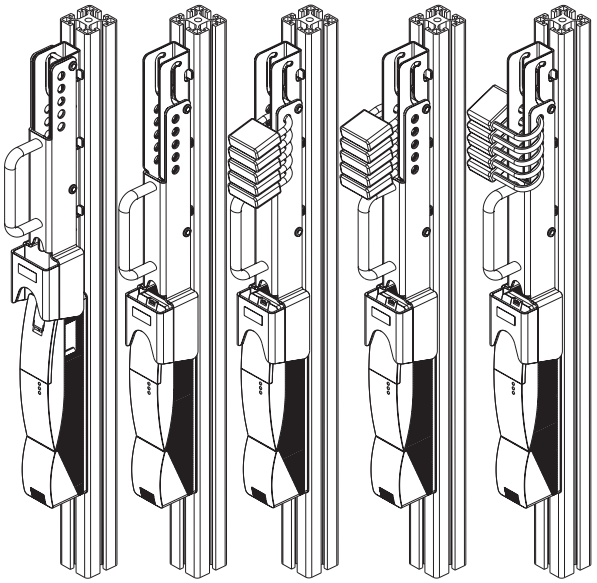

1 up to 5 padlocks with a maximum shackle diameter of 6 mm can be fixed. The padlocks are not included in the delivery.

4. Electrical connection

4.1 General information for electrical connection

The electrical connection may only be carried out by authorised personnel in a de-energised condition.

The power supply must have protection against permanent overvoltage. Supply units according to EN 60204-1 is recommended.

The required electrical cable fuse protection must be integrated in the installation.

The safety outputs can be integrated into the safety circuit of the control system.

Requirements for the connected safety-monitoring module:
Dual-channel safety input, suitable for 2 p-type semi-conductor outputs

Configuration of the safety-monitoring module
If the safety sensor is connected to electronic safety-monitoring modules, we recommend that you set a discrepancy time of min. 100 ms. The safety inputs of the safety-monitoring module must be able blanking a test impulse of approx. 1 ms. The safety-monitoring module does not need to have a cross-wire short monitoring function, if necessary, the cross-wire short monitoring function must be disabled.

Information for the selection of suitable safety-monitoring modules can be found in the Schmersal catalogues or in the online catalogue on the Internet: products.schmersal.com

4.2 Cable

The cable entry is realised by a metric M20 gland. This gland must be dimensioned by the user so that it is suitable for the cable used. A cable gland with strain relief and suitable IP degree of protection must be used.

Settle length x of the conductor:

- on screw terminals (SK): 8 mm
- on cage clamps (CC) of type s, r or f: 7.5 mm

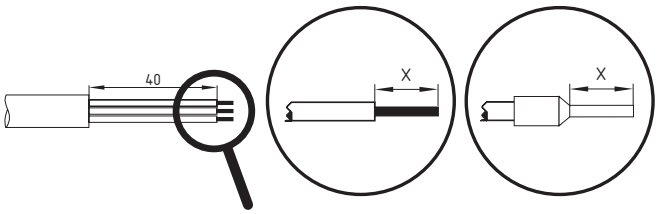

4.3 Serial diagnostic -SD

The fitted 24V, X1, X2 bridge is included in the delivery of …-1P2PW and …-SD2P.

On wiring SD devices, please pay attention to the voltage drop on the cables and the current carrying capacity of the individual components.

Accessories for the series-wiring
For convenient wiring and series-wiring of SD components, the SD junction boxes PFB-SD-4M12-SD (variant for the field) and PDM-SD-4CC-SD (variant for control cabinet on carrier rail) are available along with additional comprehensive accessories. Detailed information is available on the Internet, products.schmersal.com.

4.4 Wiring examples for series-wiring

Series-wiring can be set up. In the case of a series connection, the risk time remains unchanged and the reaction time increases by the sum of the reaction time of the inputs per additional unit specified in the technical data. The quantity of devices is only limited by the cable drops and the external cable fuse protection, according to the technical data. Series-wiring of up to 31 AZM201 … SD components with serial diagnostics is possible.

The application examples shown are suggestions. They however do not release the user from carefully checking whether the switchgear and its set-up are suitable for the individual application. The application examples shown are suggestions.

Wiring example 1: Series wiring AZM201 with conventional diagnostic output.
In the series wiring, the 24V-X1-X2 bridge must be removed from all components up to the last component. The voltage is supplied at both safety inputs of the terminal safety component of the chain (considered from the safety-monitoring module). The safety outputs of the first safety component are wired to the safety-monitoring module.

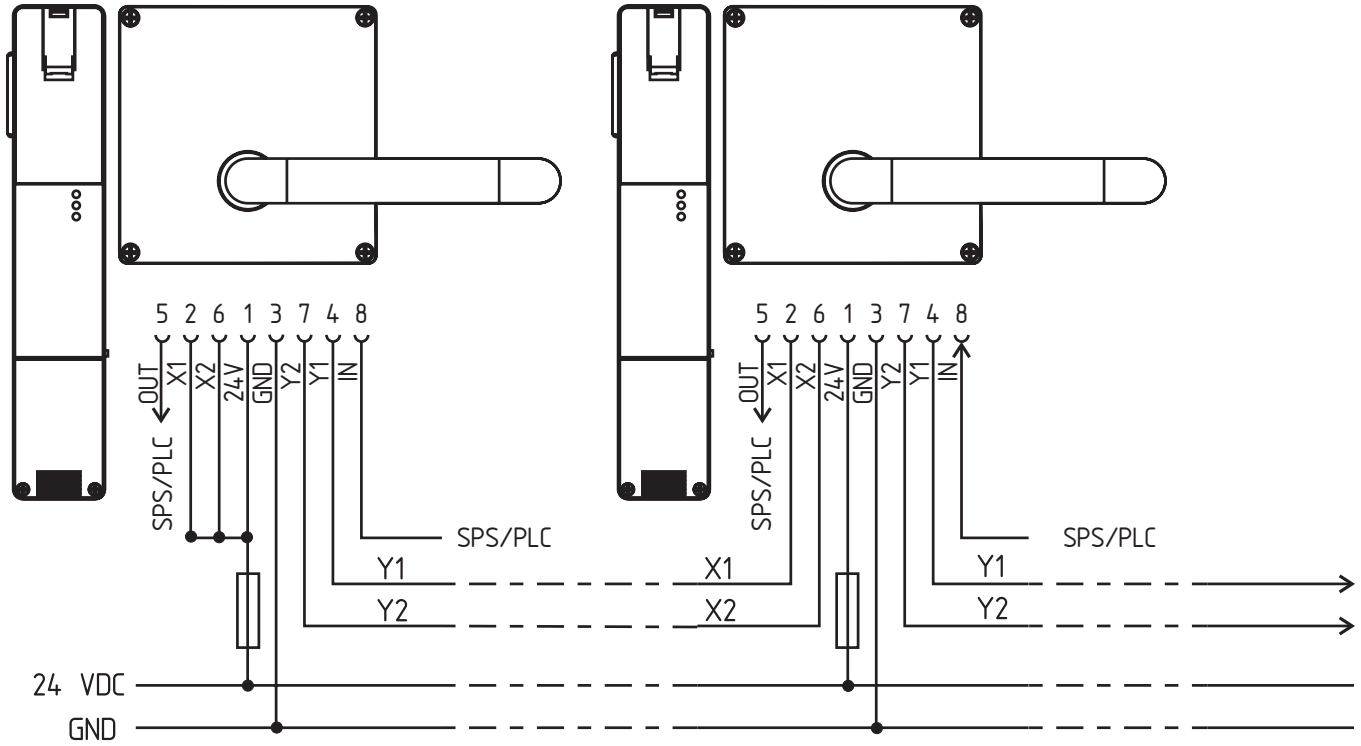

Y1 and Y2 = Safety outputs → Safety monitoring module

Wiring example 2: Series-wiring of the AZM201 with serial diagnostic function (max. 31 components in series)
In devices with the serial diagnostics function (ordering suffix -SD), the serial diagnostics connections are wired in series and connected to a SD-Gateway for evaluation purposes. The safety outputs of the first safety component are wired to the safety-monitoring module. The serial Diagnostic Gateway is connected to the serial diagnostic input of the first safety component.

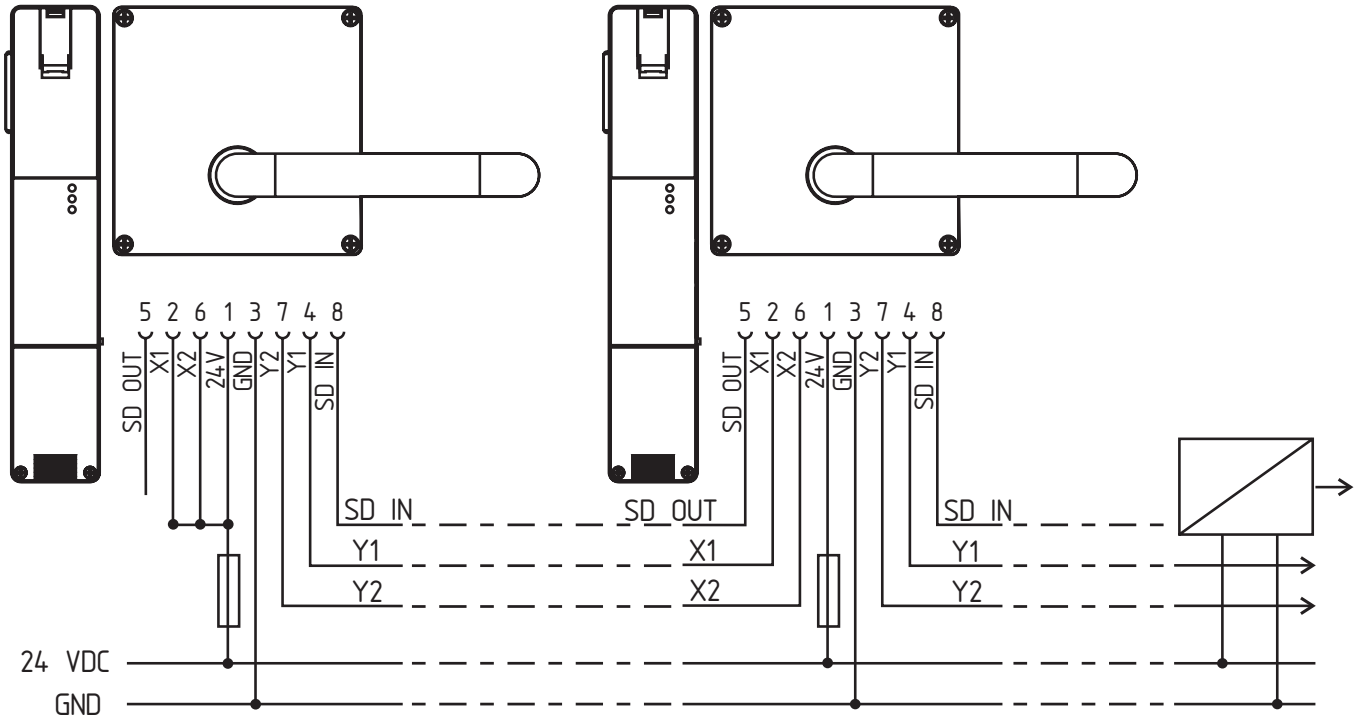

Y1 and Y2 = Safety outputs → Safety monitoring module
SD-IN → Gateway → Field bus

4.5 Wiring configuration and connector accessories

Function safety switchgear			Pin configu-rationof the connector ST2, M12, 8-pole	Configuration of the removable terminal blocks	Colour codes of the Schmersal connector plugs to DIN 47100	Poss. colour code of other commercial-ly available connector plugs according to EN 60947-5-2
	with conventional diagnostic output	with serial diagnostic function				
24V	Ue		1	1	WH	BN
X1	Safety input 1		2	2	BN	WH
GND	GND		3	5	GN	BU
Y1	Safety output 1		4	7	YE	BK
OUT	Diagnostic output	SD output	5	9	GY	GY
X2	Safety input 2		6	3	PK	PK
Y2	Safety output 2		7	8	BU	VT
IN	Magnet control	SD input	8	4	RD	OR
	without function		-	6		

View Terminal block for ordering suffix -SK or -CC					View Version with removable terminal blocks				
24V	24V	X1	X2	IN		1	2	3	4
AZM201.-.-.-1P2PW-.					AZM201.-.-.-1P2PW-.				
GND		Y1	Y2	OUT	5	6	7	8	9

24V	24V	X1	X2	IN
AZM201.-.-.-SD2P-.				
GND		Y1	Y2	OUT

Different pin assignment when using the Y distributor CSS-Y-8P Y for connection to the SD gateway.

Signal	PIN	Connector (2)	Color of wire			
			SCHMERSAL-cable	Cable to EN 60947-5-2	Cable to DIN 47100	
A1	1	U_e	BN	BN	WH	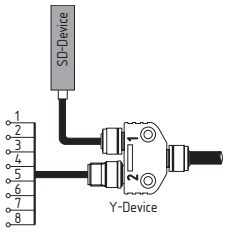
A1	2	U_e	WH	WH	BN	
A2	3	GND	BU	BU	GN	
A2	4	GND	BK	BK	YE	
Y1	5	Safety output 1	GY	GY	GY	
Y2	6	Safety output 2	VT	PK	PK	
IN	7	SD input	RD	VT	BU	
OUT	8	SD output	PK	OR	RD	

Connector accessories

Connecting cables (PUR) with coupling (female), M12, 8-pole - 8 x 0.25 mm² to DIN 47100, IP67 / IP69	
Cable length	**Ordering code**
2.5 m	103011415
5.0 m	103007358
10.0 m	103007359
15.0 m	103011414

5. Actuator teaching / actuator detection

Solenoid interlocks with standard coding are ready to use upon delivery.

Individually coded solenoid interlocks and actuators will require the following “teach-in” procedure:

1. Switch the solenoid interlock’s voltage supply off and back on.
2. Introduce the actuator in the detection range. The teach-in procedure is signalled at the solenoid interlock, green LED off, red LED on, yellow LED flashes (1 Hz).
3. After 10 seconds, brief yellow cyclic flashes (3 Hz) request the switch-off of the operating voltage of the solenoid interlock. (If the voltage is not switched off within 5 minutes, the solenoid interlock cancels the “teach-in” procedure and signals a false actuator by 5 red flashes.)
4. Once the operating voltage is switched back on, the actuator must be detected once more in order to activate the actuator code that has been taught in. In this way, the activated code is definitively saved.

For ordering suffix -I1, the executed allocation of safety switchgear and actuator is irreversible.

For ordering suffix -I2, the “teach-in” procedure for a new actuator can be repeated an unlimited number of times. When a new actuator is taught, the code, which was applicable until that moment, becomes invalid. Subsequent to that, an enabling inhibit will be active for ten minutes, thus providing for an increased protection against tampering. The green LED will flash until the expiration of the time of the enabling inhibit and the detection of the new actuator. In case of power failure during the lapse of time, the 10-minutes tampering protection time will restart.

6. Active principle and diagnostic functions

6.1 Magnet control

In the power to unlock version of the AZM201, the solenoid interlock is unlocked when the IN signal (= 24V) is set. In the power to lock version of the AZM201, the solenoid interlock is locked when the IN signal (= 24 V) is set.

6.2 Mode of operation of the safety outputs

In the standard AZM201 variant, the unlocking of the solenoid interlock causes the safety outputs to be disabled. The unlocked safety guard can be relocked as long as the actuator is inserted in the AZM201 solenoid interlock; in that case, the safety outputs are re-enabled.
It is not necessary to open the safety guard.

In the B-variant AZM201B, the opening of the safety guard causes the safety outputs to be disabled.

6.3 Diagnostic-LEDs

The solenoid interlock signals the operational state as well as errors through three coloured LED’s installed on the front side of the device.

green (Power)	Supply voltage on
yellow (Status)	Operating condition
red (Fault)	Error (see table 2: Error messages / flash codes red diagnostic LED)

6.4 Solenoid interlock with conventional diagnostic output

The short-circuit proof diagnostic output OUT can be used for central visualisation or control tasks, e.g. in a PLC.

The diagnostic output is not a safety-related output.

Error
Errors which no longer guarantee the function of the safety switchgear (internal errors) cause the safety outputs to be disabled within the duration of risk. After fault rectification, the error message is reset by opening and re-closing the corresponding safety guard.

Automatic, electronic locking takes place if more than one fault is detected at the safety outputs or a cross circuit is detected between Y1 and Y2. This means that normal fault acknowledgement is no longer possible. To reset this type of interlock, the solenoid interlock must be isolated from the supply voltage after elimination of the error causes.

Fault warning
A fault that does not immediately endanger the safety function of the safety switchgear (e.g. too high ambient temperature, safety output at external potential, cross-circuit) leads to delayed shutdown (see Table 2). This signal combination, diagnostic output disabled and safety channels still enabled, can be used to stop the production process in a controlled manner. An error warning is deleted when the cause of error is eliminated. If the fault warning remains on for 30 minutes, the safety outputs are also switched off (red LED flashes, see Table 2).

Behaviour of the diagnostic output (version ...-1P2PW)
(Example: power to unlock version)

Input signal magnet control

IN

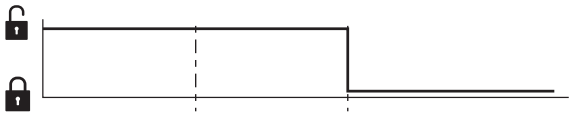

Normal sequence, door was locked

OUT

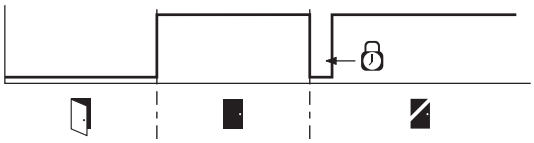

Door could not be locked or fault

OUT

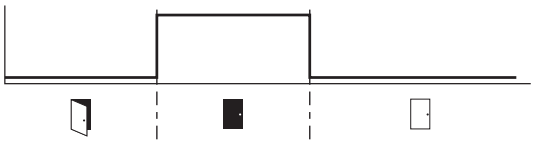

Key					
	Lock		Unlock		
	Door open		Safety guard closed		Locking time: 150 ... 250 ms, typically 200 ms
	Safety guard not locked or fault		Safety guard locked		

Evaluation of the diagnostic

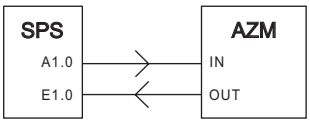

Power to unlock: IN = 0 = Lock

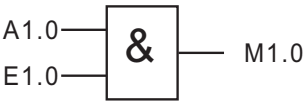

Safety guard can be locked

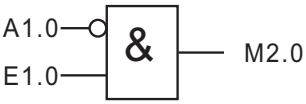

Safety guard locked

Power to lock: IN = 1 = Lock

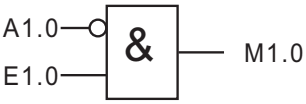

Safety guard can be locked

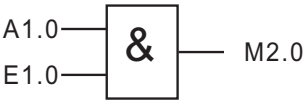

Safety guard locked

Table 1: Diagnostic information of the safety switchgear

System condition	Magnet control IN		LED			Safety outputs Y1, Y2		Diagnostic output OUT
	Power to unlock	Power to lock	green	red	yellow	AZM201Z	AZM201B	-1P2PW
Door open	24 V (0 V)	0 V (24 V)	On	Off	Off	0 V	0 V	0 V
Door closed, **actuator not inserted**	24 V	0 V	On	Off	Off	0 V	0 V	0 V
Door closed, actuator inserted, **not locked**	24 V	0 V	On	Off	Flashes	0 V	24 V	24 V
Door closed, actuator inserted, **interlocking blocked**	0 V	24 V	On	Off	Flashes	0 V	24 V	0 V
Door closed, actuator inserted and locked	0 V	24 V	On	Off	On	24 V	24 V	24 V
Error warning[1] solenoid interlock locked	0 V	24 V	On	Flashes [2]	On	24 V[1]	24 V[1]	0 V
Error	0 V (24 V)	24 V (0 V)	On	Flashes[2]/Off[1]	Off	0 V	0 V	0 V

Table 1: Diagnostic information of the safety switchgear								
System condition	Magnet control IN		LED			Safety outputs Y1, Y2		Diagnostic output OUT
	Power to unlock	Power to lock	green	red	yellow	AZM201Z	AZM201B	-1P2PW
Additionally for variant I1/I2:								
Teach-in procedure actuator started			Off	On	Flashes	0 V	0 V	0 V
Only I2: teach-in procedure actuator (release block)			Flashes	Off	Off	0 V	0 V	0 V

[1] after 30 min. disabling due to fault
[2] see flash code

Table 2: Error messages / flash codes red diagnostic LED			
Flash codes	Designation	Autonomous switch-off after	Error cause
1 flash pulse	Error (warning) at output Y1	30 min	Fault in output test or voltage at output Y1, although the output is disabled.
2 flash pulses	Error (warning) at output Y2	30 min	Fault in output test or voltage at output Y2, although the output is disabled.
3 flash pulses	Error (warning) cross-wire short	30 min	Cross-wire short between the output cables or fault at both outputs
4 flash pulses	Error (warning) temperature too high	30 min	The temperature measurement reveals an internal temperature that is too high
5 flash pulses	Actuator fault	0 min	Incorrect or defective actuator
6 flash pulses	Error actuator combination	0 min	An invalid combination of actuators was detected (blocking bolt detection or tamper attempt).
Continuous red signal	Internal fault / overvoltage or undervoltage fault	0 min	Device defective / supply voltage not within specifications

6.5 Differences in diagnostic behaviour -1P2P, -1P2PV

6.5.1 Behaviour of the diagnostic output AZM201...-1P2P

Diagnostic signal **OUT**: guard system **closed**

Input signal, magnet control (power to unlock version)

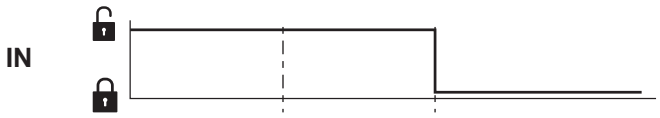

Normal sequence, door was locked

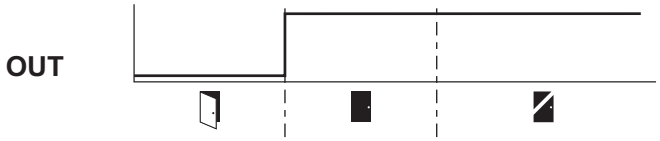

Locking blocked

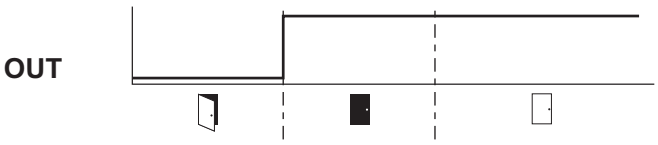

Error

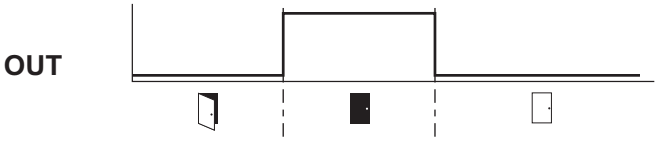

Key					
	Lock		Unlock		
	Safety guard open		Safety guard closed		Safety guard locked
	Unlock safety guard		Safety guard not locked or fault		

Table 1: Diagnostic information of the safety switchgear								
System condition	**Magnet control IN**		**LED**			**Safety outputs Y1, Y2**		**Diagnostic output OUT**
	Power to unlock	**Power to lock**	**green**	**red**	**yellow**	**AZM201Z**	**AZM201B**	**-1P2P**
Door open	24 V (0 V)	0 V (24 V)	On	Off	Off	0 V	0 V	0 V
Door closed, **actuator not inserted**	24 V	0 V	On	Off	Off	0 V	0 V	0 V
Door closed, actuator inserted, **not locked**	24 V	0 V	On	Off	Flashes	0 V	24 V	24 V
Door closed, actuator inserted, **interlocking blocked**	0 V	24 V	On	Off	Flashes	0 V	24 V	24 V
Door closed, actuator inserted and **locked**	0 V	24 V	On	Off	On	24 V	24 V	24 V
Error warning[1] solenoid interlock locked	0 V	24 V	On	Flashes[2]	On	24 V[1]	24 V[1]	0 V
Error	0 V (24 V)	24 V (0 V)	On	Flashes[2]	Off	0 V	0 V	0 V
Additionally for variant I1/I2:								
Teach-in procedure actuator started			Off	On	Flashes	0 V	0 V	0 V
Only I2: teach-in procedure actuator (release block)			Flashes	Off	Off	0 V	0 V	0 V

[1] after 30 min. disabling due to fault
[2] see flash code

6.5.2 Behaviour of the diagnostic output AZM201...-1P2PV

Diagnostic signal **OUT**: guard system **locked**

Input signal, magnet control (power to unlock version)

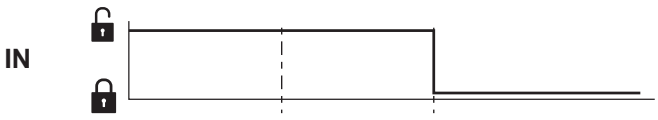

Normal sequence, door was locked

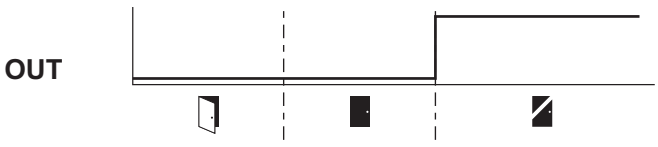

Locking blocked

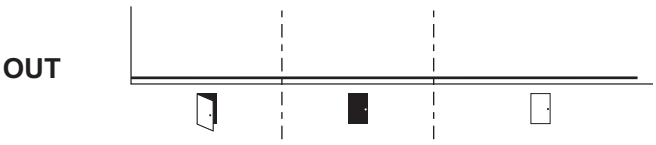

Error

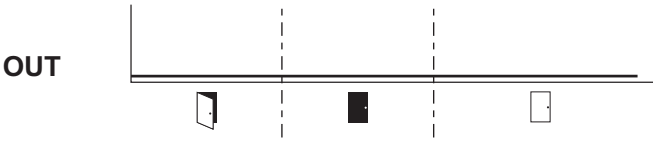

Key					
	Lock		Unlock		
	Safety guard open		Safety guard closed		Safety guard locked
	Unlock safety guard		Safety guard not locked or fault		

Table 1: Diagnostic information of the safety switchgear

System condition	Magnet control IN		LED			Safety outputs Y1, Y2		Diagnostic output OUT
	Power to unlock	Power to lock	green	red	yellow	AZM201Z	AZM201B	-1P2PV
Door open	24 V (0 V)	0 V (24 V)	On	Off	Off	0 V	0 V	0 V
Door closed, **actuator not inserted**	24 V	0 V	On	Off	Off	0 V	0 V	0 V
Door closed, actuator inserted, **not locked**	24 V	0 V	On	Off	Flashes	0 V	24 V	0 V
Door closed, actuator inserted, **interlocking blocked**	0 V	24 V	On	Off	Flashes	0 V	24 V	0 V
Door closed, actuator inserted and **locked**	0 V	24 V	On	Off	On	24 V	24 V	24 V
Error warning[1] solenoid interlock locked	0 V	24 V	On	Flashes[2]	On	24 V[1]	24 V[1]	24 V[1]
Error	0 V (24 V)	24 V (0 V)	On	Flashes[2]	Off	0 V	0 V	0 V
Additionally for variant I1/I2:								
Teach-in procedure actuator started			Off	On	Flashes	0 V	0 V	0 V
Only I2: teach-in procedure actuator (release block)			Flashes	Off	Off	0 V	0 V	0 V

[1] after 30 min. disabling due to fault
[2] see flash code

6.6 Solenoid interlock with serial diagnostic function SD

Solenoid interlocks with serial diagnostic cable have a serial input and output cable instead of the conventional diagnostic output. If solenoid interlocks are wired in series, the diagnostic data are transmitted through the series-wiring of the inputs and outputs.

Max. 31 solenoid interlocks can be wired in series. For the evaluation of the serial diagnostics line either the PROFIBUS-Gateway SD-I-DP-V0-2 or the Universal-Gateway SD-I-U-... are used. This serial diagnostic interface is integrated as slave in an existing field bus system. In this way, the diagnostic signals can be evaluated by means of a PLC.

The necessary software for the integration of the SD-Gateway is available for download at products.schmersal.com.

The response data and the diagnostic data are automatically and permanently written in an input byte of the PLC for each solenoid interlock in the series-wired chain. The request data for each solenoid interlock is transmitted to the component through an output byte of the PLC. In case of a communication error between the SD-gateway and the solenoid interlock, the switching condition of the solenoid interlock is maintained.

Error
Errors which no longer guarantee the function of the safety switchgear (internal errors) cause the safety outputs to be disabled within the duration of risk. The fault is reset, when the cause is eliminated and bit 7 of the request byte changes from 1 to 0 or the safety guard is opened. Faults at the safety outputs are only deleted upon the next release, as the fault rectification cannot be detected sooner.

Automatic, electronic locking takes place if more than one fault is detected at the safety outputs or a cross circuit is detected between Y1 and Y2. This means that normal fault acknowledgement is no longer possible. To reset this type of interlock, the solenoid interlock must be isolated from the supply voltage after elimination of the error causes.

Error warning
A fault that does not immediately endanger the safety function of the safety switchgear (e.g. too high ambient temperature, safety output at external potential, cross-circuit) leads to delayed shutdown. This signal combination, diagnostic output disabled and safety channels still enabled, can be used to stop the production process in a controlled manner.
An error warning is deleted when the cause of error is eliminated.
If the fault warning remains on for 30 minutes, the safety outputs are also switched off (red LED flashes).

Diagnostic error (warning)
If an error (warning) is signalled in the response byte, detailed fault information can be read out.

Table 3: I/O data and diagnostic data
(The described condition is reached, when Bit = 1)

Bit n°	Request byte	Response byte	Diagnostic error warning	Diagnostic error
Bit 0:	Magnet in, irrespective of power to lock or power to unlock principle	Safety output activated	Error output Y1	Error output Y1
Bit 1:	---	Actuator detected	Error output Y2	Error output Y2
Bit 2:	---	Actuator detected and locked	Cross-wire short	Cross-wire short
Bit 3:	---	---	Temperature too high	Temperature too high
Bit 4:	---	Input condition X1 and X2	---	Incorrect or defective actuator
Bit 5:	---	Guard door detected	Internal device error	Internal device error
Bit 6:	---	Error warning [1)]	Communication error between the field bus Gateway and the safety switchgear	---
Bit 7:	Error reset	Error (enabling path switched off)	Operating voltage too low	---

[1)] after 30 min -> fault

7. Set-up and maintenance

The safety function of the safety components must be tested. In the case of correct installation and adequate use, the safety switchgear features maintenance-free functionality. A regular visual inspection and functional test, including the following steps, is recommended:

1. Check fixation of the safety switch and the actuator.
2. Check max. axial misalignment of actuator and safety switch.
3. Fitting and integrity of the cable connections.
4. Check the switch enclosure for damages
5. Remove particles of dust and soiling.

Adequate measures must be taken to ensure protection against tampering either to prevent tampering of the safety guard, for instance by means of replacement actuators.

Damaged or defective components must be replaced.

8. Disassembly and disposal

8.1 Disassembly

The safety switchgear must be disassembled in a de-energised condition only.

8.2 Disposal

The safety switchgear must be disposed of in an appropriate manner in accordance with the national prescriptions and legislations.

9. Declaration of conformity

You can call up the declaration of conformity associated with the product using the QR code on the packaging.

10. Appendix – Special versions

10.1 Compact overview special versions

Special version	Description	Detailed information	Order information
2719, 2719-1, 2784	Only when used in combination with actuator unit AZ/AZM201...-2719/-2719-1/-2784. Extended detection range. The distance between the solenoid interlock and the actuator unit is 11.5 mm ± 1.5 mm. The actuator protrudes approx. 4.8 mm from the actuator housing.		see Schmersal webshop (2719 on request)
2794	Differences in diagnostic behaviour.	refer to 10.2	on request
2965-1	M23 connector, 12-pole Different pin assignment.	refer to 10.3	see Schmersal webshop
2965-2	Version ST: connector M23, 8+1-pole Version ST2: connector M12, 8-pole Different pin assignment.	refer to 10.4	see Schmersal webshop
2965-3	M12 connector, 8-pole Different pin assignment.	refer to 10.5	see Schmersal webshop
2965-4	M23 connector, 12-pole Different pin assignment.	refer to 10.6	on request
2965-5	M23 connector, 12-pole Different pin assignment.	refer to 10.7	on request
2965-6	M23 connector, 12-pole Different pin assignment.	refer to 10.8	on request
3030	Only in combination with actuator unit AZ/AZM201...-3030. Version with reduced latching force (F_{Zh} 1,500 N, F_{max} 1,950 N). Increased actuator tolerance in X direction (see below).	refer to 10.9	on request

10.2 Special version -2794

Table 1: Diagnostic information of the safety switchgear

System condition	Magnet control IN		LED			Safety outputs Y1, Y2		Diagnostic output OUT
	Power to unlock	Power to lock	green	red	yellow	AZM201Z	AZM201B	-1P2P-2794
Door open	24 V (0 V)	0 V (24 V)	On	Off	Off	0 V	0 V	24 V
Door closed, **actuator not inserted**	24 V	0 V	On	Off	Off	0 V	0 V	24 V
Door closed, actuator inserted, **not locked**	24 V	0 V	On	Off	Flashes	0 V	24 V	0 V
Door closed, actuator inserted, **interlocking blocked**	0 V	24 V	On	Off	Flashes	0 V	24 V	0 V
Guard closed, actuator inserted and **locked**	0 V	24 V	On	Off	On	24 V	24 V	0 V
Error warning[1] solenoid interlock locked	0 V	24 V	On	Flashes [2]	On	24 V[1]	24 V[1]	no change
Error	0 V (24 V)	24 V (0 V)	On	Flashes [2]	Off	0 V	0 V	24 V
Additionally for variant I1/I2:								
Teach-in procedure actuator started			Off	On	Flashes	0 V	0 V	24 V
Only I2: teach-in procedure actuator (release block)			Flashes	Off	Off	0 V	0 V	24 V

[1] after 30 min. disabling due to fault
[2] see flash code

10.3 Special version -2965-1

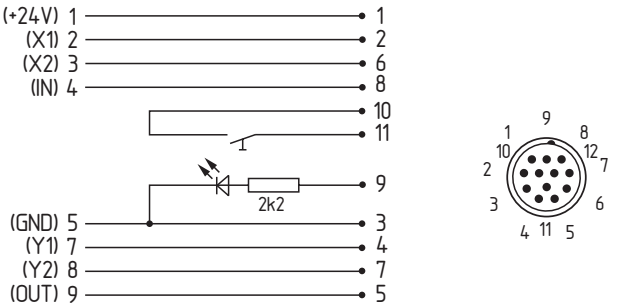

Connecting cables with coupling (female) IP67, M23, 12 pole - 12 x 0.75 mm²	
Cable length	**Ordering code**
5.0 m	101208520
10.0 m	103007354
20.0 m	101214418

10.4 Special version -2965-2

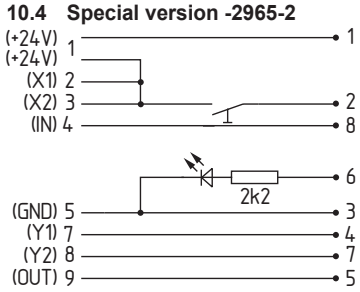



ST



ST2

Connecting cables with coupling (female) IP67, M23, 8+1 pole - 9 x 0.75 mm²	
Cable length	**Ordering code**
5.0 m	101209959
10.0 m	101209958
15.0 m	103001384

Connecting cables with coupling (female) IP67, M12, 8 pole - 8 x 0.25 mm²	
Cable length	**Ordering code**
2.5 m	103011415
5.0 m	103007358
10.0 m	103007359

10.5 Special version -2965-3

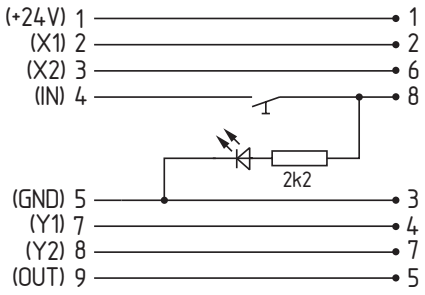

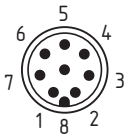

Connecting cables with coupling (female) IP67, M12, 8 pole - 8 x 0.25 mm²	
Cable length	**Ordering code**
2.5 m	103011415
5.0 m	103007358
10.0 m	103007359

10.6 Special version -2965-4

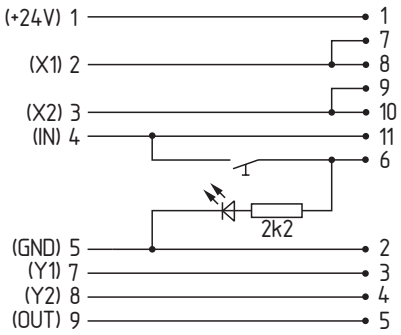

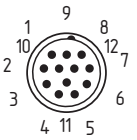

Connecting cables with coupling (female) IP67, M23, 12 pole - 12 x 0.75 mm²	
Cable length	**Ordering code**
5.0 m	101208520
10.0 m	103007354
20.0 m	101214418

10.7 Special version -2965-5

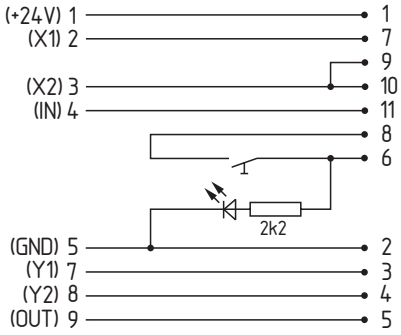

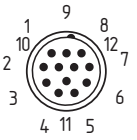

Connecting cables with coupling (female) IP67, M23, 12 pole - 12 x 0.75 mm²	
Cable length	**Ordering code**
5.0 m	101208520
10.0 m	103007354
20.0 m	101214418

10.8 Special version -2965-6

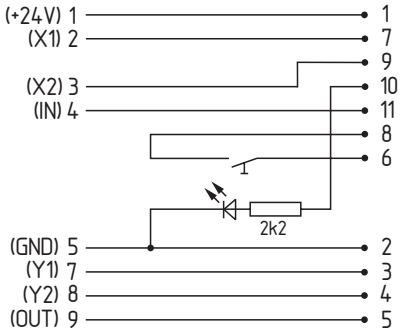

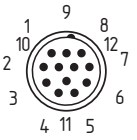

Connecting cables with coupling (female) IP67, M23, 12 pole - 12 x 0.75 mm²	
Cable length	**Ordering code**
5.0 m	101208520
10.0 m	103007354
20.0 m	101214418

10.9 Special version -3030

Increased actuator tolerance in X direction:

AZ/AZM201-B1-...-3030	
X = ± 3.0 mm Y = ± 5.0 mm Z = ± 1.0 mm	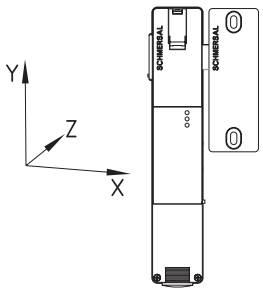

AZ/AZM201-B30-...-3030	
X = ± 3.0 mm Y = ± 5.0 mm Z = ± 1.0 mm	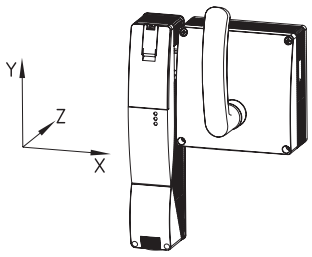

AZ/AZM201-B40-...-3030	
X = ± 3.0 mm Y = ± 5.0 mm Z = ± 1.0 mm	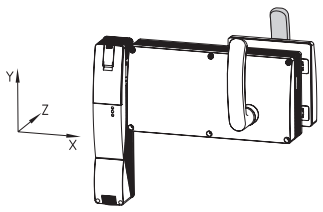

The special version -3030 is only intended for mounting the solenoid interlock AZM outside the hazardous area.

Mounting outside	
Right hinged door	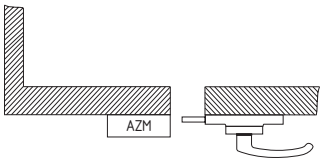
Left hinged door	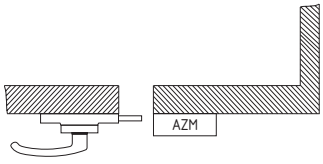

11. Contact

K.A. Schmersal GmbH & Co. KG
Möddinghofe 30, 42279 Wuppertal
Germany

Phone:	+49 202 6474-0
Telefax:	+49 202 6474-100
E-Mail:	info@schmersal.com
Internet:	www.schmersal.com

BA-Code: #V2 / 103064733 B