DATA SHEET

T 8313 EN

Type 3372 Electropneumatic Actuator

Application

Electropneumatic linear actuators for mounting on Type 3214 and Type 3260 Valves as well as Series V2001 Valves

Actuator area	**120 and 350 cm²**
Rated travel	**15 and 30 mm**



Fig. 1: *Type 3372 Actuator · 120 cm² actuator area · With Type 3725 Positioner (direct attachment)*



Fig. 3: *Type 3372 Actuator · 350 cm² actuator area · With Type 3725 Positioner (direct attachment)*



Fig. 2: *Type 3372 Actuator (120 cm²) with additional Type 4744-2 Limit Switch*

The Type 3372 Electropneumatic Actuator is available in the following versions:

- Version **with Type 3725 Positioner (direct attachment)**, **120 cm²** actuator area and 15 mm rated travel (Fig. 1)
- Version **with Type 3725 Positioner (direct attachment)**, **350 cm²** actuator area and 15 or 30 mm rated travel (Fig. 3)

The actuators are suitable for mounting on Series V2001 Valves (e.g. Type 3321, Type 3323, Type 3531, Type 3535) as well as Type 3214 and Type 3260 Valves. The actuators mainly consist of two diaphragm cases, a rolling diaphragm and internal springs. For throttling service, a Type 3725 Positioner is mounted to the rod-type yoke using a support element.

Further versions

- **Permissible operating temperatures from -35 to +90 °C**
- Version **ready for the attachment of a Series 3730 Positioner**, 120 cm² actuator area and 15 mm rated travel or 350 cm² actuator area and 15 or 30 mm rated travel
- **Explosion protection** for a mounted Type 3725 or Series 3730 Positioner according to the documentation of the positioner used (see Table 2)

SAMSON AKTIENGESELLSCHAFT
Weismüllerstraße 3 · 60314 Frankfurt am Main, Germany
Phone: +49 69 4009-0 · samson@samsongroup.com · www.samsongroup.com

Edition June 2025

Accessories

– **Type 4744-2 Limit Switch** (Fig. 2) · With explosion protection and IP rating according to the documentation of the limit switch (see Table 2) · Clamping plate can be used to mount it · See Data Sheet ▶ T 8367

Principle of operation

The positioner mounted on the Type 3372 Electropneumatic Actuator ensures a predetermined assignment of the valve position (controlled variable x) to the input signal (reference variable w). It compares the input signal received from a control system to the travel of the valve and issues a corresponding output signal pressure p_{st} (output variable y) for the actuator.

The signal pressure p_{st} creates the force $F = p_{st} \cdot A$ at the diaphragm surface A, which is opposed by the springs in the actuator. The bench range is determined by the number of actuator springs used and their compression, taking into account the rated travel. The travel H is proportional to the signal pressure p_{st}. The direction of action of the actuator stem depends on how the springs are installed in the actuator and the location of the signal pressure connection.

The stem connector clamps connect the actuator stem with the plug stem of the valve.

Further details on the principle of operation of the positioner:

– Type 3725 (see Data Sheet ▶ T 8394)
– Series 3730 (see Data Sheets ▶ T 8384-X or ▶ T 8484-X)

Tight-closing function

The electropneumatic actuator is completely filled with air or vented as soon as the reference variable falls below or exceeds a certain value.

Actuator stem extends (FA)

When the reference variable falls below the switching point of 4.08 mA, the actuator is fully vented. This causes a mounted globe valve to close. In three-way valves, port **B** is closed when the valve is used for mixing service and port **A** is closed when the valve is used for diverting service.

Actuator stem retracts (FE)

When the reference variable exceeds the switching point of 19.95 mA, the actuator is filled with air. This causes a mounted globe valve to close. In three-way valves, port **A** is closed when the valve is used for mixing service and port **B** is closed when the valve is used for diverting service.

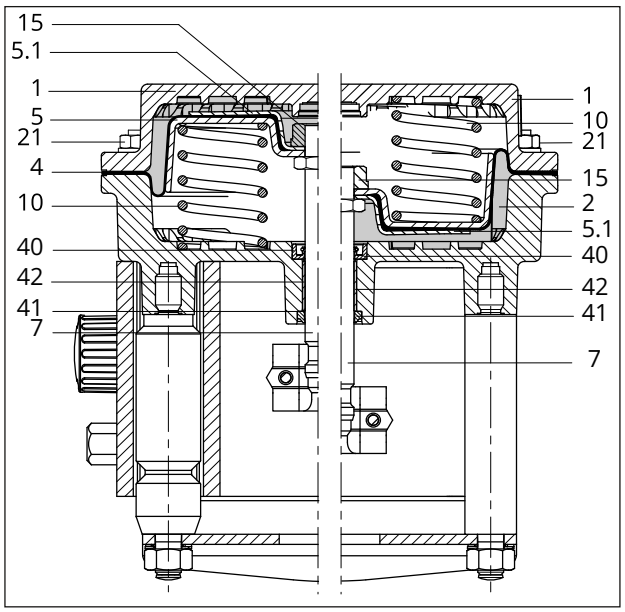

Fig. 4: *Type 3372 Electropneumatic Actuator with 120 cm² actuator area for the direct attachment of a Type 3725 Positioner*

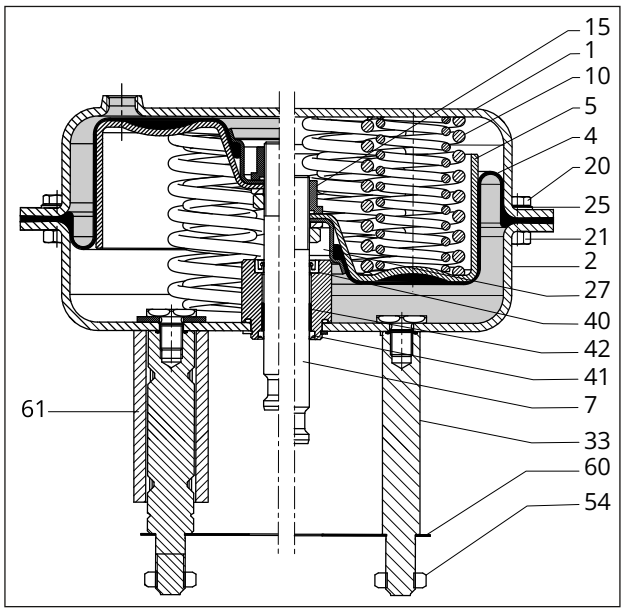

Fig. 5: *Type 3372 Electropneumatic Actuator with 350 cm² actuator area for the direct attachment of a Type 3725 Positioner*

Legend for Fig. 4 and Fig. 5

1, 2	Diaphragm case
4	Diaphragm
5	Diaphragm plate
7	Actuator stem
10	Spring
15	Collar nut
20	Hex bolt
21	Hex nut
25	Washer
27	Compressor
33	Rod
40	Radial shaft seal
41	Wiper ring
42	Plain bearing
54	Hex nut (for 33)
60	Plate
61	Support element

Table 1: *Technical data · Electric properties of Type 3372*

Type 3372 with Type 3725 Positioner (direct attachment)[1)]				
Actuator area		**120 cm²**	**350 cm²**	
Rated travel		**15 mm**	**15 mm**	**30 mm**
Function (mounted device)		Electropneumatic positioner with self-calibrating, automatic adaptation to valve and actuator		
Reference variable		4 to 20 mA (reverse polarity protection)		
Split-range operation		4 to 11.9 mA and 12.1 to 20 mA		
Static destruction limit		±33 V		
Minimum current		3.8 mA		
Load impedance		Max. 6.3 V		
Span adjustment		Self-adjusting		
Direction of action		Adjustable: increasing/increasing or increasing/decreasing		
Tight-closing function		w < 1 % and w > 99 %		
Operation		Can be individually activated or deactivated using capacitive keys (P9 or P10)		
Hysteresis		≤0.3 %		
Variable position		–		
Switching accuracy		–		
Air consumption in steady state		≤100 l_n/h with a supply pressure up to 6 bar and a signal pressure of 0.6 bar		
Air output capacity	Actuator (supply)	When Δp = 6 bar: 8.5 m_n^3/h When Δp = 1.4 bar: 3.0 m_n^3/h $K_{Vmax.}$ (20 °C) = 0.09		
	Actuator (exhaust)	When Δp = 6 bar: 14.0 m_n^3/h When Δp = 1.4 bar: 4.5 m_n^3/h $K_{Vmax.}$ (20 °C) = 0.15		
Temperature range[2)]		-25 to +80 °C[3)]		
Degree of protection		IP66[4)]		
Electropneumatic or pneumatic connection		Separate from actuator (in the positioner)		
Electromagnetic compatibility		Complying with EN 61000-6-2, EN 61000-6-3 and NE 21		
Display		With LED display		
Initialization		Automatic		
Operation		Using capacitive keys		
Zero calibration		Automatic (activated by P15 or P16)		
Associated documentation		▶ EB 8313-3, ▶ EB 8394 or ▶ T 8394		

1) Versions with Type 3730-x or Type 3731-x Positioner on request

2) Observe temperature limits of the mounted valve accessories (positioners etc).

3) -35 to +90 °C with Type 373x-x Positioner and metal cable glands

4) The pneumatic actuators do not pose any risk in the sense of the protection requirements described in EN 60529. The IP rating depends on the connecting parts used on the pressurized side and the spring chamber side of the actuator. In this case, components (vent plugs as well as valves accessories, such as solenoid valves, positioners etc.) must be used that comply with the requirements. See Application Notes ▶ AB 07 for the maximum rating that can be achieved with the standard vent plug. The Type 3725 or Series 3730 Positioners have an IP66 rating.

Explosion protection certificates for Type 3372 in combination with a positioner and any optionally mounted limit switch

NOTICE

The listed technical data for actuators used in hazardous areas may be further restricted by the limits specified in the test certificates of the positioner and any optionally mounted limit switch.

Table 2: *See documentation of the positioner used and any optionally mounted limit switch for the explosion protection certificates*

Mounted device	See the mounting and operating instructions for explosion protection certificates
Type 3725 Positioner	▶ EB 8394
Type 3730-0 Positioner	▶ EB 8384-0
Type 3730-4 Positioner	▶ EB 8384-4
Type 3730-5 Positioner	▶ EB 8384-5
Type 3730-6 Positioner	▶ EB 8384-6
TROVIS SAFE 3730-6 Positioner	▶ EB 8384-6S
TROVIS 3730-1 Positioner	▶ EB 8484-1
TROVIS 3730-3 Positioner	▶ EB 8484-3
Type 4744 Limit Switch	▶ EB 8367

Table 3: *Technical data for Type 3372*

Type 3372 with Type 3725 Positioner (direct attachment)								
Actuator area	**120 cm²**				**350 cm²**			
Rated travel	**15 mm**				**15 mm**		**30 mm**	
Pneumatic properties								
Tight-closing function	**Stem retracts (FE)**	**Stem retracts (FE)**	**Stem extends (FA)**	**Stem extends (FA)**	**Stem retracts (FE)**	**Stem extends (FA)**	**Stem retracts (FE)**	**Stem extends (FA)**
Bench range	0.4 to 1.4	1.4 to 2.3		2.1 to 3.3	1.5 to 2.1	2.1 to 2.7	1.5 to 2.7	2.2 to 3.8
Supply pressure	Max. 6 bar[1)]				Max. 6 bar			
Materials								
Actuator housing	Aluminum, powder coating				1.0332			
Diaphragm	NBR				NBR			
Actuator stem	1.4305				1.4401/1.4404			
Weight (without positioner)								
Approx. kg	3.3				15			
Mounting								
	Form B or form C (see Table 5)				Form C			

1) With “actuator stem extends” fail-safe action, the supply pressure must not exceed the upper bench range value by more than 1.5 bar.

Technical data of Type 4744-2 Limit Switch (see Data Sheet ▶ T 8367)

Table 4: *Bench ranges*

Actuator area in cm²	Rated travel in mm	Travel volume at rated travel in dm³	Bench range in bar (signal pressure range at rated travel)	Number of springs	Additional possible spring compression	Fail-safe action: actuator stem extends (FA)		Fail-safe action: actuator stem retracts (FE)				
						Spring force at 0 mm travel in kN	Spring force at rated travel in kN	Spring force in kN at rated travel and supply pressure of ... bar				
								2	3	4	5	6
120	15	1800	0.4 to 1.4	4	–	0.5	1.7	0.7	1.9	3.1	–	–
		1800	1.4 to 2.3	8		1.7	2.8	–	0.8	2	3.2	4.4
		1800	2.1 to 3.3	12		2.5	4.0	–	–	–	–	–
350	15	5250	1.5 to 2.1	8		–	–	–	3.15	6.65	6.65	6.65
		5250	2.1 to 2.7	6		7.35	9.5	–	–	–	–	–
	30	10500	1.5 to 2.7	8		–	–	–	1.05	4.55	8.05	11.55
		10500	2.2 to 3.8	12		7.7	13	–	–	–	–	–

Mounting types

There are two types of mounting depending on the valve/actuator combination: mounting using a crossbeam or rods.

When the actuator is mounted to the valve using a crossbeam (form B, see Fig. 6), the actuator is fastened to the valve bonnet using a central nut.

When the actuator is mounted on rods (form C, see Fig. 7) the actuator is connected to the valve bonnet using rods. In this case, a crossbeam is not required for mounting the actuator. A plate keeps the correct distance between rods on the version with 350 cm² actuator area (form C, see Fig. 8).

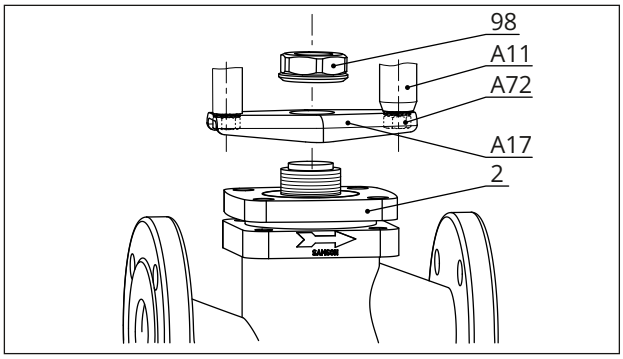

Fig. 6: *Mounting using crossbeam (form B)*

2 Valve bonnet
98 Central nut
A11 Rod
A17 Crossbeam
A72 Rod nut

Table 5: *Mounting types*

	Actuator area	120 cm²	350 cm²	
	Travel	15 mm	15 mm	30 mm
Valve type	Nominal size DN			
3321	15 to 50	Form B	–	–
3321	65 to 100	Form C	Form C	–
3321	100	–	–	Form C
3323	15 to 50	Form B	–	–
3323	65 to 80	Form C	Form C	–
3323	100	–	–	Form C
3531	15 to 80	Form B	–	–
3535	15 to 80	Form B	–	–
3214	65 to 100	Form B	–	–
3214	125 to 250	–	–	*)
3260	65 to 80	Form B	–	–
3260	100 to 150	–	–	Form B

*) On request

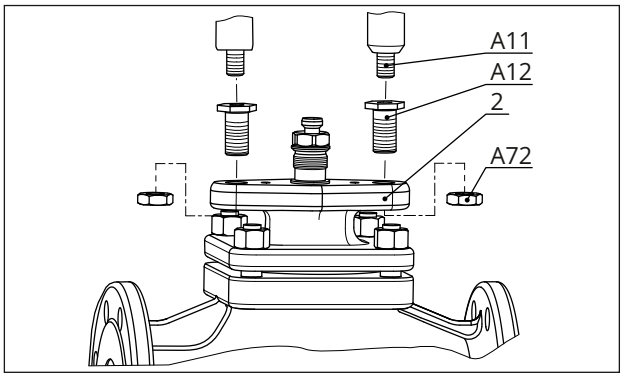

Fig. 7: *Mounting using rods (form C), 120 cm²*

2 Valve bonnet
A11 Rod
A12 Bushing
A72 Rod nut

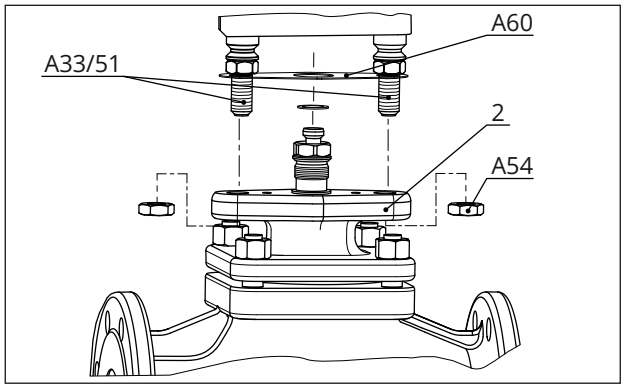

Fig. 8: *Mounting using rods (form C), 350 cm²*

2	Valve bonnet	A54	Rod nut
A33/51	Rod	A60	Plate

Dimensions

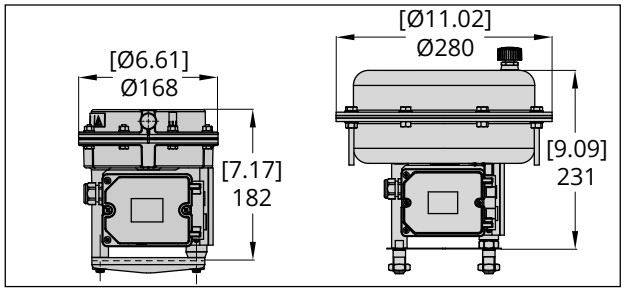

Fig. 9: *Specifications in mm [inch]*
Left: Type 3372/120 cm² with Type 3725 Positioner
Right: Type 3372/350 cm² with Type 3725 Positioner, fail-safe action: stem retracts/extends

Ordering text

Actuator	Type 3372
Mounting on the valve	Type ...
Actuator area	120 or 350 cm²
Travel	15 or 30 mm
Bench range	See Table 4
Direction of action	Actuator stem extends (FA) Actuator stem retracts (FE)
Valve accessories	e.g. Type 4744-2 Limit Switch