SICK.COM



DATA SHEET

WTB4-3P2161

W4
Photoelectric sensors

SICK
Sensor Intelligence



Illustration may differ

PHOTOELECTRIC SENSORS

WTB4-3P2161

ORDERING INFORMATION

Type	part no.
WTB4-3P2161	1028099

Further device versions and accessories at www.sick.com/W4

DETAILED TECHNICAL DATA

FEATURES

Functional principle	Photoelectric proximity sensor
Functional principle detail	Background suppression
Sensing range max.	4 mm ... 150 mm [1]
Sensing range	15 mm ... 150 mm [1]
Emitted beam	
Light source	PinPoint LED [2]
Type of light	Visible red light
Light spot size (distance)	Ø 7 mm (50 mm)
Key LED figures	
Wave length	650 nm
Adjustment	Potentiometer, 5 turns
Special applications	Detecting small objects

[1] Object with 90% remission (based on standard white, DIN 5033).

[2] Average service life: 100,000 h at T_U = +25 °C.

SAFETY-RELATED PARAMETERS

$MTTF_D$	1,187 years
DC_{avg}	0 %

ELECTRONICS

Supply voltage U_B	10 V DC ... 30 V DC [1]
Ripple	< 5 V_{pp} [2]
Current consumption	20 mA [3]
Protection class	III
Digital output	
Type	PNP
Switching mode	Light switching
Output current $I_{max.}$	≤ 100 mA
Response time	< 0.5 ms [4]
Switching frequency	1,000 Hz [5]
Circuit protection	A [6] C [7] D [8]

[1] Limit values.

[2] May not fall below or exceed U_v tolerances.

[3] Without load.

[4] Signal transit time with resistive load.

[5] With light/dark ratio 1:1.

[6] A = V_s connections reverse-polarity protected.

[7] C = interference suppression.

[8] D = outputs overcurrent and short-circuit protected.

MECHANICS

Housing	Rectangular
Design detail	Flat
Dimensions (W x H x D)	16 mm x 39.5 mm x 12 mm
Connection	Connector M8, 3-pin
Material	
Housing	Plastic, ABS
Front screen	Plastic, PMMA
Weight	30 g

AMBIENT DATA

Enclosure rating	IP67 IP66
Ambient operating temperature	–40 °C ... +60 °C
Ambient temperature, storage	–40 °C ... +75 °C
UL File No.	NRKH.E181493 & NRKH7.E181493

CONNECTION TYPE

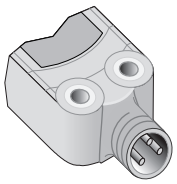

CONNECTION DIAGRAM CD-045

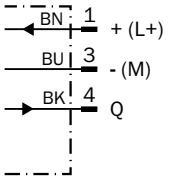

CHARACTERISTIC CURVE WTB4-3

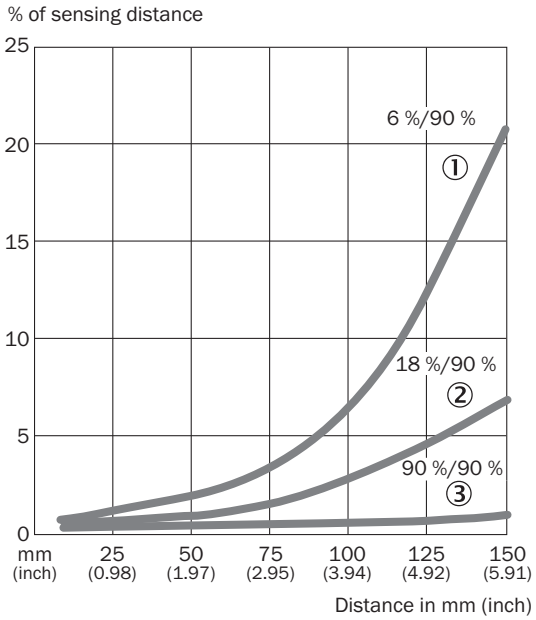

① Sensing range on black, 6% remission factor
② Sensing range on gray, 18% remission factor
③ Sensing range on white, 90% remission factor

SENSING RANGE DIAGRAM WTB4-3

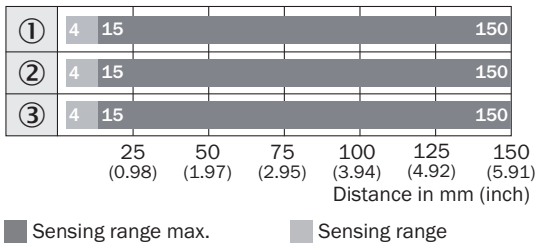

① Sensing range on black, 6% remission factor
② Sensing range on gray, 18% remission factor
③ Sensing range on white, 90% remission factor

DIMENSIONAL DRAWING WTX4-3, POTENTIOMETER

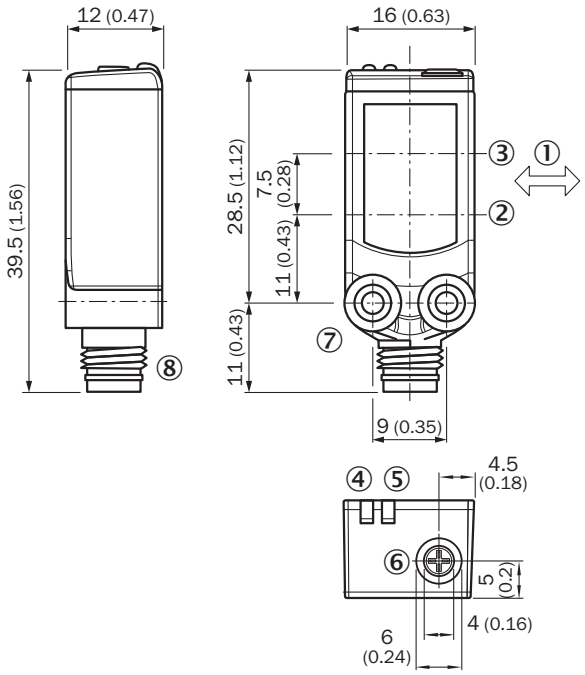

Dimensions in mm (inch)
① Standard direction of the material being detected
② Optical axis, sender
③ Optical axis, receiver
④ LED indicator yellow: Status of received light beam
⑤ LED indicator green: Supply voltage active
⑥ Potentiometer
⑦ Threaded mounting hole M3
⑧ Connection

Further information as well as suitable accessories, example applications and downloads such as CAD dimensional models, operating instructions and software can be found at www.sick.com/1028099

SICK AG
WALDKIRCH
GERMANY
SICK.COM

SICK AT A GLANCE

SICK is a leading global technology company for intelligent sensors and integrated solutions in industrial automation. Our technologies set benchmarks, making your industrial processes more efficient, safer and more sustainable – both in logistics and manufacturing operations.

SICK combines sensor intelligence with industry expertise and certified consulting services. We provide the ideal foundation for scalable as well as tailor-made automation solutions and create added value along the entire value chain. Our close partnerships with our customers are more than just a promise: Together, we optimize productivity, improve quality, protect health and safety, and help build a sustainable future. All with empathy and trust.

Since 1946, we have been developing innovative technologies with passion and a pioneering spirit. With a global network in around 40 countries, SICK has a global presence and is always close by. The company's headquarters are located in Waldkirch near Freiburg, Germany. Our customers benefit from our understanding of both local and global requirements, which enables us to deliver tailor-made solutions

SICK

Sensor Intelligence