SICK.COM



DATA SHEET

TiM561-2050101

TiM
2D LiDAR sensors

SICK Sensor Intelligence



2D LIDAR SENSORS

TiM561-2050101

ORDERING INFORMATION

Type	part no.
TiM561-2050101	1071419

Further device versions and accessories at www.sick.com/TiM

DETAILED TECHNICAL DATA

FEATURES

Application	Outdoor, Indoor
Measurement principle	HDDM$^+$
Light source	Infrared (850 nm)
Laser class	1 (IEC 60825-1:2014, EN 60825-1:2014+A11:2021)
Aperture angle	
Horizontal	270°
Scanning frequency	15 Hz
Angular resolution	
Horizontal	0.33°
Working range	0.05 m ... 10 m
Scanning range	
At 10% remission factor	8 m
$MTTF_D$	100 years

MECHANICS/ELECTRONICS

Connection type	1 x “Ethernet” connection, 4-pin M12 female connector 1 x connection “Power/Synchronization output” 5-pin, M12 male connector 1 x Micro USB female connector, type B
Supply voltage	9 V DC ... 28 V DC
Power consumption	Typ. 4 W
Output current	≤ 100 mA
Housing color	Gray (RAL 7032)
Enclosure rating	IP67, applies only when the plastic cover of the “Aux interface” is closed (IEC 60529:1989+AMD1:1999+AMD2:2013)
Protection class	III (IEC 61140:2016-1)
Weight	250 g, without connecting cables
Dimensions (L x W x H)	60 mm x 60 mm x 86 mm
MTBF	> 100 years

PERFORMANCE

Response time	1 scan, typ. 67 ms 2 scans, ≤ 134 ms [1]
Detectable object shape	Almost any
Systematic error	± 60 mm [2]
Statistical error	< 20 mm [2]
Integrated application	Output of measurement data

[1] At +45° to +225° of the working range; max. 150 ms at –45° to +45° of the working range.

[2] Typical value at 90% remission factor up to maximum scanning range; real value depends on ambient conditions.

INTERFACES

Ethernet	✓, TCP/IP
USB	✓
Remark	Micro USB
Function	Service interface, parameterization
Digital inputs/outputs	
Inputs	0
Outputs	1 (PNP, "SYNC"/"device ready")
Optical indicators	2 LEDs (ON, "device ready")

AMBIENT DATA

Remission factor	4 % ... 1,000 % (reflectors)
Electromagnetic compatibility (EMC)	
Emitted radiation	Residential area (EN 61000-6-3:2007+AMD:A1:2011)
Electromagnetic immunity	Industrial environment (EN 61000-6-2:2005)
Vibration resistance	
Sine resonance scan	10 Hz ... 1,000 Hz [1]
Sine test	10 Hz ... 500 Hz, 5 g, 10 frequency cycles [1]
Noise test	10 Hz ... 250 Hz, 4.24 g RMS, 5 h [2]
Shock resistance	50 g, 11 ms, ± 3 single shocks/axis [3] 25 g, 6 ms, ± 1,000 continuous shocks/axis [3] 50 g, 3 ms, ± 5,000 continuous shocks/axis [3]
Ambient operating temperature	–25 °C ... +50 °C [4]
Storage temperature	–40 °C ... +75 °C [4]
Temperature change	–25 °C ... +50 °C, 10 cycles [5]
Damp heat	+25 °C ... +55 °C, 95 % RH, 6 cycles [6]
Relative humidity	
Operation	< 80 %, Non-condensing (EN 60068-2-30:2005)
Storage	≤ 95 %, Non-condensing (EN 60068-2-30:2005)
Ambient light immunity	80,000 lx

[1] IEC 60068-2-6:2007.

[2] IEC 60068-2-64:2008.

[3] IEC 60068-2-27:2008.

[4] IEC 60068-2-14:2009.

[5] EN 60068-2-14:2009.

[6] EN 60068-2-30:2005.

GENERAL NOTES

Note on use	The sensor does not constitute a safety component as defined by relevant legislation on machine safety.

CERTIFICATES

EU declaration of conformity	✓
UK declaration of conformity	✓
ACMA declaration of conformity	✓
China RoHS	✓
cTUVus certificate	✓
Information according to Art. 3 of Data Act (Regulation EU 2023/2854)	✓

DIMENSIONAL DRAWING

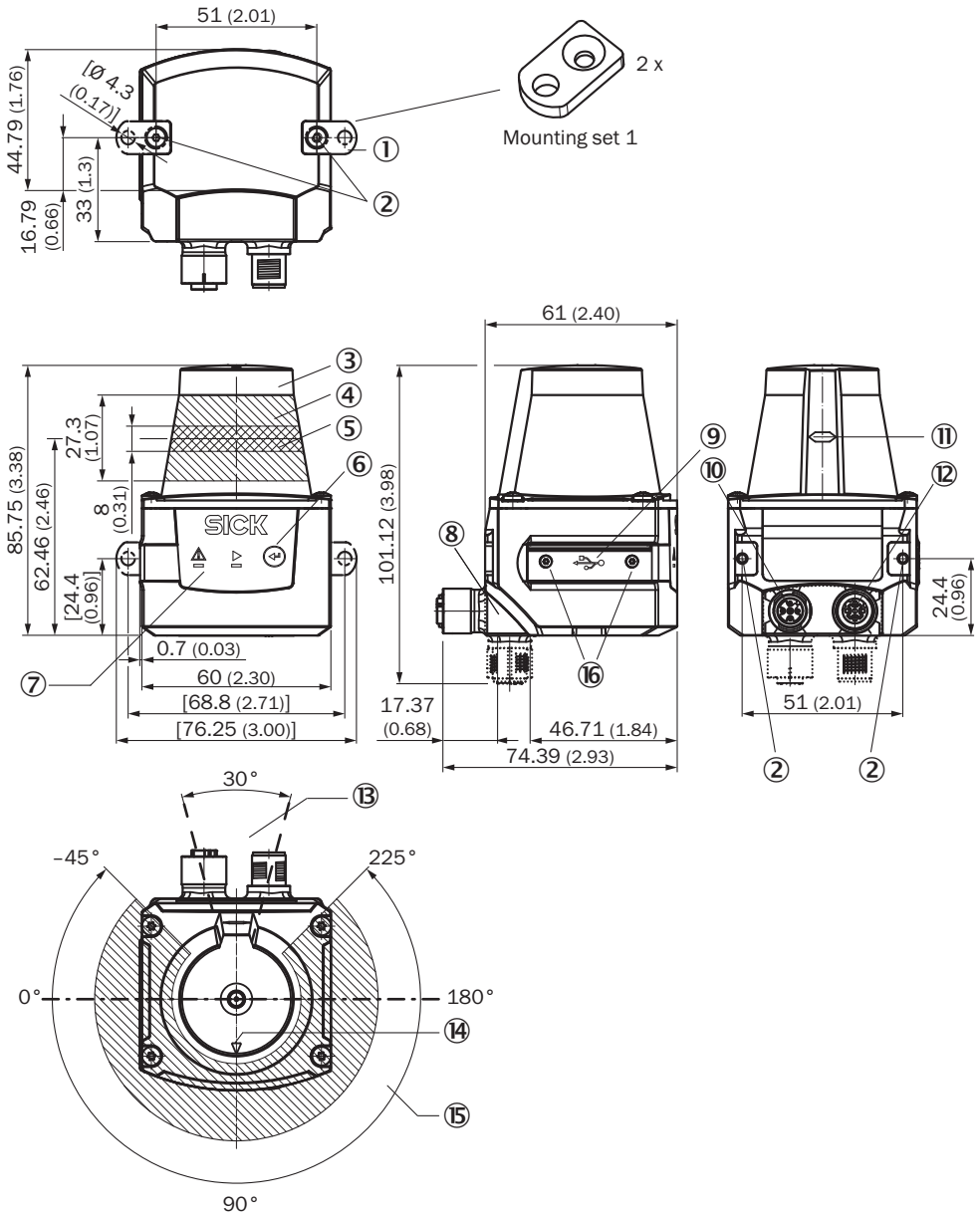

Dimensions in mm (inch)
① 2 x straight plates with M3 x 4 mm screw (included in delivery)
② M3 threaded mounting hole, 2.8 mm deep (blind hole thread), max. tightening torque 0.8 Nm
③ Optical hood
④ Receiving range (light inlet)
⑤ Transmission range (light emission)
⑥ push-button (no function)
⑦ Red and green LED (status displays)
⑧ swivel connector unit
⑨ Micro USB female connector, type B
⑩ connection “Power/Synchronization output” 5-pin, M12 male connector
⑪ Marking for the position of the light emission level
⑫ “Ethernet” connection, 4-pin M12 female connector
⑬ Area in which no reflective surfaces are allowed for mounted devices
⑭ Bearing marking to support alignment (90° axis)
⑮ Aperture angle 270° (scanning angle)
⑯ 2 x countersunk screw (Torx TX 6) M2 x 4 mm

WORKING RANGE DIAGRAM

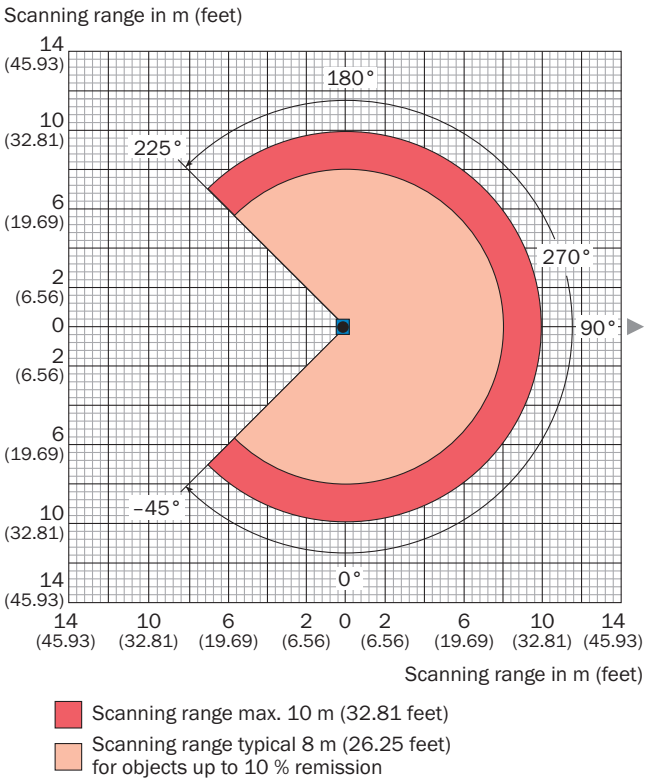

CONNECTION TYPE ETHERNET

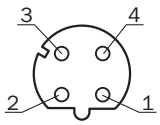

M12 female connector, 4-pin, D-coded
① TX+
② RX+
③ TX-
④ RX-

PIN ASSIGNMENT POWER

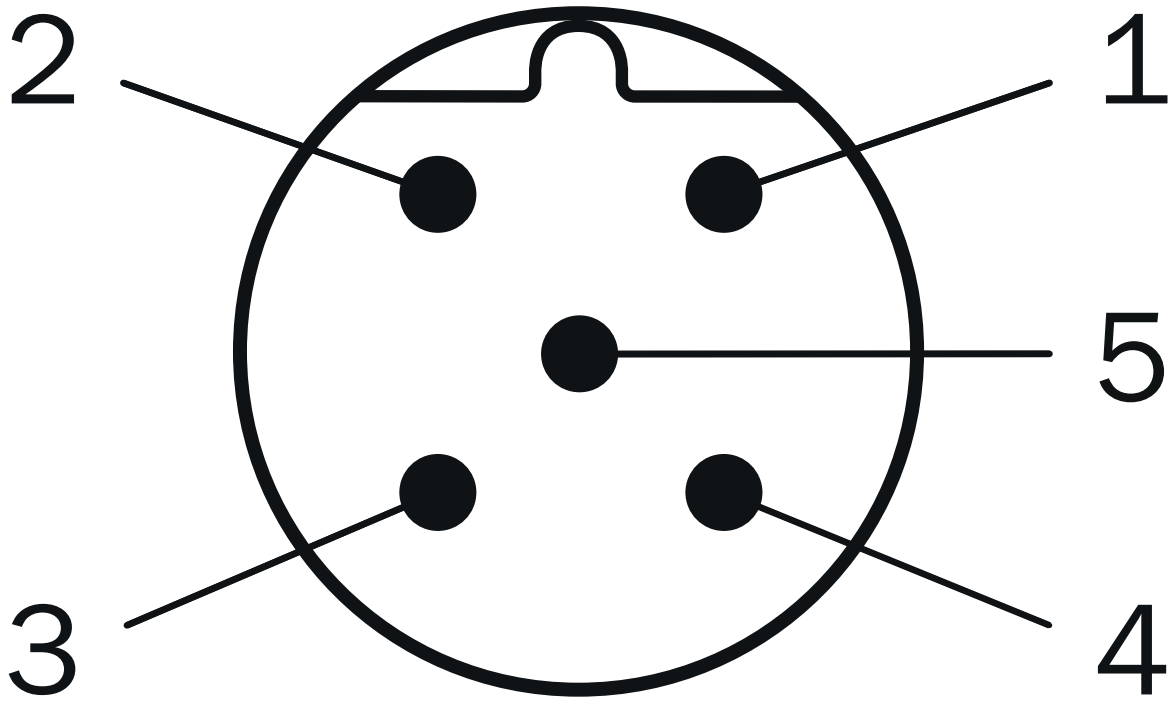

Connector M12, 5-pin, A-coded
① DC 9 V ... 28 V
② "SYNC"/"device ready"
③ GND
④ nc
⑤ nc

Further information as well as suitable accessories, example applications and downloads such as CAD dimensional models, operating instructions and software can be found at www.sick.com/1071419

SICK AG
WALDKIRCH
GERMANY
SICK.COM

SICK AT A GLANCE

SICK is a leading global technology company for intelligent sensors and integrated solutions in industrial automation. Our technologies set benchmarks, making your industrial processes more efficient, safer and more sustainable – both in logistics and manufacturing operations.

SICK combines sensor intelligence with industry expertise and certified consulting services. We provide the ideal foundation for scalable as well as tailor-made automation solutions and create added value along the entire value chain. Our close partnerships with our customers are more than just a promise: Together, we optimize productivity, improve quality, protect health and safety, and help build a sustainable future. All with empathy and trust.

Since 1946, we have been developing innovative technologies with passion and a pioneering spirit. With a global network in around 40 countries, SICK has a global presence and is always close by. The company's headquarters are located in Waldkirch near Freiburg, Germany. Our customers benefit from our understanding of both local and global requirements, which enables us to deliver tailor-made solutions

SICK

Sensor Intelligence