SICK.COM



DATA SHEET

IME08-02BPSZT0K

IME
Inductive proximity sensors

SICK
Sensor Intelligence



Illustration may differ

INDUCTIVE PROXIMITY SENSORS

IME08-02BPSZT0K

ORDERING INFORMATION

Type	part no.
IME08-02BPSZT0K	1040869

Further device versions and accessories at www.sick.com/IME

DETAILED TECHNICAL DATA

FEATURES

Housing	Metric
Housing	Short-body
Thread size	M8 x 1
Diameter	Ø 8 mm
Sensing range S_n	2 mm
Safe sensing range S_a	1.62 mm
Installation type	Flush
Switching frequency	4,000 Hz
Connection type	Connector M8, 3-pin
Switching output	PNP
Switching output detail	PNP
Output function	NO
Electrical wiring	DC 3-wire
Enclosure rating	IP67 [1]
Items supplied	Mounting nut, steel, nickel-plated (2 x)

[1] According to EN 60529.

MECHANICS/ELECTRONICS

Supply voltage	10 V DC ... 30 V DC
Ripple	≤ 10 %
Voltage drop	≤ 2 V [1]
Time delay before availability	≤ 100 ms

[1] At I_a max.

[2] Supply voltage U_B and constant ambient temperature Ta.

[3] Of Sr.

Hysteresis	5 % ... 15 %
Reproducibility	≤ 2 % [2] [3]
Temperature drift (of S_r)	± 10 %
EMC	According to EN 60947-5-2
Continuous current I_a	≤ 200 mA
No load current	≤ 10 mA
Short-circuit protection	✓
Power-up pulse protection	✓
Shock and vibration resistance	30 g, 11 ms/10 Hz ... 55 Hz, 1 mm
Ambient operating temperature	–25 °C ... +75 °C
Housing material	Brass, nickel-plated
Sensing face material	Plastic, PA 66
Housing length	41 mm
Thread length	25 mm
Tightening torque, max.	≤ 5 Nm
UL File No.	NRKH.E181493

[1] At I_a max.

[2] Supply voltage U_B and constant ambient temperature Ta.

[3] Of Sr.

SAFETY-RELATED PARAMETERS

$MTTF_D$	1,735 years
DC_{avg}	0 %

REDUCTION FACTORS

Note	The values are reference values which may vary
St37 steel (Fe)	1
Stainless steel (V2A, 304)	Approx. 0.8
Aluminum (Al)	Approx. 0.45
Copper (Cu)	Approx. 0.4
Brass (Br)	Approx. 0.4

INSTALLATION NOTE

Remark	Associated graphic see "Installation note"
B	16 mm
C	8 mm
D	6 mm
F	16 mm

CERTIFICATES

EU declaration of conformity	✓
UK declaration of conformity	✓
ACMA declaration of conformity	✓
Moroccan declaration of conformity	✓
China RoHS	✓

China Compulsory Product Certification (CCC) exempt	✓
cULus certificate	✓

INSTALLATION NOTE FLUSH INSTALLATION

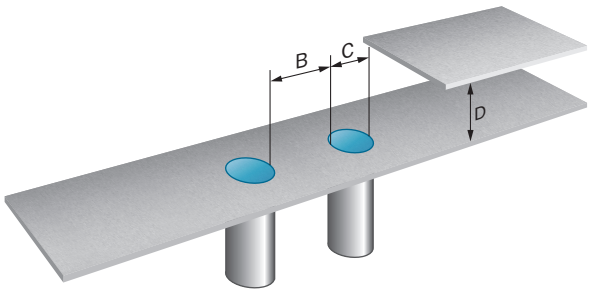

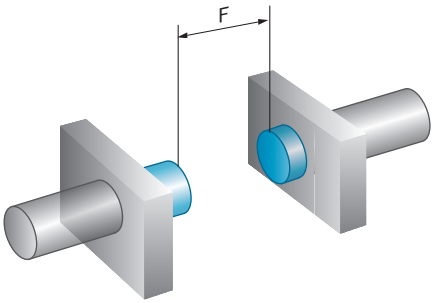

CONNECTION DIAGRAM CD-002

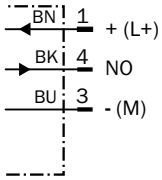

DIMENSIONAL DRAWING IME08 SHORT-BODY HOUSING, CONNECTOR, FLUSH

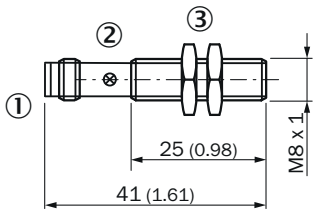

Dimensions in mm (inch)
① Connection
② Display LED
③ Fastening nuts (2x); width across 13, metal

Further information as well as suitable accessories, example applications and downloads such as CAD dimensional models, operating instructions and software can be found at www.sick.com/1040869

SICK AG
WALDKIRCH
GERMANY
SICK.COM

SICK AT A GLANCE

SICK is a leading global technology company for intelligent sensors and integrated solutions in industrial automation. Our technologies set benchmarks, making your industrial processes more efficient, safer and more sustainable – both in logistics and manufacturing operations.

SICK combines sensor intelligence with industry expertise and certified consulting services. We provide the ideal foundation for scalable as well as tailor-made automation solutions and create added value along the entire value chain. Our close partnerships with our customers are more than just a promise: Together, we optimize productivity, improve quality, protect health and safety, and help build a sustainable future. All with empathy and trust.

Since 1946, we have been developing innovative technologies with passion and a pioneering spirit. With a global network in around 40 countries, SICK has a global presence and is always close by. The company's headquarters are located in Waldkirch near Freiburg, Germany. Our customers benefit from our understanding of both local and global requirements, which enables us to deliver tailor-made solutions

SICK

Sensor Intelligence