SICK.COM

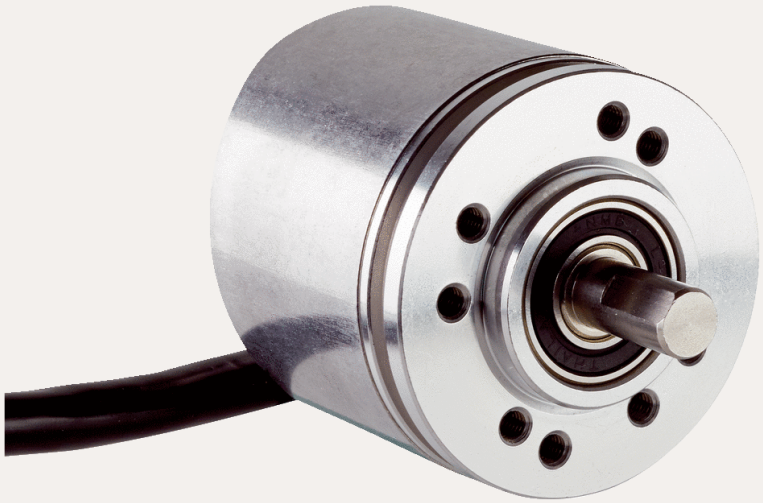

DATA SHEET

DBS36E-S3EK01024

DBS36/50
Incremental encoders

SICK Sensor Intelligence



Illustration may differ

INCREMENTAL ENCODERS

DBS36E-S3EK01024

ORDERING INFORMATION

Type	part no.
DBS36E-S3EK01024	1060545

Further device versions and accessories at www.sick.com/DBS36_50

DETAILED TECHNICAL DATA

SAFETY-RELATED PARAMETERS

$MTTF_D$ (mean time to dangerous failure)	600 years (EN ISO 13849-1) [1]

[1] This product is a standard product and does not constitute a safety component as defined in the Machinery Directive. Calculation based on nominal load of components, average ambient temperature 40°C, frequency of use 8760 h/a. All electronic failures are considered hazardous. For more information, see document no. 8015532.

PERFORMANCE

Pulses per revolution	1,024
Measuring step	90°, electric/pulses per revolution
Measuring step deviation	± 18° / pulses per revolution
Error limits	± 54° / pulses per revolution
Duty cycle	≤ 0.5 ± 5 %

INTERFACES

Communication interface	Incremental
Communication Interface detail	HTL / Push-Pull
Number of signal channels	6-channel
Initialization time	< 3 ms
Output frequency	≤ 300 kHz
Load current	≤ 30 mA
Power consumption	≤ 0.5 W (without load)

ELECTRONICS

Connection type	Cable, 8-wire, universal, 1.5 m
Supply voltage	7 ... 30 V

[1] The short-circuit rating is only given if Us and GND are connected correctly.

Reference signal, number	1
Reference signal, position	90°, electric, logically gated with A and B
Reverse polarity protection	✓
Short-circuit protection of the outputs	✓ [1]

[1] The short-circuit rating is only given if Us and GND are connected correctly.

MECHANICS

Mechanical design	Solid shaft, face mount flange
Shaft diameter	6 mm With flat
Shaft length	12 mm
Weight	+ 150 g (with connecting cable)
Shaft material	Stainless steel
Flange material	Aluminum
Housing material	Aluminum
Material, cable	PVC
Start up torque	+ 0.5 Ncm (+20 °C)
Operating torque	0.4 Ncm (+20 °C)
Permissible shaft loading	40 N (radial) [1] 20 N (axial)
Operating speed	6,000 min^{-1} [2]
Maximum operating speed	≤ 8,000 min^{-1} [3]
Moment of inertia of the rotor	0.6 gcm^2
Bearing lifetime	2 x 10^9 revolutions
Angular acceleration	≤ 500,000 rad/s^2

[1] Higher values are possible using limited bearing life.

[2] Allow for self-heating of 3.3 K per 1,000 rpm when designing the operating temperature range.

[3] No permanent operation. Decreasing signal quality.

AMBIENT DATA

EMC	According to EN 61000-6-2 and EN 61000-6-3 (class A)
Enclosure rating	IP65
Permissible relative humidity	90 % (Condensation not permitted)
Operating temperature range	–20 °C ... +85 °C, –35 °C ... +95 °C on request
Storage temperature range	–40 °C ... +100 °C, without package
Resistance to shocks	100 g, 6 ms (EN 60068-2-27)
Resistance to vibration	20 g, 10 Hz ... 2,000 Hz (EN 60068-2-6)

CERTIFICATES

EU declaration of conformity	✓
UK declaration of conformity	✓
ACMA declaration of conformity	✓
China RoHS	✓
cRUus certificate	✓
Information according to Art. 3 of Data Act (Regulation EU 2023/2854)	✓

DIMENSIONAL DRAWING SOLID SHAFT, FACE MOUNT FLANGE, SHAFT 6 MM X 12 MM, TYPE 0 FLANGE DESIGN HOLE PATTERN

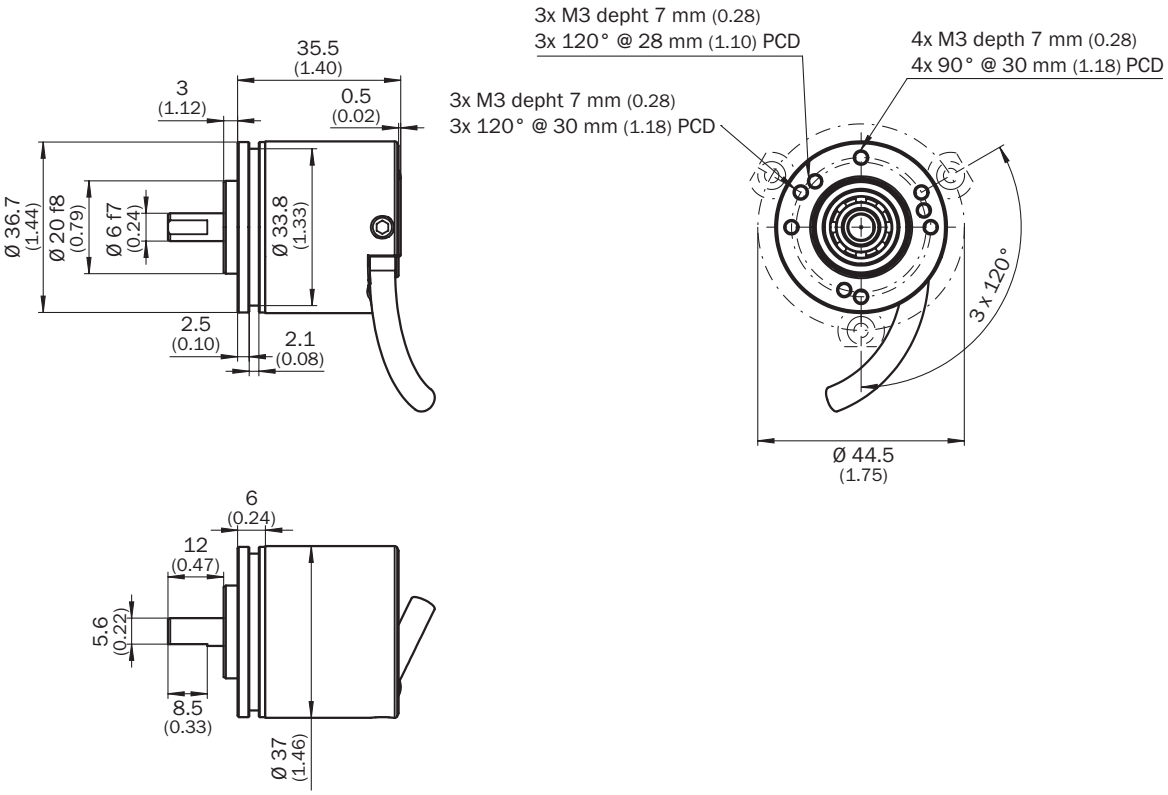

Dimensions in mm (inch)

ANSCHLUSSBELEGUNG

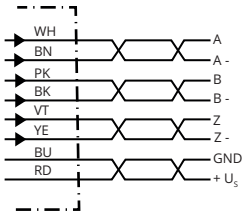

Wire colors (cable connection)	Male connector M12, 8-pin	Male connector M23, 12-pin	TTL/HTL 6-channel signal	Explanation
Brown	1	6	A-	Signal wire
White	2	5	A	Signal wire
Black	3	1	B-	Signal wire
Pink	4	8	B	Signal wire
Yellow	5	4	Z-	Signal wire
Purple	6	3	Z	Signal wire
Blue	7	10	GND	Ground connection
Red	8	12	+U_s	Supply voltage
-	-	9	Not assigned	Not assigned
-	-	2	Not assigned	Not assigned
-	-	11	Not assigned	Not assigned
-	-	7	Not assigned	Not assigned

DIAGRAMS SIGNAL OUTPUTS FOR ELECTRICAL INTERFACES TTL AND HTL

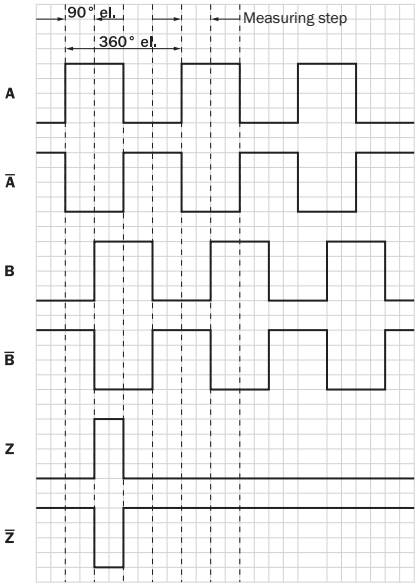

Cw with view on the encoder shaft in direction "A", compare dimensional drawing.
① Interfaces G, P, R only for channels A, B, Z.

Supply voltage	Output
4.5 V...5.5 V	TTL/RS422
7 V...30 V	TTL/RS422
7 V...30 V	HTL/Push Pull
7 V...27 V	HTL/push pull, 3 channel
4.5 V...5.5 V	Open Collector NPN, 3 channel
7 V...30 V	Open Collector NPN, 3 channel

Further information as well as suitable accessories, example applications and downloads such as CAD dimensional models, operating instructions and software can be found at www.sick.com/1060545

SICK AG
WALDKIRCH
GERMANY
SICK.COM

SICK AT A GLANCE

SICK is a leading global technology company for intelligent sensors and integrated solutions in industrial automation. Our technologies set benchmarks, making your industrial processes more efficient, safer and more sustainable – both in logistics and manufacturing operations.

SICK combines sensor intelligence with industry expertise and certified consulting services. We provide the ideal foundation for scalable as well as tailor-made automation solutions and create added value along the entire value chain. Our close partnerships with our customers are more than just a promise: Together, we optimize productivity, improve quality, protect health and safety, and help build a sustainable future. All with empathy and trust.

Since 1946, we have been developing innovative technologies with passion and a pioneering spirit. With a global network in around 40 countries, SICK has a global presence and is always close by. The company's headquarters are located in Waldkirch near Freiburg, Germany. Our customers benefit from our understanding of both local and global requirements, which enables us to deliver tailor-made solutions

SICK

Sensor Intelligence