SICK.COM



DATA SHEET

# C4P-SA06031A00

deTec
Safety light curtains

SICK Sensor Intelligence



Illustration may differ

# SAFETY LIGHT CURTAINS

# C4P-SA06031A00

## ORDERING INFORMATION

| Type | part no. |
|---|---|
| C4P-SA06031A00 | 1220125 |

Further device versions and accessories at www.sick.com/deTec

## DETAILED TECHNICAL DATA

### FEATURES

| | |
|---|---|
| Product version | deTec4 |
| Application | Normal industrial environment |
| System part | Sender |
| Resolution | 30 mm |
| Scanning range | 30 m |
| Protective field height | 600 mm |
| No blind zones | Yes |
| Synchronization | Optical synchronization |
| Integrated laser alignment aid | ✓ |
| Items supplied | Sender |

### SAFETY-RELATED PARAMETERS

| | |
|---|---|
| Type | Type 4 (IEC 61496-1) |
| Safety integrity level | SIL 3 (IEC 61508) |
| Category | Category 4 (ISO 13849-1) |
| Performance level | PL e (ISO 13849-1) |
| $PFH_D$ (mean probability of a dangerous failure per hour) | |
| Single device | $15.3 \times 10^{-9}$ |
| Cascade with one guest | $30.5 \times 10^{-9}$ |
| Cascade with two guest devices | $45.6 \times 10^{-9}$ |
| $T_M$ (mission time) | 20 years (ISO 13849-1) |
| Safe state in the event of a fault | At least one OSSD is in the OFF state. |

## FUNCTIONS

| | |
|---|---|
| Note | The product can be used with different function packages.<br>The function packages are determined by the equipment used. |
| Function package SP1 | Protective operation<br>Automatic calibration of the protective field width<br>Beam coding<br>Restart interlock<br>External device monitoring (EDM)<br>Cascading<br>Equipment: Sender and receiver with SP1 system plug |
| Function package SP2 | Function package SP1 included<br>Smart presence detection<br>Reduced resolution (Basic)<br>Dynamic protective field width during operation<br>Muting (2-signal muting)<br>Partial muting<br>Smart Box Detection<br>Equipment: Sender with SP1 system plug and receiver with SP2 system plug |
| Function package DMM4 | Function package SP2 included (except Smart Box Detection)<br>Smart restart interlock<br>Transmitting power adjustment<br>Muting (4-signal muting)<br>Fixed blanking<br>Operating modes<br>Configurable multiple sampling<br>Inputs for safety sensors (SDI)<br>Equipment: Sender and receiver with SP1 system plug and DMM4 extension module |
| Function package DCM4 | Function package SP2 included<br>Smart restart interlock<br>Reduced resolution (Advanced)<br>Transmitting power adjustment<br>Fixed blanking<br>Teach-in for fixed blanking<br>Floating blanking<br>Operating modes<br>Configurable multiple sampling<br>Object pattern recognition<br>Equipment: Sender and receiver with SP1 system plug and DCM4 extension module |

## INTERFACES

| | |
|---|---|
| System connection | Depending on system plug (M12 male connector, 5-pin or 8-pin) |
| Extension connection | Depending on system plug (without extension connection or with M12 female connector, 5-pin) |
| Configuration method | DIP switch on system plug |
| Display elements | LEDs |

## ELECTRONICS

| | |
|---|---|
| Protection class | III (IEC 61140) |
| Supply voltage $V_s$ | 24 V DC (19.2 V ... 28.8 V) |
| Ripple | ≤ 10 % |
| Power consumption typical | 1.4 W (DC) |

## MECHANICS

| | |
|---|---|
| Dimensions | See dimensional drawing |
| Housing material | Aluminum extruded profile |

## AMBIENT DATA

| | |
|---|---|
| Enclosure rating | IP65 (IEC 60529)<br>IP67 (IEC 60529) |

| | |
|---|---|
| Ambient operating temperature | –30 °C ... +55 °C |
| Storage temperature | –30 °C ... +70 °C |
| Air humidity | 15 % ... 95 %, Non-condensing |
| Vibration resistance | 5 ... 150 Hz, 3,5 mm / 1 g (EN 60068-2-6) |
| Shock resistance | 15 g / 6 ms (EN 60068-2-27) |
| Class | 3M4 (IEC TR 60721-4-3) |

## OTHER INFORMATION

| | |
|---|---|
| Wave length | 850 nm |
| Type of light | Near-infrared (NIR), invisible |
| Integrated laser alignment aid | ✓ |
| Laser class | 1 |
| Wave length | 650 nm |
| Type of light | Visible red light |

## CERTIFICATES

| | |
|---|---|
| EU declaration of conformity | ✓ |
| UK declaration of conformity | ✓ |
| ACMA declaration of conformity | ✓ |
| Moroccan declaration of conformity | ✓ |
| China RoHS | ✓ |
| UK-Type-Examination approval | ✓ |
| S Mark certificate | ✓ |
| ULus approval | ✓ |
| cUL approval | ✓ |
| Taiwan OSHA certificate | ✓ |
| Japan Press Safety certificate | ✓ |
| EC-Type-Examination approval | ✓ |
| China GB/T certificate | ✓ |
| Information according to Art. 3 of Data Act (Regulation EU 2023/2854) | ✓ |

**DIMENSIONAL DRAWING**

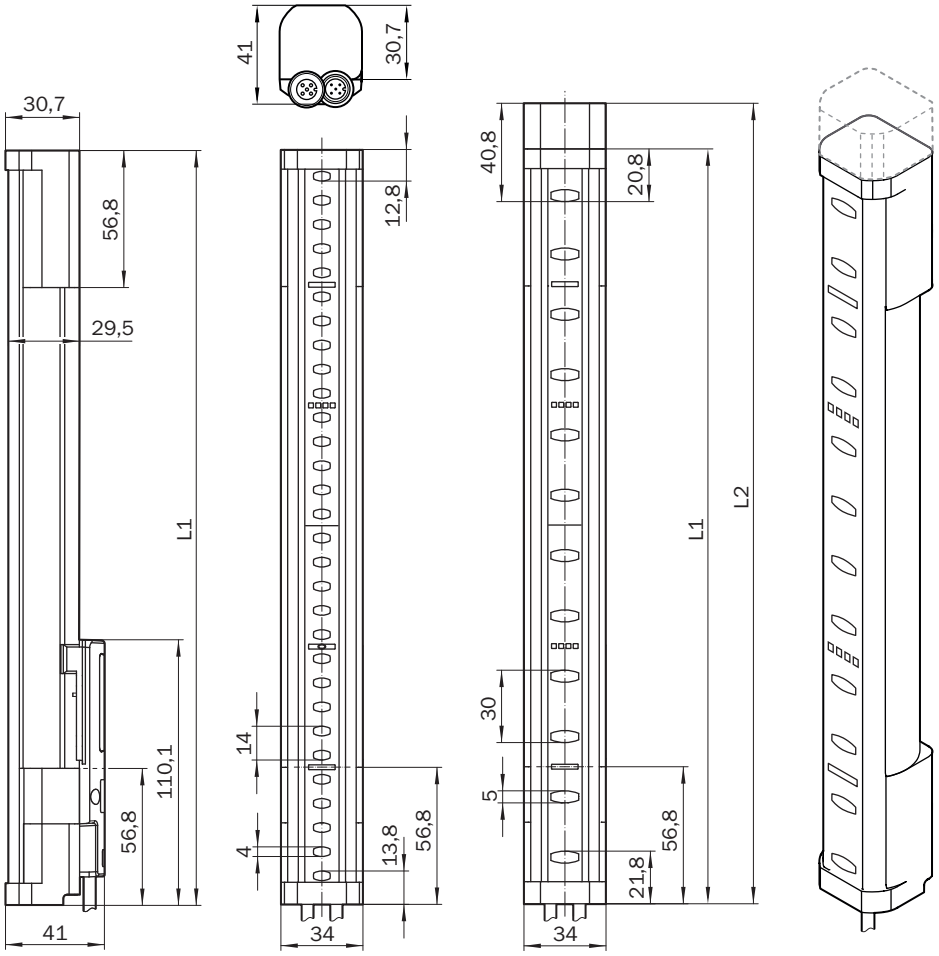


Dimensions in mm (inch)

| Protective field height | L1 | L2 |
|---|---|---|
| 300 (11.81) | 313 (12.32) | 332 (13.07) |
| 450 (17.72) | 463 (18.23) | 482 (18.98) |
| 600 (23.62) | 613 (24.13) | 632 (24.88) |
| 750 (29.53) | 763 (30.04) | 782 (30.79) |
| 900 (35.43) | 913 (35.94) | 932 (36.69) |
| 1,050 (41.34) | 1,063 (41.85) | 1,082 (42.6) |
| 1,200 (47.24) | 1,213 (47.75) | 1,232 (48.5) |
| 1,350 (53.15) | 1,362 (53.62) | 1,381 (54.37) |
| 1,500 (59.06) | 1,512 (59.53) | 1,531 (60.28) |
| 1,650 (64.96) | 1,662 (65.43) | 1,681 (66.18) |
| 1,800 (70.87) | 1,812 (71.34) | 1,831 (72.09) |
| 1,950 (76.77) | 1,962 (77.24) | 1,981 (77.99) |
| 2,100 (82.68) | 2,112 (83.15) | 2,131 (83.9) |

**CONNECTION DIAGRAM DETEC4 / DETEM4 ON DMM4, MUTING, RESET, OVERRIDE, SDI**

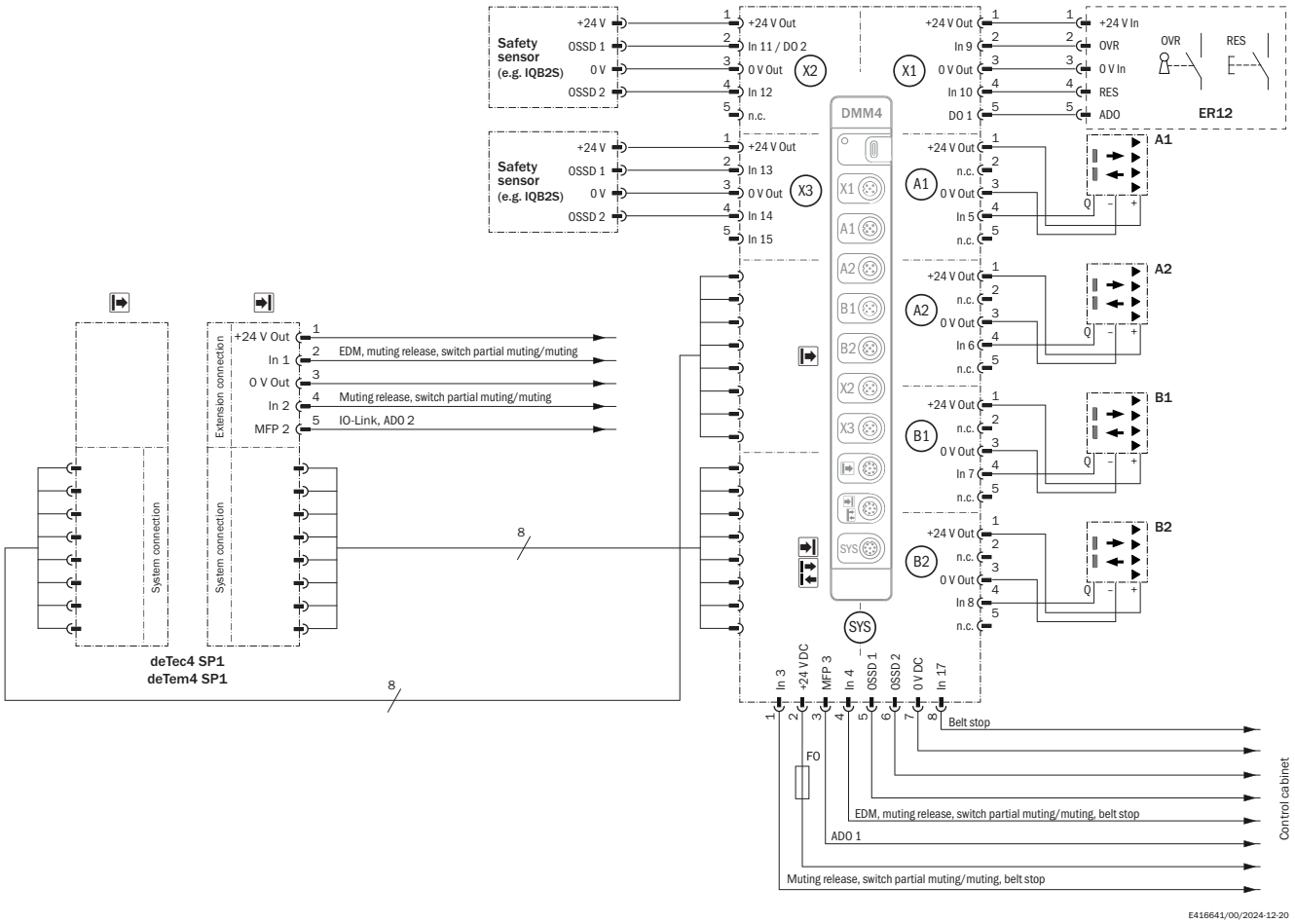


The requirements in the operating instructions of the devices used must be adhered to.

## CONNECTION DIAGRAM DETEC4 / DETEM4 ON DMM4, MUTING, RESET, OVERRIDE, OPERATING MODE SELECTION

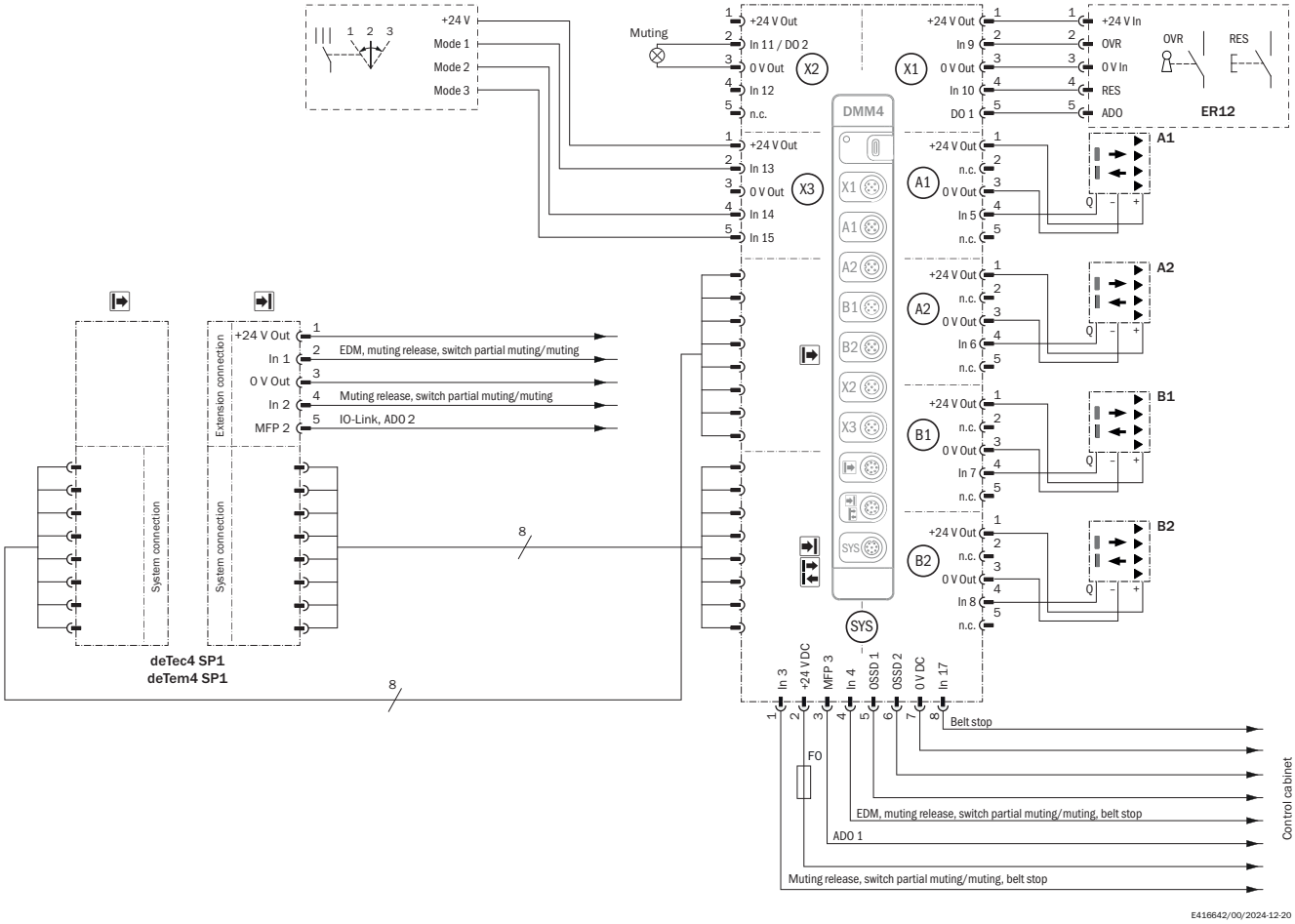


The requirements in the operating instructions of the devices used must be adhered to.

Further information as well as suitable accessories, example applications and downloads such as CAD dimensional models, operating instructions and software can be found at www.sick.com/1220125

SICK AG
WALDKIRCH
GERMANY
SICK.COM

# SICK AT A GLANCE

SICK is a leading global technology company for intelligent sensors and integrated solutions in industrial automation. Our technologies set benchmarks, making your industrial processes more efficient, safer and more sustainable – both in logistics and manufacturing operations.

SICK combines sensor intelligence with industry expertise and certified consulting services. We provide the ideal foundation for scalable as well as tailor-made automation solutions and create added value along the entire value chain. Our close partnerships with our customers are more than just a promise: Together, we optimize productivity, improve quality, protect health and safety, and help build a sustainable future. All with empathy and trust.

Since 1946, we have been developing innovative technologies with passion and a pioneering spirit. With a global network in around 40 countries, SICK has a global presence and is always close by. The company's headquarters are located in Waldkirch near Freiburg, Germany. Our customers benefit from our understanding of both local and global requirements, which enables us to deliver tailor-made solutions

SICK

Sensor Intelligence