SICK.COM

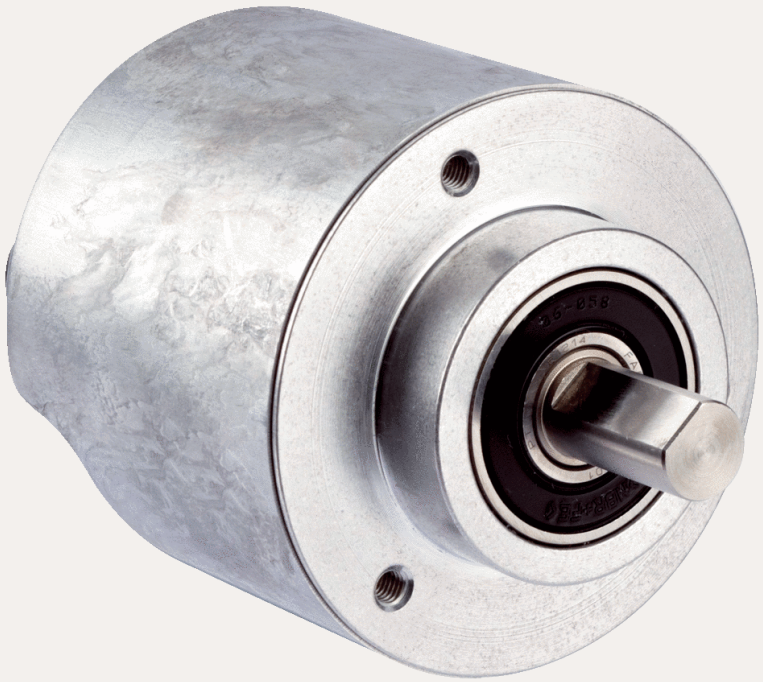

DATA SHEET

AFM60A-S4IB018x12

AFS/AFM60 Ethernet
Absolute encoders

SICK Sensor Intelligence



Illustration may differ

ABSOLUTE ENCODERS

AFM60A-S4IB018x12

ORDERING INFORMATION

Type	part no.
AFM60A-S4IB018x12	1055334

Further device versions and accessories at www.sick.com/AFS_AFM60_Ethernet

DETAILED TECHNICAL DATA

SAFETY-RELATED PARAMETERS

$MTTF_D$ (mean time to dangerous failure)	80 years (EN ISO 13849-1) [1]

[1] This product is a standard product and does not constitute a safety component as defined in the Machinery Directive. Calculation based on nominal load of components, average ambient temperature 40°C, frequency of use 8760 h/a. All electronic failures are considered hazardous. For more information, see document no. 8015532.

PERFORMANCE

Number of steps per revolution (max. resolution)	262,144 (18 bit)
Number of revolutions	4,096 (12 bit)
Max. resolution (number of steps per revolution x number of revolutions)	18 bit x 12 bit (262,144 x 4,096)
Error limits G	0.03° [1]
Repeatability standard deviation σ_r	0.002° [2]

[1] In accordance with DIN ISO 1319-1, position of the upper and lower error limit depends on the installation situation, specified value refers to a symmetrical position, i.e. deviation in upper and lower direction is the same.

[2] In accordance with DIN ISO 55350-13; 68.3% of the measured values are inside the specified area.

INTERFACES

Communication interface	EtherNet/IP™
Encoder profile	V4.1 class3
Data transmission rate (baud rate)	10 Mbit/s, 100 Mbit/s
Transmission medium	CAT-5e cable
Initialization time	Approx. 10 s
RPI (requested packet interval)	5 ms ... 750 ms
Parameterising data	Number of steps per revolution Number of revolutions PRESET Counting direction Sampling rate for speed calculation

	Unit for output of speed, acceleration and temperature value Output of scalable limit values such as: position ranges, speed, acceleration, start-up of the CW/CCW directions of rotation, change of direction of rotation, operating hours and hours of shaft movement (motion) Round axis functionality Heartbeat
Available diagnostics data	Minimum and maximum temperature Maximumspeed Power-on counter Operatinghours counter power-on/motion Counter of direction changes/number of movements cw/number of movements ccw Number of changes of direction Minimum andmaximum operating voltage Signal monitoring for singleturn and multiturn
DLR (Device Level Ring)	✓

ELECTRONICS

Connection type	Male connector, 1x, M12, 4-pin, axial [1] Female connector, 2x, M12, 4-pin, axial [2]
Supply voltage	10 ... 30 V
Power consumption	≤ 3 W (without load)
Reverse polarity protection	✓

[1] A-coded.

[2] D-coded.

MECHANICS

Mechanical design	Solid shaft, face mount flange
Shaft diameter	10 mm
Shaft length	19 mm
Characteristics of the shaft	With flat
Weight	0.2 kg
Shaft material	Stainless steel
Flange material	Aluminum
Housing material	Aluminum
Start up torque	0.5 Ncm (+20 °C)
Operating torque	0.3 Ncm (+20 °C)
Permissible shaft loading	80 N (radial) 40 N (axial)
Operating speed	≤ 9,000 min^{-1} [1]
Moment of inertia of the rotor	6.2 gcm^2
Bearing lifetime	3 x 10^9 revolutions
Angular acceleration	≤ 500,000 rad/s^2

[1] Allow for self-heating of 3.3 K per 1,000 rpm when designing the operating temperature range.

AMBIENT DATA

EMC	According to EN 61000-6-2 and EN 61000-6-3
Enclosure rating	IP65, shaft side (IEC 60529) IP67, housing side (IEC 60529) [1]
Permissible relative humidity	90 % (Condensation not permitted)
Operating temperature range	–40 °C ... +85 °C

[1] With mating connector fitted.

Storage temperature range	–40 °C ... +100 °C, without package
Resistance to shocks	100 g, 6 ms (EN 60068-2-27)
Resistance to vibration	30 g, 10 Hz ... 2,000 Hz (EN 60068-2-6)

[1] With mating connector fitted.

CERTIFICATES

EU declaration of conformity	✓
UK declaration of conformity	✓
ACMA declaration of conformity	✓
Moroccan declaration of conformity	✓
China RoHS	✓
cTUVus certificate	✓
Ethernet/IP certificate	✓
Information according to Art. 3 of Data Act (Regulation EU 2023/2854)	✓

DIMENSIONAL DRAWING SOLID SHAFT, FACE MOUNT FLANGE

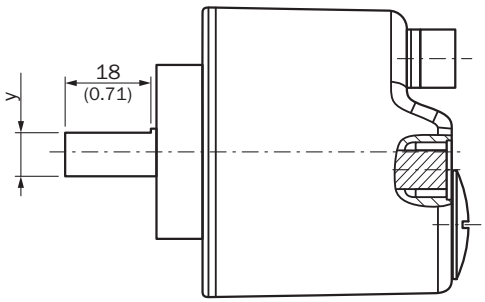

Dimensions in mm (inch)
diameter x f7 corresponds to the shaft diameter

DIMENSIONAL DRAWING SOLID SHAFT, FACE MOUNT FLANGE, ROUND

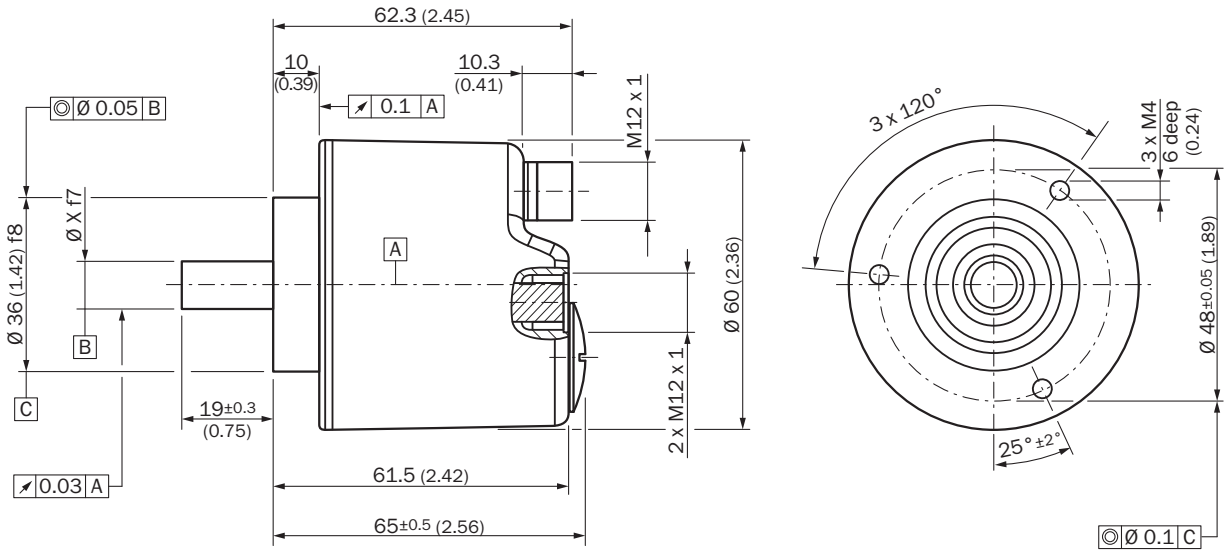

All dimensions in mm (inch)

Dimensions in mm (inch)
diameter x f7 corresponds to the shaft diameter

ANSCHLUSSBELEGUNG FEMALE CONNECTOR

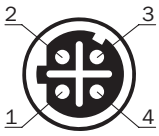

Port 1, Port 2

PIN	Signal
1	T x D+
2	R x D+
3	T x D-
4	R x D-

ANSCHLUSSBELEGUNG MALE CONNECTOR

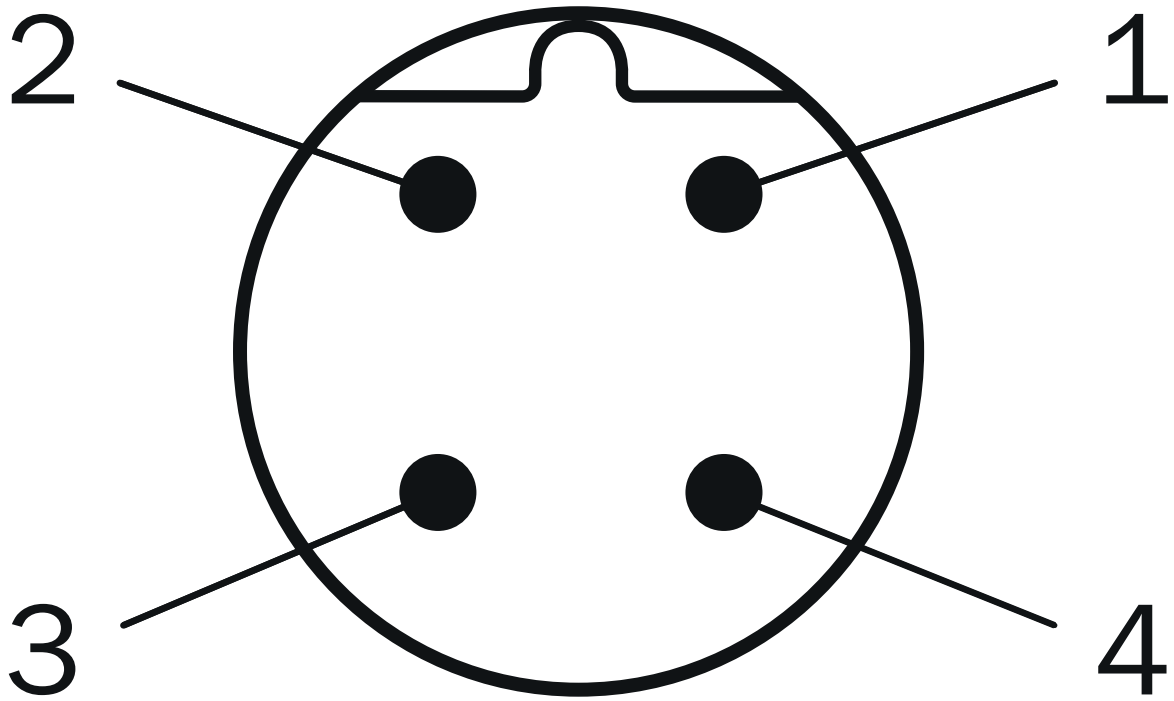

Supply voltage

PIN	Signal
1	10 V ... 30 V
2	Not assigned
3	GND
4	Not assigned

CONNECTION DIAGRAM

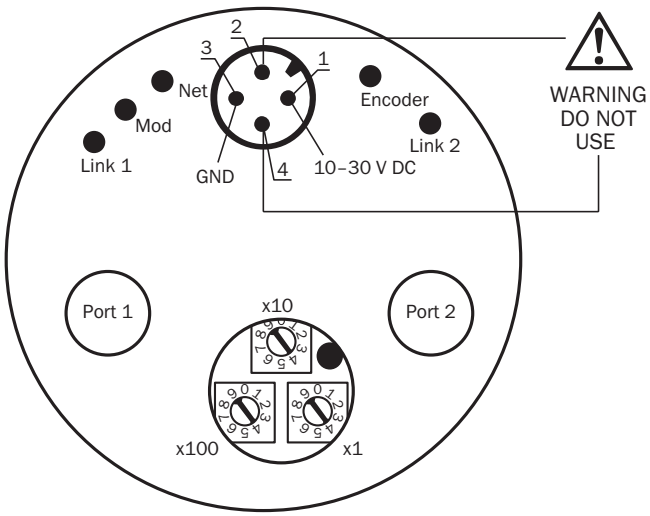

Further information as well as suitable accessories, example applications and downloads such as CAD dimensional models, operating instructions and software can be found at www.sick.com/1055334

SICK AG
WALDKIRCH
GERMANY
SICK.COM

SICK AT A GLANCE

SICK is a leading global technology company for intelligent sensors and integrated solutions in industrial automation. Our technologies set benchmarks, making your industrial processes more efficient, safer and more sustainable – both in logistics and manufacturing operations.

SICK combines sensor intelligence with industry expertise and certified consulting services. We provide the ideal foundation for scalable as well as tailor-made automation solutions and create added value along the entire value chain. Our close partnerships with our customers are more than just a promise: Together, we optimize productivity, improve quality, protect health and safety, and help build a sustainable future. All with empathy and trust.

Since 1946, we have been developing innovative technologies with passion and a pioneering spirit. With a global network in around 40 countries, SICK has a global presence and is always close by. The company's headquarters are located in Waldkirch near Freiburg, Germany. Our customers benefit from our understanding of both local and global requirements, which enables us to deliver tailor-made solutions

SICK

Sensor Intelligence