PRODUCT OVERVIEW

SERVOPRO AquaXact 1688 Controller

SAFE AREA



GAS	MEASURES	APPLICATION
MOISTURE	DEW POINT	PROCESS CONTROL
	PPMV	

SENSING TECHNOLOGY

ALUMINUM OXIDE

KEY APPLICATIONS

- Glove boxes
- Instrument air units
- Medical gases
- Semiconductors
- Furnace gas/heat treating
- Power generation
- Air dryers
- Pharmaceutical
- Aerospace

NEXT-GENERATION DIGITAL CONTROLLER PLATFORM DESIGNED SPECIFICALLY FOR THE AQUAXACT 1688 MOISTURE TRANSDUCER

UNRIVALLED PERFORMANCE

- Manufactured by Servomex to the same high standards as the company's innovative gas analyzers
- Seamless integration with the AquaXact 1688 moisture sensor for advanced digital control of dew point and ppmV H_2O measurements

FLEXIBLE

- Analog and digital outputs 4-20mA & 01-Vdc, RS232, RS484 (Modbus) and advanced digital communication including Modbus Ethernet TCP/IP and PROFIBUS
- Up to eight alarms and relays
- Ability to digitally reset the range of the AquaXact probe for use as a 4-20mA power loop output device
- Digitally access the AquaXact probe diagnostics in the field

BENCHMARK COMPLIANCE

- Complies with Low Voltage, EMC, CE and CSA applicable directives

EASY TO USE

- Compact footprint for easy integration into your system
- Advanced touchscreen GUI allows intuitive hands-on setup and operation
- Bright color touch screen display
- Battery power option available for easy field tip replacements

LOW COST OF OWNERSHIP

- Utilizes the same common touchscreen GUI as the MonoExacts and MultiExact so minimal training requirements
- Allows in-the-field single point calibration of AquaXact 1688 sensor tip
- Digitally replace AquaXact 1688 sensor tips, eliminating cost and time wasted returning the transducers for recalibration

For more information please contact us

Visit servomex.com/contact

SERVOMEX
a spectris company

PRODUCT OVERVIEW

SERVOPRO AquaXact 1688 Controller

SAFE AREA

Designed to work with AquaXact 1688 moisture sensor

The AquaXact 1688 is a rugged, ultra-thin film Aluminum Oxide moisture transmitter that enables fast, accurate dew point and ppmV H_2O measurements of moisture in a wide range of gas phase process applications. It can connect to the AquaXact 1688 Controller or a compatible Servomex analyzer via a RS485 cable with a maximum length of 150m.



SAMPLE CONDITIONING SYSTEMS

Designed specifically to convey the sample gas to the AquaXact 1688 at the proper flow and pressure for your application. Servomex offers a variety of 5 sample manifolds depending on you specific needs from the most sophisticated seen below to the simplest. All 316L Stainless Steel construction and can include shut-off valves, pressure regulators, pressure gauges, and flowmeters. All of our manifold designs allow for easy mounting of the AquaXact probe and include through holes for mounting just about anywhere.

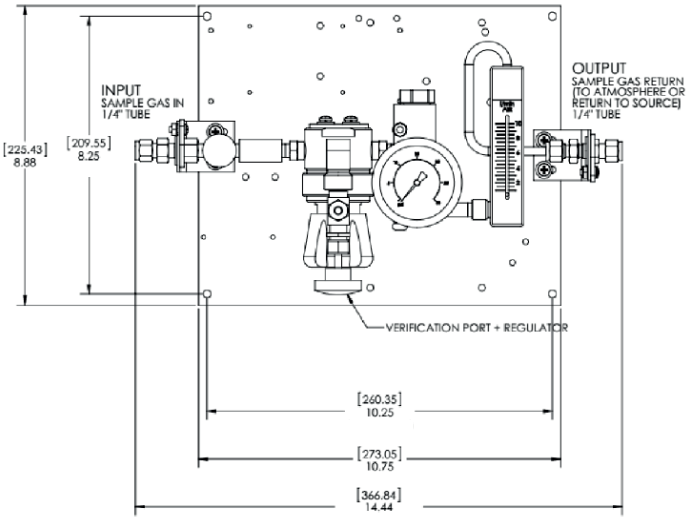

USEFUL LINKS

SERVOMEX SERVICE NETWORK
servomex.com/service

SERVOMEX SYSTEMS INTEGRATED SOLUTIONS
servomex.com/systems

SERVOMEX EXPERT UNRIVALLED KNOWLEDGE AND VISION
servomex.com/expert-guidance



PBTDS 1688C Rev. 0 Date: 11/20

These analyzers are not intended for any form of use on humans and are not medical devices as described in the Medical Devices Directive 93/42EEC.

Please note: *Whilst every effort has been made to ensure accuracy, no responsibility can be accepted for errors and omissions. Data may change, as well as legislation, and you are strongly advised to obtain copies of the most recently issued regulations, standards and guidelines. This document is not intended to form the basis of a contract.*

Servomex has a policy of constant product improvement and reserves the right to change specifications without notice. © Servomex Group Limited. 2020. A Spectris company. All rights reserved.

SERVOMEX
a spectris company

SERVOMEX.COM

TECHNICAL DATA SHEET



SERVOPRO AquaXact 1688 Controller

SPECIFICATIONS

GAS MEASURED	H_2O
TECHNOLOGY	Ultra-thin film aluminum oxide moisture sensor
DEVICE	
Storage temperature	0°C to +50°C (-32°F to +122°F)
Operating temperature	0°C to +45°C (+32°F to +113°F)
Analog output	4-20mA and 0-10Vdc outputs
Alarms	Up to 8 sensor specific alarms
Mounting	Bench top, panel mount, 19" rack mount
Relay outputs	Up to 8 relays, rated at 1.0A at 30Vac or dc
Communications	RS232, RS485, Modbus RDU, Modus TCP/IP and PROFIBUS
PHYSICAL	
Size	205mm (8”) wide x 140mm (5.5”) high x 230mm (9.1”) deep
Weight	3.2kg (7lbs)

COMPLIANCE

EC DIRECTIVES	This product complies with the EMC Directive, the Low Voltage Directive, and all other applicable directives.
ELECTRICAL SAFETY	Electrical safety to IEC 61010-1 and CSA Certified; EU EMC and Low Voltage Directive Rated for “Overvoltage Category II” and “Pollution Degree 2”

DIMENSIONAL DRAWINGS

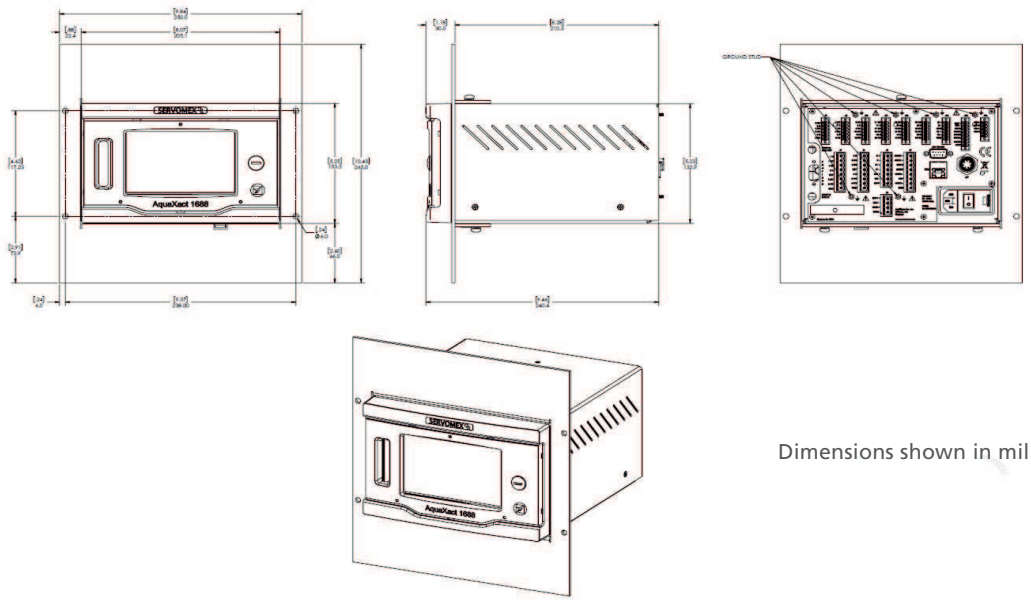

Dimensions shown in millimetres [inches]

The performance specification has been written and verified in accordance with the international standard IEC 61207-1:1994 “Expression of performance of gas analyzers”

WE'RE READY TO HELP

WHATEVER YOUR GAS ANALYSIS REQUIREMENTS, WHEREVER YOU ARE

PBTDS 1688C Rev. 0 Date: 11/20

These analyzers are not intended for any form of use on humans and are not medical devices as described in the Medical Devices Directive 93/42EEC.

Please note: *Whilst every effort has been made to ensure accuracy, no responsibility can be accepted for errors and omissions.*
Data may change, as well as legislation, and you are strongly advised to obtain copies of the most recently issued regulations, standards and guidelines.
This document is not intended to form the basis of a contract.

Servomex has a policy of constant product improvement and reserves the right to change specifications without notice. © Servomex Group Limited. 2020.
A Spectris company. All rights reserved.

SERVOMEX
a spectris company

SERVOMEX.COM