rotork®

Keeping the World Flowing
for Future Generations



YT-3100

Smart Positioner

Product manual

Contents

1 Introduction 5
1.1 General Information for the users 5
1.2 Manufacturer Warranty 5
1.3 Explosion Proof Warning (Only for Intrinsic safety type positioners) 6
2 Product Description 7
2.1 General 7
2.2 Main Features and Functions 7
2.3 Label Description 8
2.4 Product Code 10
2.5 Product Specification 11
2.6 Certifications 12
2.7 Parts and Assembly 13
2.8 Product Dimension 14
3 Installation 15
3.1 Safety 15
3.2 Tools for installation 15
3.3 Linear positioner Installation 16
3.3.1 Safety 16
3.3.2 Standard lever type positioner Installation Steps 17
3.4 Rotary positioner Installation 21
3.4.1 Components 21
3.4.2 Rotary Bracket Information 22
3.4.3 Rotary positioner Installation Steps 23
4 Connection - Air 25
4.1 Safety 25
4.2 Supply Pressure Condition 25
4.3 Piping Condition 25
4.4 Connection – Piping with actuator 25
4.4.1 Single acting actuator 25
4.4.2 Double acting actuator 26
5 Connection – Power 27
5.1 Safety 27
5.2 Connection 28
5.3 Ground 28
6 Adjustments 29
6.1 Orifice Installment 29
6.1.1 Plate type Orifice Installment 29
7 Optional Sub-PCB Installment 30

7.1 Installation steps 30
8 Maintenance 31
8.1 Supply air 31
8.2 Seals 31
9 Auto Calibration and Operation 32
9.1 Warning 32
9.2 LCD display and buttons 32
9.2.1 LCD display and symbols 32
9.2.2 Button and function 33
9.3 Menu levels 34
9.4 RUN Mode Monitor 35
9.5 Configuration and Operation 36
9.6 Calibration (CALIb) 38
9.6.1 Acting Type (SINGLE / dOUBLE) 39
9.6.2 Auto Calibration 1 (AUTO 1) 39
9.6.3 Auto Calibration 2 (AUTO 2) 40
9.6.4 Auto Calibration 3 (AUTO 3) 41
9.6.5 Travel Zero (TVL ZERO) and Travel end (TVL ENd) 42
9.7 Manual Operation (MAN OPER) 43
9.7.1 Manual Operation by Set position (MAN SP) 43
9.7.2 Manual Operation by Manipulator Value (MAN MV) 44
9.8 Control Parameters (CTL PARM) 45
9.8.1 Dead Band (dEAdbANd) 45
9.8.2 Forward P parameter (KP UP) and reverse P parameter (KP dN) 46
9.8.3 Forward Integral time parameter (TI UP) and reverse Integral time parameter (TI dN) 46
9.8.4 Forward D parameter (Kd UP) and reverse D parameter (Kd dN) 47
9.8.5 Auto Dead band Mode (AUTO db) 47
9.8.6 Performance Mode (PER) 48
9.9 Input Configuration (IN CFG) 49
9.9.1 Signal Direction (SIG NORM / REVS) 49
9.9.2 Split Range Mode (SPLIT) 50
9.9.3 Custom Split Range Zero (CST ZERO) 50
9.9.4 Custom Split Range End (CST ENd) 51
9.9.5 Valve Flow Characterization Curves (CHAR) 51
9.9.6 User Set Characterization 5 Points (U5) 52
9.9.7 User Set Characterization 21 Points (U21) 53
9.9.8 Tight Shut Open (TSHUT OP) 54
9.9.9 Tight Shut Close (TSHUT CL) 55
9.10 Output Configuration (OUT CFG) 56
9.10.1 4-20 mA Analog Output Direction (PTM NORM / REVS) 56

9.10.2 4-20 mA Analog Output Zero / End (PTM ZERO / ENd) 57
9.10.3 Back Calculation (bACKCAL oFF / on) 58
9.11 Device Configuration (dEV CFG) 59
9.11.1 Action Setting (ACT REVS / dIR) 59
9.11.2 Linear Interpolation (ITP oFF / on) 60
9.11.3 Lock of Parameters (Write Protect, W UNLOCK / LOCK) 60
9.11.4 Actual Position View Mode (View Mode, VI NORM / REVS) 61
9.11.5 Factory Reset (dEFAULT oFF / on) 61
9.11.6 Positioner Self-Test (SELFTEST) 62
9.12 Diagnosis Mode (dIAGNd) 63
9.12.1 Default Alarm Settings 63
9.12.2 Device Status (dS) 64
9.12.3 Reset Alarm Status (RST ALRM oFF / on) 65
9.12.4 View Event Log (EVT LOG) 66
9.13 Position information (INFO) 67
9.14 Error codes during automatic calibration 69
9.15 Status and Alarm Code 70
10 Main Software Map 72

1 Introduction

1.1 General Information for the users

Thank you for purchasing Rotork YTC Limited products. Each product has been fully inspected after its production to offer you the highest quality and reliable performance. Please read the product manual carefully prior to installing and commission the product.

- Installation, commissioning, and maintenance of the product may only be performed by trained specialist personnel who have been authorized by the plant operator accordingly.
- The manual should be provided to the end-user.
- The manual can be altered or revised without any prior notice. Any changes in product's specification, design, and/or any components may not be printed immediately but until the following revision of the manual.
- When the manual refers to **"Valve Zero / Zero"** means the final valve position upon pneumatic pressure has been fully exhausted from positioner's OUT1 port. For example, the valve zero position may differ between linear direct and reverse actions. (DA/RA)
- The manual should not be duplicated or reproduced for any purpose without prior approval from Rotork YTC Limited, Gimpo-si, South Korea.
- In case of any other problems that are not stated in this manual, please make immediate contact to Rotork YTC Limited.
- Positioner is an accessory of the control valve, so please make sure to read the applicable instruction manual of the control valve prior to installation and operation.

1.2 Manufacturer Warranty

- For the safety, it is important to follow the instructions in the manual. Manufacturer will not be responsible for any damages caused by user's negligence.
- Any modifications or repairs to the product may only be performed if expressed in this manual. Injuries and physical damages caused by customer's modifying or repairing the product without a prior consultation with Rotork YTC Limited will not be compensated. If any alterations or modifications are necessary, please contact Rotork YTC Limited directly.
- The warranty period for the product is (12) months from the date of shipment unless otherwise stated. Customers can extend the warranty period by an additional (12) months by registering the product's serial number or lot number, customer information, and installation address on the warranty extension application site Product Registration (https://www.rotork.com/en/service/product-registration).
- Manufacturer warranty will not cover products that have been subjected to abuse, accidents, alterations, modifications, tampering, negligence, misuse, faulty installation, lack of reasonable care, repair or service in any way that is not contemplated in the documentation for the product, or if the model or serial number has been altered, tampered with, defaced or removed; damages that occurs in shipment, due to act of God, failure due to power surge, or cosmetic damage. Improper or incorrectly performed maintenance will void this limited warranty.

- For detailed warranty information, please contact the corresponding local Rotork YTC Limited office or main office in South Korea.

1.3 Explosion Proof Warning (Only for Intrinsic safety type positioners)

Please ensure the unit is being used and installed in conformity with local, regional, and national explosion proof within the proper safety barrier environment.

- Refer to “2.6 Certifications”
- Explosion proof type of cables and gaskets should be used, when explosion gases are present at the installation site.
- Positioner has 1 port for power connection. Explosion proof type wires and packing should be used.



- Ring terminal with surface area of more than 1.25 mm^2 with M4 spring washer should be used to connect the power.
- For external ground terminal, ring terminal with surface area of more than 5.5 mm^2 should be used.
- The enclosure of the product contains aluminum, which is considered to constitute a potential risk of ignition when subjected to impact or friction. Care must be used during installation in locating this equipment to prevent impact or friction
- Some of the enclosure parts are made of non-metallic materials. To prevent the risk of
- Electrostatic sparking, clean the enclosure only with a damp cloth.
- The product must be installed in such a manner as to minimize the risk of impact or friction with other metal surfaces.
- For Intrinsically Safe installations, the product must be connected to suitably rated intrinsically safe equipment, and must be installed in accordance with applicable intrinsically safe installation standards.
- Special conditions for safe use of sign “X” of ATEX / IECEx :
  The ambient temperature range deviates from the standard temperature range and amounts to:
  Temperature class T5: -30 °C to +60 °C
  Temperature class T6: -30 °C to +40 °C.
  Equipment must be protected from high electrostatic charge hazards and placed with a warning marking to be cleaned only with damp cloth.

2 Product Description

2.1 General

YT-3100 Smart Valve Positioner accurately controls valve stroke in response to an input signal of 4-20 mA from the controller. Built-in micro-processor optimizes the positioner's performance and provides unique functions such as **Auto-Calibration, PID Control.**

2.2 Main Features and Functions

- LCD display enables users to monitor the positioner status.
- User will easily understand the method of using 4 buttons because it work same in all versions of firmware interfaces.
- When unexpected situation like momentary blackout happens, our positioner boot-time only take 0.5 second and this can minimize the travel of valve which consequentially increase the safety of system.
- Positioner operates normally even there are sudden changes in supply pressure and / or high vibration environment.
- The method of Auto Calibration is very simple.
- As an advantage of having very low air consumption, It could greatly reduce operating costs in large-scale plants.
- It is compatible with most of controllers.
- Orifices can be installed even in the field to minimize the hunting occurrence and optimize operating conditions.
- Valve system becomes more stable by using 4-20 mA analog output function (option).
- Different valve characteristics can be adjusted – Linear, Quick Open, Equal Percentage, and User Set which user can make 5 or 21 points characterizations.
- Tight Shut – Close and Shut - Open can be set.
- PID parameters can be adjusted in the field without any additional communicator.
- Split range 4 to 12 mA or 12 to 20 mA can be set.
- Operating temperature for positioners is -30 to 85 °C (Please check certified explosion proof temperature in case of Ambient temperature)
- Hand calibration function can set Zero point or End point manually.
- It has IP66 protection grade. (excluding the pressure gauges)
- Polyester powder coating resists the corrosion process.
- Maintenance of the positioner is easy because of modularized inner structure.

2.3 Label Description

- MODEL : Indicates the model number and any options of the positioner.
- EXPLOSION PROOF : Indicates certified explosion proof grade.
- INGRESS PROTECTION : Indicates enclosure protection grade.
- INPUT SIGNAL : Indicates input signal range.
- OPERATING TEMP. : Indicates the allowable operating temperature.
- SUPPLY PRESSURE : Indicates the supply pressure range.
- SERIAL NUMBER : Indicates unique serial number.
- MONTH.YEAR : Indicates manufactured month and year.
-
- INTRINSIC SAFETY / NONINCENDIVE : Indicates intrinsic safety explosion proof grade.
- AMBIENT TEMP. : Indicates the allowable ambient temperature for explosion proof.
- Ui, Ii, Pi, Ci, Li : Indicates the allowable electrical data in the certificate. You can also see the details in the certificate.

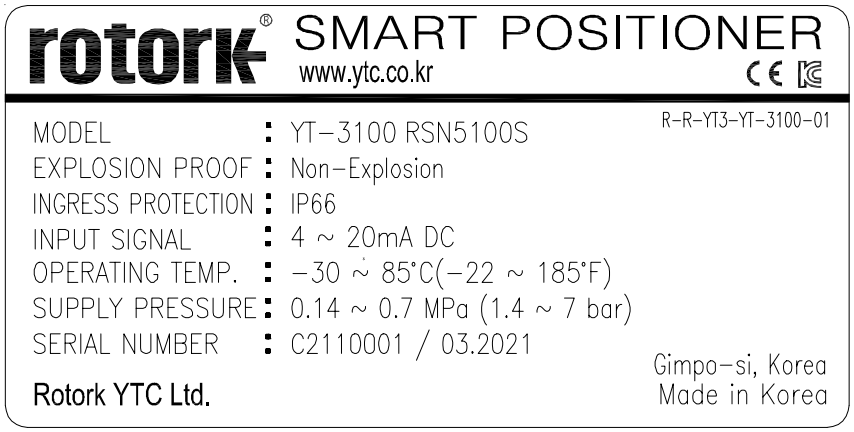

Fig. L-1: Non-explosion proof



Fig. L-2: Intrinsic safety type (ATEX, IECEx, KCs, NEPSI)



Fig. L-3: Intrinsic safety type (CCC, NEPSI)

2.4 Product Code

YT-3100 follows suffix symbols as follows.

YT-3100 [1] [2] [3] [4] [5] [6] [7] [8]

[1] Motion Type		L :	Linear (Positioner is attached the right yoke of actuator.)
		R :	Rotary
[2] Acting type		S :	Single
		D :	Double
[3] Explosion Protection		N :	Non-Explosion proof
		i :	Ex ia IIC T5/T6 Gb : ATEX, IECEx, KCs, NEPSI
		Z :	Ex ia IIC T5/T6 Gb : CCC, NEPSI
[4] Lever Type	Linear	0 :	10 to 40 mm (Standard type)
		1 :	20 to 100 mm (Standard type)
		2 :	90 to 150 mm (Standard type)
	Rotary	5 :	Namur
[5] Conduit - Air Connection Type		1 :	G 1/2 – Rc 1/4
		2 :	G 1/2 – 1/4 NPT
[6] Gauge block		0 :	None
		1 :	Gauge block
[7] Option		0 :	None
		1 :	4-20 mA Analog Output
[8] Operating Temp. (Non-explosion proof) [1)]		S :	-30 to 85 °C

[1)] This option is just the normal operating temperature of the product and is not related to explosion proof temperature. See “2.6 Certificates” for explosion proof temperature.

2.5 Product Specification

Model		YT-3100	
Housing Material		Body : Aluminum Cover : Polycarbonate	
Motion Type		Linear	Rotary
Acting Type		Single / Double	
Input Signal		4to20mA DC	
Minimum Current Signal		3.2mA	
Supply Pressure		0.14 to 0.7 MPa (1.4 to 7 bar)	
Stroke		10 to 150 mm	55 to 110°
Impedance		Max. 500 Ω @ 20 mA DC	
Conduit Entry		G 1/2	
Air Connection		Rc 1/4 or 1/4 NPT	
Gauge Connection		1/8 NPT	
Ingress Protection		IP66 (excluding the pressure gauges)	
Explosion Protection		1. Non-explosion proof 2. Ex ia IIC T5/T6 Gb : ATEX, IECEx, KCs, NEPSI, CCC	
Ambient Temperature Of Explosion proof	T5	-30 to 60 °C (-22 to 140 °F)	
	T6	-30 to 40 °C (-22 to 104 °F)	
Operating Temperature		-30 to 85 °C (-22 to 185 °F)	
Linearity		± 0.5 % F.S.	
Hysteresis		± 0.5 % F.S.	
Sensitivity		± 0.2 % F.S	
Repeatability		± 0.3 % F.S.	
Flow Capacity		70 LPM (Sup. = 0.14 MPa)	
Air Consumption		Below 2 LPM (Sup. = 0.14 MPa @ idle)	
Output Characteristic		Linear, Quick Open, EQ%, User Set	
Vibration		No Resonance up to 100 Hz @ 6 G	
Humidity		5 to 95 % RH @ 40 °C	
Analog Output (Option)		4-20 mA (DC 9 to 28 V)	
Weight		1.7 kg (3.7 lb)	
Painting of base body		Polyester Powder Coating	

⚠ Tested under ambient temperature of 20 °C, absolute pressure of 760 mmHg, and humidity of 65 %.
Please contact Rotork YTC Limited for detailed testing specification.

2.6 Certifications

※ All certifications below are posted on Rotork YTC Limited homepage (https://www.rotork.com/ytc).

- **KCs (Korea)**
  Type : Intrinsic safety
  Rating : Ex ia IIC T5/T6
  Certification No. : 19-KA2BO-0502X
  Ambient temperature : -30 to +60°C (T5), -30 to +40°C (T6)

- **ATEX**
  Type : Intrinsic safety
  Rating : II 2G Ex ia IIC T5/T6 Gb
  Certification No. : EPS 19 ATEX 1 039 X
  Ambient temperature : -30 to +60°C (T5), -30 to +40°C (T6)

- **IECEx**
  Type : Intrinsic safety
  Rating : Ex ia IIC T5/T6 Gb
  Certification No. : IECEx EPS 19.0016X
  Ambient temperature : -30 to +60°C (T5), -30 to +40°C (T6)

- **NEPSI**
  Type : Intrinsic safety
  Rating : Ex ia IIC T5/T6 Gb
  Certification No. : GYJ24.1273X
  Ambient temperature : -30 to +60°C (T5), -30 to +40°C (T6)

- **CCC (China)**
  Type : Intrinsic safety
  Rating : Ex ia IIC T5/T6 Gb
  Certification No. : 2020322307002522호
  Ambient temperature : -30 to +60°C (T5), -30 to +40°C (T6)

- **Electromagnetic Compatibility (EMC)**
  - EMC directive 2014/30/EC from April 2016
  - EC Directive for CE conformity marking

2.7 Parts and Assembly

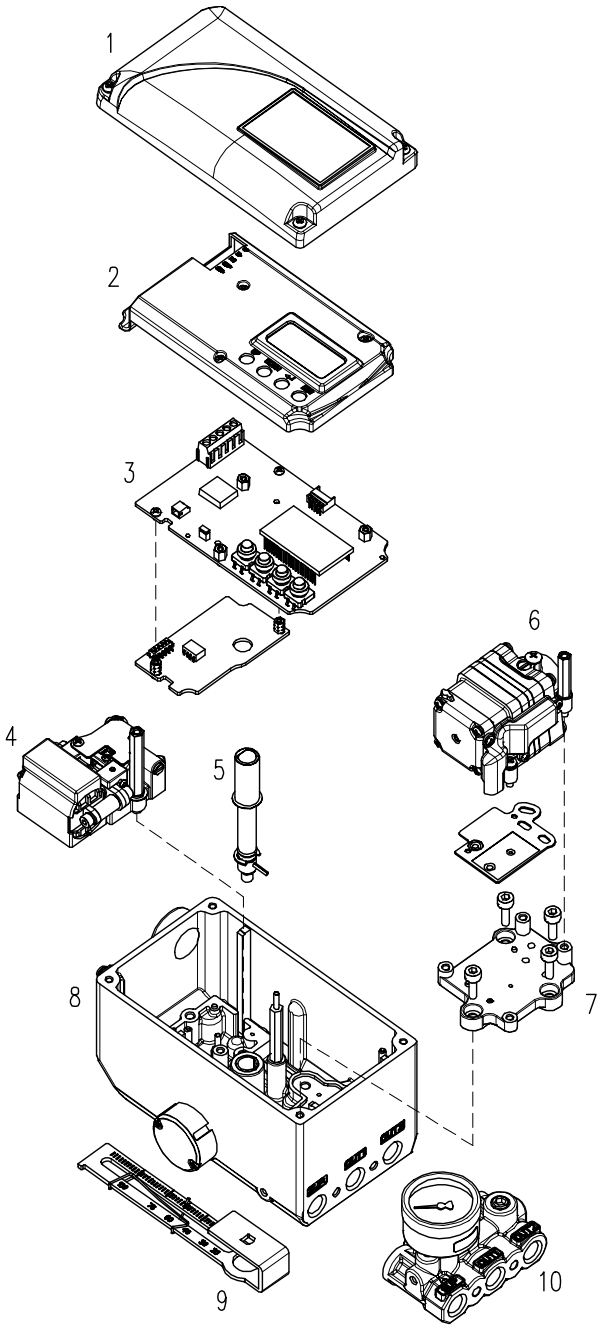

Fig. 2-1: exploded view

1. Base Cover
2. PCB Cover
3. Main PCB
4. Torque Motor
5. Main Shaft
6. Pilot
7. Pilot Block
8. Base body
9. Feedback Lever
10. Gauge Block

2.8 Product Dimension

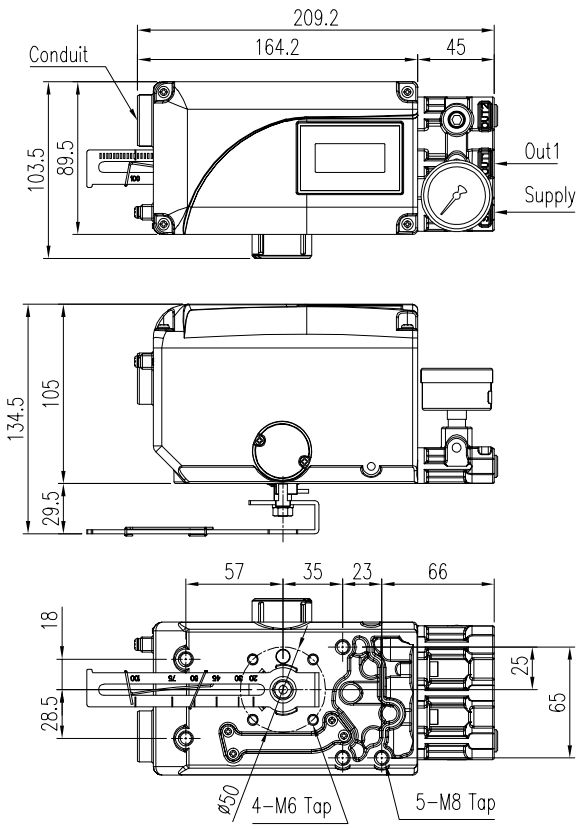

Fig. 2-2: YT-3100L

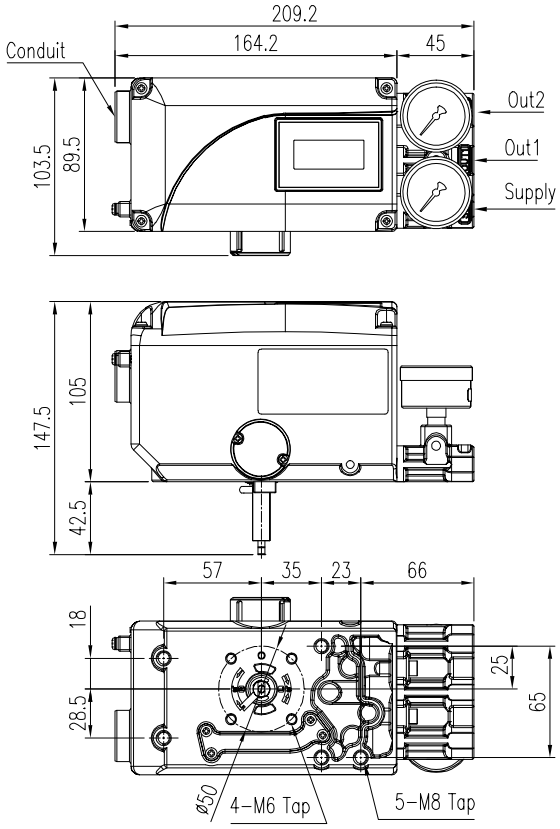

Fig. 2-3: YT-3100R

3 Installation

3.1 Safety

When installing a positioner, please ensure to read and follow safety instructions.

- Any input or supply pressures to valve, actuator, and / or to other related devices must be turned off.
- Use bypass valve or other supportive equipment to avoid entire system “shut down”.
- Ensure there is no remaining pressure in the actuator.
- The positioner has a vent cover to exhaust internal air and drain internal condensation water. When installing the positioner, make sure the vent cover must be facing downward. Otherwise, the condensation water could cause damages to PCB.

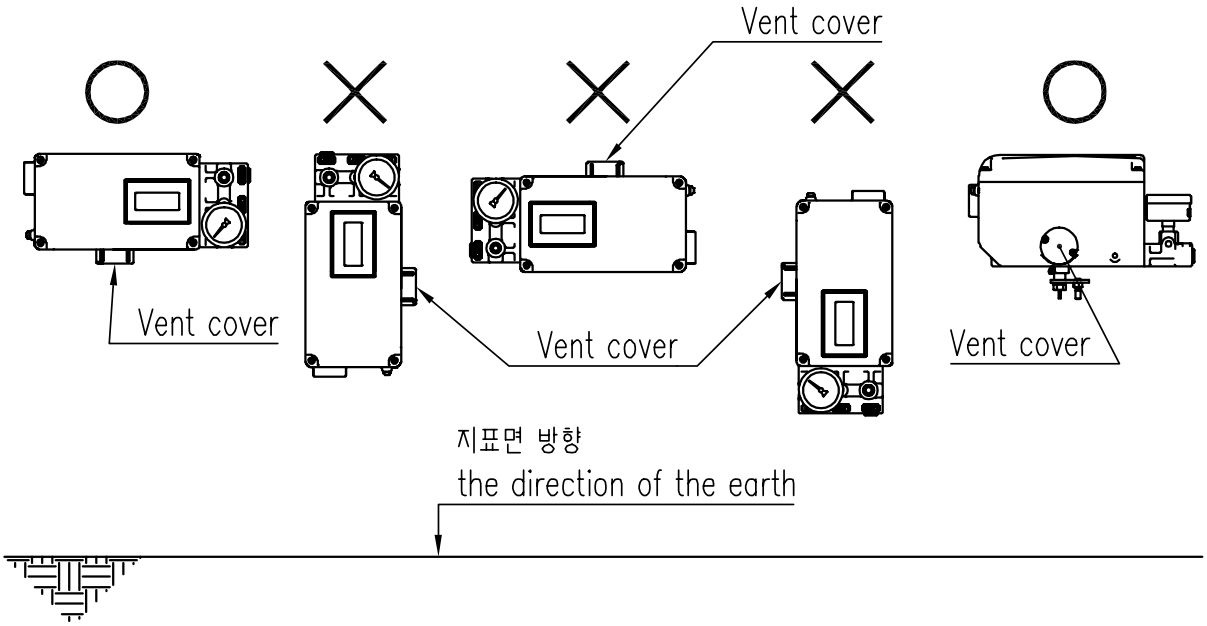

Fig. 3-1: The correct positions of a vent cover

3.2 Tools for installation

- Hex key set for hex socket cap bolts
- (+) & (-) Screw drivers
- Spanners for hexagonal-head bolts

3.3 Linear positioner Installation

Linear positioner should be installed on linear motion valves such as globe or gate type which uses spring return type diaphragm or piston actuators.

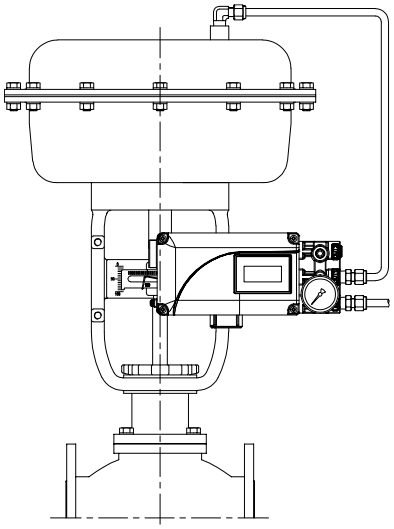

Fig. 3-2: installation example

Before proceeding with the installation, ensure following components are available.

- Positioner
- Feedback lever and lever spring
- M6 nut and spring washer (fastening feedback lever to a main shaft)
- Bracket, bolts and washers for positioner or sensor – not supplied with the positioner
- Connection bar – not supplied with the positioner

3.3.1 Safety

Proper bracket must be made in order to adapt the positioner on the actuator yoke.
Please consider following important points when a bracket is being designed.

- Positioner's feedback lever must be vertical to the valve stem at 50 % of the valve stroke.
- The connection bar of the actuator clamp for the feedback lever should be installed in such a way that the valve stroke length coincides with the corresponding figure in "mm" marked on the feedback lever. Improper setting may cause poor linearity

3.3.2 Standard lever type positioner Installation Steps

1) Assemble the positioner with the bracket made in previous step by fastening the bolts.

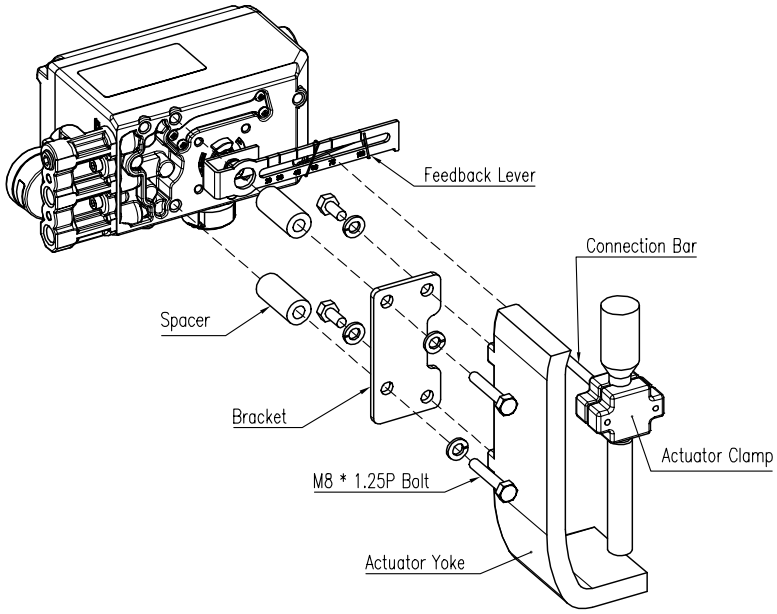

Fig. 3-3: Linear (Standard Lever Type)

2) Attach the positioner with the bracket to the actuator yoke
   – **DO NOT TIGHTEN THE BRACKET COMPLETELY.**

3) Connect connection bar to the actuator clamp. The hole gap on the feedback lever is 6.5 mm so the connection bar's outer diameter should be less than 6 mm.

4) Connect an air-filter regulator to the actuator temporarily. Supply enough air pressure to the actuator in order to position the valve stroke at 50 % of the total stroke.

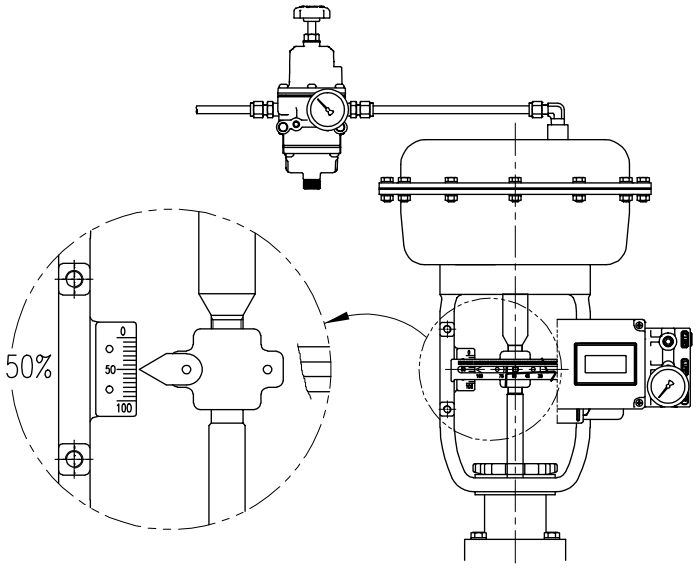

Fig. 3-4: Linear (Standard Lever Type)

5) Insert the connection bar between the feedback lever and lever spring. The connection bar must be located upward from the lever spring as shown below left figure. If it is located downward from the lever spring as shown below right figure, the connection bar or the lever spring will be worn out quickly because of excessive strong tension.

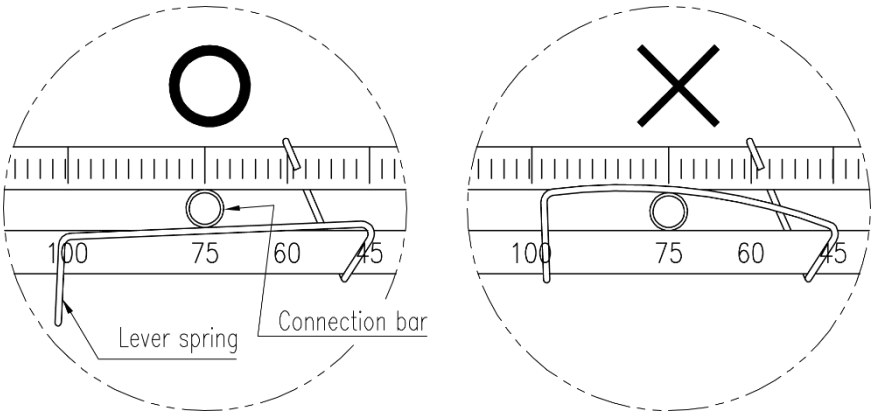

Fig. 3-5: Proper way to insert connection bar between feedback lever and lever spring

6) Check if feedback lever is vertical to the valve stem at 50 % of the valve stroke. If it is not vertical, adjust the bracket or the connection bar to make vertical. Improper installation may cause poor linearity.

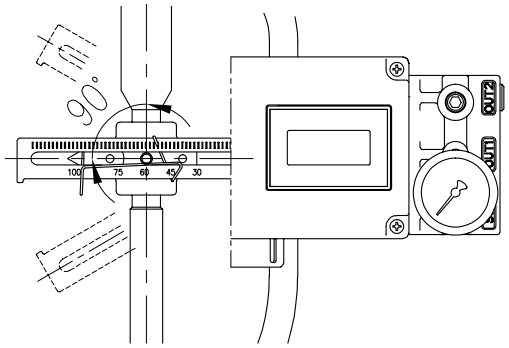

Fig. 3-6: Linear feedback lever and valve stem

7) Check the valve stroke. The stroke numbers are engraved on the feedback lever of the positioner. Position the connection bar at the number on the feedback lever which corresponds with the desired valve stroke. To adjust, move the bracket, the connection bar or both.

※ The effective linear feedback lever angle is 60 degree

Stroke : 75 mm

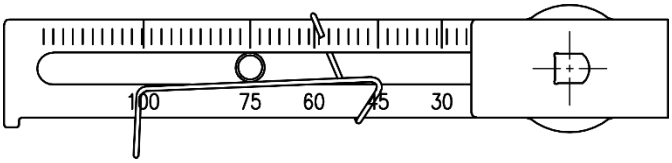

Stroke : 45 mm

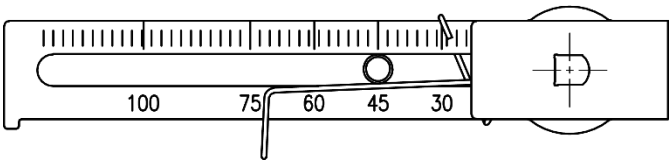

Fig. 3-7: Linear feedback lever and location of the connection bar

8) After installing the positioner, operate the valve from 0 % to 100 % stroke by using direct air to the actuator. On both 0 % and 100 %, the feedback lever should not touch the lever stopper, which is located on the backside of the positioner. If the feedback lever touches the stopper, the positioner should be installed further away from the center of the actuator.

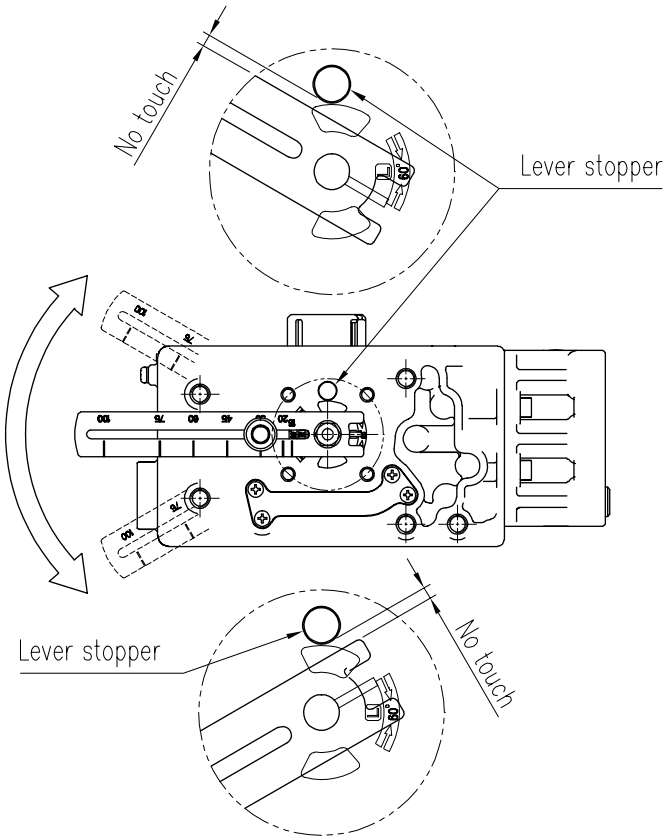

Fig. 3-8: Feedback lever should not touch lever stopper on 0 % to 100 % valve stroke.

9) After the installation, tighten all of the bolts on the bracket and the connection bar.

3.4 Rotary positioner Installation

Rotary positioner should be installed on rotary motion valve such as ball or butterfly type which uses rack and pinion, scotch yoke or other type of actuators which its stem rotates 90 degrees. Before proceeding with the installation, ensure following components are available.

3.4.1 Components

- Positioner
- Rotary bracket set (3 piece)
- 4 pcs x wrench headed bolts (M6 x 1P x 10L) : For the positioner and the upper bracket
- 4 pcs x wrench headed bolts (M6 x 1P x 15L) : For the bracket set
- 4 pcs x M6 nuts : For the bracket set
- 4 pcs x M6 spring washers : For the bracket set
- Bolts and washers to attach the lower bracket to actuator – not supplied with the positioner

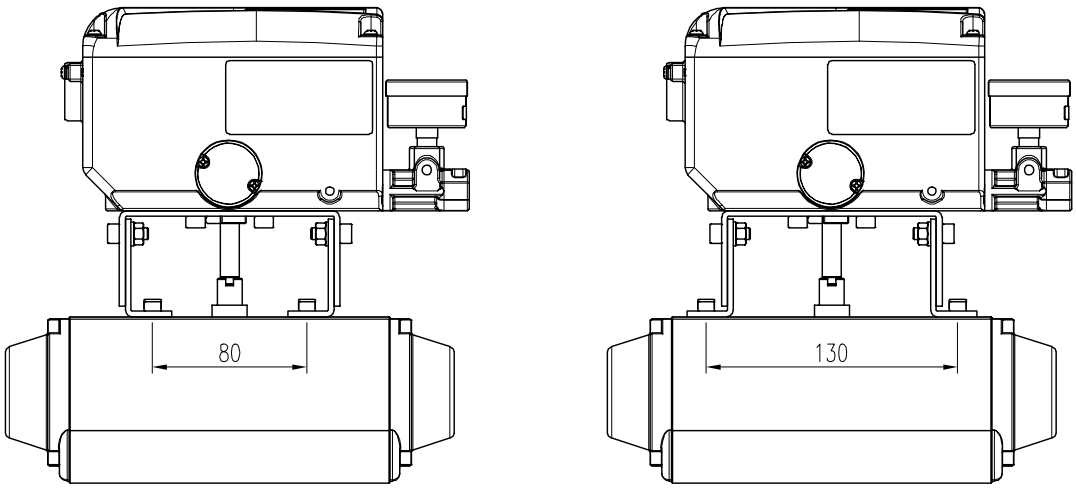

Fig. 3-9: Rotary Namur type

3.4.2 Rotary Bracket Information

The rotary bracket set (included with the positioner) contains three components. The bracket is designed to fit onto the actuator with 20 mm, 30 mm and 50 mm stem height (H) according to VDI/VDE 3845 standard. Please refer to below figure to adjust the height of the bracket.

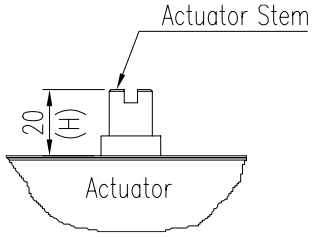

Fig. 3-10: Actuator stem Height

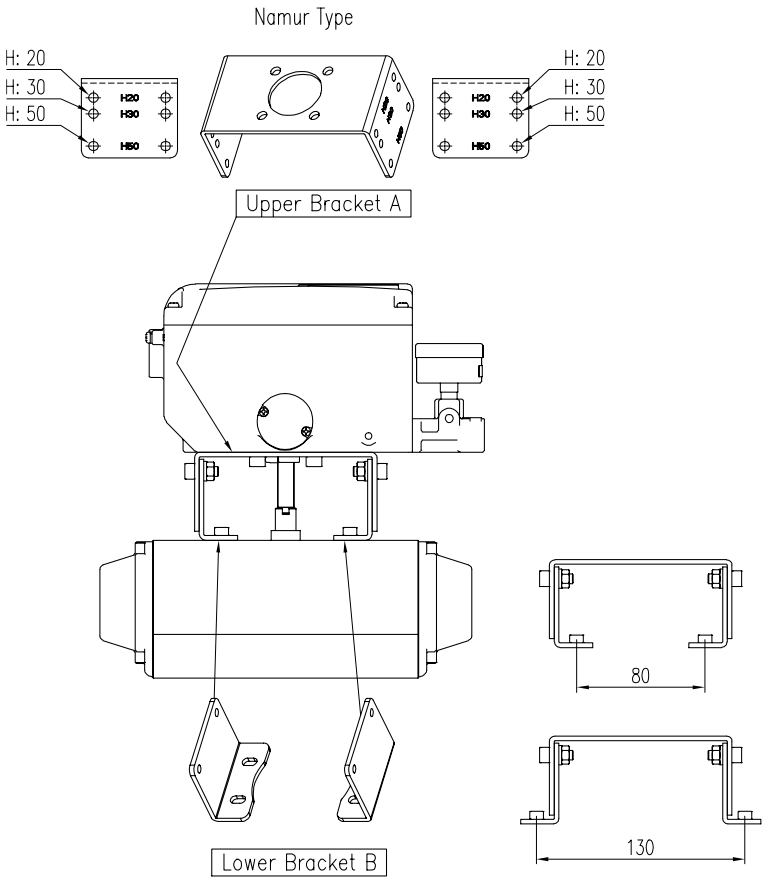

Fig. 3-11: Rotary brackets and positioner

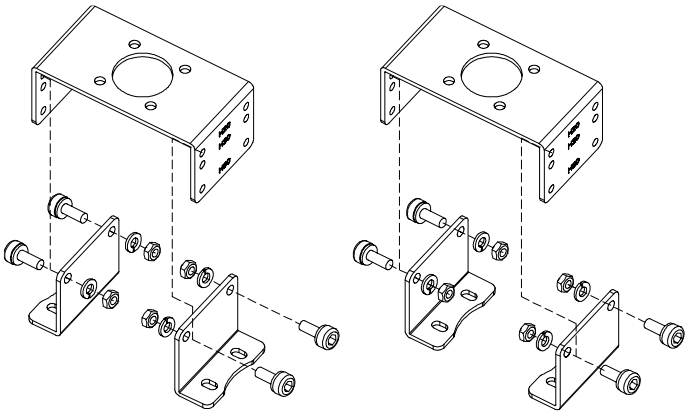

Fig. 3-12: Exploded Brackets

3.4.3 Rotary positioner Installation Steps

1) Please check the actuator's stem height and adjust the brackets by referring to the above bracket table.

2) Attached the brackets onto the actuator. It is recommended to use spring washer so the bolts will not be loosen from vibration.

3) Set rotation position of the actuator stem at 0 %. For single acting actuator, it is easy to check 0 % point by supplying no pressure to the actuator. For double acting actuator, check actuator stem's rotation direction – clockwise or counter-clockwise - by supplying pressure to the actuator.

4) Attach the positioner to the bracket. Setting alignment of center of main shaft of the positioner and center of the actuator's stem is very important. Poor alignment of the main shaft and the actuator's stem decreases the positioner's durability due to unnecessary forces on the main shaft.

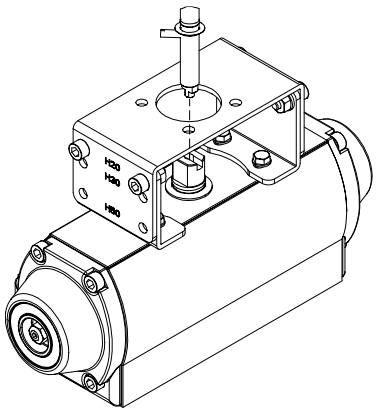

Fig. 3-13: Main shaft center alignment

5) After installing the positioner, operate the valve from 0 % to 100 % stroke by using direct air to the actuator. On both 0 % and 100 %, the indicator should not touch the indicator stopper, which is located on the backside of the positioner. If the indicator touches the indicator stopper, recheck the installation position and angle of the positioner.

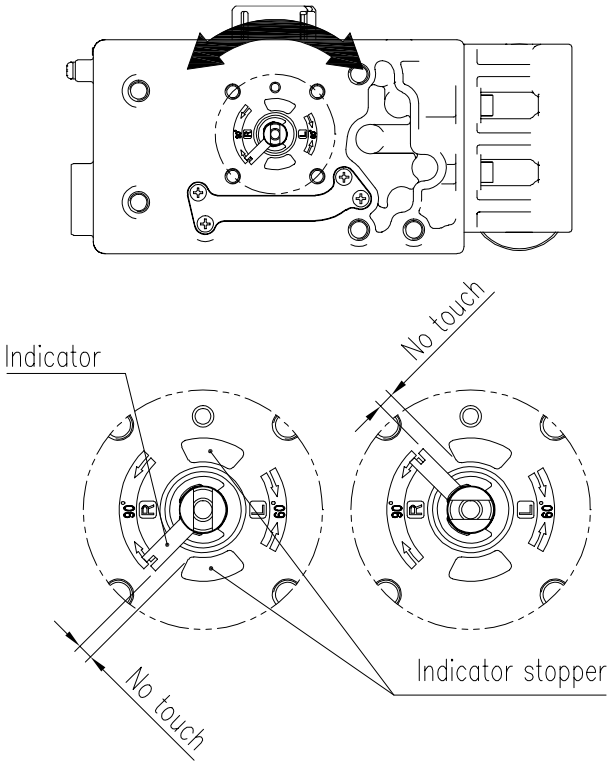

Fig. 3-14: Indicator should not touch indicator stopper on 0 % to 100 % valve stroke.

6) Tighten the positioner and the bracket with bolts **after checking the positioner's position.**

4 Connection - Air

4.1 Safety

- Supply pressure should be clean and dry air – avoiding moisture, oil and dust.
- Always recommended to use air filter regulator (i.e. YT-200 series).
- Rotork YTC Limited **has not tested positioner's operation with any other gases other than clean air. Please contact Rotork YTC Limited for any questions.**

4.2 Supply Pressure Condition



- Dry air with dew point of at least 10 °C lower than ambient temperature.
- Avoid from dusty air. Use 5 micron or smaller filter.
- Avoid oil.
- Comply with ISO 8573-1 or ISA 7.0.01.
- Supply pressure range is 0.14 to 0.7 MPa (1.4 to 7 bar)
- Set air filter regulator's pressure level 10% higher than actuator's spring range pressure.

4.3 Piping Condition



- Ensure inside of pipe is clean of obstructions.
- Do not use pipeline that is squeezed or shows any type of damamges.
- Pipeline should have more than 6 mm of inner diameter (10 mm outer diameter) to maintain flow rate.
- The length of pipeline system should not be extremely long. Longer pipeline system may affect flow rate due to the friction inside of the pipeline.

4.4 Connection – Piping with actuator

4.4.1 Single acting actuator

Singe acting type positioner is set to use only OUT1 port. OUT1 port of positioner should be connected with supply port of actuator when using spring return actuator of single acting type.

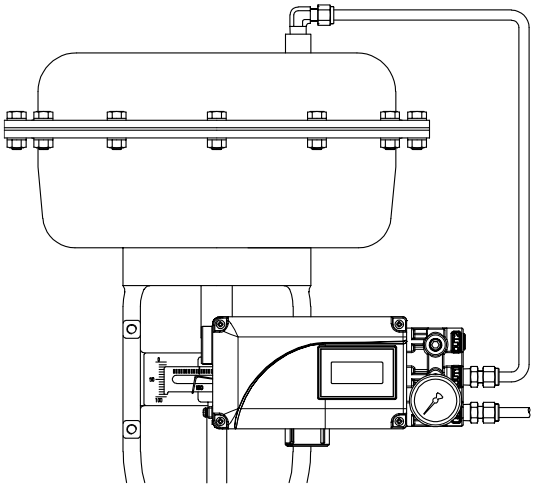

Fig. 4-1: Single acting linear actuator

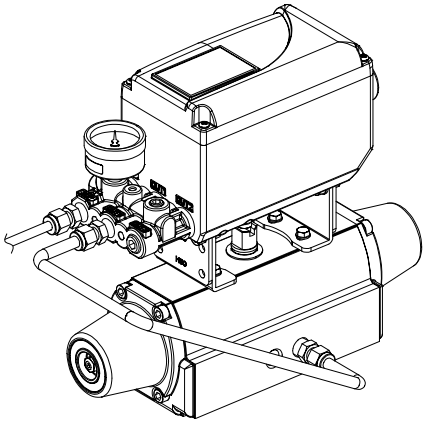

Fig. 4-2: Single acting rotary actuator

4.4.2 Double acting actuator

Double acting type positioner is set to use OUT1 and OUT2 port. As input signal increases, the supply pressure will be supplied through OUT1 port.

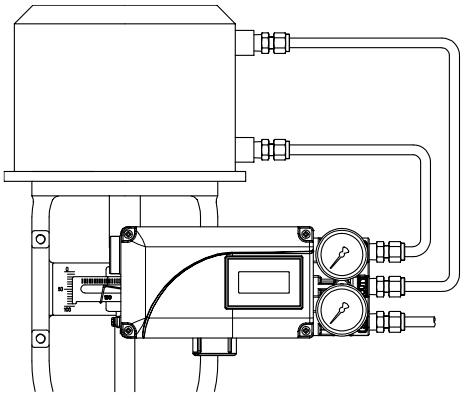

Fig. 4-3: Double acting linear actuator

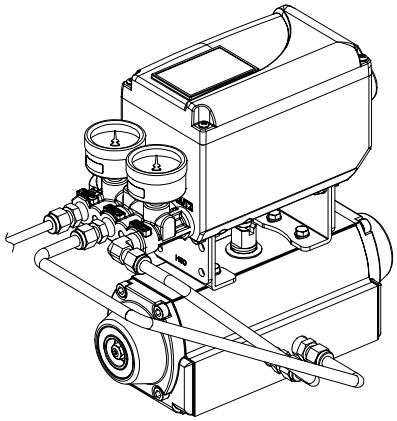

Fig. 4-4: Double acting rotary actuator

5 Connection – Power

5.1 Safety



- There is a conduit entry on the product. See “2.4 Product Code” for conduit entry thread.
- Before connecting terminal, ensure that the power is off completely.
- Please use ring terminal to protect against vibration or any other external impact.
- Positioner usually uses 4-20 mA DC. Minimum ampere of input signal of standard type positioner is 3.2 mA and 4-20 mA Analog Output option positioner’s minimum ampere of input signal is 3.6 mA but maximum ampere of input signal should be 24 mA or under.
- **Compliance voltage of current source must be Min. 10 V and Max. 28 V. If the length of the supply cable between the current source and the positioner is long, or if there is a filter or safety barrier, then consider using a current source which could supply higher Compliance voltage.**
- Positioner with 4-20 mA Analog Output option option must be supplied with **9 to 28 V DC** separately.
- **DO NOT connect Voltage source (9 to 28 V DC) to Input (4-20 mA DC) terminal (IN+, IN-) as it will cause PCB failure.**
- Positioner should be grounded.
- Please use twisted cable with conductor section are 1.25 mm^2 and that is suitable for 600 V (complying with the conductor table of NEC Article 310.) The outer diameter of the cable should be between 6.35 to 10 mm. Use shield wire to protect against electro-magnetic field and noise.
- Please do not install the cable near high noise equipment, such as high-capacity transformer or motor.
- Please ensure that keep away magnetic materials from a product. It may cause malfunction. For a magnetic screwdriver, It must be away more than 30 cm from the positioner.

5.2 Connection

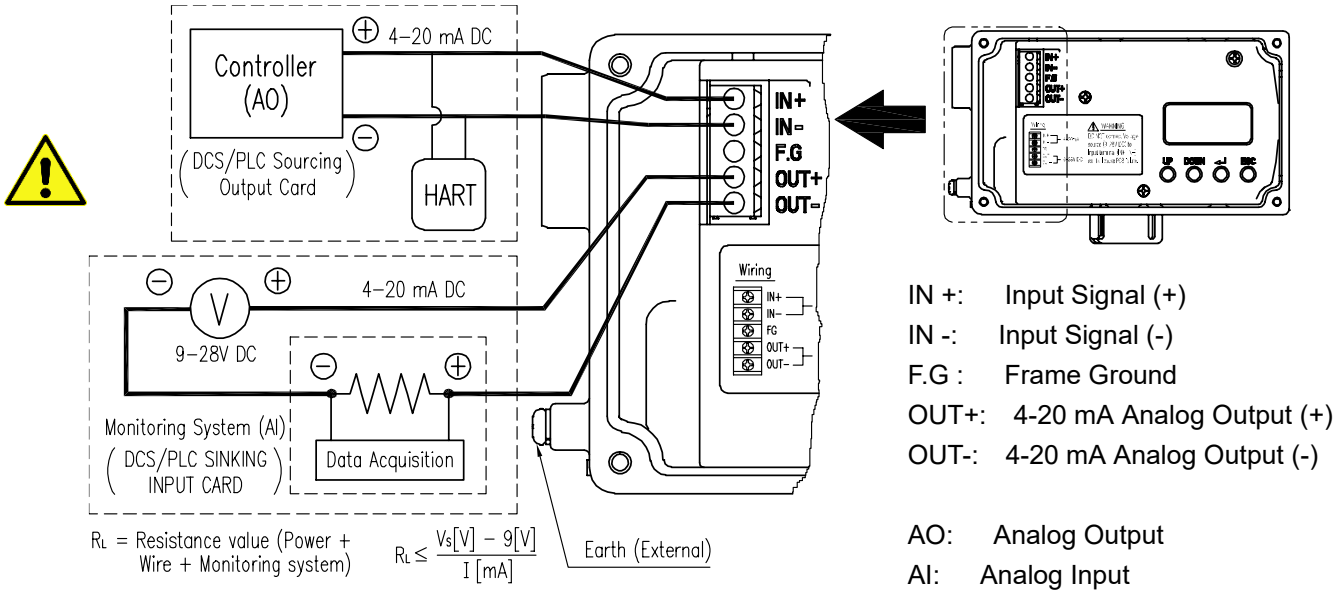

IN +: Input Signal (+)
IN -: Input Signal (-)
F.G : Frame Ground
OUT+: 4-20 mA Analog Output (+)
OUT-: 4-20 mA Analog Output (-)

AO: Analog Output
AI: Analog Input
Vs: Voltage Source

Fig. 5-1: Terminal Overview

5.3 Ground

1) Ground must be done before operating the positioner.
2) Open base cover and there is an internal ground “F.G” on the left hand.
   An external ground bolt is located next to the conduit entry. Please make sure that the resistance is less than 100 ohm.

6 Adjustments

6.1 Orifice Installment

Hunting can be occurred when the actuator's volume is too small. In order to prevent hunting, orifice can be used.

6.1.1 Plate type Orifice Installment

By installing the plate type orifice, the flow rate of the supply pressure to actuator can be reduced. The diameter of orifice hole is 1 mm.

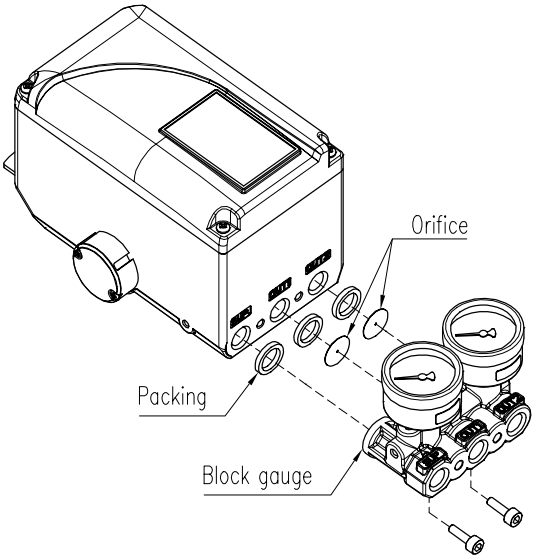

Fig. 6-1: Plate type Orifice installment

7 Optional Sub-PCB Installment

By adding sub-PCB, the positioner can have an additional 4-20 mA Analog Output option function.

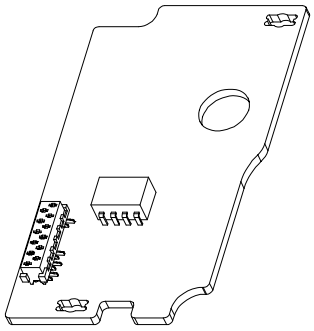

Fig. 7-1: Sub-PCB of 4-20 mA Analog Output

When purchasing option a sub-PCB separately, 4 Bolts and 2 supports are supplied together with sub-PCB.

7.1 Installation steps

1) Mount 2ea of sub-PCB support on sub-PCB with 2ea of bolt.
2) Open base cover, PCB cover. Separate the Main PCB from base body.
3) Insert connector of sub-PCB into connector of main PCB correctly.
4) Fasten sub-PCB with the rest of bolt 2ea.

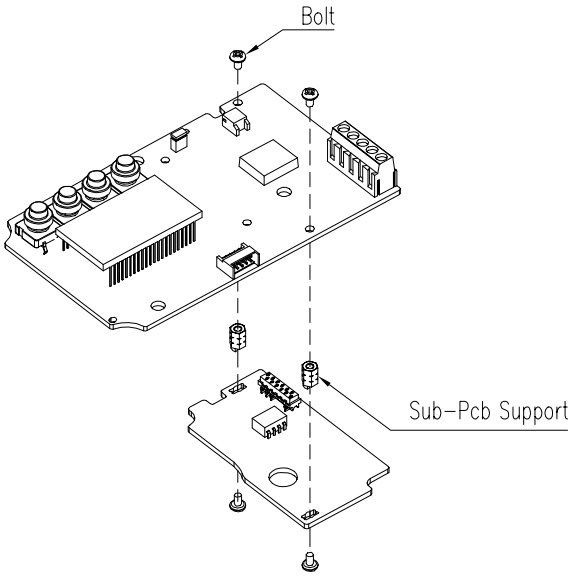

Fig. 7-2: Installation of Option PCB on Main PCBs

5) After 4-20 mA Analog Output sub-PCB is installed newly, values of PTM ZERO and PTM ENd must be calibrated for correct output signals. For the calibration of PTM ZERO and PTM ENd, please refer to section “9.10.2 Position Transmitter Zero / End” of this manual.

8 Maintenance

8.1 Supply air

If Supply air pressure is not stable or Supply air is not clean, the positioner may not function properly. Air quality and pressure should be checked regularly to see if the air is clean and pressure set is normal.

8.2 Seals

Once a year, it is recommend to check if there are any damaged parts of the positioner. If there are damaged rubber parts such as diaphragms, o-rings and packings, replace with new ones.

9 Auto Calibration and Operation

9.1 Warning

- **Auto Calibration must be performed after the valve and positioner are installed in the facility/process during the commissioning phase or when the positioner is dismounted and then newly mounted on the actuator.**
- **Since the Auto Calibration moves the valve and actuator, the valve must be isolated from the process before Auto Calibration to avoid process interruption.**

9.2 LCD display and buttons

9.2.1 LCD display and symbols

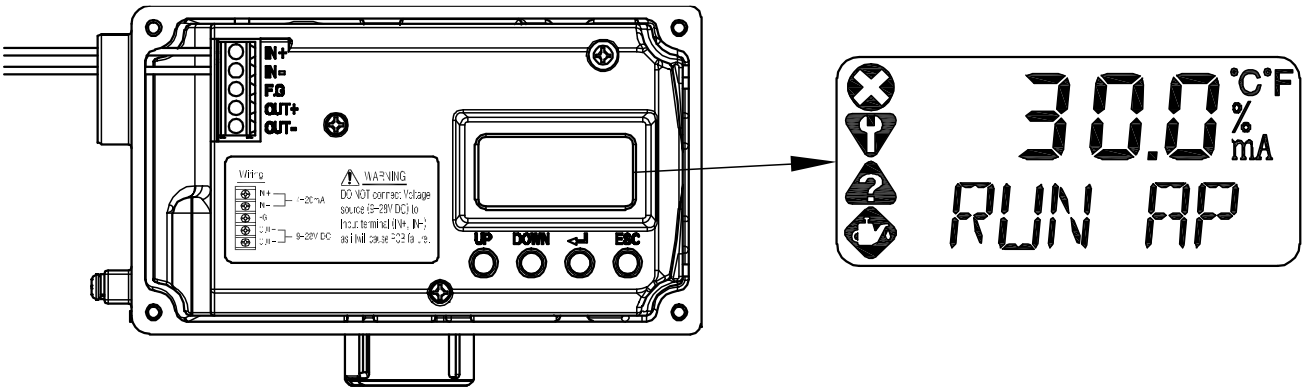

Fig. 9-1:

Symbols	Description	Symbols	Description
	Failure	°C	Degree in Celsius
	Functional Check	°F	Degree in Fahrenheit
	Out of Specifications	%	Percent
	Maintenance Required	mA	Current in mA

The four symbols located on the left are the symbols that display alarm messages classified in four groups in accordance with NAMUR NE107.

9.2.2 Button and function

Positioner has 4 buttons, and they enable to perform various functions.

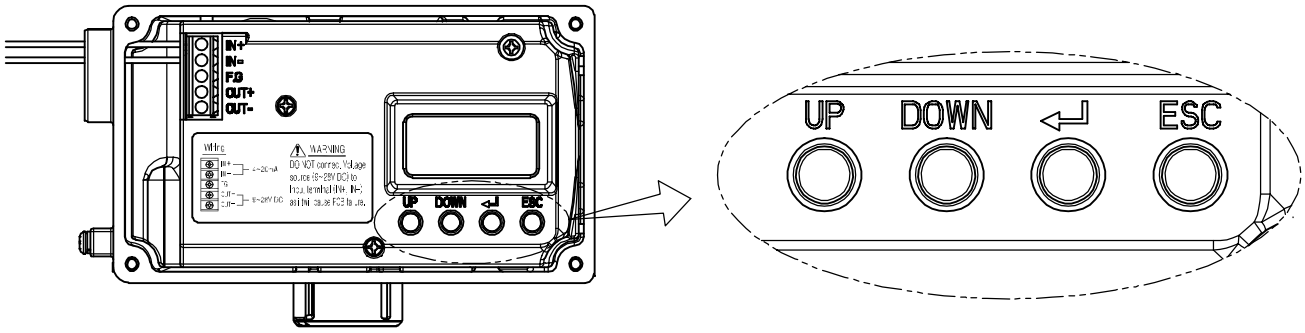

Fig. 9-2:

Buttons	Function
UP	Used to navigate to each menu at the same level or to increase the value of the selected parameter.
DOWN	Used to navigate to each menu at the same level in reverse order of UP button or to decrease the value of the selected parameter.
< ↵ > ENTER	Use to select the current menu or function, or to store the value of a modified parameter.
ESC	Used go directly to parent menu from current menu.

9.3 Menu levels

The basic menu structure consists of the RUN Mode Monitor and the Configuration/Operation. The Run Mode Monitor menu allows you to monitor the values of various variables. The Configuration/Operation menu provides calibration and tuning, manual operation, configuration of I/O port function, configuration and self-test of positioner, configuration of diagnostic function, and basic information of the positioner. See below for information on how to move between Run Mode Monitor menu and Configuration/Operation menu, and move within Run Mode Monitor menu.

Press <↵> for more than 3 seconds in Run Mode to go to Configuration/Operation.

Run Mode Monitor	
RUN AP	Actual Position
RUN TP	Target Position
RUN dV	Deviation Value
RUN IV	Integral Output Value
RUN MV	Manipulator Value
RUN TEMP	Temperature
GOOd	Device / Process Status
RUN IN	Input Current
RUN SP	Set Position

ESC <↵>

UP/DN

ESC+UP/DN

Configuration and Operation	
CALIb	Calibration
MAN OPER	Manual Operation
CTRL PARM	Control Parameter
IN CFG	Input Configuration
OUT CFG	Output Configuration
dEV CFG	Device Configuration
dIAGNO	Diagnosis
INFO	Information

Press the <↵> button to select the lower menu of the Configuration/Operation menu. Press the ESC button to return to parent menu after completing configuration. Pressing the ESC button anywhere in the menu structure several times returns the user to the uppermost menu, Run Mode Monitor menu.

9.4 RUN Mode Monitor

The RUN Mode Monitor is displayed on the LCD display when power is provided to the positioner. Pressing the UP/DOWN button scrolls through the various process variables shown in table below. A "30.0%" in the LCD display below indicates that the valve is in the 30 % position, and an "AP" indicates the abbreviation of "Actual Position".



The status variables displayed in the RUN Mode Monitor are divided into nine types as shown below.

On LCD	Name	Description
RUN AP [%]	Actual Position	Actual position of the valve indicated as %.
RUN TP [%]	Target Position	Target position in %
RUN dV [%]	Deviation Value	Deviation between target position and actual position.
RUN IV	Integral Output Value	Accumulated integral output value
RUN MV	Manipulator Value	Digital input value applied to I/P converter
RUN TEMP[℃]	Temperature	Internal temperature of positioner in °C.
** dS XXXX (PS XXXX)	**: Alarm Code dS: Device Status PS: Process Status XXXX: Alarm abbreviation	The status of the current process or positioner is shown with English letter XXXX. Normally, GOOd is displayed when there is no problem, but alarm or status is displayed in abbreviated words (MNTR, FAIL, OUTS, FUNC and so on) along with NE107 symbol when a state change or alarm occurs. Any of the alarms is displayed alternately each time the ENTER button is pressed. (See 9.15 Status and Alarm Code)
RUN IN [mA]	Input Current	Current input signal in mA
RUN SP [%]	Set Position	Input signal converted into %

When there is no alarm.



When an alarm occurs.

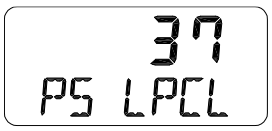

Explaining contents of alarm display

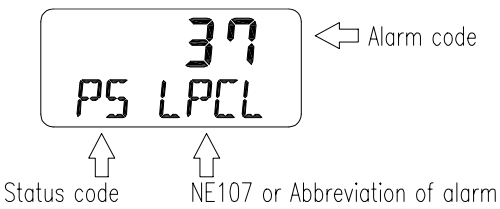

9.5 Configuration and Operation

The Table below shows the eight Configuration/Operation menus, each submenu, ranges for each parameter, and initial factory settings. The words shown in [ ] for each menu represent the abbreviations of each word displayed when operating the LCD screen.

Level 1	Level 2	Range	Initial factory setting
Calibration [CALIb]	Acting Type	[SINGLE, dOUbLE]	
	Auto Calibration 1 [AUTO 1]		
	Auto Calibration 2 [AUTO 2]		
	Auto Calibration 3 [AUTO 3]		
	Travel Zero [TVL ZERO]		
	Travel End [TVL ENd]		
Manual Operation [MAN OPER]	Manual Operation by Set Position [MAN SP]		
	Manual Operation by Manipulator Value [MAN MV]		
Control Parameters [CTL PARM]	Dead Band [dEAdbANd]	0.1 to 10.0 [%]	0.3 %
	Proportional Gain, Upward [KP UP]	0.1 to 50.0	1
	Proportional Gain, Downward [KP dN]	0.1 to 50.0	1
	Integral Gain, Upward [TI UP]	0.1 to 50.0	1
	Integral Gain, Downward [TI dN]	0.1 to 50.0	1
	Differential Gain, Upward [Kd UP]	0.1 to 50.0	1
	Differential Gain, Downward [Kd dN]	0.1 to 50.0	1
	Auto Dead Band Mode [AUTO db]	oFF, [0%]	oFF
	Performance Mode [PER]	Stable, Normal, Fast [STbL, NORM, FAST]	NORM
Input Configuration [IN CFG]	Signal Direction [SIG]	Normal, Reverse [NORM, REVS]	NORM
	Split Range Mode [SPLIT]	4-20, 4 to 12, 12 to 20, Custom [4.20, 4.12, 12.20, CSt]	4.20
	Custom Split Range Zero [CST ZERO]	4-20.0 [mA]	4 mA
	Custom Split Range End [CST ENd]	4-20.0 [mA]	20 mA

Level 1	Level 2	Range	Initial factory setting
Input Configuration [IN CFG]	Characterization [CHAR]	Linear, Quick Open, Equal Percent, User Set 5point, User Set 21point [LIN, QO, EQ, U5, U21]	LIN
	User Set Characterization 5p [USER 5P]	0 to 110[%]	0 %, 25 %, 50 %, 75 %, 100 %
	User Set Characterization 21p [USER 21P]	0 to 110[%]	0 %, 5 %, 10 %, … 95 %, 100 %
	Tight Shut Open [TSHUT OP]	0 to 100 [%]	100.0 %
	Tight Shut Close [TSHUT CL]	0 to 100 [%]	0.3 %
Output Configuration [OUT CFG]	4-20 mA Analog Output Direction [PTM]	[NORM, REVS]	NORM
	4-20 mA Analog Output Zero [PTM ZERO]	0 to 100.00 [%]	
	4-20 mA Analog Output End [PTM ENd]	0 to 100.00 [%]	
	Back Calculation [bAKCAL]	[oFF, on]	oFF
Device Configuration [dEV CFG]	Action [ACT]	[dIR, REVS]	REVS
	Linear Interpolation [ITP]	[oFF, on]	on with Linear oFF with Rotary
	Write Protect [W]	[UNLOCK, LOCK]	UNLOCK
	View Mode [VI]	[NORM, REVS]	NORM
	Factory Reset [dEFAULT]		
	Self-Test [SELFTEST]		
Diagnosis [dIAGNO]	Device Status [dS]	GOOd, Refer to 9.15 Status and Alarm Code.	GOOd
	Reset Alarm Status [RST ALRM]		
	View Event Log [EVT LOG]	RECORd 1 - 10	1
Information [INFO]	Model Name [YT3100*]		
	Firmware Version [SOFT VER] Download Date	*.*.** YYYYMMDD	Program current version Program input date
	Run Time [RT]	*.** RT *d	
	Upward Stroke Time [FULL OP]	**.**	
	Downward Stroke Time [FULL CL]	**.**	
	Position Sensor Type [PSNT]	PTN, NCS	
	Absolute Position in Angle [AbS ANGL]	***.* °	

9.6 Calibration (CALIb)

The calibration consists of five menus.

Calibration [CALIb]	Acting Type [SINGLE/ dOUbLE]	Set manually single or double acting by actuator type
	Auto Calibration 1 [AUTO 1]	Calibration on the zero and end points of the valve
	Auto Calibration 2 [AUTO 2]	Calibration on all parameters required to operate the valve
	Auto Calibration 3 [AUTO 3]	Calibration on zero point, end point and control parameters required to operate the valve
	Travel Zero [TVL ZERO]	Manually adjust the zero point of the valve
	Travel End [TVL ENd]	Manually adjust the endpoint of the valve

Auto Calibration simplifies calibration without having to go through complex gain tuning. Once the current input between 4 and 20 mA is applied, it takes approximately 2 to 3 minutes to complete the automatic calibration, which may vary depending on the size of the actuator. There are two types of Auto Calibrations as shown below so that you select and use them as required.

※ Parameters reset after completion of Auto Calibration

Menu	Parameters	AUTO1	AUTO2	AUTO3
Calibration [CALIb]	Travel Zero [TVL ZERO]	O	O	O
	Travel End [TVL END]	O	O	O
Control Parameters [CTL PARM]	Dead Band [dEAdbANd]	X	O	O
	Proportional Gain, Upward [KP UP]	X	O	O
	Proportional Gain, Downward [KP dN]	X	O	O
	Integral Gain, Upward [TI UP]	X	O	O
	Integral Gain, Downward [TI dN]	X	O	O
	Differential Gain, Upward [Kd UP]	X	O	O
	Differential Gain, Downward [Kd dN]	X	O	O
Input Configuration [IN CFG]	Signal Direction [SIG]	X	O	X
Output Configuration [OUT CFG]	4-20 mA Analog Output Direction [PTM]	X	O	X
Device Configuration [dEV CFG]	Action [ACT]	X	O	X
	View Mode [VI]	X	O	X
	Linear Interpolation [ITP]	O	O	O
-	BIAS	X	O	O

9.6.1 Acting Type (SINGLE / dOUBLE)

This is used to change the settings of the positioner to SINGLE or dOUBLE, depending on the actuator type. The setting of the SINGLE and dOUBLE affects the automatic calibration, so it must be set carefully considering the actuator type.

When the actual acting types of Actuator is different with the setting values, make sure to fit the actual acting type with the currently operating Actuator type as the certain performance troubles may incur.

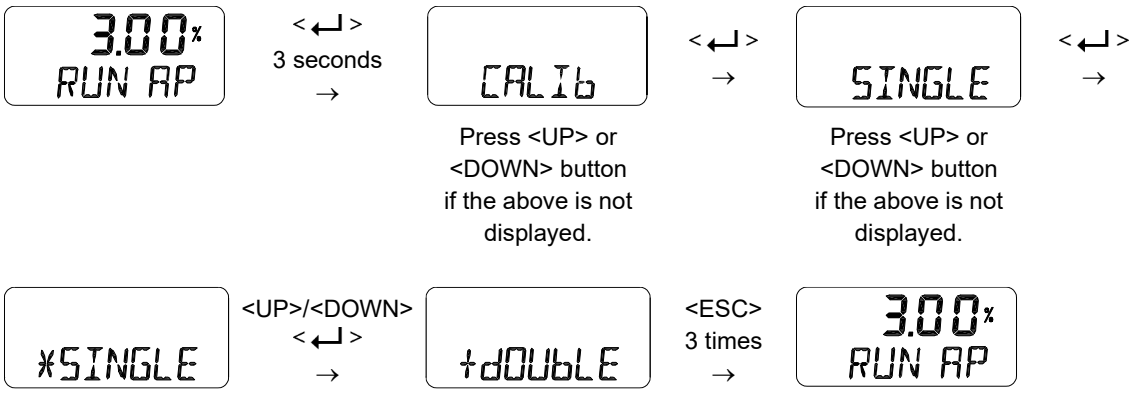

9.6.2 Auto Calibration 1 (AUTO 1)

AUTO 1 is used to set only the origin and end points. It does not change the PID and other parameter values that already have been set. This is usually used when the origin and end points of the already calibrated positioner have changed slightly.

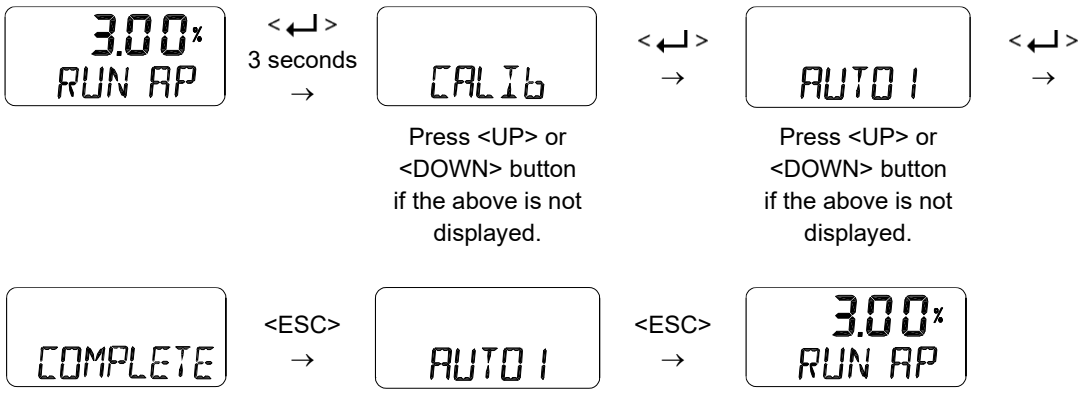

※ Parameters reset after completion of Auto Calibration 1

Menu	Parameters	Description
Calibration [CALIb]	Travel Zero [TVL ZERO]	The valve stroke reset to the zero point when the pressure in the OUT1 port is completely released.
	Travel End [TVL ZERO]	The valve stroke reset to the end point when the pressure in the OUT1 port is fully filled.

9.6.3 Auto Calibration 2 (AUTO 2)

AUTO 2 tunes up and then changes all parameters required for valve operation. Be sure to perform this AUTO 2 when installing the positioner on the valve for the first time or when reinstalling the positioner from the actuator.

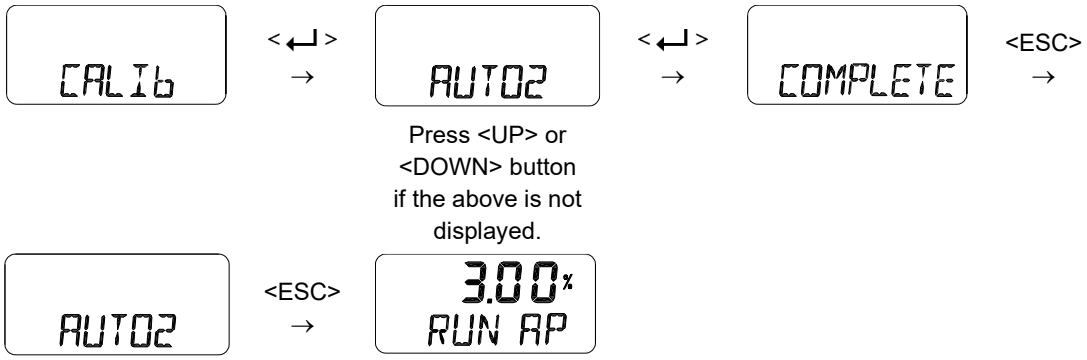

※ Parameters reset after completion of Auto Calibration 2

Menu	Parameters	Description
Calibration [CALIb]	Travel Zero [TVL ZERO]	The valve stroke reset to the zero point when the pressure in the OUT1 port is completely released.
	Travel End [TVL ZERO]	The valve stroke reset to the end point when the pressure in the OUT1 port is fully filled.
Control Parameters [CTL PARM]	PID Parameter [KP UP], [KP dN] [TI UP], [TI dN] [Kd UP], [Kd dN]	Applied after automatically calculating the PID value according to the valve or actuator.
Input Configuration [IN CFG]	Signal Direction [SIG]	Initialized in normal direction.
Output Configuration [OUT CFG]	4-20 mA Analog Output Direction [PTM]	Initialized in normal direction.
Device Configuration [dEV CFG]	Action [ACT]	Initialized in normal direction.
	View Mode [VI]	Initialized in normal direction.
	Linear Interpolation [ITP]	Automatically set On/Off according to the angle of use of the feedback lever (On when feedback lever use angle > 20°)
-	BIAS	It is automatically calculated and applied depending on the valve or actuator.

9.6.4 Auto Calibration 3 (AUTO 3)

AUTO 3 tunes up and then changes all parameters required for valve operation. It is mainly used when valve characteristics change during valve operation or due to aging.

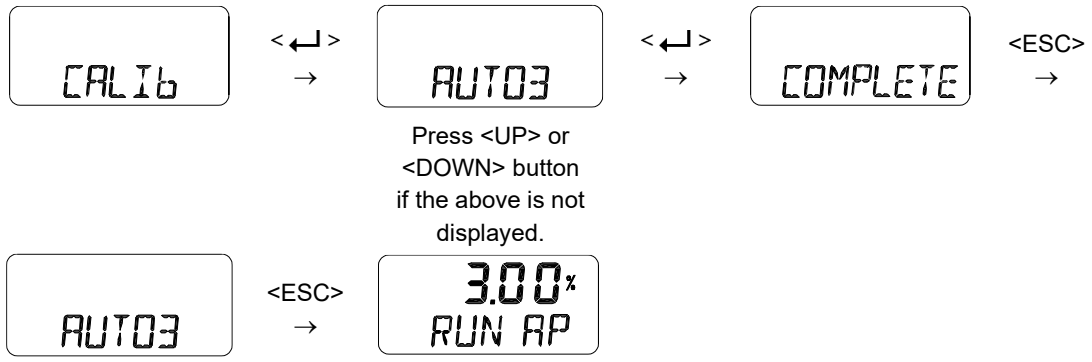

※ Parameters reset after completion of Auto Calibration 3

Menu	Parameters	Description
Calibration [CALIb]	Travel Zero [TVL ZERO]	The valve stroke reset to the zero point when the pressure in the OUT1 port is completely released.
	Travel End [TVL ZERO]	The valve stroke reset to the end point when the pressure in the OUT1 port is fully filled.
Control Parameters [CTL PARM]	PID Parameter [KP UP], [KP dN] [TI UP], [TI dN] [Kd UP], [Kd dN]	Applied after automatically calculating the PID value according to the valve or actuator.
Device Configuration [dEV CFG]	Linear Interpolation [ITP]	Automatically set On/Off according to the angle of use of the feedback lever (On when feedback lever use angle > 20°)
-	BIAS	It is automatically calculated and applied depending on the valve or actuator.

9.6.5 Travel Zero (TVL ZERO) and Travel end (TVL ENd)

This is a manual adjustment of the zero point or endpoint of the valve after auto calibration. Once you enter the TVL ZERO (or TVL ENd) setting, press the UP/DOWN button to change the zero point (or endpoint) of the valve, and then press the ENTER button to save it. The saved position is recognized as the zero (or endpoint) of the valve.

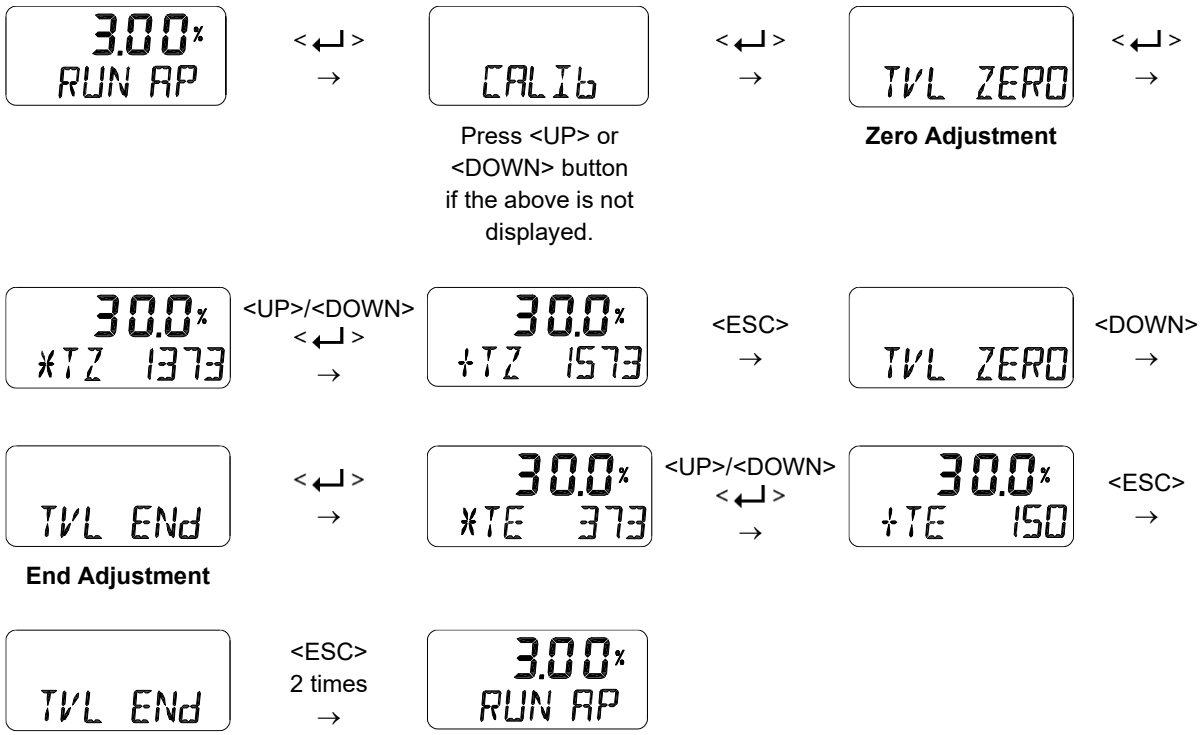

9.7 Manual Operation (MAN OPER)

It is used to manually raise or lower the valve stem by operating the UP or DOWN buttons. This can be used to observe the move of valve stem without any external input signals. When engaged, the current input signal to the positioner has no effect on the positioner.

Use the Manual only when the operation is suspended, or when no trouble is raised with the operation of Control Valve, as the execution of Manual Mode may interfere with the currently operating process.

9.7.1 Manual Operation by Set position (MAN SP)

The target position is incremented by the UP and DOWN buttons based on the currently entered set position values, which moves the stem of the valve up and down. Once out of the menu by <ESC>, the positioner is controlled again by an input signal.

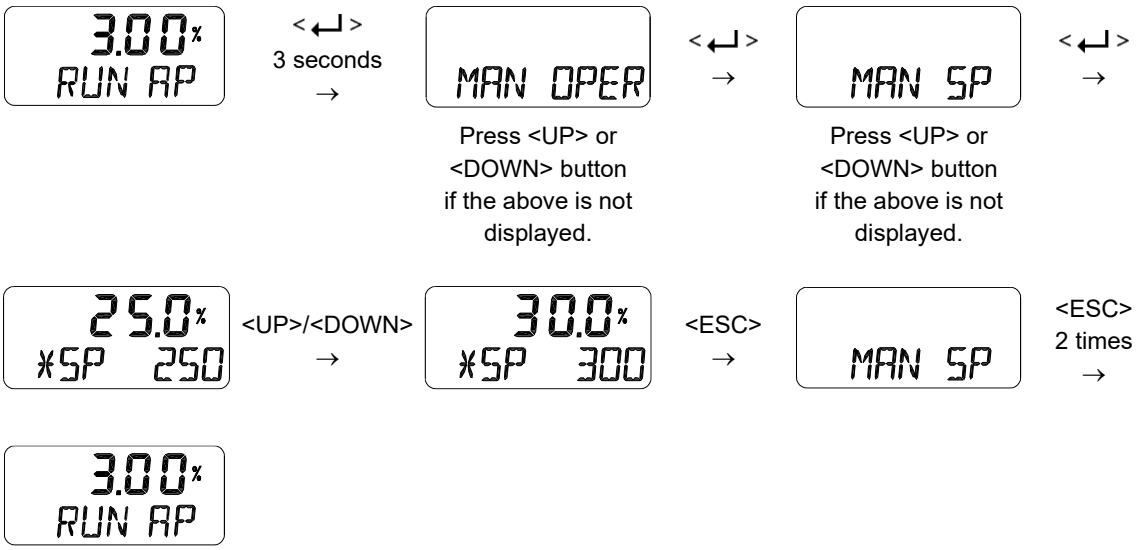

9.7.2 Manual Operation by Manipulator Value (MAN MV)

The input to I/P converter is incremented or decremented by the UP and DOWN buttons based on the currently entered I/P input value, which moves the stem of the valve up and down. Once out of the menu by <ESC>, the positioner is controlled again by an input signal.

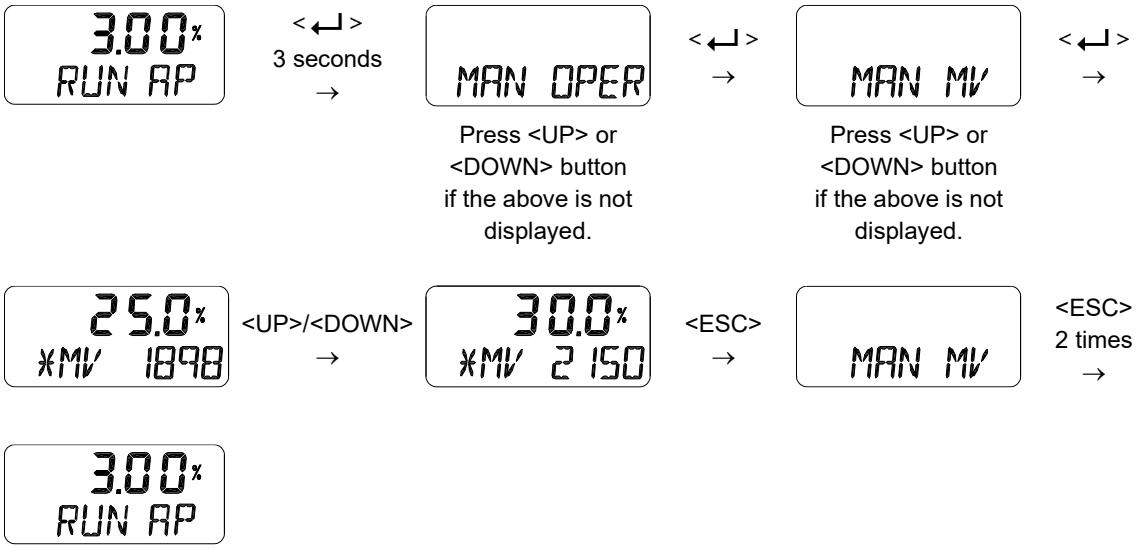

9.8 Control Parameters (CTL PARM)

Followings are the values changeable at the Control Parameters Mode.

1) Dead Band (dEAdbANd)
2) Forward P parameter (KP UP) and reverse P parameter (KP dN)
3) Forward Integral time parameter (TI UP) and reverse Integral time parameter (TI dN)
4) Forward D parameter (Kd UP) and reverse D parameter (Kd dN)
5) Auto Dead band Mode (AUTO db)
6) Performance Mode (PER)

9.8.1 Dead Band (dEAdbANd)

Deadband indicates the size of the allowable deviation that is set near the target position. If the valve has large packing friction, this value can be adjusted and set accordingly to prevent the limit cycle caused by the friction. If the deadband is set to 0.5 %, its range is ± 0.5 % of the target.

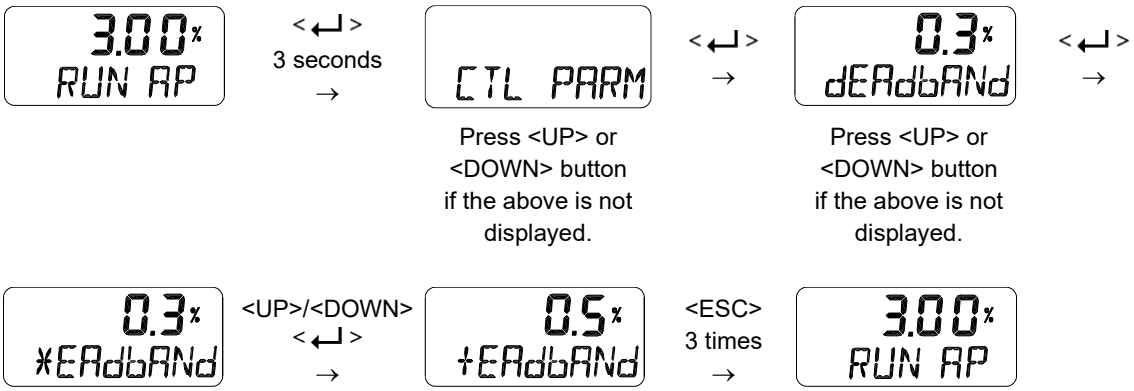

9.8.2 Forward P parameter (KP UP) and reverse P parameter (KP dN)

The KP parameter is the proportional control constant to the calibration signal to reduce the error between the target position and the current position, the KP UP is applied when the valve moves in the direction of increasing output air pressure, and KP dN is applied when the valve moves in the direction of venting output air pressure. A larger value of gains "KP UP" or "KP dN" moves the valve faster to reach a target position, but will tend to oscillate it if set to high. However, smaller gains improve stability, but make it slower to reach a target position.

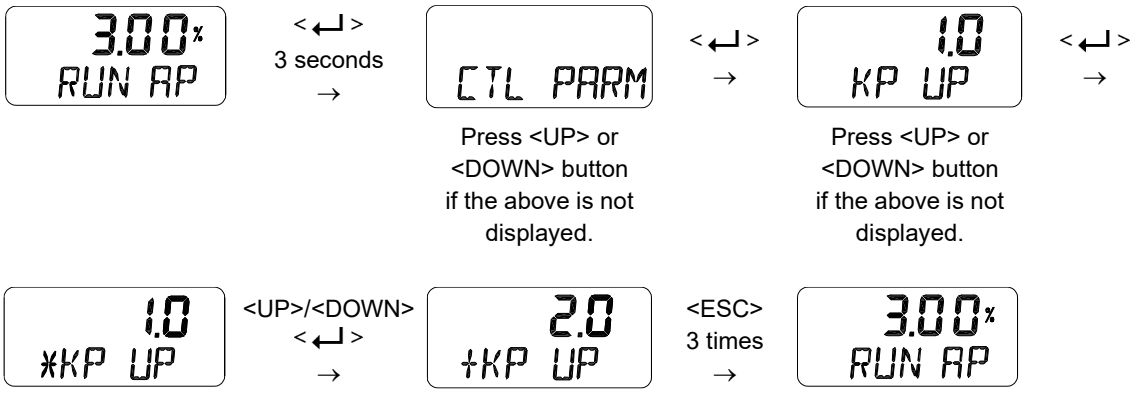

9.8.3 Forward Integral time parameter (TI UP) and reverse Integral time parameter (TI dN)

TI parameters are an integral value that add the error correction signal to the existing calibration signal, TI UP is applied when the valve moves in the direction of increasing the output air pressure, and TI dN is applied when the valve moves in the direction of decreasing the output air pressure. A smaller TI makes the valve faster to reach a target position and tends to cause oscillation.

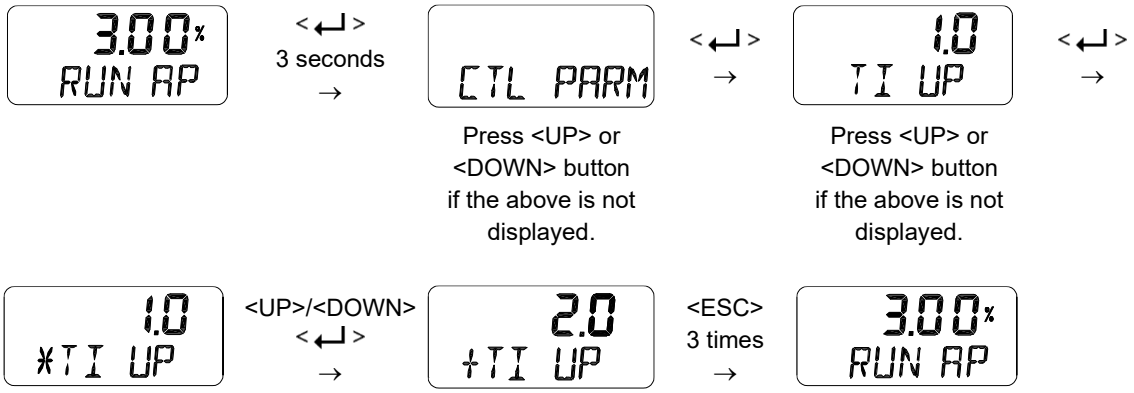

9.8.4 Forward D parameter (Kd UP) and reverse D parameter (Kd dN)

The Kd parameter is a differential value that adds the correction signal due to the rate of error to the existing calibration signal. Kd UP is applied when the valve moves in the direction of increasing output air pressure, and Kd dN is applied when the valve moves in the direction of decreasing output air pressure. A larger D value makes the valve hunting easier, and a smaller value can lead to poor linearity or dynamic properties.

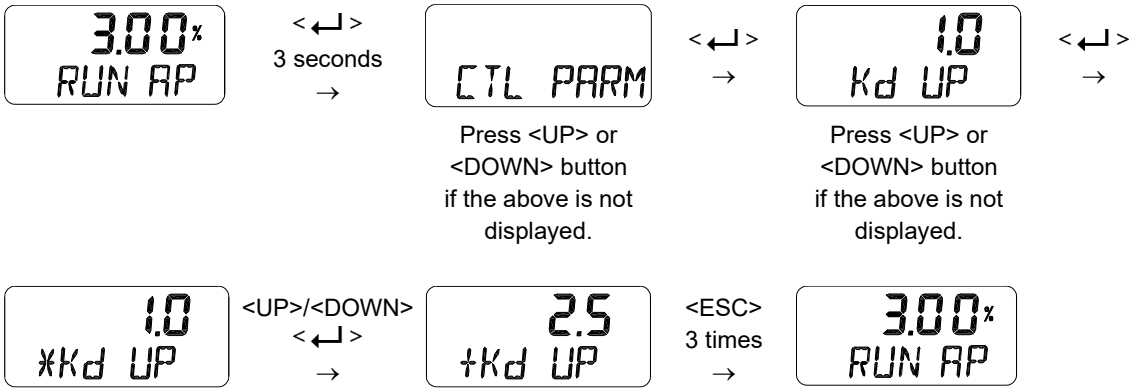

9.8.5 Auto Dead band Mode (AUTO db)

This function is used to suppress a hunting for valves with high static friction. The initial value is OFF and it shall be set to 0 % to activate the auto dead band automatically. The value is changed to a proper value once this mode is activated.

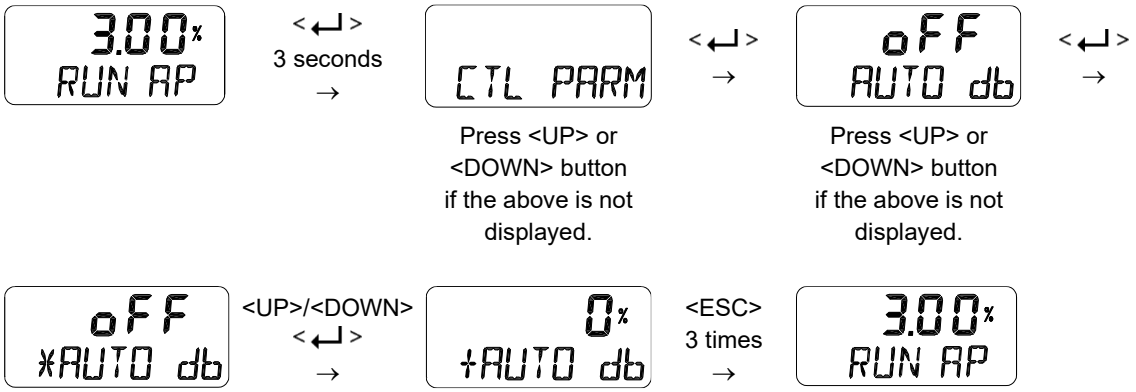

9.8.6 Performance Mode (PER)

This mode has three modes of operation: Stable, Normal, and Fast that allow you to select the required responsiveness. The performance modes indicate the response characteristics from slow response to quick response in the order of Stable, Normal and Fast.

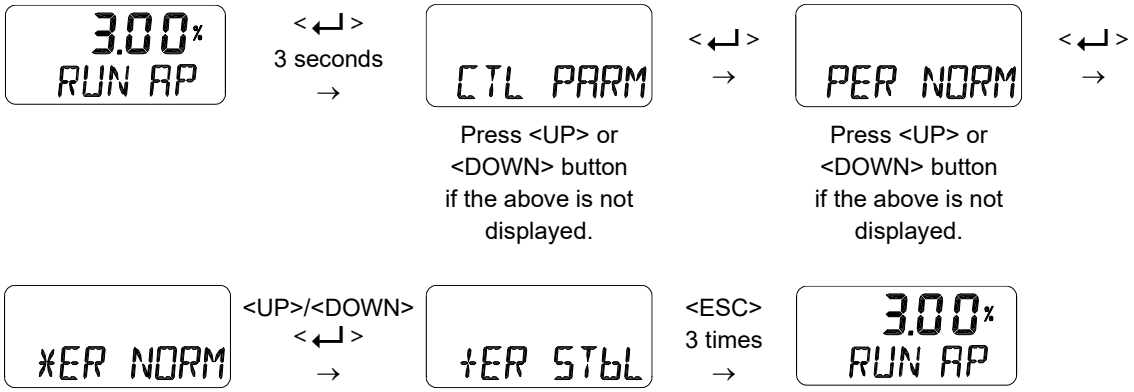

9.9 Input Configuration (IN CFG)

Followings are the values changeable at the Input Configuration Mode.

1) Signal Direction (SIG NORM / REVS)
2) Split Range Mode (SPLIT)
3) Custom Split Range Zero (CST ZERO)
4) Custom Split Range End (CST ENd)
5) Characterization Curves (CHAR)
6) User Set Characterization 5 Points (U5)
7) User Set Characterization 21 Points (U21)
8) Tight Shut Open (TSHUT OP)
9) Tight Shut Close (TSHUT CL)

9.9.1 Signal Direction (SIG NORM / REVS)

This function changes the action type of the valve, NORM or REVS. if NORM is selected, the air is completely released through output port 1 of the positioner when 4 mA is applied, and the maximum air pressure is loaded to the actuator through output port 1 when 20 mA is applied. If set to REVS, the maximum air pressure is loaded to the actuator via output port 1 when an input current of 4 mA is applied to the positioner.

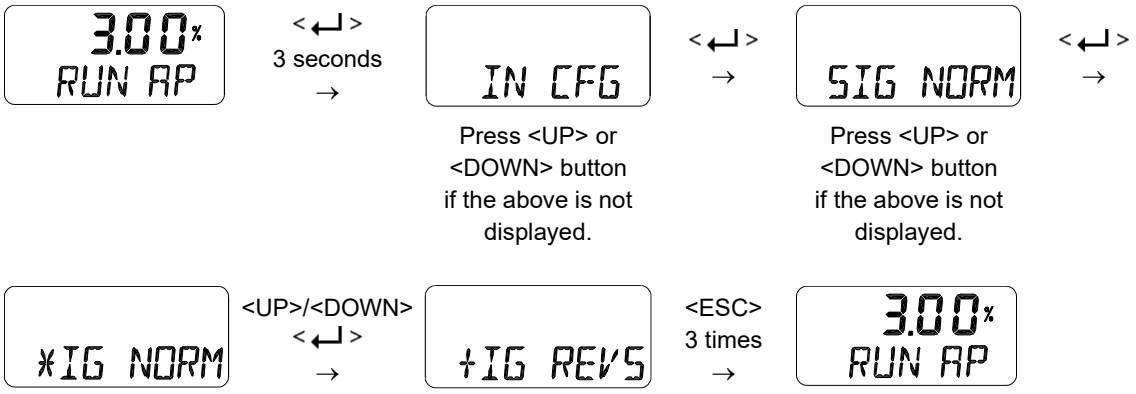

9.9.2 Split Range Mode (SPLIT)

This is used to set the range of the input signal to control the entire stroke of the valve. You can select one of the four input signals that consists of 4-20 mA, 4 to 12 mA, 12 to 20 mA, and user settings (Custom, CSt). 4-20 mA is the factory setting.

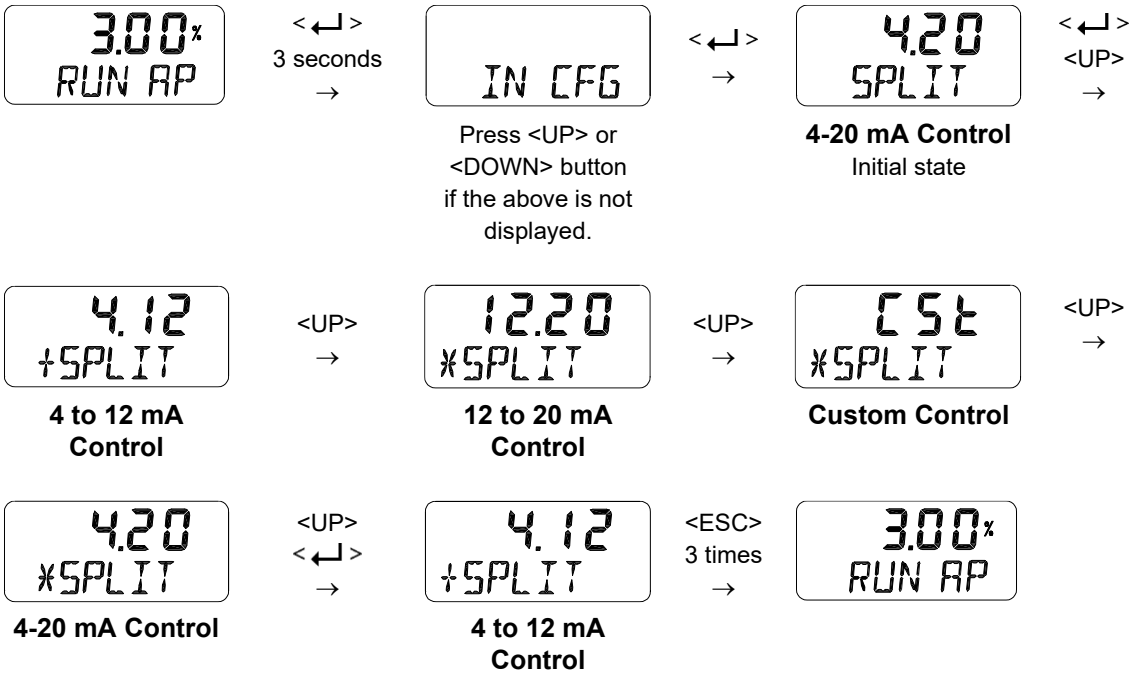

9.9.3 Custom Split Range Zero (CST ZERO)

It is used to set the current corresponding to the zeropoint when the valve position of 0 to 100 % is controlled by the user-set CUSTOM. For example, if the valve is controlled by 6 to 20 mA instead of 4-20 mA, CST ZERO is 6 mA. However, the difference of the current between the origin point and the endpoint must be greater than 4 mA.

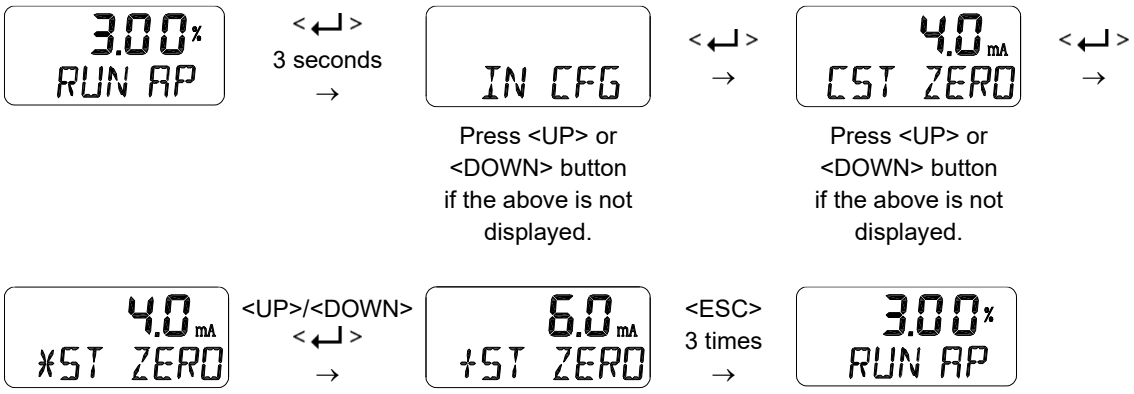

This function is activated by saving the Split Range Mode (SPLIT) of above Section 9.9.2 as “CSt”.

9.9.4 Custom Split Range End (CST ENd)

It is used to set the current corresponding to the endpoint when the valve position of 0 to 100 % is controlled by the user-set CUSTOM. For example, if the valve is controlled by 4 to 18 mA instead of 4-20 mA, CST ENd is 18 mA. However, the difference of the current between the origin point and the endpoint must be greater than 4 mA.

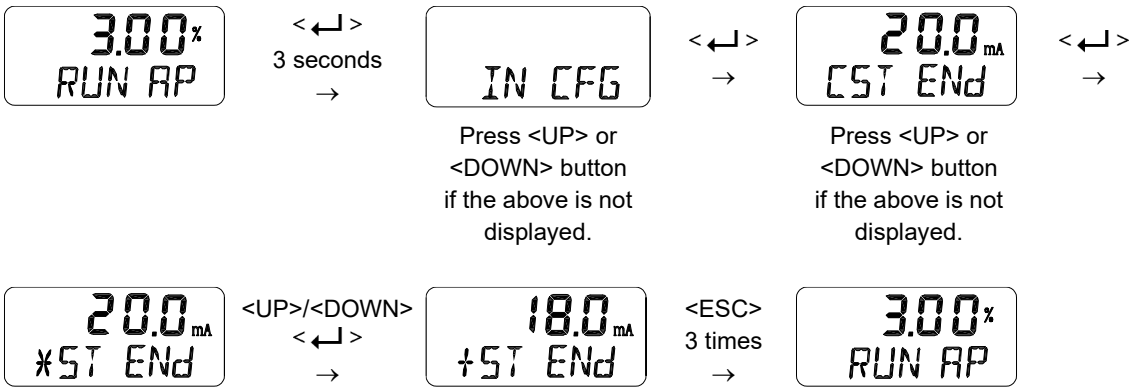

This function is activated by saving the Split Range Mode (SPLIT) of above Section 9.9.2 as “CSt”.

9.9.5 Valve Flow Characterization Curves (CHAR)

The flow characteristic curve of valve is available by selecting one of the following: Linear(LIN), Quick Open(QO), Equal Percentage(EQ), User Set Characterization 5 Points (U5) and User Set Characterization 21 Points(U21).

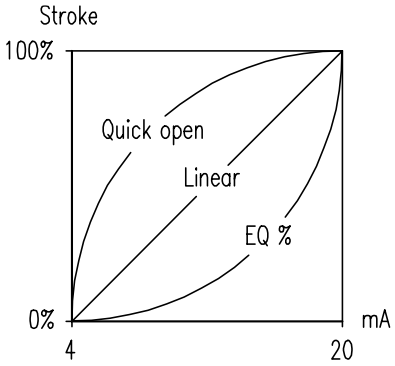

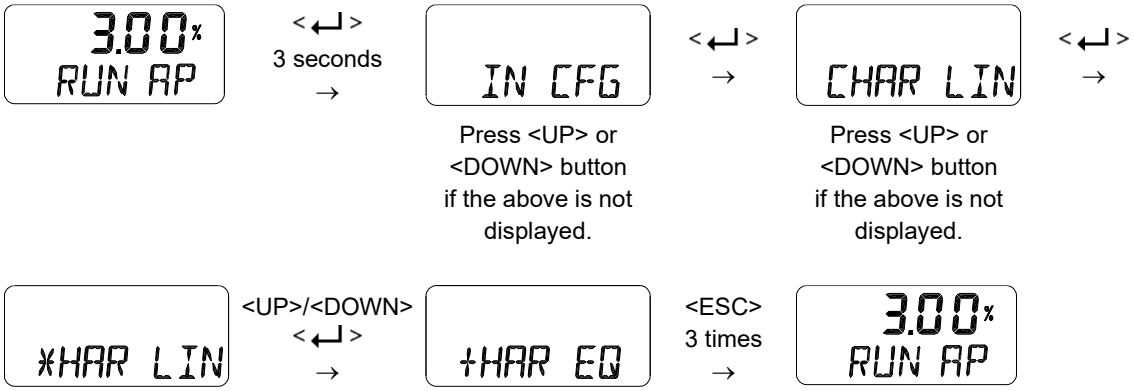

9.9.6 User Set Characterization 5 Points (U5)

A total of 5 target positions are set every 4 mA intervals. When shipped from the factory, the initial positions are P0 (4 mA, 0 %), P1 (8 mA, 25 %), P2 (12 mA, 50 %), P3 (16 mA, 75 %), and P4 (20 mA, 100 %). User can change all 5 points or only change partially and exit the menu by pressing <ESC> button.

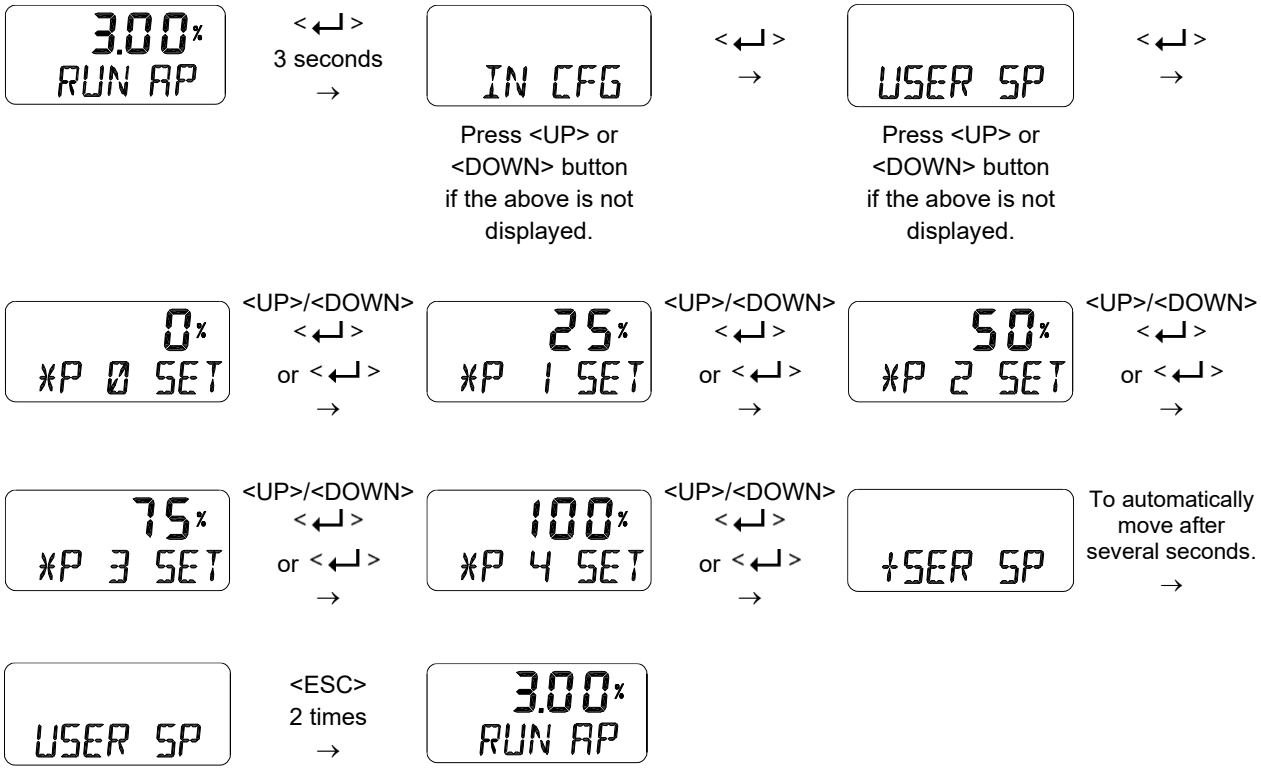

This function is activated by saving the Valve Flow Characterization Curves (CHAR) of above Section 9.9.5 as “U5”.

9.9.7 User Set Characterization 21 Points (U21)

A total of 21 target points can be set every 0.8 mA intervals. When shipped from the factory, the initial P0 (4 mA, 0 %), P1 (4.8 mA, 5 %), P2 (5.6 mA 10 %), - - -, P19 (19.2 mA, 95 %), and P20 (20 mA, 100 %). For example, a characteristic curve below can be made through the settings of P1 to P20. User can change all 21 points or only change partially and exit the menu by pressing <ESC> button.

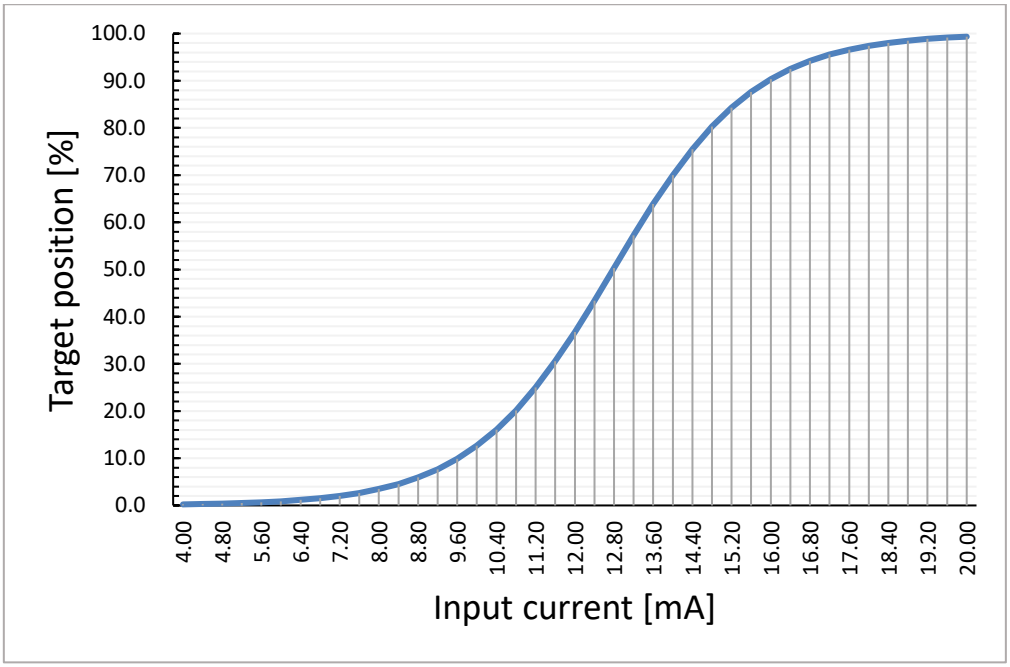

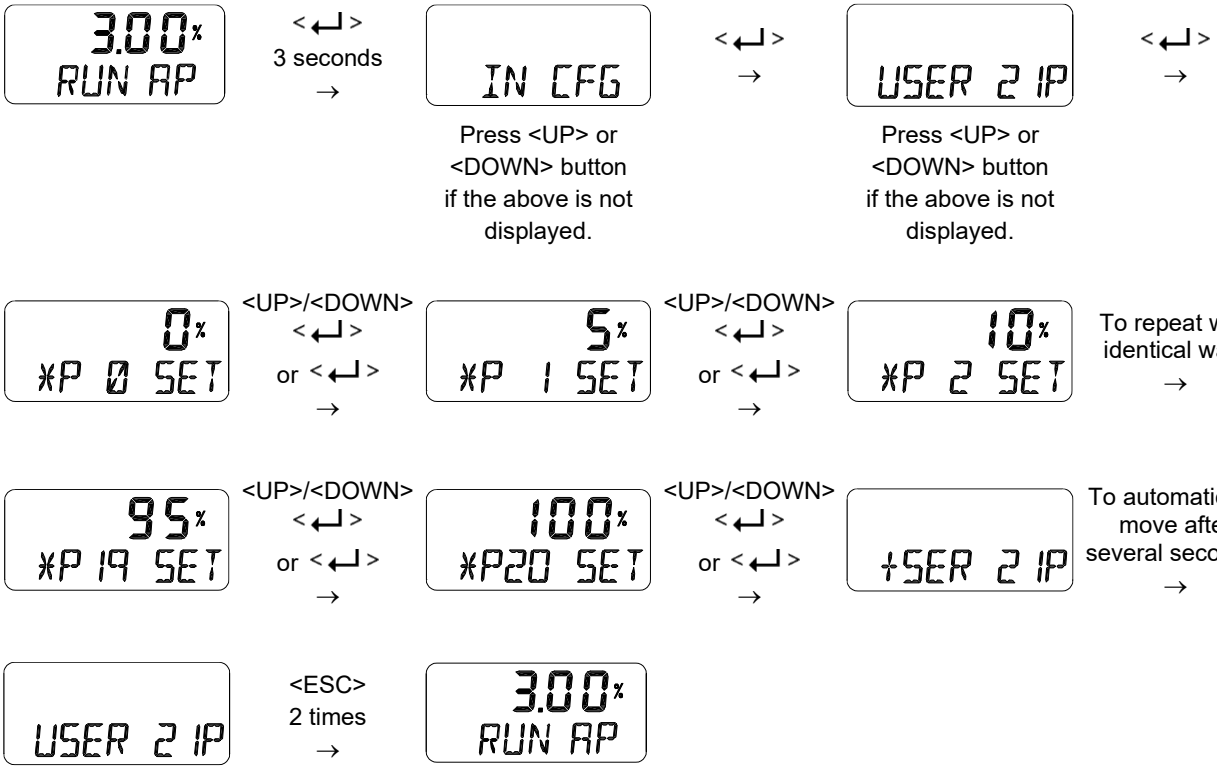

This function is activated by saving the Valve Flow Characterization Curves (CHAR) of above Section 9.9.5 as “U21”.

9.9.8 Tight Shut Open (TSHUT OP)

It is used to ensure that the valve is fully opened with a large force. When the input signal SP is greater than the value set in the TSHUT OP, all available force is applied to OUT 1 port to tightly open the valve. If the input current of 4 mA is 0 % of valve position and 20 mA is 100 % of valve position, and the Tight Shut Open value is set to any position less than 100 % (e.g. 95 %), then the valve stroke will be 100 % immediately when the input signal is over the set value (e.g. 95 %). A full supply pressure applied to the actuator via the OUT1 port prevents leakage of the valve by shutting the valve tightly. However, when the value is set to 100 %, Tight Shut Open function doesn't work.

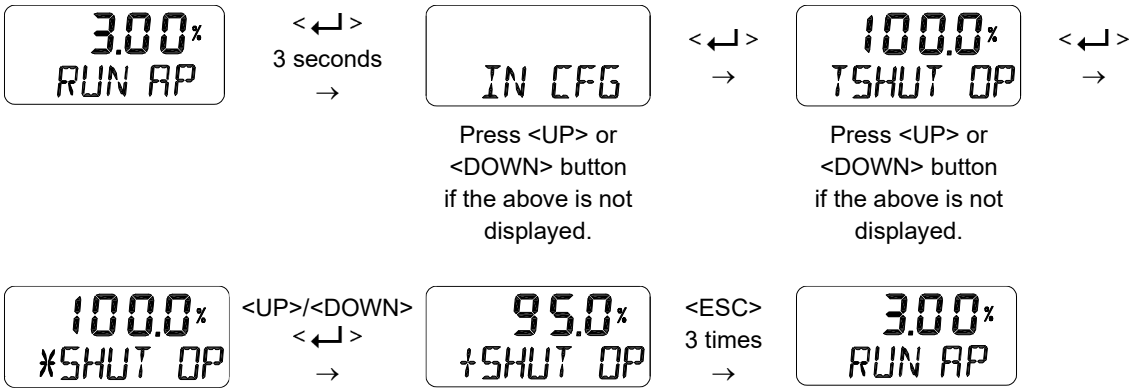

9.9.9 Tight Shut Close (TSHUT CL)

It is used to ensure that the valve is fully closed with a large force. When the input signal SP is smaller than the value set in the TSHUT CL, air pressure is vented through OUT 1 port to tightly close the valve. If the input current of 4 mA is 0 % of valve position and 20 mA is 100 % of valve position, and the Tight Shut Close value is set to any position larger than 0 % (e.g. 5 %), then the valve stroke will be 0 % immediately when the input signal goes below the set value (e.g. 5 %). The air venting from the actuator via the OUT1 port prevents leakage of the valve by shutting the valve tightly. However, when the value is set to 0 %, Tight Shut Close function doesn't work.

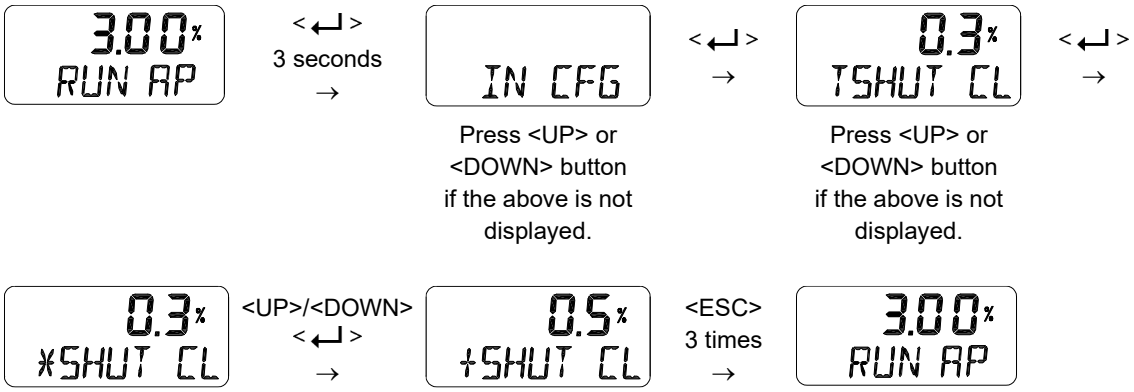

The following graph shows the operation of the valve stroke when the input signal corresponding to Tight Shut Open or Tight Shut Close is applied to the device.

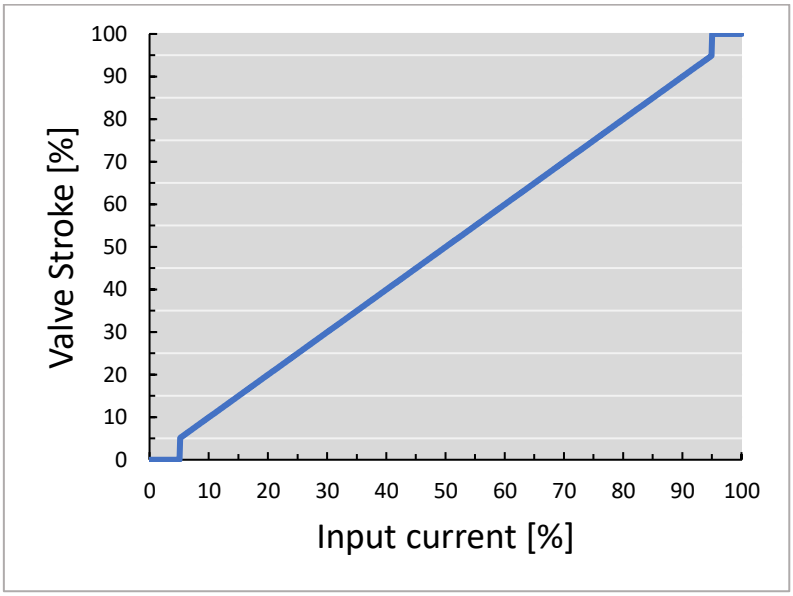

9.10 Output Configuration (OUT CFG)

Followings are the values changeable at the Output Configuration Mode.

1) 4-20 mA Analog Output Direction (PTM NORM / REVS)
2) 4-20 mA Analog Output Zero / End (PTM ZERO / ENd)
3) Back Calculation (bACKCAL oFF / on)

9.10.1 4-20 mA Analog Output Direction (PTM NORM / REVS)

The 4-20 mA analog output signal from the positioner can be changed to normal (NORM) or reverse (REVS), which means they are the same or reversed direction as the actual position.

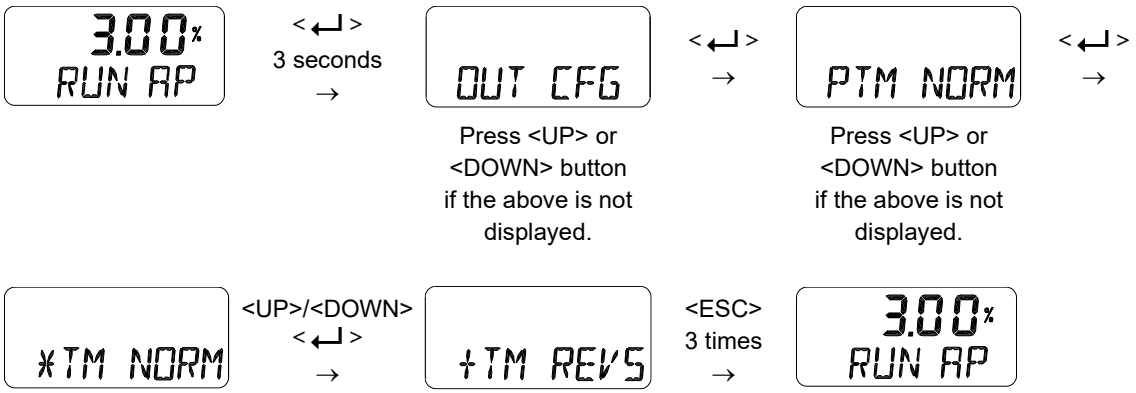

9.10.2 4-20 mA Analog Output Zero / End (PTM ZERO / ENd)

Analog Output ZERO is capable of changing the output current at the origin (4 mA output) of the position transducer, and Analog Output End is a function to change the output current at the final point (20 mA output). This is used when the analog output signal needs to be feedbacked differently than the actual position of the valve, or to be adjusted a little. A measuring instrument such as an ampere meter is needed to view the analog output signal, and it should be connected as shown below.

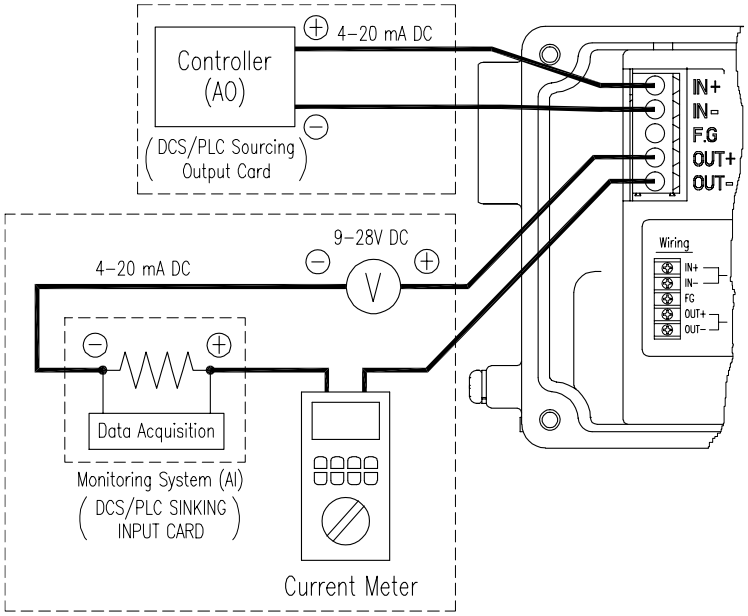

Fig. 9-3: Setting 4-20 mA Analog Output

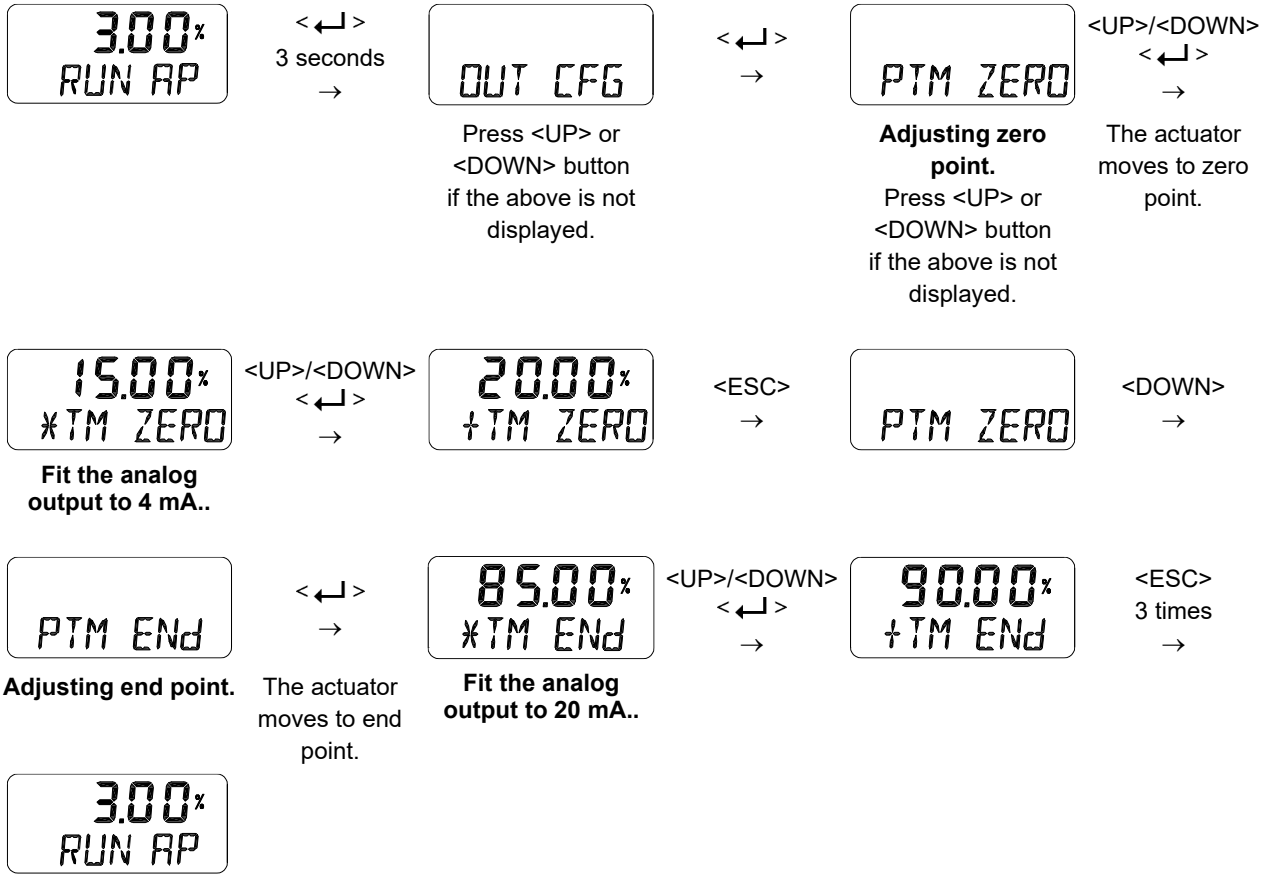

9.10.3 Back Calculation (bACKCAL oFF / on)

This function recalculates the output "RUN AP" value changed by the flow characteristics setting mode to display it linearly proportional to actual input current. For example, if the flow characteristic mode is set from "LIN" to "EQ", when an input current value of 8 mA (25 %) is applied, the target position is changed to 6.25 % and "RUN AP" is displayed as 6.25 % after the move. If you change the bACKCAL from OFF to ON, the "RUN AP" is displayed as 25 %.

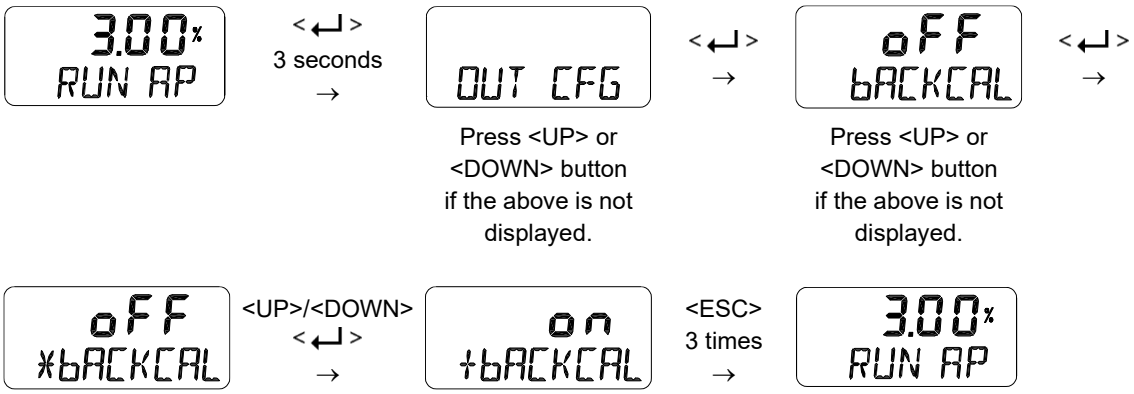

9.11 Device Configuration (dEV CFG)

Followings are the values changeable at the dEV CFG Mode.

1) Action Setting (ACT REVS / dIR)
2) Linear Interpolation (ITP oFF / on)
3) Lock of Parameters (Write Protect, W UNLOCK / LOCK)
4) Actual Position View Mode (View Mode, VI NORM / REVS)
5) Factory Reset (dEFAULT oFF / on)
6) Positioner Self-Test (SELFTEST)

9.11.1 Action Setting (ACT REVS / dIR)

Reverse Action (REVS) or Direct Action (dIR) are automatically set by performing “AUTO 2” within the Auto Calibration function. However, this function is used when the user requires to change ACT REVS or ACT dIR to other action. Changing the action from Reverse Action (REVS) to Direct Action (dIR) or Direct Action (dIR) to Reverse Action (REVS) will also change the Signal Direction (SIG), Position Transmitter Direction (PTM) and View Mode (VI).

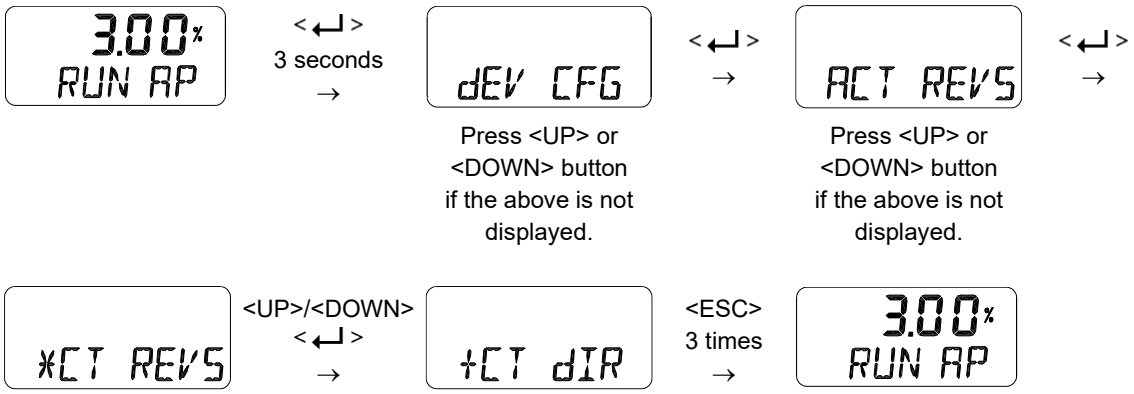

9.11.2 Linear Interpolation (ITP oFF / on)

ITP is used to compensate the linear motion of the actuator into rotary motion of the feedback lever. Following Auto Calibration, the ITP mode is set automatically to “on” when the angle range of the feedback lever is greater than 20 °, but it is set to oFF when this angle is less than 20 ° or rotary positioner is used.

The settings below are the process of manually changing the “ITP oFF” to the “ITP on”.

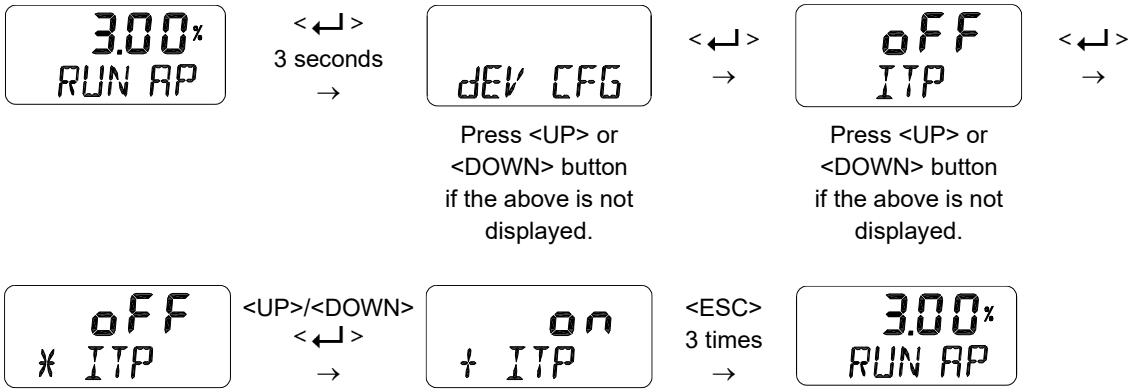

9.11.3 Lock of Parameters (Write Protect, W UNLOCK / LOCK)

This function is used to set (LOCK) or disable (UNLOCK) the lock for the parameters. Used to prevent the stored parameters from being changed.

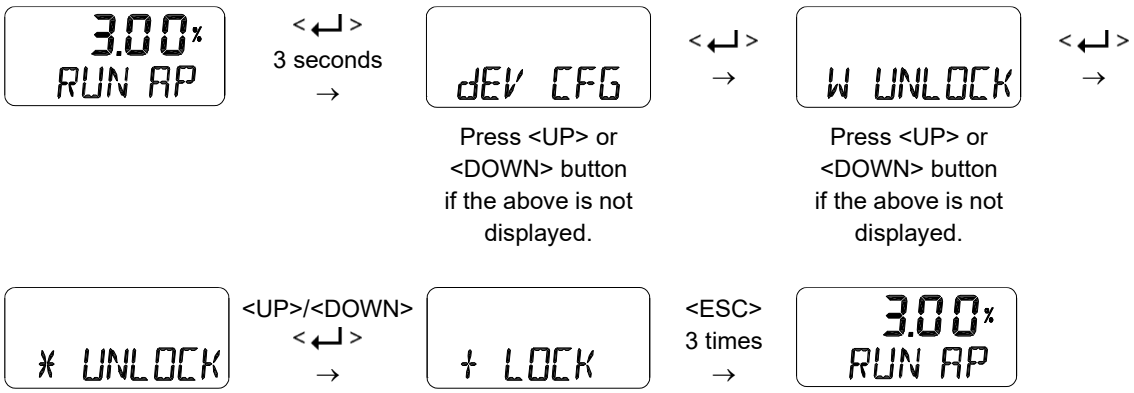

9.11.4 Actual Position View Mode (View Mode, VI NORM / REVS)

This function is used to set the "RUN AP" value on the LCD to be displayed as direct (NORM) or reversely (REVS) as the actual position of the valve.

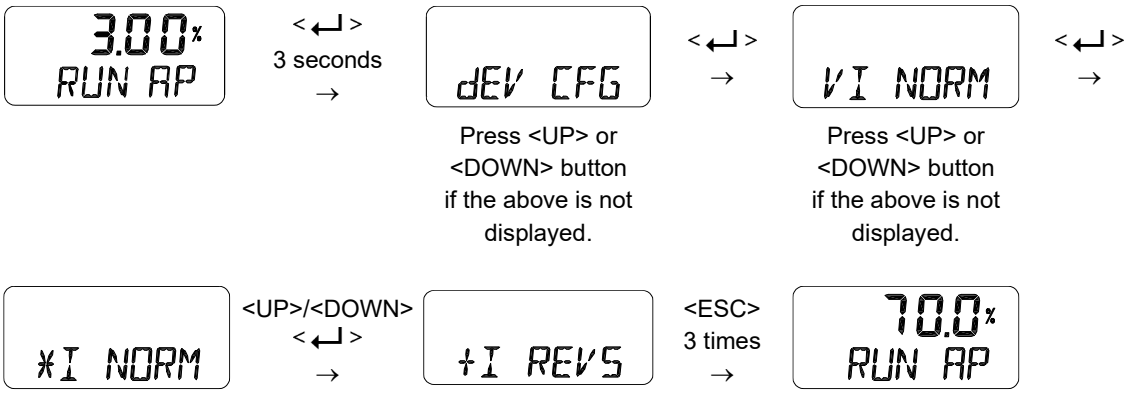

9.11.5 Factory Reset (dEFAULT oFF / on)

This function initializes all parameters stored in the positioner to initial factory setting. In the dEFAULT mode, press the Enter button to enables ON/OFF setting and then pressing Enter button for approximately 3 seconds changes the dEFAULT mode from oFF to “on". Additional pressing of Enter button resets all parameters to initial factory state.

Pay attention when using this mode as all the parameter values will be changed to the factory settings.

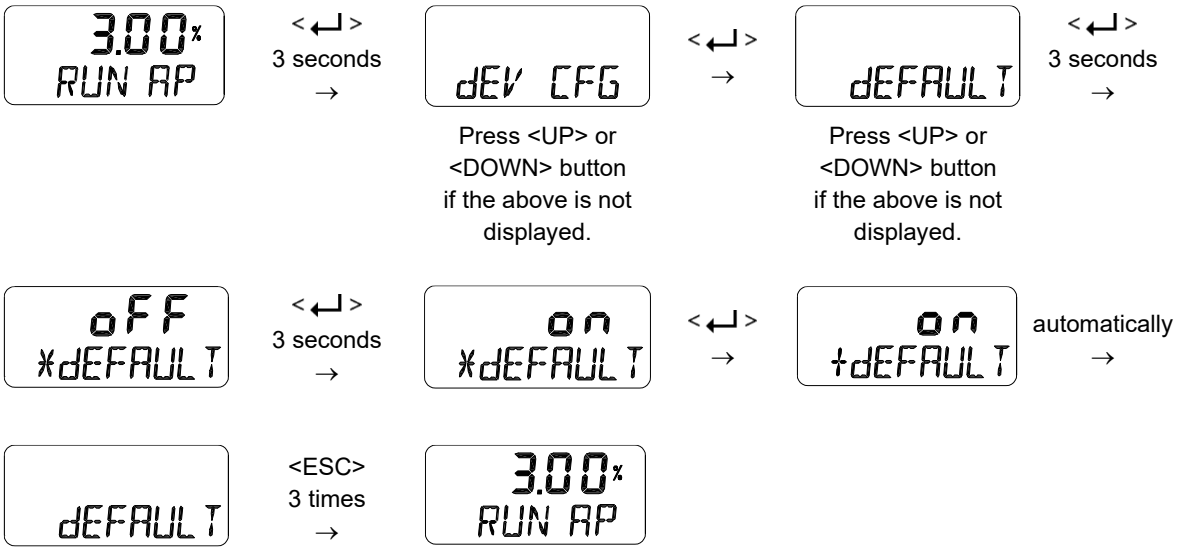

9.11.6 Positioner Self-Test (SELFTEST)

This function is used to diagnose the operation of the memory (RAM or NVM) inside the positioner. If no error is found during SELFTEST, the SELFTEST menu is displayed after FINISH is displayed, and if abnormalities are detected, the message "SEt / NVMW" is displayed.

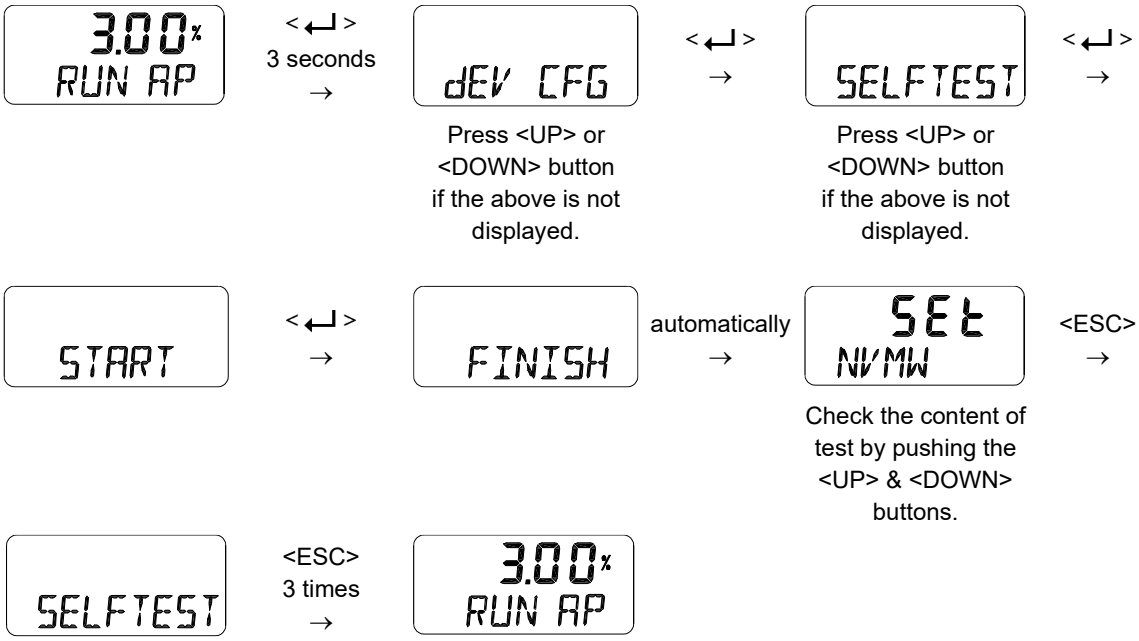

Diagnostic message



If the abbreviation displayed at the top line is “Set”, it means the event has been created, and if it is “CLr”, the message has been cleared. NVMW at the bottom is an alarm message that has occurred. See "9.15 Status and Alarm Code" for alarm details.

9.12 Diagnosis Mode (dIAGNd)

Followings are the values changeable at the dIAGNO Mode.

1) Default Alarm Settings
2) Device Status (dS)
3) Reset Alarm Status (RST ALRM)
4) View Event Log (EVT LOG)

9.12.1 Default Alarm Settings

The table below shows the default settings for the positioner status. They are enable to automatically generate an alarm when particular event occurs and each state or alarm is set to be one of Failure, Out of Specification, Maintenance Required, Function Check according to the classification of NE107 signal. So the corresponding NE107 signal is displayed especially when particular alarm occurs. As shown in the table below, the status / alarms that can be manually reset are Auto Calibration Running, Diagnosis Running, Critical NVM Fail, Non-Critical NVM Fail and Auto Calibration Fail.

Status / Alarm	Default setting	Default NE107 signal	Resettable manually when alarm occurred?
Local Operation Active	Enable	Check Function	No
Auto Calibration Running	Enable	Check Function	Yes
Position Sensor High Limit	Enable	Out of Specification	No
Position Sensor Low Limit	Enable	Out of Specification	No
Critical NVM Fail	Enable	Failure	Yes
Non Critical NVM Fail	Enable	Failure	Yes
Deviation Timeout	Enable	Out of Specification	No
Temperature Sensor Fail	Enable	Failure	No
Position Sensor Fail	Enable	Failure	No
Abnormal Drive Signal	Enable	Out of Specification	No
Travel Cutoff High Limit	Enable	Out of Specification	No
Travel Cutoff Low Limit	Enable	Out of Specification	No
Auto Calibration Fail	Enable	Maintenance Required	Yes
Stack Overflow	Enable	Failure	No
Loop Current High Limit	Enable	Out of Specification	No
Loop Current Low Limit	Enable	Failure	No

9.12.2 Device Status (dS)

The status of the current devices is indicated as GOOd, NE107 symbol, and abbreviation for alarm.

NE107 symbols	Abbreviation	Function
None	PS GOOd	Good
	PS FAIL	Failure
	PS FUNC	Functional Check
	PS OUTS	Out of Specification
	PS MNTR	Maintenance Required

Alarms generated by each process are assigned to one of the four NE107 signals at initial factory settings and can be used by reassigning the already preset signals as required. See 9.15 Status and Alarm Code for the details of each alarm.



9.12.3 Reset Alarm Status (RST ALRM oFF / on)

The alarm is automatically released when the cause of the alarm is removed. For example, if a high-temperature alarm is created, the alarm is automatically released when internal temperature drops below the Temperature High Limit. However, if the Partial Stroke Test fails or Auto Calibration fails, use this function to release the alarm.

Below is an alarm list that can be released using the RST ALRM function.

1) Auto Calibration Running
2) Diagnosis Running
3) Critical NVM Fail
4) Non-Critical NVM Fail
5) PST Fail
6) Auto Calibration Fail

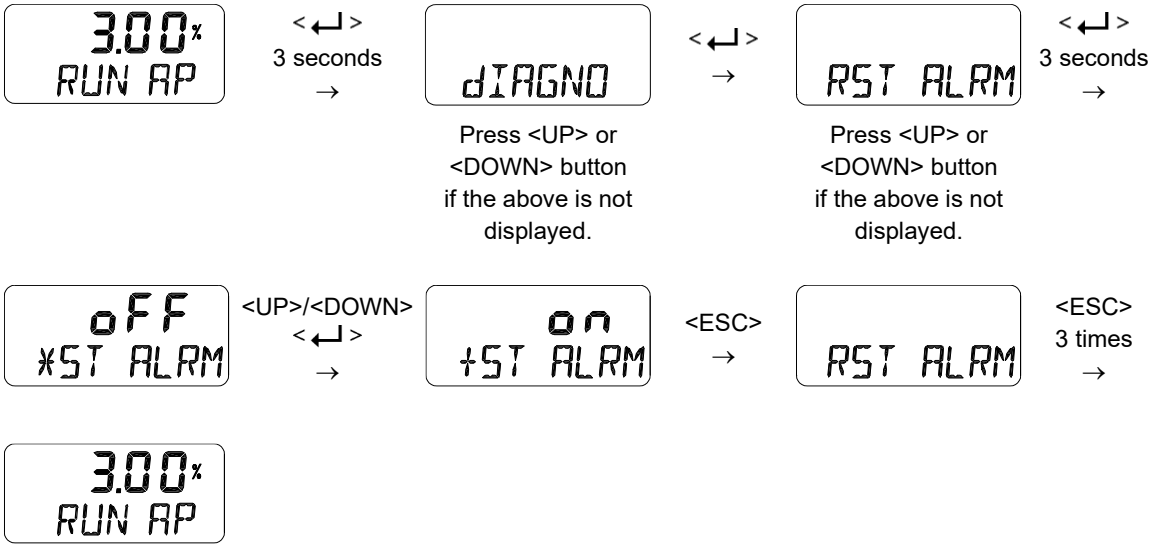

9.12.4 View Event Log (EVT LOG)

This is used to show the 20 most recent events that occurred in operation. Record 0 is the most recent of the 20 events and Record 19 is the oldest event. The event detail shows the time when the event occurred (EVT TIME) as well as the content of the event (EVT INFO). See 9.15 Status and Alarm Codes for an abbreviation and description of the event details.

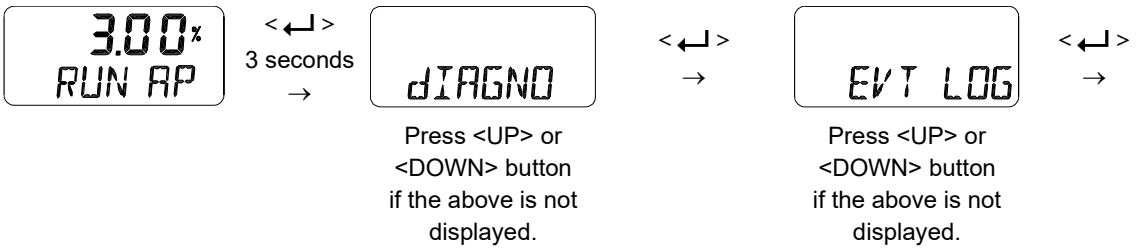

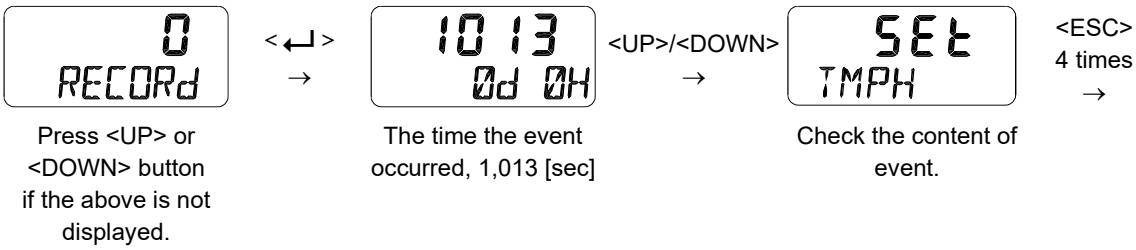



Event Message Description



The “SEt on the upper section of screen shows that a specific event has occurred, while the “CLr” means that the event has been removed. The “TMPH” displayed on the bottom section indicates an abbreviation for the alarm.

9.13 Position information (INFO)

The diverse Positioner information is provided in the INFO Mode.

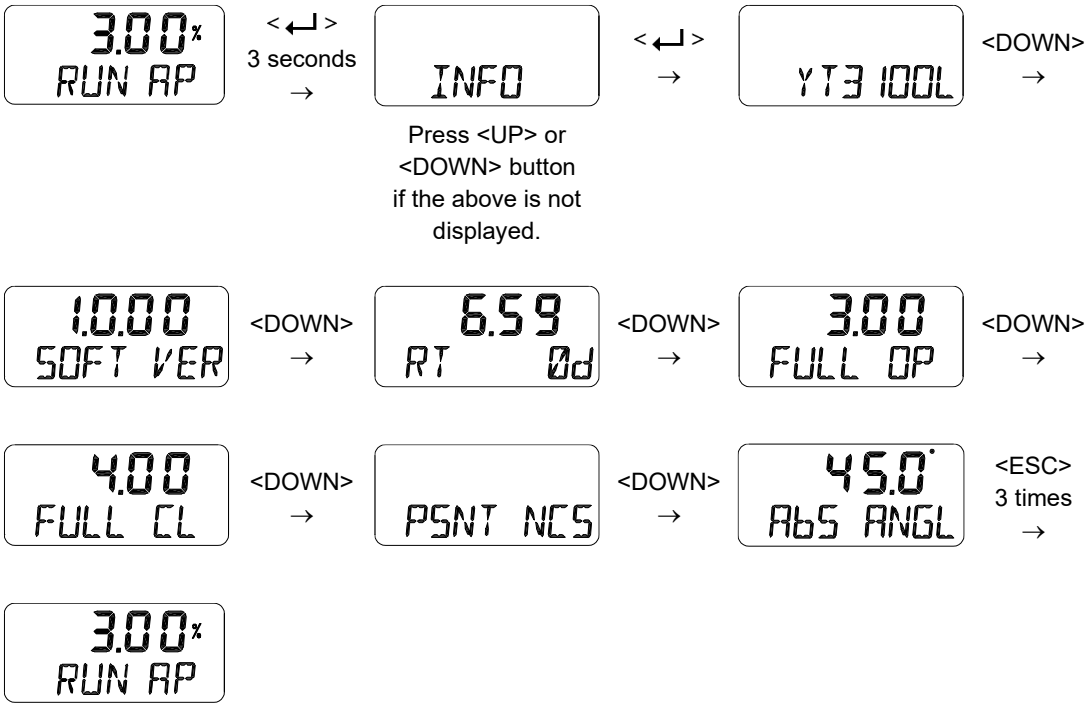

LCD display	Description
YT3100L	Model Name
1.0.00 **SOFT VER** **/** **2020DC21**	Software Version [SOFT VER] “1.0.00” Software Input date : “2020-12(DC)-31” (January JA, February FB, March MR, April AR, May MY, June JN, July JL, August AG, September SP, October OT, November NV, December DC) At SOFT VER status if <↵> button is pressed, the date will be displayed and then if <↵> button is pressed again, SOFT VER is displayed again.
4.18 **RT 0d**	Run Time [RT] Total usage time of the product Upper “4.18” indicates 4 hours and 18 minutes. Lower “0d” indicates days used. Interval to store time is one hour.
3.12 **FULL OP**	Upward Full Stroke Time [FULL OP] This value is stored automatically after executing AUTO 2 / 3 calibration, and indicates the time in seconds it takes for the valve to fully open from fully closed.
2.97 **FULL CL**	Downward Full Stroke Time [FULL CL] This value is stored automatically after executing AUTO 2 / 3 calibration, and indicates the time in seconds it takes for the valve to fully closed from fully open.
PSNT NCS	Position Sensor Type [PSNT] Potentiometer [PTN] Non-Contact Sensor [NCS]
AbS ANGL	Absolute Position in Angle [ABS ANGL].

9.14 Error codes during automatic calibration

There may be an error during the automatic calibration in case of irregularity.

- Error code : indicated if the positioner is out of control, malfunctions or becomes imprecise.
- When the error is detected, auto calibration is aborted and message is indicated immediately on LCD display.

Error code		Error content and cause	Action
CHK AIR	-7	• Indicated when the valve is not moving in “Full Open” direction during auto calibration.	• Check if pneumatic pressure is being supplied normally to the positioner.
	-9	• Indicated when the valve is not moving in “Full Close” direction during auto calibration.	
	-12	• Indicated when oscillation happens in steady state during SCAN 1 phase of auto calibration.	• Check for leakage from output port of the positioner and related to piping line.
CHK IP	-10	• Indicated when there is no response in torque motor.	• Please contact your point of purchase or Rotork YTC.
CHK LINK	-8	• Indicated when the movable range of the Feedback lever is too narrow(below 10°).	• Linear : Check if the feedback lever is properly installed. Move and re-install the positioner to stem of actuator in order to make the angle use of the feedback lever larger than current use angle. • Rotary: Check if the main shaft of the positioner is properly installed. In the case of Namur, the horizontal straight part of the main shaft of the positioner must be well inserted into the slotted groove of the actuator stem.

9.15 Status and Alarm Code

The status and alarm codes can be displayed on the LCD screen as required. Refer to the table below to check the status and alarm codes, and then take the appropriate action.
(See 9.5 Configuration and Operation)

Alarm Code	Abbreviation	Status / Alarm name	Description or proposed actions
0	LOPA	Local Operating Active	It indicates the positioner is being operated by manual operation.
1	CALR	Auto Calibration Running	It is active when auto-calibration is in progress.
2	DIGR	Diagnostics Running	It is active when diagnosis test such as Step Response Test, Stroke Time Test, and Trace Test is in progress.
4	PSNH	Position Sensor Hi Limit	Position sensor is out of range. Check the installed state if it happened during operation.
5	PSNL	Position Sensor Lo Limit	
6	NVMF	Critical NVM Defect	It is active if there is a failure associated with NVM (Nonvolatile Memory). Initialize the positioner using Default function and then AUTO 2 calibration. If it is repeated, replace the electronics board by contacting the manufacturer or manufacturer's representative.
7	NVMW	Non-Critical NVM Defect	
15	dVTO	Deviation Time Out	The deviation between the target location and the actual location has been out of 5% for more than 60 seconds. The above 5% and 60 seconds cannot be changed and are fixed values. Check for problems such as friction of the valve/actuator, leakage of pneumatic pressure, lack of supply pressure, etc.
18	PSNF	Position Sensor Defect	It is active if there is a problem with the position feedback sensor inside the positioner. If it is repeated, replace the electronics board by contacting the manufacturer or manufacturer's representative.
19	ABdS	Abnormal Drive Signal	It is active if there is a problem with I/P converter. If it is repeated, replace the electronics board by contacting the manufacturer or manufacturer's representative.
23	TVCH	Travel Cutoff Hi Limit	It is active when the travel exceeds the available high stroke of the valve/actuator. The available stroke is already set during auto calibration. The event is not created when Tight Shut Open is used. Aging of the valve / actuator assembly or problem in the positioner sensor.

Alarm Code	Abbreviation	Status / Alarm name	Description or proposed actions
24	TVCL	Travel Cutoff Lo Limit	It is active when the travel is below the available low stroke of the valve/actuator. The available stroke is already set during auto calibration process. The event is not created when Tight Shut Close is used. Aging of the valve / actuator assembly or problem in the positioner sensor.
29	CALF	Auto Calibration Failure	It is active when auto-calibration has failed. Retry auto-calibration after checking if there is no problem with installed state such pneumatic leaks, lever position and others.
32	STAK	Stack Overflow	Replace the electronics board by contacting the manufacturer or manufacturer's representative.
36	LPCH	Loop Current Hi Limit	It is active if the input current exceeds 20.5 mA.
37	LPCL	Loop Current Lo Limit	It is active if the input current falls below 3.8 mA.
-	OVER CUR	Over Current	The input current exceeds 24mA.

10 Main Software Map

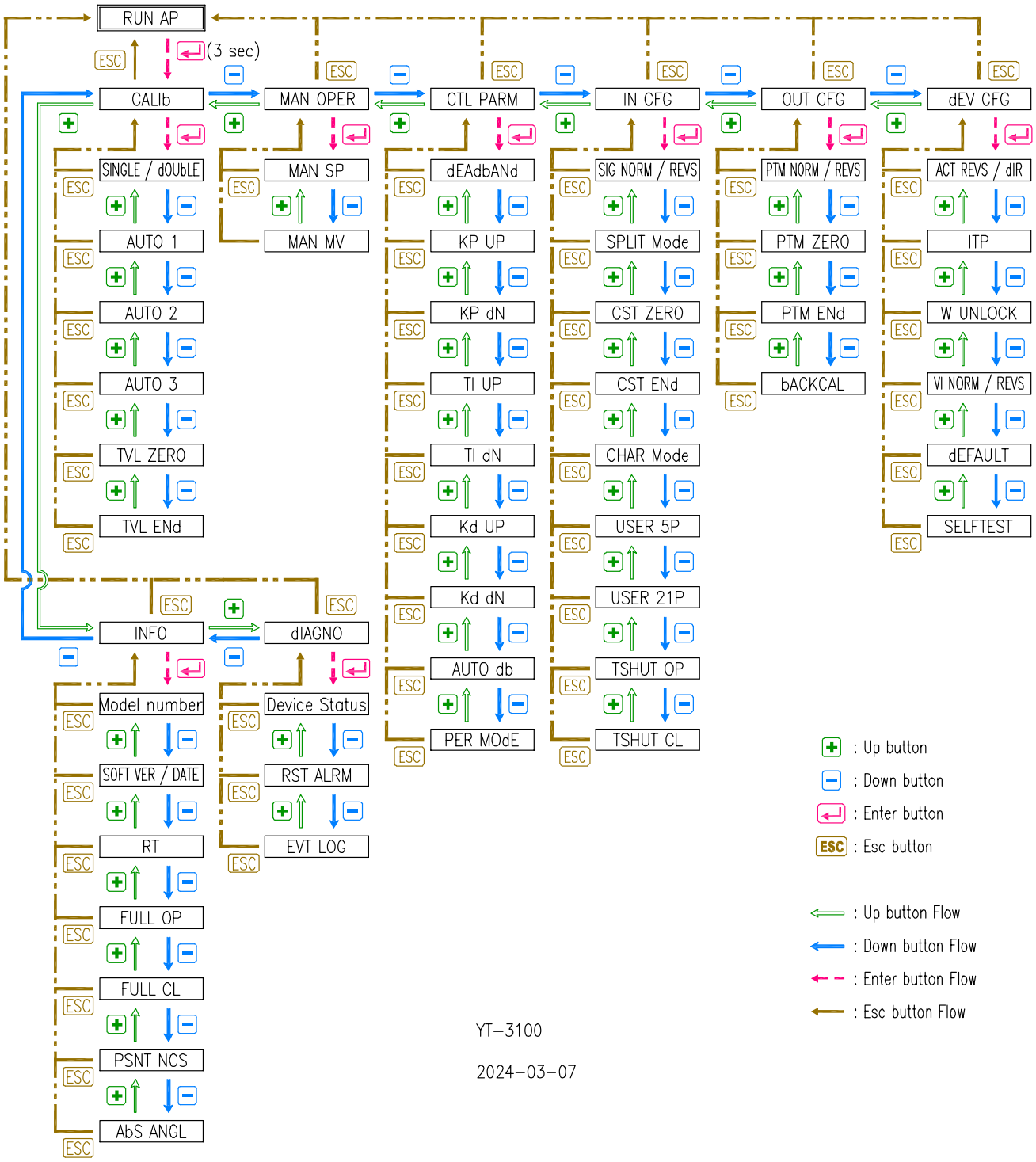

rotork®

Contact us now

mail@rotork.com
www.rotork.com

PUB126-136-00
Issue 06/26