rotork®

Keeping the World Flowing
for Future Generations

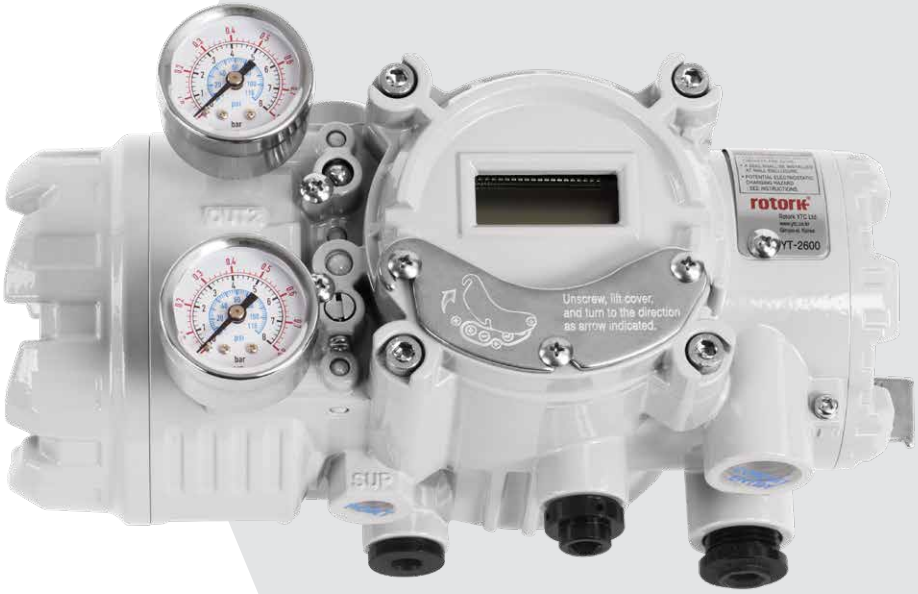

YT-2600 Series

Smart Positioner

Product manual

Contents

1 Introduction 5
1.1 General Information for the users 5
1.2 Manufacturer Warranty 5
1.3 Explosion Proof Warning & Specific Conditions of Use 6
2 Product Description 7
2.1 General 7
2.2 Main Features and Functions 7
2.3 Label Description 8
2.4 Product Code 10
2.5 Product Specification 11
2.6 Certifications 12
2.7 Parts and Assembly 13
2.8 Product Dimension 14
3 Installation 15
3.1 Safety 15
3.2 Tools for installation 15
3.3 Linear positioner Installation 16
3.3.1 Safety 16
3.3.2 Linear positioner Installation Steps 17
3.4 Rotary positioner Installation 20
3.4.1 Components 20
3.4.2 Rotary Bracket Information 21
3.4.3 Rotary positioner Installation Steps 22
4 Connection - Air 24
4.1 Safety 24
4.2 Supply Pressure Condition 24
4.3 Piping Condition 24
4.4 Connection – Piping with actuator 25
4.4.1 Single acting actuator 25
4.4.2 Double acting actuator 25
5 Connection – Power 26
5.1 Safety 26
5.2 Terminal overview 27
5.2.1 Input Signal Terminal 28
5.2.2 Analog Output Terminal 29
5.2.3 Limit Switch Terminal 29
5.2.4 Ground 30
6 Adjustments 31
6.1 Limit Switch Adjustment 31

6.2 Variable Orifice Adjustment 32
7 Maintenance 33
7.1 Supply air 33
7.2 Seals 33
8 Auto Calibration and Operation 34
8.1 Warning 34
8.2 LCD display and buttons 34
8.2.1 LCD display and symbols 34
8.2.2 Button and function 35
8.3 Menu levels 36
8.4 Run Mode (RUN) 37
8.5 Configuration and Operation 38
8.6 Calibration (CALIb) 41
8.6.1 Acting Type (SINGLE / dOUBLE) 42
8.6.2 Auto Calibration 1 (AUTO 1) 42
8.6.3 Auto Calibration 2 (AUTO 2) 43
8.6.4 Travel Zero (TVL ZERO) and Travel end (TVL ENd) 44
8.7 Manual Operation (MAN OPER) 45
8.7.1 Manual Operation by Manipulator Value (MAN MV) 45
8.8 Control Parameters (CTL PARM) 46
8.8.1 Dead Band (dEAdbANd) 46
8.8.2 Forward P parameter (KP UP) and reverse P parameter (KP dN) 47
8.8.3 Forward Integral time parameter (KI UP) and reverse Integral time parameter (KI dN) 47
8.8.4 Forward D parameter (Kd UP) and reverse D parameter (Kd dN) 48
8.8.5 GAP Parameter (GAP) 48
8.8.6 GAP P parameter (GP) 49
8.8.7 GAP I parameter (GI) 49
8.8.8 GAP D parameter (Gd) 49
8.8.9 Piezo open time to minimum movement , Upward [PT UP] and Downward [PT dN] 50
8.8.10 Error rate to speed reduction zone, Upward [ESR UP] and Downward [ESR DN] 50
8.8.11 Auto Dead band Mode (AUTO db) 51
8.9 Input Configuration (IN CFG) 52
8.9.1 Signal Direction (SIG NORM / REVS) 52
8.9.2 Split Range Mode (SPLIT) 53
8.9.3 Custom Split Range Zero (CST ZERO) 53
8.9.4 Custom Split Range End (CST ENd) 54
8.9.5 Valve Flow Characterization Curves (CHAR) 54
8.9.6 User Set Characterization 5 Points (U5) 55
8.9.7 User Set Characterization 21 Points (U21) 56
8.9.8 Tight Shut Open (TSHUT OP) 57

8.9.9 Tight Shut Close (TSHUT CL) 58
8.10 Output Configuration (OUT CFG) 59
8.10.1 4-20 mA Analog Output Direction (PTM NORM / REVS) 59
8.10.2 4-20 mA Analog Output Zero / End (PTM ZERO / ENd) 60
8.10.3 HART Feedback Direction (HT NORM / REVS) 61
8.10.4 Back Calculation (bACKCAL oFF / on) 62
8.10.5 Analog Output Function [AOF oFF / …] 62
8.10.6 Analog Output Logic [AO LOGIC Lo / HI] 63
8.11 Device Configuration (dEV CFG) 64
8.11.1 Action Setting (ACT REVS / dIR) 64
8.11.2 Linear Interpolation (ITP oFF / on) 65
8.11.3 Lock of Parameters (Write Protect, W UNLOCK / LOCK) 65
8.11.4 Actual Position View Mode (View Mode, VI NORM / REVS) 66
8.11.5 Polling address setting (POL AddR) 66
8.11.6 Factory Reset (dEFAULT oFF / on) 67
8.11.7 Positioner Self-Test (SELFTEST) 68
8.12 Diagnosis Mode (dIAGNd) 69
8.12.1 Default Alarm Settings 69
8.12.2 View Monitoring Counts (VI CNTS) 70
8.12.3 Diagnostic Limit Configuration (LIMT CFG) 71
8.12.4 Reset Alarm Status (RST ALRM oFF / on) 72
8.12.5 View Event Log (EVT LOG) 73
8.13 Position information (INFO) 74
8.14 Error codes during automatic calibration 76
8.15 Status and Alarm Code 77
10 Main Software Map 79

1 Introduction

1.1 General Information for the users

Thank you for purchasing Rotork YTC Limited products. Each product has been fully inspected after its production to offer you the highest quality and reliable performance. Please read the product manual carefully prior to installing and commissioning the product.

- Installation, commissioning, and maintenance of the product may only be performed by trained specialist personnel who have been authorized by the plant operator accordingly.
- The manual should be provided to the end-user.
- The manual can be altered or revised without any prior notice. Any changes in product's specification, design, and/or any components may not be printed immediately but until the following revision of the manual.
- When the manual refers to **"Valve Zero / Zero"** means the final valve position upon pneumatic pressure has been fully exhausted from positioner's OUT1 port. For example, the valve zero position may differ between linear direct and reverse actions. (DA/RA)
- The manual should not be duplicated or reproduced for any purpose without prior approval from Rotork YTC Limited, Gimpo-si, South Korea.
- In case of any other problems that are not stated in this manual, please make immediate contact to Rotork YTC Limited.
- Positioner is an accessory of the control valve, so please make sure to read the applicable instruction manual of the control valve prior to installation and operation.

1.2 Manufacturer Warranty

- For the safety, it is important to follow the instructions in the manual. Manufacturer will not be responsible for any damages caused by user's negligence.
- Any modifications or repairs to the product may only be performed if expressed in this manual. Injuries and physical damages caused by customer's modifying or repairing the product without a prior consultation with Rotork YTC Limited will not be compensated. If any alterations or modifications are necessary, please contact Rotork YTC Limited directly.
- The warranty period for the product is (12) months from the date of shipment unless otherwise stated. Customers can extend the warranty period by an additional (12) months by registering the product's serial number or lot number, customer information, and installation address on the warranty extension application site Product Registration (https://www.rotork.com/en/service/product-registration).
- Manufacturer warranty will not cover products that have been subjected to abuse, accidents, alterations, modifications, tampering, negligence, misuse, faulty installation, lack of reasonable care, repair or service in any way that is not contemplated in the documentation for the product, or if the model or serial number has been altered, tampered with, defaced or removed; damages that occurs in shipment, due to act of God, failure due to power surge, or cosmetic damage. Improper or incorrectly performed maintenance will void this limited warranty.

- In case of Fail Freeze product, it keeps the position of current valve in case of input current signal and pneumatic failure. However, please do not leave it in that state for a long time and take immediate action to restore the system. There is no fault in the positioner, but it is often reported that the valve is out of position due to an unexpected leak in the pipe or actuator.
- For detailed warranty information, please contact the corresponding local Rotork YTC Limited office or main office in South Korea.

1.3 Explosion Proof Warning & Specific Conditions of Use

Please ensure the unit is being used and installed in explosion proof certified environment.

- The positioners are Explosion proof construction for internal pressure.
- For detail information, refer to “2.6 Certifications”
- Explosion proof type of cables and gaskets should be used, when explosion gases are present at the installation site.
- Keep cover tight while circuits are alive.
- Power should be turned off completely when opening product’s cover. When opening the cover, ensure that there is no power remaining in any electrical parts nearby.
- The positioners have 2 ports for power connection. Explosion proof type wires and packing should be used. Blind plug is required when any port is not being used.
- Ring terminal with surface area of more than 1.25 mm2 with M4 spring washer should be used to connect the power.
- For external ground terminal, ring terminal with surface area of more than 5.5 mm2 should be used.
- There is risk of explosion due to electro-static charge. Static electricity charge may develop when cleaning the product with a dry cloth. It is imperative to avoid static electricity charge in the hazardous environment. If cleaning the surface of the product is needed, must use wet clothes.
- Seal required within 50 mm of enclosure.
- Consult the manufacturer for dimensional information on the flameproof joint for repair.
- To maintain IP66 rating, when installing threaded conduit, use type PTFE tape according to instructions.
- Special conditions for safe use of sign “X” of ATEX / IECEx:

  The ambient temperature range is from -30 °C to +70 °C for temperature class T6(T85 °C) or -30 °C to +80 °C for temperature class T5(T100 °C).

  Hazardous area with carbon disulfide shall be excluded.

2 Product Description

2.1 General

The smart positioner accurately controls valve stroke in response to an input signal of 4-20 mA from the controller. Built-in micro-processor optimizes the positioner's performance and provides unique functions such as **Auto-Calibration, PD Control, and HART Protocol Communications.**

2.2 Main Features and Functions

- When Input signal or supply pressure fails, Positioner keeps the current position of the valve stroke without any additional device. (Fail Freeze option)
- The LCD can be checked and the buttons can be operated without opening the cover which allows use of various functions of the positioner such as parameter adjustment in explosive gas atmosphere.
- User will easily understand the method of using 4 buttons because it work same in all mode of firmware interfaces.
- Positioner operates normally even there are sudden changes in supply pressure and / or high vibration environment.
- The method of Auto Calibration is very simple.
- As an advantage of having very low air consumption, It could greatly reduce operating costs in large-scale plants.
- It is compatible with most of controllers.
- Variable orifice can be used even to minimize the hunting occurrence and optimize operating conditions.
- Various information about positioner can be processed by HART communication (option)
- Valve system becomes more stable by using 4-20 mA analog output function (option).
- Different valve characteristics can be adjusted – Linear, Quick Open, Equal Percentage, and User Set which user can make 5 or 18 points characterizations.
- Tight Shut – Close and Shut - Open can be set.
- PD parameters can be adjusted in the field without any additional communicator.
- Split range 4 to 12 mA or 12 to 20 mA can be set.
- Operating temperature for positioners is -30 to 80 °C (Please check certified explosion proof temperature)
- Hand calibration function can set Zero point or End point manually.
- It has IP66 protection grade. (excluding the pressure gauges)
- Polyester powder coating resists the corrosion process.
- Maintenance of the positioner is easy because of modularized inner structure.

2.3 Label Description

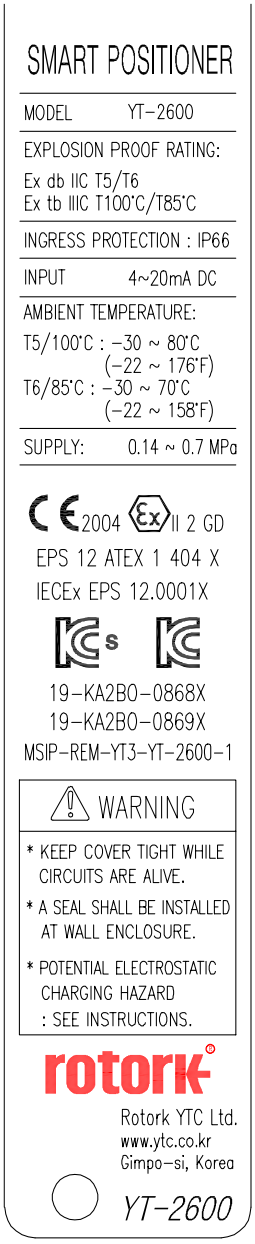

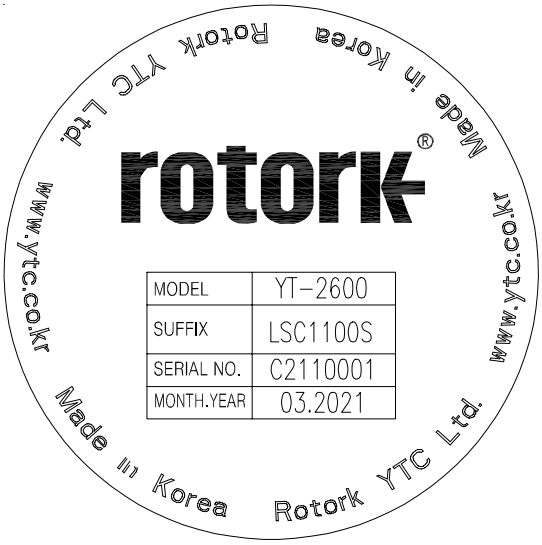

Fig. L-1: Sticker Label

- MODEL : Indicates the model number of the positioner.
- SUFFIX : Indicates any options.
- SERIAL NO. : Indicates unique serial number.
- MONTH.YEAR : Indicates manufactured month and year

Fig. L-2: Stainless steel plate Label (ATEX, IECEx, KCs)

- MODEL: Indicates the model number of the positioner.
- EXPLOSION PROOF RATING: Indicates certified explosion proof grade
- INGRESS PROTECTION : Indicates enclosure protection grade.
- INPUT : Indicates input signal range.
- AMBIENT TEMP.: Indicates the allowable ambient temperature.
- SUPPLY: Indicates the supply pressure range.

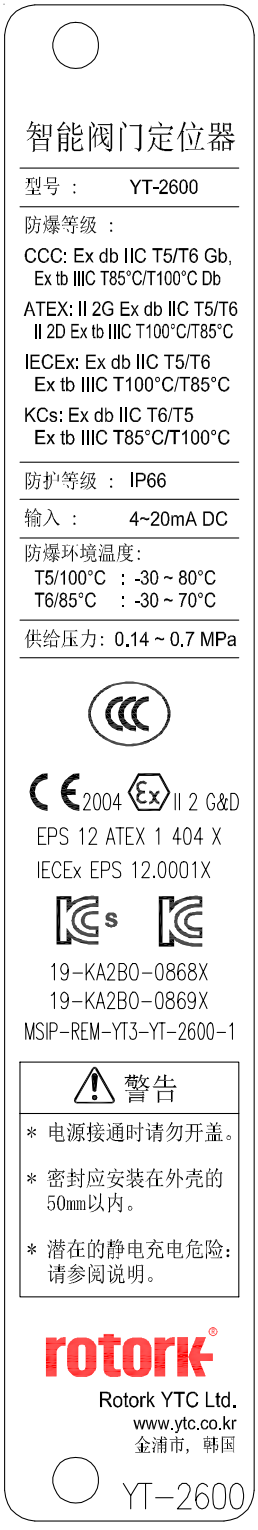



Fig. L-4: CCC label

2.4 Product Code

2.4.1 YT-2600 series follows suffix symbols as follows.

YT-2600 [1] [2] [3] [4] [5] [6] [7] [8]

[1]	Motion Type		L : Linear R : Rotary
[2]	Acting type		S : Single D : Double
[3]	Explosion Protection		C : ATEX, IECEx, KCs Z : CCC
[4]	Lever Type	Linear	1 : 10 to 40 mm 2 : 20 to 70 mm 3 : 50 to 100 mm 4 : 100 to 150 mm
		Rotary	1 : M6 x 34L 2 : M6 x 63L 3 : M8 x 34L 4 : M8 x 63L 5 : Namur
[5]	Conduit - Air Connection Type		1 : G 1/2 – Rc 1/4 (N/A for CCC) 2 : G 1/2 – 1/4 NPT (N/A for CCC) 3 : G 1/2 – G 1/4 (N/A for CCC) 4 : M20x1.5P – 1/4 NPT 5 : 1/2 NPT – 1/4 NPT
[6]	Communication		0 : None 2 : HART Communication
[7]	Option		0 : None 1 : 4-20 mA Analog Output 2 : Limit Switch(2ea) [1)] 3 : 4-20 mA Analog Output and Limit Switch(2ea) [2)]
[8]	Fail Option		F : Fail Freeze S : Fail Safe

[1)] [2)] Limit switch: DC 24 V (50 mA) and transistor type

2.5 Product Specification

Model		**YT-2600**	
Housing Material		Aluminum	
Motion Type		Linear	Rotary
Acting Type		Single / Double	
Input Signal		4-20 mA DC	
Minimum Current Signal		3.5 mA(Standard) or 3.8 mA(HART Included)	
Supply Pressure		0.14 to 0.7 MPa (1.4 to 7 bar)	
Stroke		10 to 150 mm	55 to 110°
Impedance		Max. 450 Ω @ 20 mA DC	
Conduit Entry		G 1/2 (N/A for CCC) or 1/2 NPT or M20x1.5P	
Air Connection		Rc 1/4 or G 1/4 or 1/4 NPT	
Gauge Connection		1/8 NPT	
Ingress Protection		IP66 (excluding the pressure gauges)	
Explosion Protection)		Flameproof enclosure. Refer to “2.6 Certifications”	
Operating Temperature		-30 to 80 °C (-22 to 176 °F)	
Ambient Temperature Of Explosion proof	**T5**	-30 to 80 °C (-22 to 176 °F)	
	T6	-30 to 70 °C (-22 to 158 °F)	
Linearity		± 0.5 % F.S.	
Hysteresis		± 0.5 % F.S.	
Sensitivity		± 0.2 % F.S.	
Repeatability		± 0.3 % F.S.	
Flow Capacity	**Fail Freeze**	60 LPM (Sup. = 0.14 MPa)	
	Fail Safe	40 LPM (Sup. = 0.14 MPa)	
Air Consumption	**Fail Freeze**	0.01 LPM (Sup. = 0.14 MPa)	
	Fail Safe	0.06 LPM (Sup. = 0.14 MPa)	
Output Characteristic		Linear, Quick Open, EQ%, User Set	
Vibration		No Resonance up to 100 Hz @ 6 G	
Humidity		5 to 95 % RH @ 40 °C	
Communication (Option)		HART Communication (HART 7)	
Analog Output (Option)		4-20 mA (DC 9 to 28 V)	
Weight		3.0 kg (6.61 lb)	
Painting		Polyester Powder Coating	

⚠ Tested under ambient temperature of 20 °C, absolute pressure of 760 mmHg, and humidity of 65 %.
Please contact Rotork YTC Limited for detailed testing specification.

2.6 Certifications

※ All certifications below are posted on Rotork YTC Limited homepage (https://www.rotork.com/ytc).

- **KCs (Korea)**

  Type : Explosion proof construction for internal pressure

  1. Rating : Ex d IIC T6/T5
     Certification No. : 19-KA2BO-0868X
  2. Rating : Ex tb IIIC T85°C/T100°C
     Certification No. : 19-KA2BO-0869X

  Ambient temperature : -30 to +70°C(T6), -30 to +85°C(T5)

- **ATEX**

  Type : Explosion proof construction for internal pressure
  Rating : II 2G Ex db IIC T5/T6, II 2D Ex tb IIIC T85°C/T100°C
  Certification No. : EPS 12 ATEX 1 404 X
  Ambient temperature : -30 to +70°C T6(T85°C), -30 to +80°C T5(T100°C)

- **IECEx**

  Type : Explosion proof construction for internal pressure
  Rating : Ex db IIC T5/T6, Ex tb IIIC T85°C/T100°C
  Certification No. : IECEx EPS 12.0001X
  Ambient temperature : -30 to +70°C T6(T85°C), -30 to +80°C T5(T100°C)

- **CCC (China)**

  Type : Explosion proof construction for internal pressure
  Rating : Ex db IIC T5/T6 Gb, Ex tb IIIC T85°C/T100°C Db
  Certification No. : 2020322307000619
  Ambient temperature : -30 to +70°C T6(T85°C), -30 to +80°C T5(T100°C)

- **Electromagnetic Compatibility (EMC)**

  - EMC directive 2014/30/EC from April 2016
  - EC Directive for CE conformity marking

2.7 Parts and Assembly

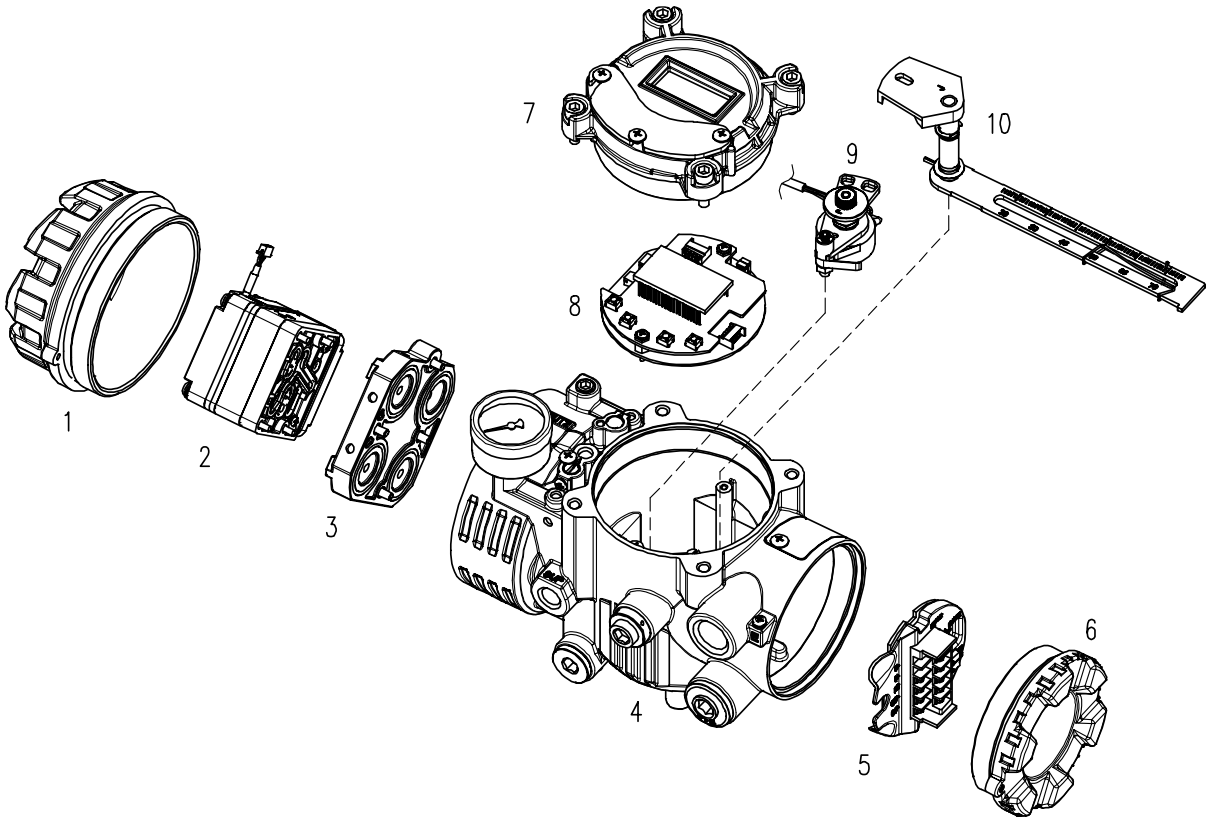

Fig. 2-1: Exploded view

1. Pilot cover
2. Pilot unit
3. Pilot block
4. Main body
5. Terminal PCB
6. Terminal Cover
7. Main Cover
8. Main PCB
9. Potentiometer
10. Feedback Lever

2.8 Product Dimension

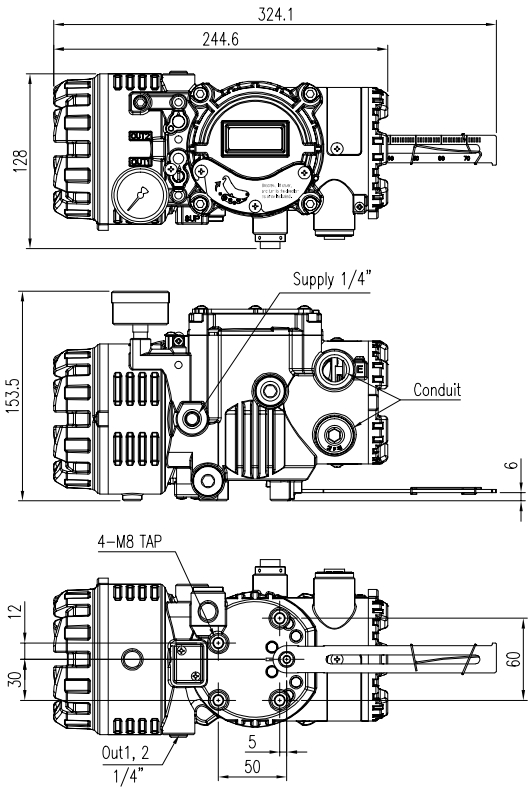

Fig. 2-2: YT-2600L (Linear type)

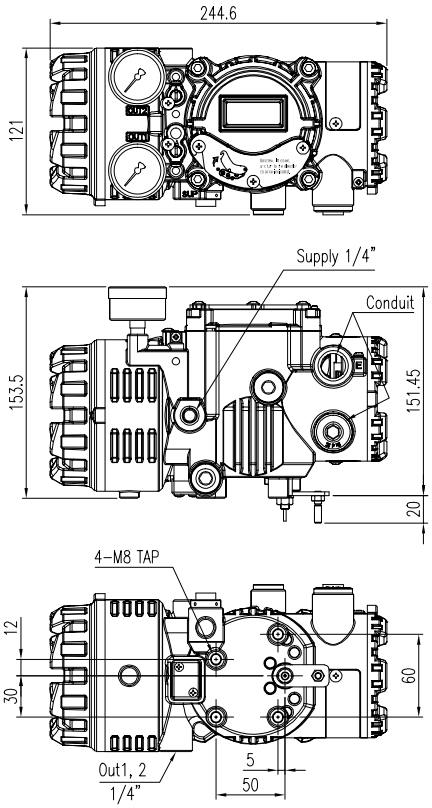

Fig. 2-3: YT-2600R (Rotary, Fork lever type)

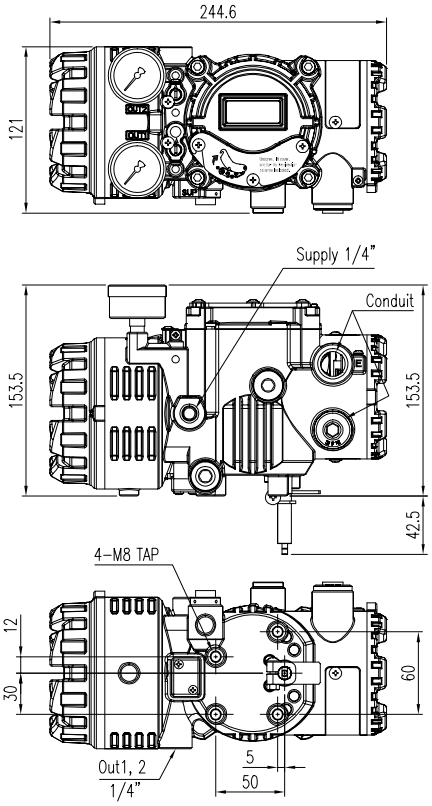

Fig. 2-4: YT-2600R (Rotary, Namur type)

3 Installation

3.1 Safety

When installing a positioner, please ensure to read and follow safety instructions.

- Any input or supply pressures to valve, actuator, and / or to other related devices must be turned off.
- Use bypass valve or other supportive equipment to avoid entire system “shut down”.
- Ensure there is no remaining pressure in the actuator.
- YT-2600 series have two drain ports to be used for internal condensation. Please use larger drain plug for the condensation and block other remaining port with blind plug.

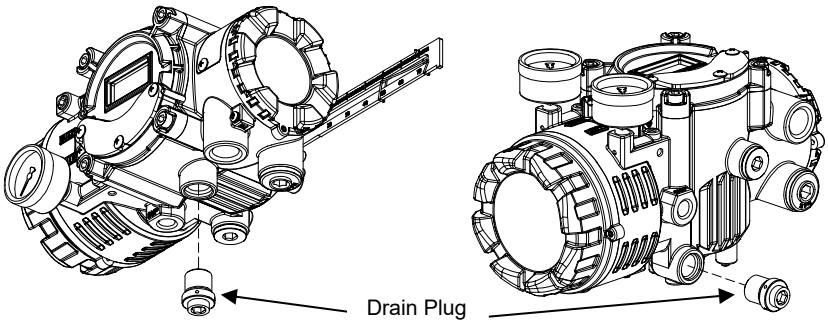

Fig. 3-1: Location of drain plug according to orientation of positioner’s mounting

- After assembling the drain plug at the correct hole, make sure the positioner must be installed as shown below. Otherwise, the condensation water could cause damages to PCB.

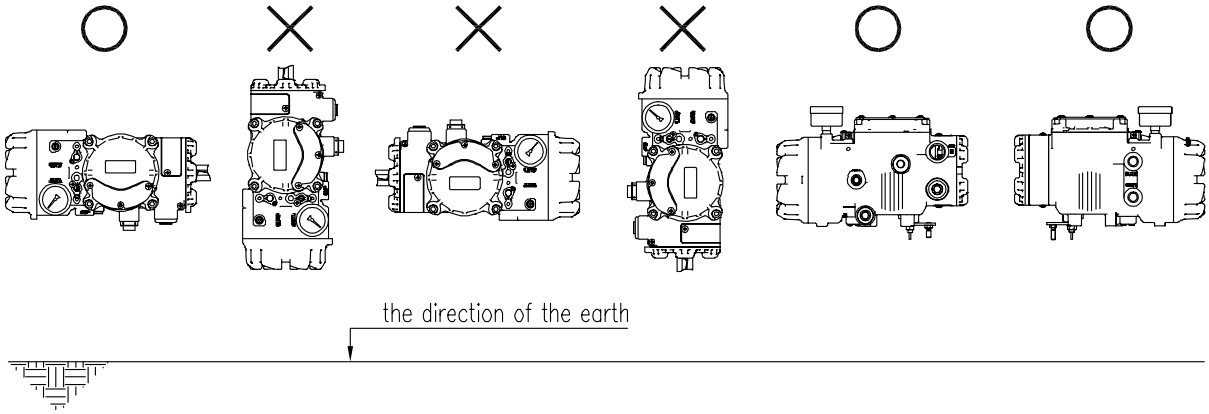

Fig. 3-2: The correct positions of a vent cover

3.2 Tools for installation

- Hex key set for hex socket cap bolts
- (+) & (-) Screw drivers
- Spanners for hexagonal-head bolts

3.3 Linear positioner Installation

Linear positioner should be installed on linear motion valves such as globe or gate type which uses spring return type diaphragm or piston actuators.

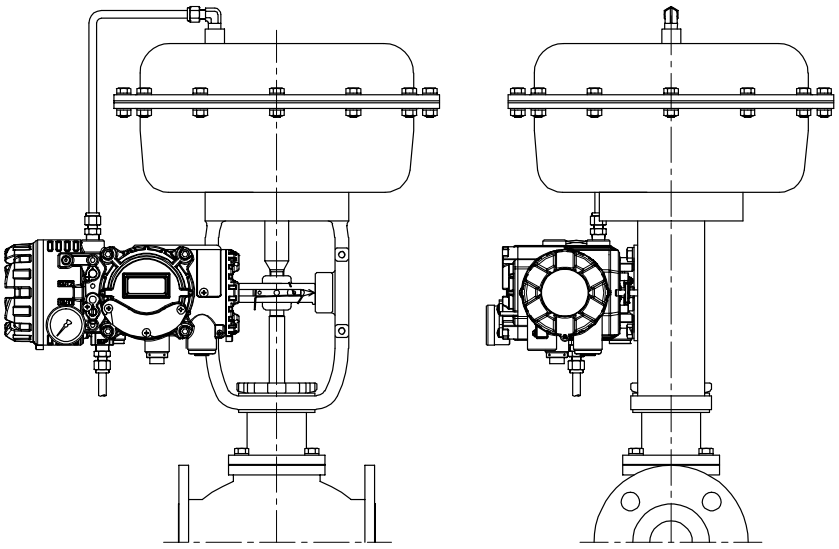

Fig. 3-3: Installation example

Before proceeding with the installation, ensure following components are available.

- Positioner
- Feedback lever and lever spring
- M6 nut and spring washer (fastening feedback lever to a main shaft)
- Bracket, bolts and washers for positioner – not supplied with the positioner
- Connection bar – not supplied with the positioner

3.3.1 Safety

Proper bracket must be made in order to adapt the positioner on the actuator yoke.
Please consider following important points when a bracket is being designed.

- Positioner's feedback lever must be vertical to the valve stem at 50 % of the valve stroke.
- The connection bar of the actuator clamp for the feedback lever should be installed in such a way that the valve stroke length coincides with the corresponding figure in "mm" marked on the feedback lever. Improper setting may cause poor linearity

3.3.2 Linear positioner Installation Steps

1) Assemble the positioner with the bracket made in previous step by fastening the bolts. The bolt size is M8 x 1.25P.

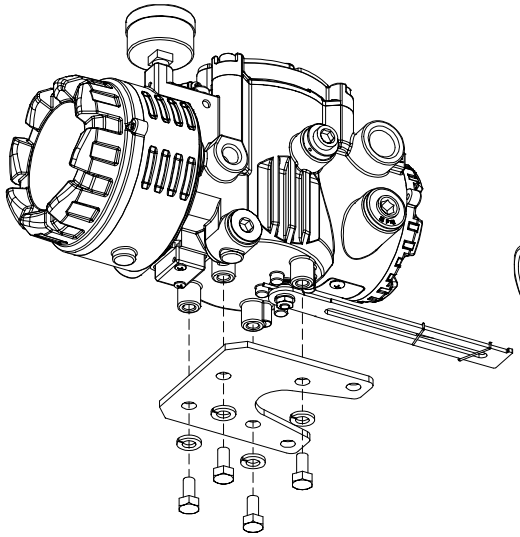

Fig. 3-4: Attaching to positioner to bracket

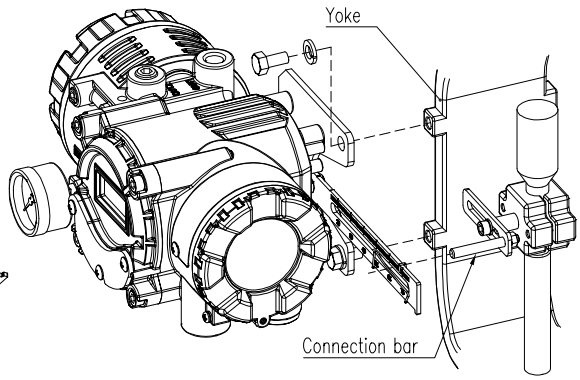

Fig. 3-5: Attaching the bracket to actuator yoke

2) Attach the positioner with the bracket to the actuator yoke
   – **DO NOT TIGHTEN THE BRACKET COMPLETELY.**

3) Connect connection bar to the actuator clamp. The hole gap on the feedback lever is 6.5 mm so the connection bar's outer diameter should be less than or equal to 6 mm.

4) Connect an air-filter regulator to the actuator temporarily. Supply enough air pressure to the actuator in order to position the valve stroke at 50 % of the total stroke.

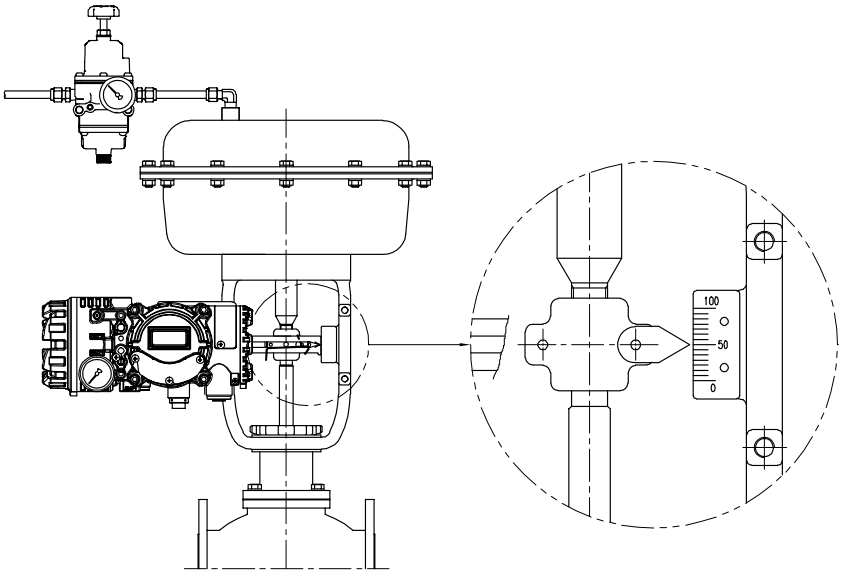

Fig. 3-6: Supplying proper regulated air to the actuator to position the valve at 50 %

5) Insert the connection bar between the feedback lever and lever spring. The connection bar must be located upward from the lever spring as shown the below left figure. If it is located downward from the lever spring as shown the below right figure, the connection bar or the lever spring will be worn out quickly because of excessive strong tension.



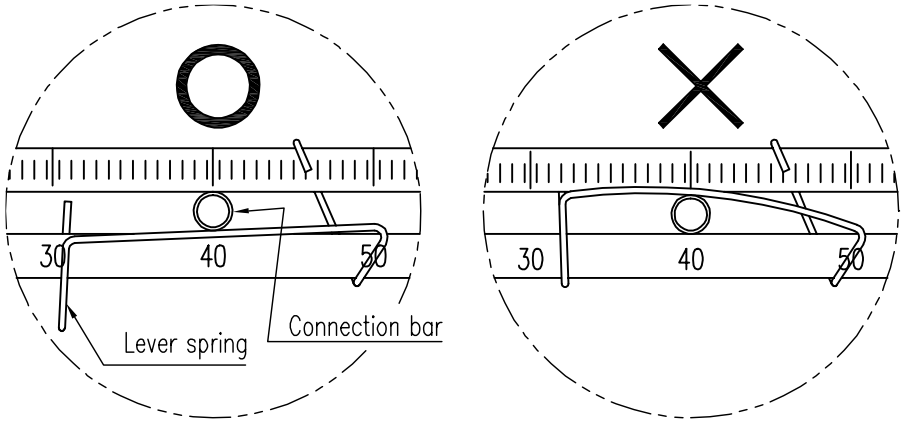

Fig. 3-7: Proper way to insert connection bar between feedback lever and lever spring

6) Check if feedback lever is vertical to the valve stem at 50 % of the valve stroke. If it is not vertical, adjust the bracket or the connection bar to make vertical. Improper installation may cause poor linearity.

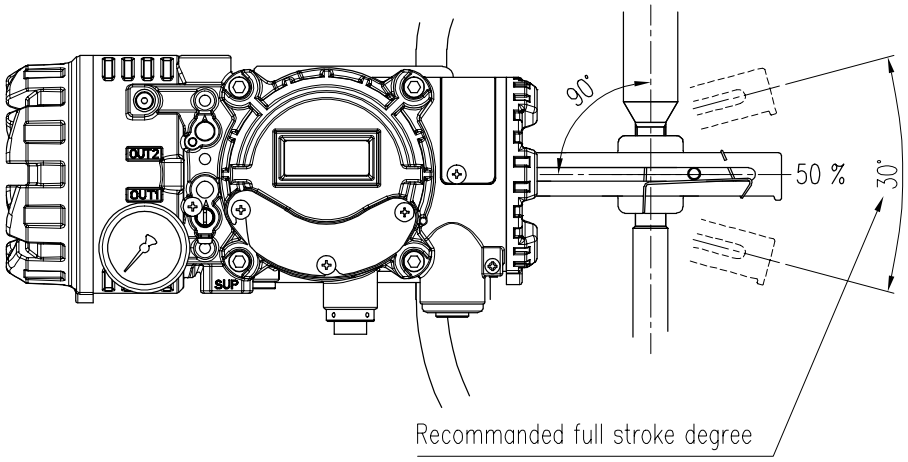

Fig. 3-8: Feedback lever and valve stem

7) Check the valve stroke. The stroke numbers are engraved on the feedback lever of the positioner. Position the connection bar at the number on the feedback lever which corresponds with the desired valve stroke. To adjust, move the bracket, the connection bar or both.

※ The effective linear lever angle is 30 degree.

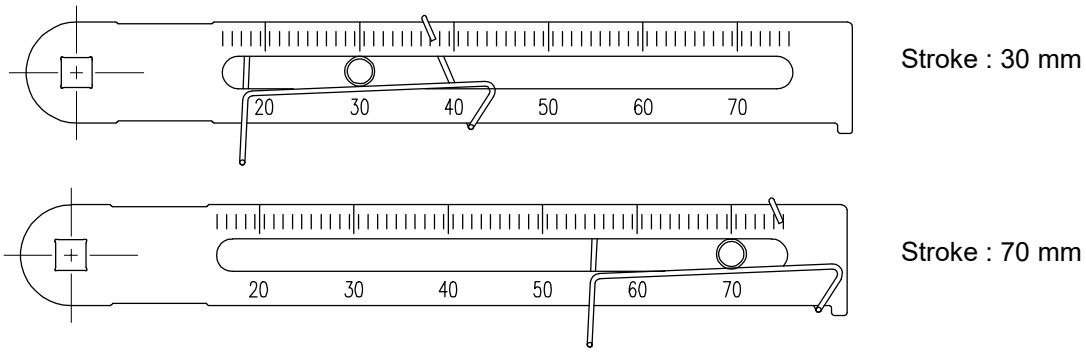

Fig. 3-9: Feedback lever and location of the connection bar

8) After installing the positioner, operate the valve from 0 % to 100 % stroke by using direct air to the actuator. On both 0 % and 100 %, the feedback lever should not touch the lever stopper, which is located on the backside of the positioner. If the feedback lever touches the stopper, the positioner should be installed further away from center of the actuator.

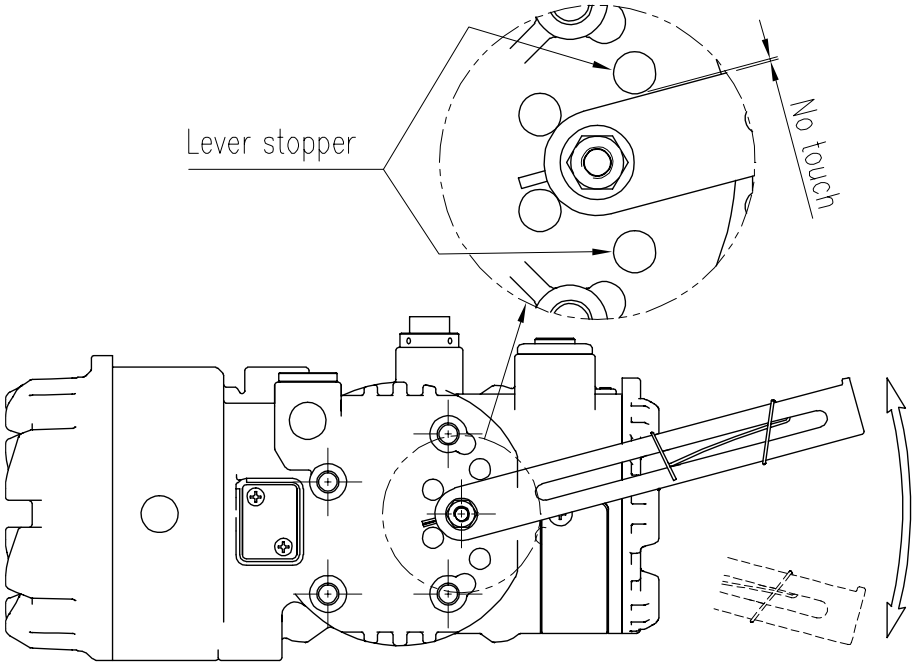

Fig. 3-10: Feedback lever should not touch lever stopper on 0 % to 100 % valve stroke.

9) After the installation, tighten all of the bolts on the bracket and the connection bar.

3.4 Rotary positioner Installation

Rotary positioner should be installed on rotary motion valve such as ball or butterfly type which uses rack and pinion, scotch yoke or other type of actuators which its stem rotates 90 degrees. Before proceeding with the installation, ensure following components are available.

3.4.1 Components

- Positioner
- Fork lever (Only Fork lever type)
- Rotary bracket set (2 pieces)
- 4 pcs x hexagonal headed bolts (M8 x 1.25P x 15L) : For the positioner and the upper bracket
- 4 pcs x M8 plate washers : For the positioner and the upper bracket
- 4 pcs x wrench headed bolts (M6 x 1P x 15L) : For the brackets
- 4 pcs x M6 nuts : For the brackets
- 4 pcs x M6 spring washers : For the brackets
- Bolts and washers to attach the lower bracket to actuator – not supplied with the positioner

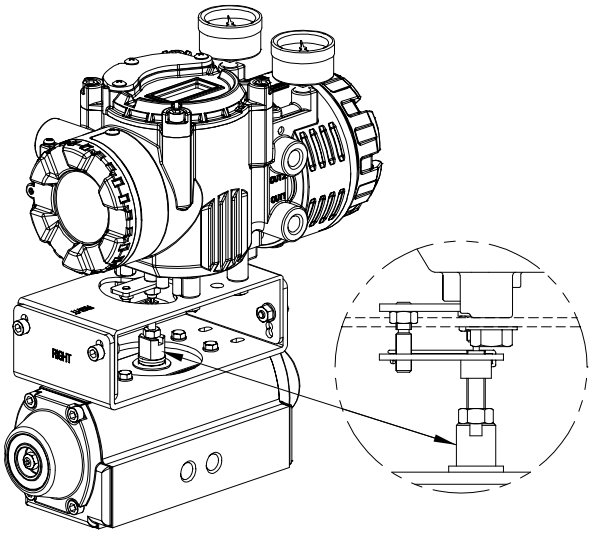

Fig. 3-11: Fork lever type

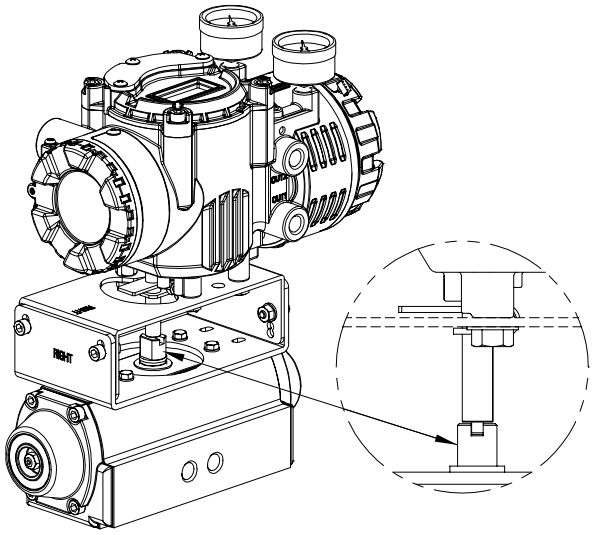

Fig. 3-12: Namur type

3.4.2 Rotary Bracket Information

The rotary bracket set (included with the positioner) contains two components. The bracket is designed to fit onto the actuator with 20 mm, 30 mm and 50 mm stem height (H) according to VDI/VDE 3845 standard. Please refer to below table how to adjust the height of the bracket.

Actuator stem height (H)	Markings of bolt holes			
	A-L	B-L	A-R	B-R
20 mm	H : 20	H : 20, 30	H : 20	H : 20, 30
30 mm	H : 30	H : 20, 30	H : 30	H : 20, 30
50 mm	H : 50	H : 50	H : 50	H : 50

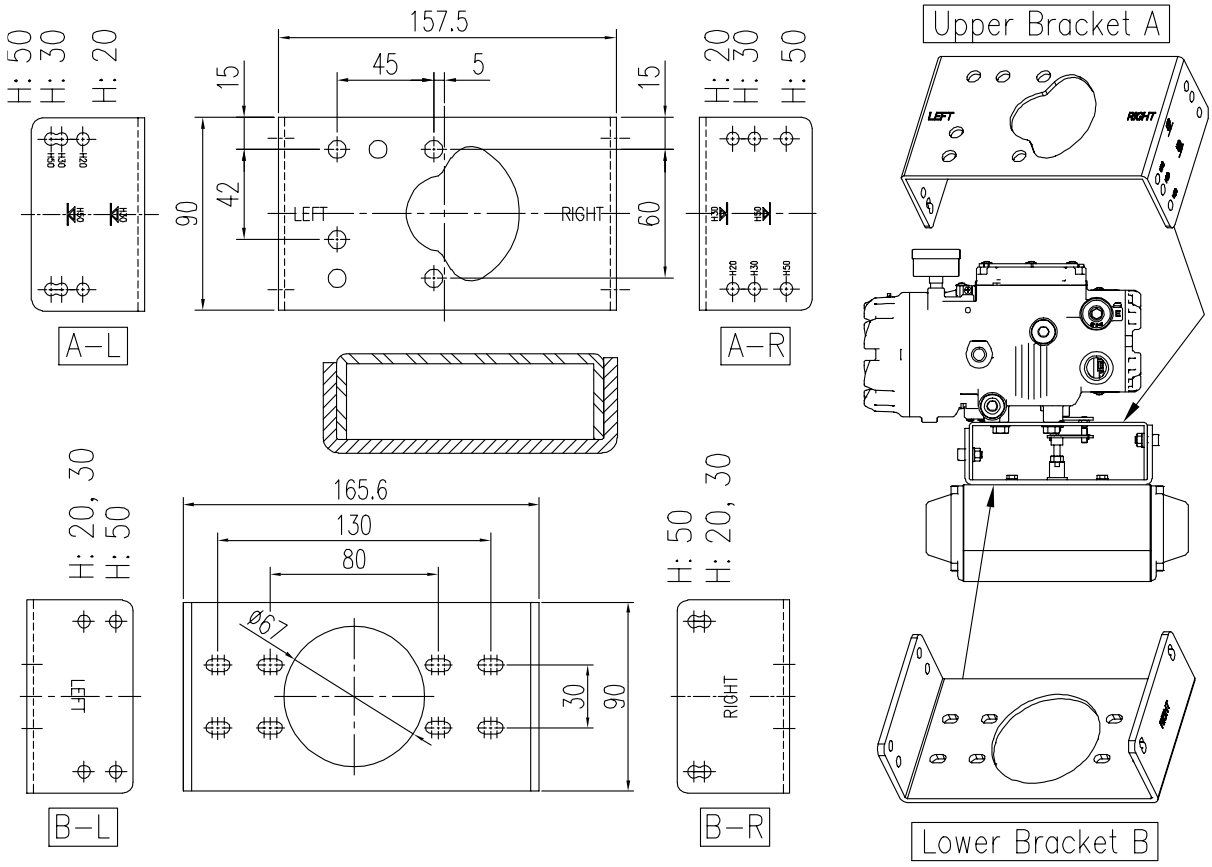

Fig. 3-13: Rotary Brackets and positioner

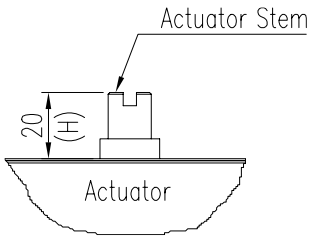

Fig. 3-14: Actuator stem Height

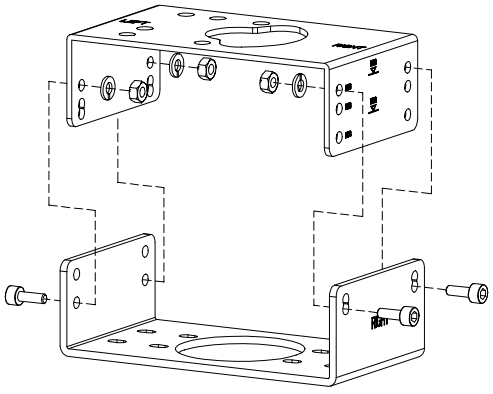

Fig. 3-15: Exploded Brackets

3.4.3 Rotary positioner Installation Steps

1) Please check the actuator's stem height and adjust the brackets by referring to the above bracket table.

2) Attached the brackets onto the actuator. It is recommended to use spring washer so the bolts will not be loosen from vibration.

3) Set rotation position of the actuator stem at 0 %. For single acting actuator, it is easy to check 0 % point by supplying no pressure to the actuator. For double acting actuator, check actuator stem's rotation direction – clockwise or counter-clockwise - by supplying pressure to the actuator.

4) (Only Fork lever type) Install the fork lever after setting actuator's stem at 0 %. Check the actuator stem's rotation direction – clockwise or counter-clockwise.
Installation angle of the fork lever should be 45˚ to the longitudinal direction of the actuator.

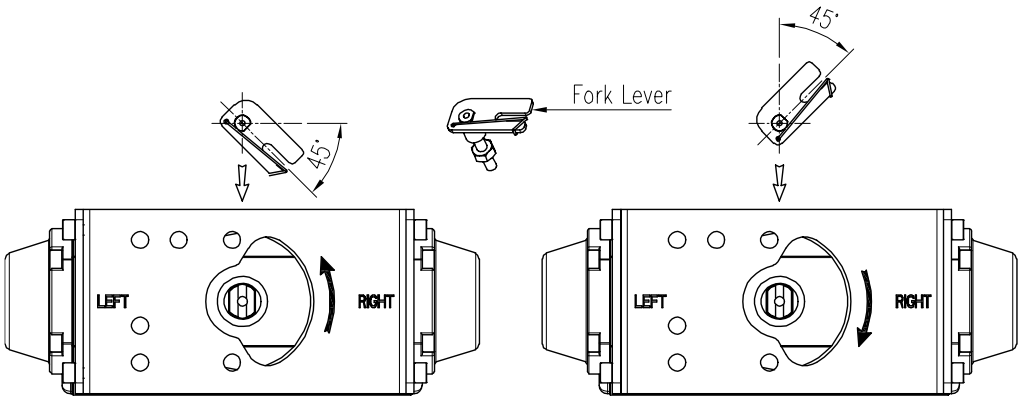

Fig. 3-16: Counter-clockwise and clockwise rotation.

5) (Only Fork lever type) After setting fork lever position, fasten lock nuts which are located on the bottom of the fork lever. Ensure to set the gap between the top of upper bracket and the top of the fork lever within **6 to 11 mm.**

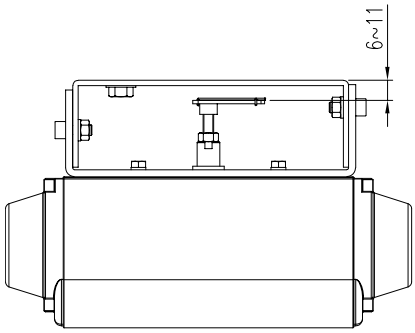

Fig. 3-17: Height to the bracket (fork lever type)

6) Attach the positioner to the bracket. <*Only fork lever type: Fix the clamping pin (5 mm Dia.) into the fork lever slot and insert center pin (2 mm Dia.) of the main shaft of the positioner into the hole of center of the fork lever. The clamping pin will be locked to the fork lever spring.*> Setting alignment of center of main shaft of the positioner and center of the actuator's stem is very important. Poor alignment of the main shaft and the actuator's stem decreases the positioner's durability due to unnecessary forces on the main shaft.

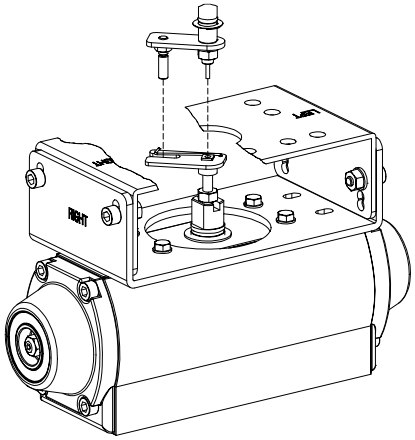

Fig. 3-18: Main shaft center alignment (Fork lever)

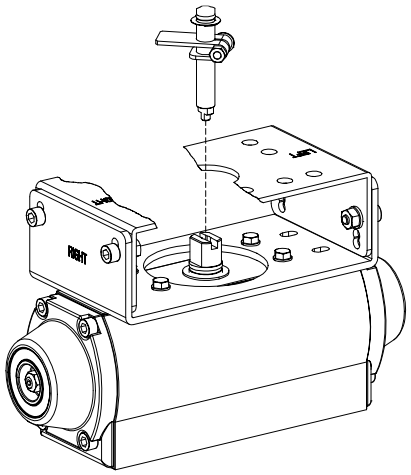

Fig. 3-19: Main shaft center alignment (Namur)

7) Tighten the positioner and the bracket with bolts **after checking the positioner's position.**

4 Connection - Air

4.1 Safety

- Supply pressure should be clean and dry air – avoiding moisture, oil and dust.
- Always recommended to use air filter regulator (i.e. YT-200 series).
- Rotork YTC Limited **has not tested positioner's operation with any other gases other than clean air. Please contact Rotork YTC Limited for any questions.**

4.2 Supply Pressure Condition



- Dry air with dew point of at least 10 °C lower than ambient temperature.
- Avoid from dusty air. Use 5 micron or smaller filter.
- Avoid oil.
- Comply with ISO 8573-1 or ISA 7.0.01.
- Supply pressure range is 0.14 to 0.7 MPa (1.4 to 7 bar)
- Set air filter regulator's pressure level 10 % higher than actuator's spring range pressure.

4.3 Piping Condition



- Ensure inside of pipe is clean of obstructions.
- Do not use pipeline that is squeezed or shows any type of damamges.
- Pipeline should have more than 6 mm of inner diameter (10 mm outer diameter) to maintain flow rate.
- The length of pipeline system should not be extremely long. Longer pipeline system may affect flow rate due to the friction inside of the pipeline.

4.4 Connection – Piping with actuator

4.4.1 Single acting actuator

Singe acting type positioner is set to use only OUT1 port. OUT1 port of positioner should be connected with supply port of actuator when using spring return actuator of single acting type.

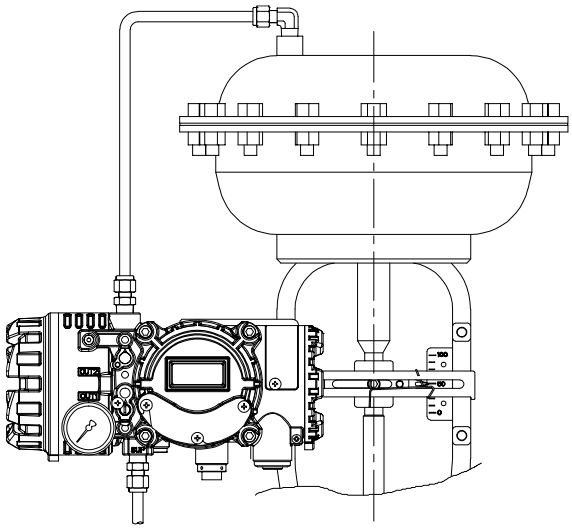

Fig. 4-1: Single acting linear actuator

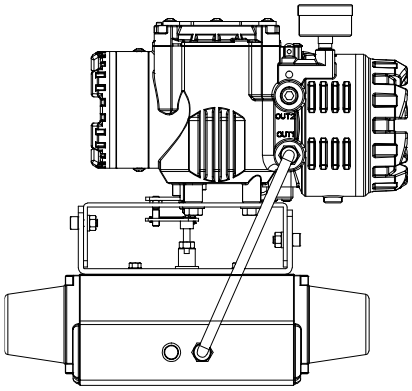

Fig. 4-2: Single acting rotary actuator

4.4.2 Double acting actuator

Double acting type positioner is set to use OUT1 and OUT2 port. As input signal increases, the supply pressure will be supplied through OUT1 port.

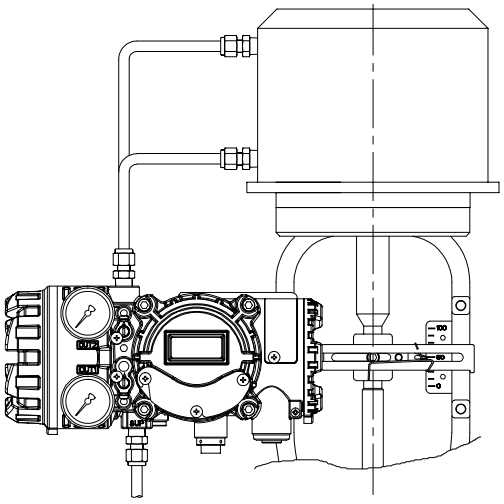

Fig. 4-3: Double acting linear actuator

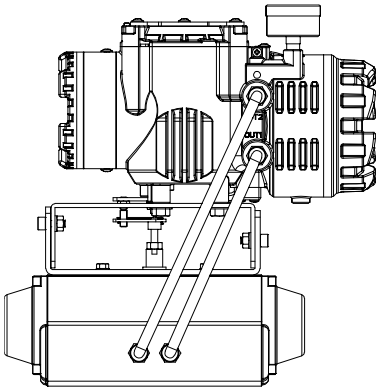

Fig. 4-4: Double acting rotary actuator

5 Connection – Power

5.1 Safety

- There are two conduit entries on the product. See “2.4 Product Code” for conduit entry threads.
- When installing in hazardous and explosive gas area, conduit tube or pressure-proof packing union must be used. The compound charging box should be the flameproof type and must be sealed completely.
- Before connecting terminal, ensure that the power is off completely. **Do not open the cover when the power is still alive.**
- Please use ring terminal to protect against vibration or any other external impact.
- Positioner usually uses 4-20 mA DC. Minimum ampere of input signal of standard type positioner is 3.5 mA and HART option positioner’s minimum ampere of input signal is 3.8 mA but maximum ampere of input signal should be 24 mA or under.
- **Compliance voltage of current source must be Min. 10 V and Max. 28 V. If the length of the supply cable between the current source and the positioner is long, or if there is a filter or safety barrier, then consider using a current source which could supply higher Compliance voltage.**
- Positioner with 4-20 mA Analog Output option must be supplied with **9 to 28 V DC** separately. For L/S option (transistor type), separate **24 V DC (50 mA)** must be supplied.
- **DO NOT connect Voltage source (9 to 28 V DC) to Input (4-20 mA DC) terminal (IN+, IN-) as it will cause PCB failure.**
- Positioner should be grounded.
- Please use twisted cable with conductor section are 1.25 mm^2 and that is suitable for 600 V (complying with the conductor table of NEC Article 310). The outer diameter of the cable should be between 6.35 to 10 mm. Use shield wire to protect against electro-magnetic field and noise.
- Please do not install the cable near high noise equipment, such as high-capacity transformer or motor.

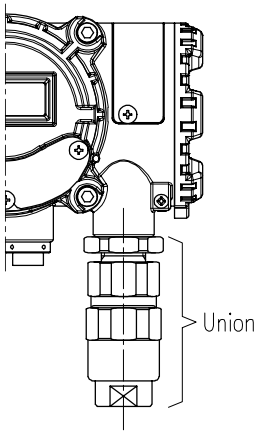

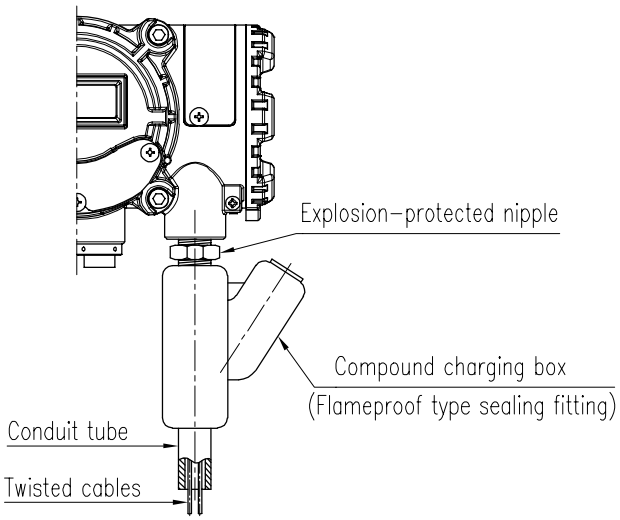

Fig. 5-1: Pressure-proof packing union

Fig. 5-2: Flame proof type compound charge box

5.2 Terminal overview

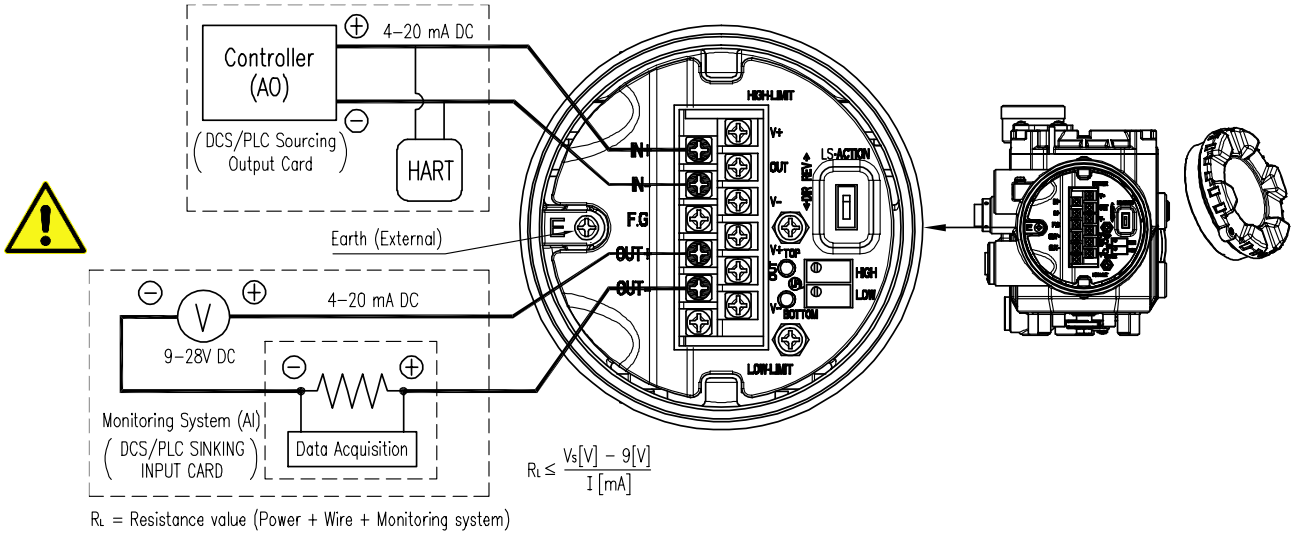

Fig. 5-3: Terminal Overview

IN +: Input Signal (+)
IN -: Input Signal (-)
F.G : Frame Ground
OUT+: 4-20 mA Analog Output (+)
OUT-: 4-20 mA Analog Output (-)

Upper right 3 terminals: Limit switch 100 % Point
Lower right 3 terminals: Limit switch 0 % Point
AO: Analog Output
AI: Analog Input
Vs: Voltage Source
RL: Load Resistance

5.2.1 Input Signal Terminal

1) Open terminal cover by removing stopper bolt using 2 mm wrench.
2) There are two conduit entries on the right hand of the positioner body. Please use appropriate union or conduit by considering the operating condition. Insert cables into the entry with using proper flameproof type packing union or conduit.
3) Input signal terminals are on the top left side of the terminal block of the terminal plate. Insert signal cables with ring terminal into the conduit entry and secure them with (+) and (-) terminals on the block. Make sure to tighten bolts to the ring terminals of the cables with 1.5 N • m (15 kgf • cm) torque. Please check the polarity of the terminals.
4) Close the terminal cover and fasten stopper bolt using 2 mm wrench.

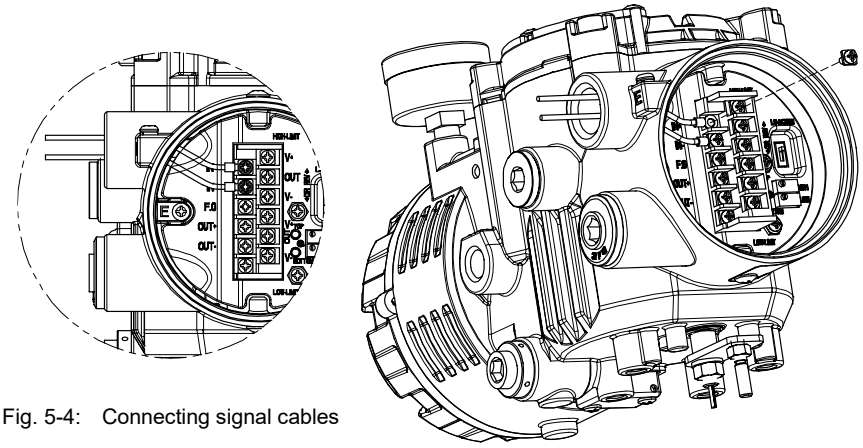

Fig. 5-4: Connecting signal cables

5.2.2 Analog Output Terminal

Locate terminal of analog output and connect (+) and (-) according to the polarity. Make sure to tighten bolts with 1.5 N • m (15 kgf • cm).

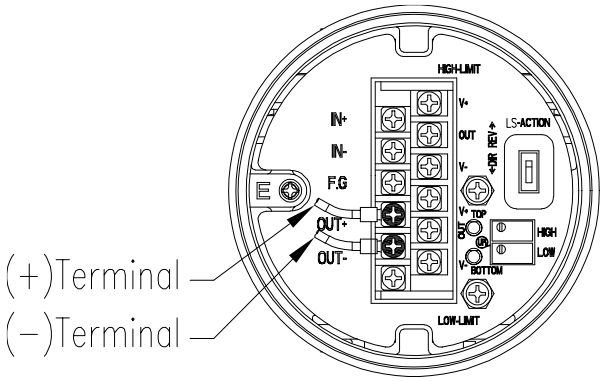

Fig. 5-5: Connecting feedback signal cables

5.2.3 Limit Switch Terminal

Locate terminal of limit switch and connect (+) and (-) according to the polarity. Make sure to tighten bolts with 1.5 N • m (15 kgf • cm).

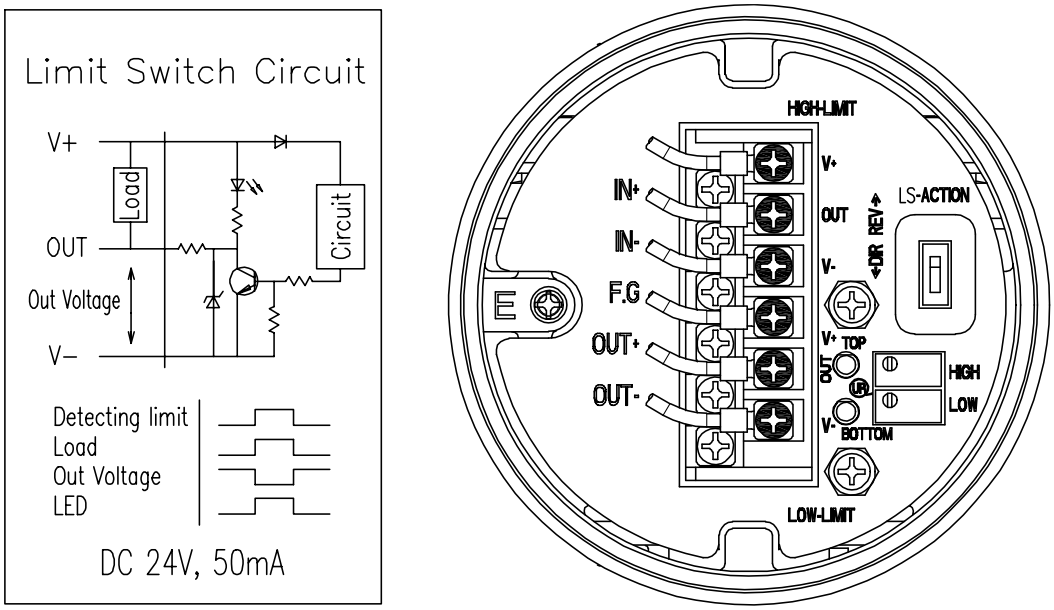

Fig. 5-6: Connecting Limit switch cables

5.2.4 Ground

1) Ground must be done before operating the positioner.
2) Open terminal cover and there is an internal ground bolt on the left of terminal plate. When using internal ground, use 2 mm wrench to loosen locking bolts of the terminal box cover. An external ground bolt is located next to the conduit entry. Please make sure that the resistance is less than 100ohm.
3) When using external ground, use (+) screw driver to unscrew the ground bolts. Insert external ground bolts and spring washer into ring type terminal of the ground cables and tighten them with bolts.

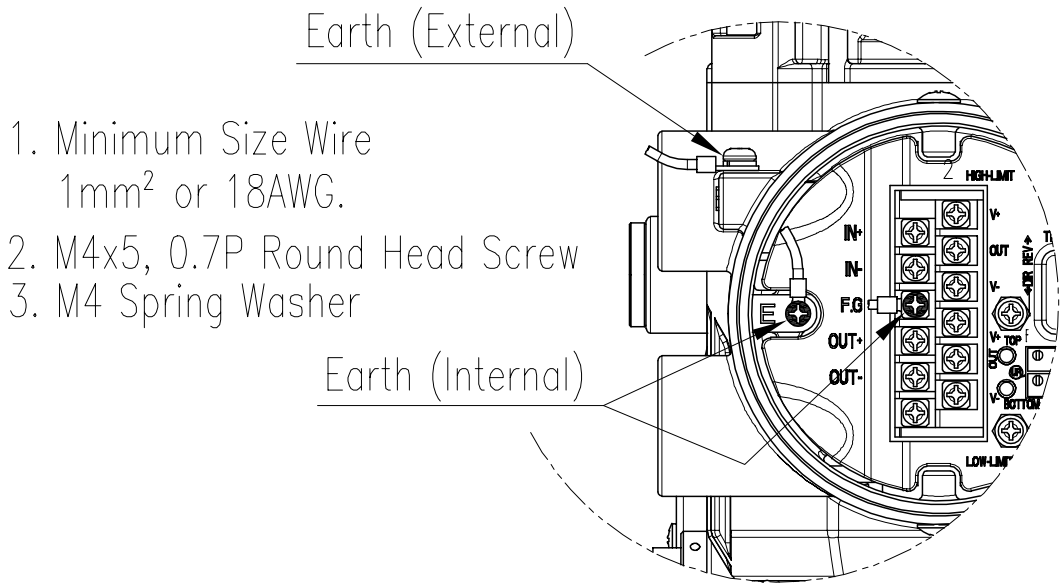

Fig. 5-7: Connecting Earth

6 Adjustments

6.1 Limit Switch Adjustment

1) HIGH variable resistor adjusts the sensing point of valve end-point. In case of Direct Action type, it will sense 4 mA point, and for Reverse Action type, 20 mA of input signal will be its sensing point. Upon sensing, red LED will be lighted.
2) LOW variable resistor adjusts the sensing point of valve zero-point. In case of Direct Action type, it will send 20 mA point, and for Reverse Action type, 4 mA of input signal will be its sensing point. Upon sensing, red LED will be lighted.
3) If V+ and OUT terminals are connected, electric current can be used on limit switch. It can light up control room's lamp or make alarm sound.
4) If V- and OUT terminals are connected, electric voltage can be used on limit switch. It can receive signal from a computer.
5) LS-ACTION dip switch enable to switch the action between direct or reverse action.
6) By adjusting variable resistor, sensing level can be set. If it is turned clockwise, sensing level will go up; if turned in counter-clockwise, sensing level will go down.

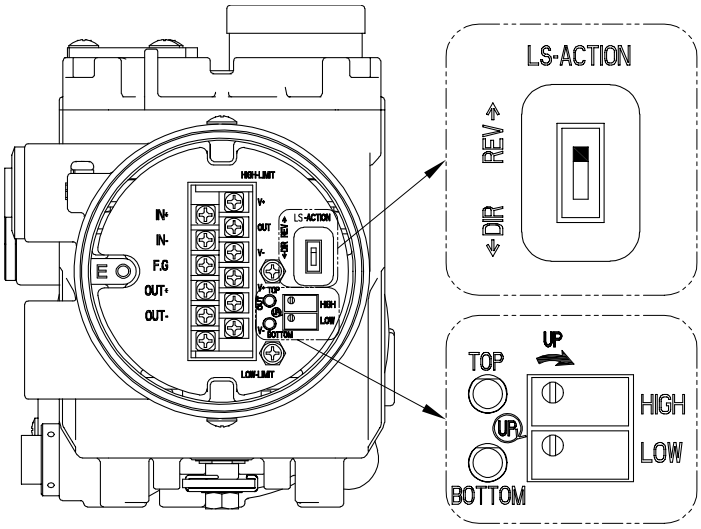

Fig. 6-1: Limit switch adjustment

6.2 Variable Orifice Adjustment

Hunting can be occurred when the actuator's volume is too small. In order to prevent hunting, orifice can be adjusted. By adjusting the orifice, the flow rate of the supply pressure to actuator can be adjusted. Please use (-) driver to adjust the orifice. When slot (-) of the orifice is horizontal, the flow rate becomes maximum. When slot (-) of the orifice is vertical, the flow rate becomes minimum.

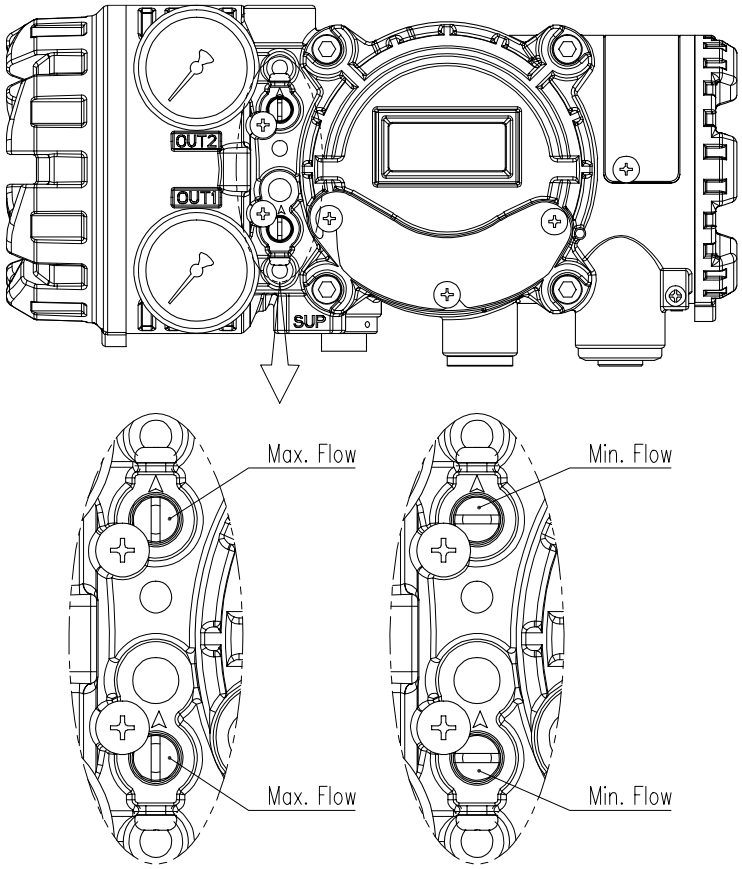

Fig. 6-2: Variable orifice adjustment

7 Maintenance

7.1 Supply air

If Supply air pressure is not stable or Supply air is not clean, the positioner may not function properly. Air quality and pressure should be checked regularly to see if the air is clean and pressure set is normal.

7.2 Seals

Once a year, it is recommend to check if there are any damaged parts of the positioner. If there are damaged rubber parts such as diaphragms, o-rings and packings, replace with new ones.

8 Auto Calibration and Operation

8.1 Warning

- **Auto Calibration must be performed after the valve and positioner are installed in the facility/process during the commissioning phase or when the positioner is dismounted and then newly mounted on the actuator.**
- **Since the Auto Calibration moves the valve and actuator, the valve must be isolated from the process before Auto Calibration to avoid process interruption.**

8.2 LCD display and buttons

8.2.1 LCD display and symbols

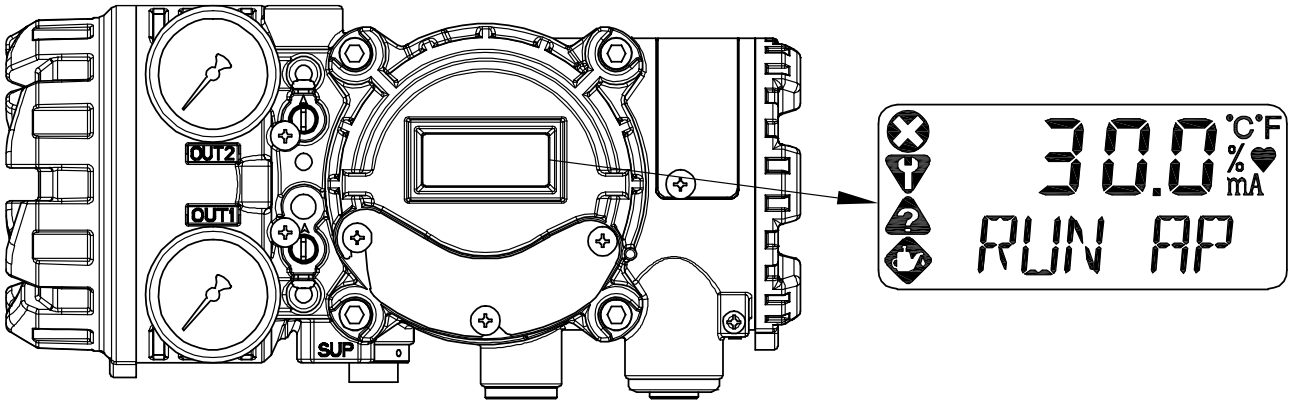

Fig 8-1

NE107 Symbols	Description	Symbols	Description
	Failure	°C	Degree in Celsius
	Functional Check	°F	Degree in Fahrenheit
	Out of Specifications	%	Percent
	Maintenance Required		Communication status
		mA	Current in mA

The four symbols located on the left are the symbols that display alarm messages classified in four groups in accordance with NAMUR NE107.

8.2.2 Button and function

Positioner has 4 buttons that perform various functions.

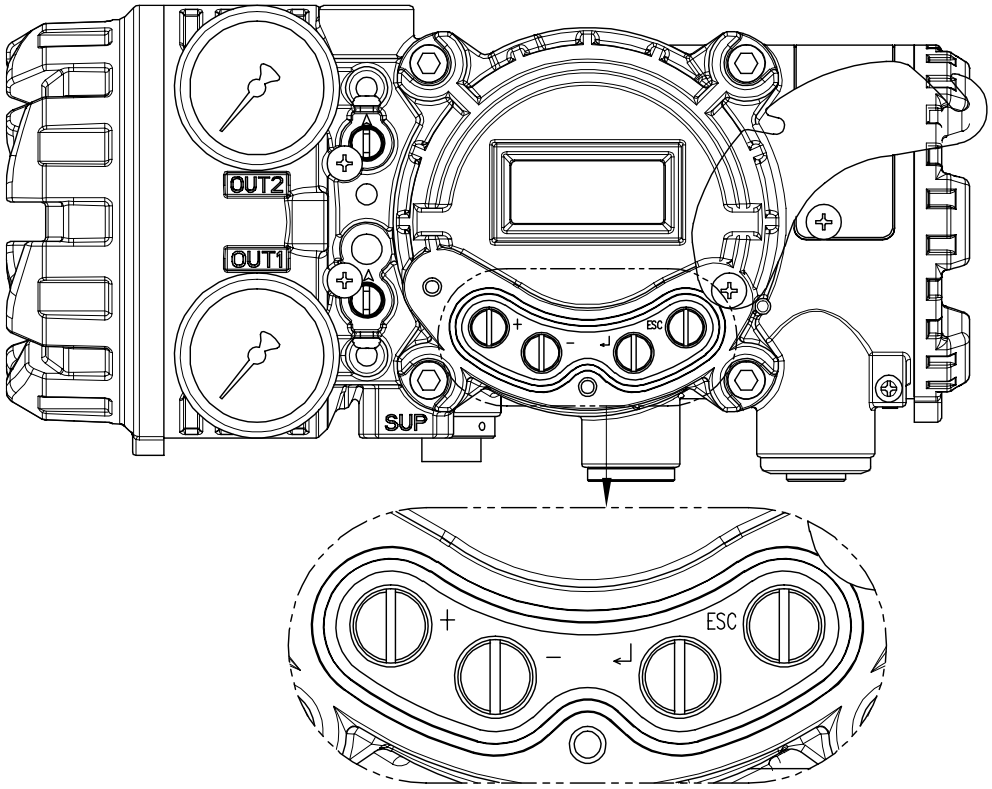

Fig 8-2 Standard type

Buttons	Function
UP	Used to navigate to each menu at the same level or to increase the value of the selected parameter.
DOWN	Used to navigate to each menu at the same level in reverse order of UP button or to decrease the value of the selected parameter.
< ↵ > (ENTER)	Use to select the current menu or function, or to store the value of a modified parameter.
ESC	Used go directly to parent menu from current menu.

8.3 Menu levels

The basic menu structure consists of the RUN Mode Monitor and the Configuration/Operation. The Run Mode Monitor menu allows you to monitor the values of various variables. The Configuration/Operation menu provides calibration and tuning, manual operation, configuration of I/O port function, configuration and self-test of positioner, configuration of diagnostic function, and basic information of the positioner. See below for information on how to move between Run Mode Monitor menu and Configuration/Operation menu and how to move within Run Mode Monitor menu or Configuration and Operation.

Press <↵> for more than 3 seconds in Run Mode to go to Configuration/Operation.

Run Mode Monitor	
RUN AP	Actual Position
RUN TP	Target Position
RUN dV	Deviation Value
RUN IV	Integral Output Value
RUN MV	Manipulator Value
RUN TEMP	Temperature
GOOd	Device / Process Status
RUN IN	Input Current
RUN SP	Set Position
RUN VEL	Velocity

ESC <↵>

UP/DN

ESC+UP/DN

Configuration and Operation	
CALIb	Calibration
MAN OPER	Manual Operation
CTRL PARM	Control Parameter
IN CFG	Input Configuration
OUT CFG	Output Configuration
dEV CFG	Device Configuration
dIAGNO	Diagnosis
INFO	Information

Press the <↵> button to select the lower menu of the Configuration/Operation menu. Press the ESC button to return to parent menu after completing configuration. Pressing the ESC button anywhere in the menu structure several times returns the user to the uppermost menu, Run Mode Monitor menu.

8.4 Run Mode (RUN)

The RUN Mode Monitor is displayed on the LCD display when power is provided to the positioner. Pressing the UP/DOWN button scrolls through the various process variables shown in table below. A "30.0 %" in the LCD display on the right indicates that the valve is in the 30 % position, and an "AP" indicates the abbreviation of "Actual Position".



The status variables displayed in the RUN Mode Monitor are divided into nine types as shown below.

On LCD	Name	Description
RUN AP [%]	Actual Position	Actual position of the valve indicated as %.
RUN TP [%]	Target Position	Target position in %
RUN dV [%]	Deviation Value	Deviation between target position and actual position.
RUN IV	Integral Output Value	Accumulated integral output value
RUN MV	Manipulator Value	Digital input value applied to I/P converter
RUN TEMP[℃]	Temperature	Internal temperature of positioner in °C.
** dS XXXX (PS XXXX)	**: Alarm Code dS: Device Status PS: Process Status XXXX: NE107 or Abbreviation of each alarm	The status of the current process or positioner is shown with English letter XXXX. Normally, GOOd is displayed when there is no problem, but alarm or status is displayed in abbreviated words (MNTR, FAIL, OUTS, FUNC and so on) along with NE107 symbol when a state change or alarm occurs. Any of the alarms is displayed alternately each time the ENTER button is pressed. (See 8.15 Status and Alarm Code)
RUN IN [mA]	Input Current	Current input signal in mA
RUN SP [%]	Set Position	Input signal converted into %
RUN VEL	Velocity	Displays the current valve stem speed as a Digit value.

When there is no alarm.



When an alarm occurs.

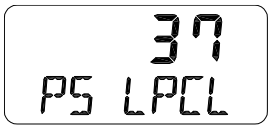

Explaining contents of alarm display

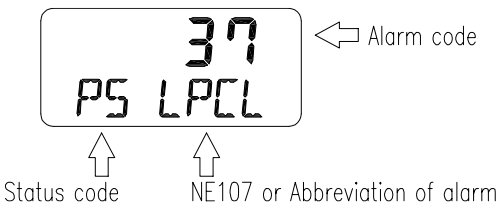

8.5 Configuration and Operation

The Table below shows the eight Configuration/Operation menus, each submenu, ranges for each parameter, and initial factory settings. The words shown in [ ] for each menu represent the abbreviations of each word displayed when operating the LCD screen.

Level 1	Level 2	Range	Initial factory setting
Calibration [CALIb]	Acting Type	[SINGLE, dOUbLE]	
	Auto Calibration 1 [AUTO 1]		
	Auto Calibration 2 [AUTO 2]		
	Travel Zero [TVL ZERO]		
	Travel End [TVL ENd]		
Manual Operation [MAN OPER]	Manual Operation by Manipulator Value [MAN MV]		
Control Parameters [CTL PARM]	Dead Band [dEAdbANd]	0.1 to 10.0 [%]	0.3 %
	Proportional Gain, Upward [KP UP]	0.1 to 50.0	1
	Proportional Gain, Downward [KP dN]	0.1 to 50.0	1
	Integral Gain, Upward [KI UP]	0.1 to 50.0	1
	Integral Gain, Downward [KI dN]	0.1 to 50.0	1
	Differential Gain, Upward [Kd UP]	0.1 to 50.0	1
	Differential Gain, Downward [Kd dN]	0.1 to 50.0	1
	Gap [GAP]	0.1 to 5.0 [%]	1 %
	GP [GP]	0.1 to 5.0	1
	GI [GI]	0.1 to 5.0	1
	GD [Gd]	0.1 to 5.0	1
	Piezo open time to minimum movement, Upward [PT UP]	0.1-50.0 [ms]	10 ms
	Piezo open time to minimum movement, Downward [PT DN]	0.1-50.0 [ms]	10 ms
	Error rate to speed reduction zone, Upward [ESR UP]	0-100 [%]	1 %
	Error rate to speed reduction zone, Downward [ESR DN]	0-100 [%]	1 %
	Auto Dead Band Mode [AUTO db]	oFF, [0%]	oFF
Input Configuration [IN CFG]	Signal Direction [SIG]	Normal, Reverse [NORM, REVS]	NORM
	Split Range Mode [SPLIT]	4-20, 4 to 12, 12 to 20, Custom [4.20, 4.12, 12.20, CSt]	4.20

Level 1	Level 2	Range	Initial factory setting
Input Configuration [IN CFG]	Custom Split Range Zero [CST ZERO]	4-20.0 mA]	4 mA
	Custom Split Range End [CST ENd]	4-20.0 [mA]	20 mA
	Characterization [CHAR]	Linear, Quick Open, Equal Percent, User Set 5point, User Set 21point [LIN, QO, EQ, U5, U21]	LIN
	User Set Characterization 5p [USER 5P]	0 to 110[%]	0 %, 25 %, 50 %, 75 %, 100 %
	User Set Characterization 21p [USER 21P]	0 to 110[%]	0 %, 5 %, 10 %, … 95 %, 100 %
	Tight Shut Open [TSHUT OP]	0 to 100 [%]	100.0 %
	Tight Shut Close [TSHUT CL]	0 to 100 [%]	0.3 %
Output Configuration [OUT CFG]	4-20 mA Analog Output Direction [PTM]	[NORM, REVS]	NORM
	4-20 mA Analog Output Zero [PTM ZERO]	0 to 100.00 [%]	
	4-20 mA Analog Output End [PTM ENd]	0 to 100.00 [%]	
	HART Feedback Direction [HT]	[NORM, REVS]	NORM
	Back Calculation [bACKCAL]	[oFF, on]	oFF
	Analog Output Function [AOF]	[OFF, TVLH, TVLL, dVTO, LPCL, FAIL, FUNC, OUTS, MNTR]	oFF
	AO Logic for Alarm Function [AO LOGIC]	[LO, HI]	LO
Device Configuration [dEV CFG]	Action [ACT]	[dIR, REVS]	REVS
	Linear Interpolation [ITP]	[oFF, on]	on with Linear oFF with Rotary
	Write Protect [W]	[UNLOCK, LOCK]	UNLOCK
	View Mode [VI]	[NORM, REVS]	NORM
	Polling Address [POL AddR]	[0 to 63]	0
	Factory Reset [dEFAULT]		
	Self-Test [SELFTEST]		
Diagnosis [dIAGNO]	View Monitoring Counts [VI CNTS]	[CYCL CNT, TVL ACUM, OPER CNT, FOP CNT, FCL CNT]	0
	Diagnosis Limit Configuration [LIMT CFG]	TVL HI, TVL LO, dV TIME, dV db, AL TVLH, AL TVLL, AL Dvto	100 %, 0 %, 10 sec, 5.0 %, oFF, oFF, oN

Level 1	Level 2	Range	Initial factory setting
Diagnosis [dIAGNO]	Reset Alarm Status [RST ALRM]	[oFF, on]	
	View Event Log [EVT LOG]	RECORd 0 - 19	0
Information [INFO]	Model Name [YT2***]		
	Firmware Version [SOFT VER] Download Date	*.*.** YYYYMMDD	Program current version Program input date
	Run Time [RT]	*.** RT *d	
	Upward Stroke Time [FULL OP]	**.**	
	Downward Stroke Time [FULL CL]	**.**	
	Position Sensor Type [PSNT]	PTN, NCS	
	Absolute Position in Angle [AbS ANGL]	***.* °	
	HART Protocol Revision [HART VER]	7	7

The Table below identifies the range and initial factory settings of each parameter for Menu Level 2 and Menu Level 3 where the menu hierarchy has been lowered by one level.

Level 2	Level 3	Range	Initial factory setting
View Monitoring Counts [VI CNTS]	Cycle Count [CYCL CNT]	0 to 4,200,000,000	
	Travel Accumulated [TVL ACUM]	0 to 168,000,000 [%]	
	Full Open Count [FOP CNT]	0 to 4,200,000,000	
	Full Close Count [FCL CNT]	0 to 4,200,000,000	
	Over Current Count [OVER CNT]	0 ~ 4,200,000,000	
	Piezo 0 Operating Count [PIEZO 0]	0 ~ 4,200,000,000	
	Piezo 1 Operating Count [PIEZO 1]	0 ~ 4,200,000,000	
LIMT CFG	Travel Hi Limit [TVL HI]	0 to 120 [%]	100 %
	Travel Lo Limit [TVL LO]	-10 to 50 [%]	0 %
	Deviation Time [dV TIME]	0 ~ 300 [sec]	60 sec
	Deviation Deadband [dV db]	0 ~ 10 [%]	5 %
	Travel Hi Limit Alarm Enable [AL TVLH]	oFF, on	oFF
	Travel Lo Limit Alarm Enable [AL TVLL]	oFF, on	oFF
	Deviation Time Out Alarm Enable [AL dVTO]	oFF, on	on

8.6 Calibration (CALIb)

The calibration consists of five menus.

Calibration [CALIb]	Acting Type [SINGLE/ dOUbLE]	Set manually single or double acting by actuator type
	Auto Calibration 1 [AUTO 1]	Calibration on the zero and end points of the valve
	Auto Calibration 2 [AUTO 2]	Calibration on all parameters required to operate the valve
	Travel Zero [TVL ZERO]	Manually adjust the zero point of the valve
	Travel End [TVL ENd]	Manually adjust the endpoint of the valve

Auto Calibration simplifies calibration without having to go through complex gain tuning. Once the current input between 4 and 20 mA is applied, it takes approximately 2-3 minutes to complete the automatic calibration, which may vary depending on the size of the actuator. There are two types of Auto Calibrations as shown below so that you select and use them as required.

※ Parameters reset after completion of Auto Calibration

Menu	Parameters	AUTO1	AUTO2
Calibration [CALIb]	Travel Zero [TVL ZERO]	O	O
	Travel End [TVL END]	O	O
Control Parameters [CTL PARM]	Dead Band [dEAdbANd]	X	O
	Proportional Gain, Upward [KP UP]	X	O
	Proportional Gain, Downward [KP dN]	X	O
	Integral Gain, Upward [KI UP]	X	O
	Integral Gain, Downward [KI dN]	X	O
	Differential Gain, Upward [Kd UP]	X	O
	Differential Gain, Downward [Kd dN]	X	O
	Gap [GAP]	X	O
	GP [GP]	X	O
	GI [GI]	X	O
	GD [Gd]	X	O
	Piezo open time to minimum movement , Upward [PT UP]	X	O
	Piezo open time to minimum movement , Downward [PT DN]	X	O
	Error rate to speed reduction zone, Upward [ESR UP]	X	O
	Error rate to speed reduction zone, Downward [ESR DN]	X	O
	Auto Dead Band Mode, [AUTO db]	X	O
Input Configuration [IN CFG]	Signal Direction [SIG]	X	O
Output Configuration [OUT CFG]	4-20 mA Analog Output Direction [PTM]	X	O
	HART Feedback Direction [HT]	X	O

Device Configuration [dEV CFG]	Action [ACT]	X	O
	View Mode [VI]	X	O
	Linear Interpolation [ITP]	O	O

8.6.1 Acting Type (SINGLE / dOUBLE)

This is used to change the settings of the positioner to SINGLE or dOUBLE, depending on the actuator type. The setting of the SINGLE and dOUBLE affects the automatic calibration, so it must be set carefully considering the actuator type.

If the actual acting type of Actuator is different from the set value, it will cause a problem, so make sure that the actual acting type matches the set value.

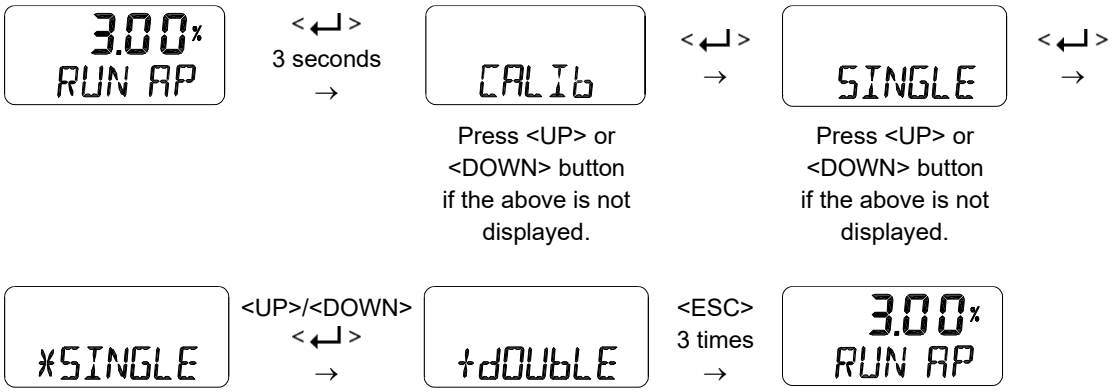

8.6.2 Auto Calibration 1 (AUTO 1)

AUTO 1 is used to set only the origin and end points. It does not change the PID and other parameter values that already have been set. This is usually used when the origin and end points of the already calibrated positioner have changed slightly.

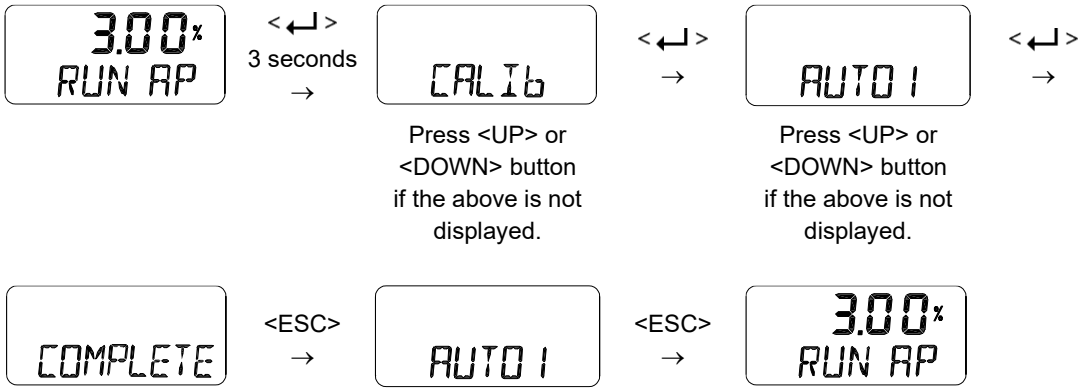

※ Parameters reset after completion of Auto Calibration 1

Menu	Parameters	Description
Calibration [CALIb]	Travel Zero [TVL ZERO]	The valve stroke reset to the zero point when the pressure in the OUT1 port is completely released.
	Travel End [TVL ZERO]	The valve stroke reset to the end point when the pressure in the OUT1 port is fully filled.

8.6.3 Auto Calibration 2 (AUTO 2)

AUTO 2 tunes up and then changes all parameters required for valve operation. Be sure to perform this AUTO 2 when installing the positioner on the valve for the first time or when reinstalling the positioner from the actuator.

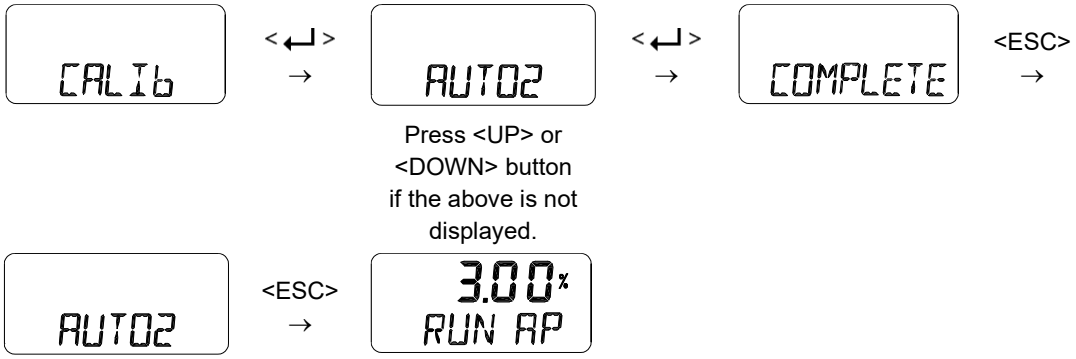

※ Parameters reset after completion of Auto Calibration 2

Menu	Parameters	Description
Calibration [CALIb]	Travel Zero [TVL ZERO]	The valve stroke reset to the zero point when the pressure in the OUT1 port is completely released.
	Travel End [TVL ZERO]	The valve stroke reset to the end point when the pressure in the OUT1 port is fully filled.
Control Parameters [CTL PARM]	PID Parameter [KP UP], [KP dN] [KI UP], [KI dN] [Kd UP], [Kd dN] [PT UP], [PT DN] [ESR UP], [ESR DN]	Applied after automatically calculating the PID value according to the valve or actuator.
	GAP, GP, GI, Gd	Change to default value
Input Configuration [IN CFG]	Signal Direction [SIG]	Initialized in normal direction.
Output Configuration [OUT CFG]	4-20 mA Analog Output Direction [PTM]	Initialized in normal direction.
	HART Feedback Direction [HT]	Initialized in normal direction.

Device Configuration [dEV CFG]	Action [ACT]	Initialized in normal direction.
	View Mode [VI]	Initialized in normal direction.
	Linear Interpolation [ITP]	Automatically set On/Off according to the angle of use of the feedback lever (On when feedback lever use angle > 20°)

8.6.4 Travel Zero (TVL ZERO) and Travel end (TVL ENd)

This is a manual adjustment of the zero point or endpoint of the valve after auto calibration. Once you enter the TVL ZERO (or TVL ENd) setting, press the UP/DOWN button to change the zero point (or endpoint) of the valve, and then press the ENTER button to save it. The saved position is recognized as the zero (or endpoint) of the valve.

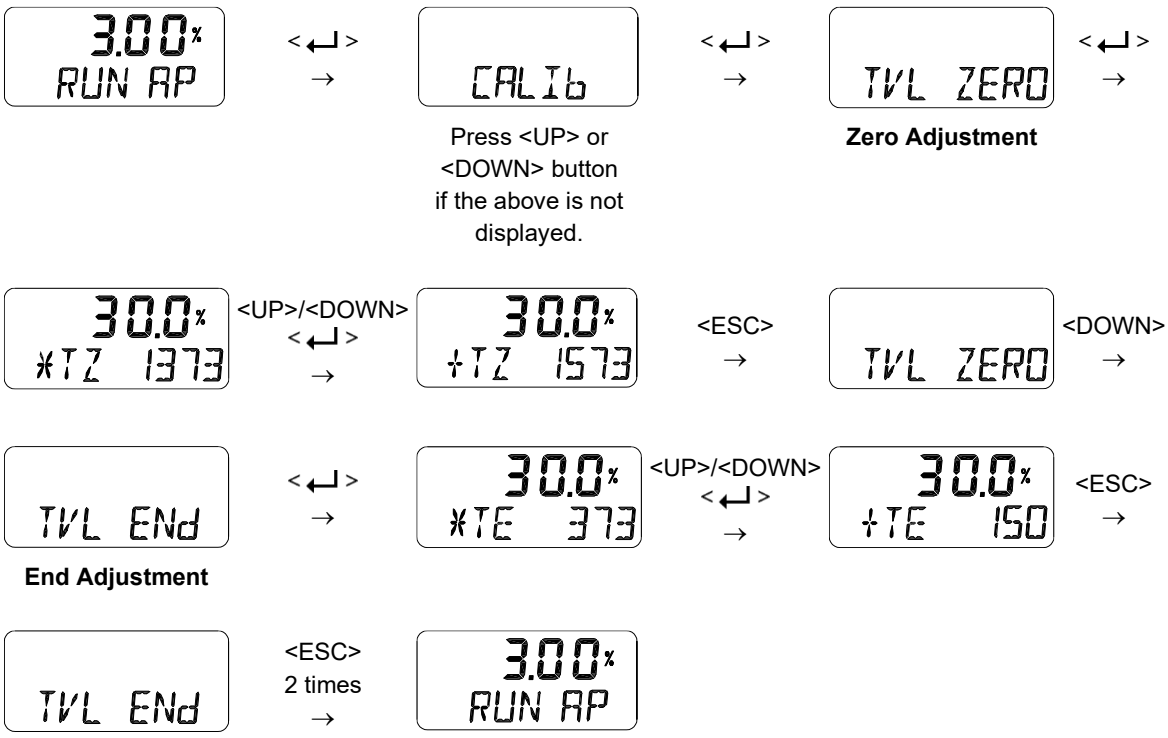

8.7 Manual Operation (MAN OPER)

It is used to manually raise or lower the valve stem by operating the UP or DOWN buttons. This can be used to observe the move of valve stem without any external input signals. When engaged, the current input signal to the positioner has no effect on the positioner.

Manual operation may affect the process in service, so use this function when the process is down or when it is acceptable to shut down the process.

8.7.1 Manual Operation by Manipulator Value (MAN MV)

The input to I/P converter is incremented or decremented by the UP and DOWN buttons based on the currently entered I/P input value, which moves the stem of the valve up and down. Once out of the menu by <ESC>, the positioner is controlled again by an input signal.

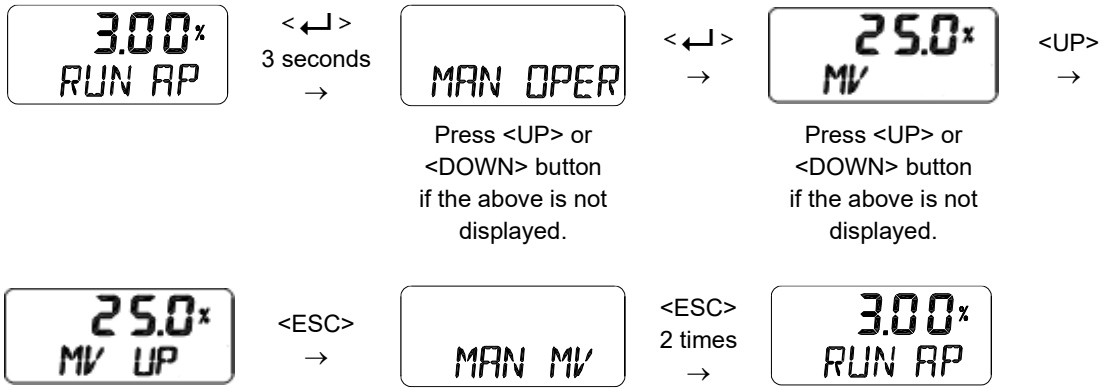

8.8 Control Parameters (CTL PARM)

Followings are the values changeable at the Control Parameters Mode.

1) Dead Band (dEAdbANd)
2) Forward P parameter (KP UP) and reverse P parameter (KP dN)
3) Forward Integral time parameter (KI UP) and reverse Integral time parameter (KI dN)
4) Forward D parameter (Kd UP) and reverse D parameter (Kd dN)
5) GAP Parameter (GAP)
6) GAP P Parameter (GP)
7) GAP I Parameter (GI)
8) GAP D Paramter (Gd)
9) Piezo open time to minimum movement , Upward [PT UP] and Downward [PT DN]
10) Error rate to speed reduction zone, Upward [ESR UP] and Downward [ESR DN]
11) Auto Dead band Mode (AUTO db)

8.8.1 Dead Band (dEAdbANd)

Deadband indicates the size of the allowable deviation that is set near the target position. If the valve has large packing friction, this value can be adjusted and set accordingly to prevent the limit cycle caused by the friction. If the deadband is set to 0.5 %, its range is ±0.5 % of the target.

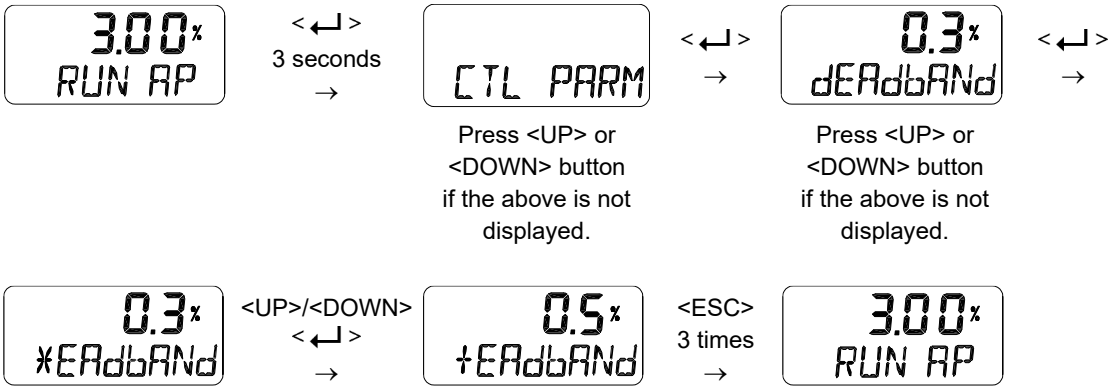

8.8.2 Forward P parameter (KP UP) and reverse P parameter (KP dN)

The KP parameter is the proportional control constant to the calibration signal to reduce the error between the target position and the current position, the KP UP is applied when the valve moves in the direction of increasing output air pressure, and KP dN is applied when the valve moves in the direction of venting output air pressure. A larger value of gains "KP UP" or "KP dN" moves the valve faster to reach a target position, but the valve tends to oscillate if set to high. In contrast, smaller gains improve stability, but make it slower to reach a target position.

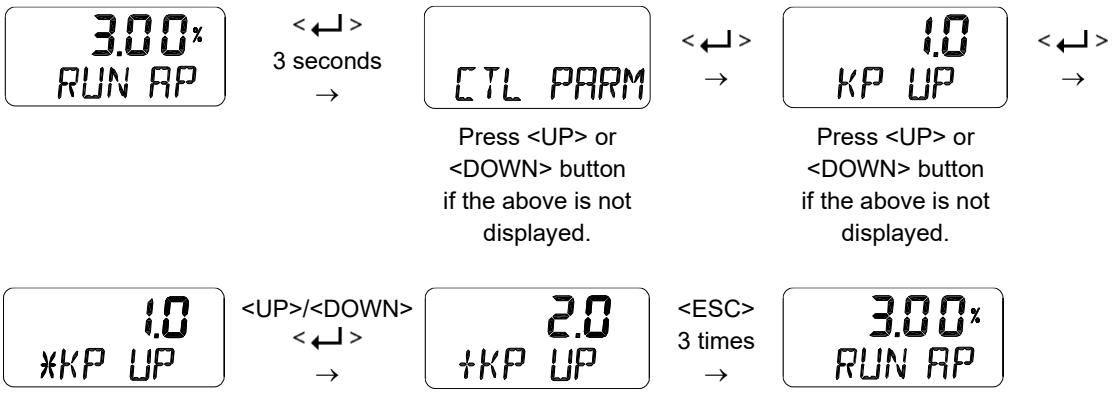

8.8.3 Forward Integral time parameter (KI UP) and reverse Integral time parameter (KI dN)

KI parameters are an integral value that add the error correction signal to the existing calibration signal, KI UP is applied when the valve moves in the direction of increasing the output air pressure, and KI dN is applied when the valve moves in the direction of decreasing the output air pressure. A smaller KI makes the valve faster to reach a target position and tends to cause oscillation.

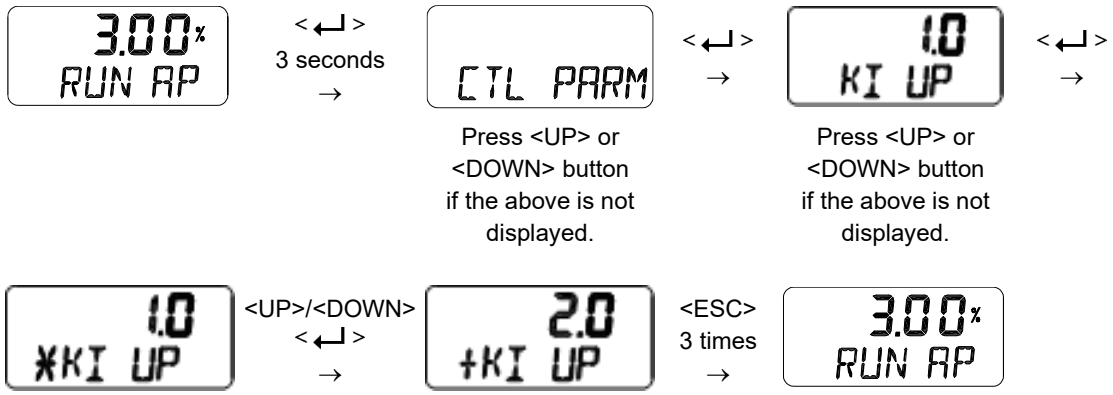

8.8.4 Forward D parameter (Kd UP) and reverse D parameter (Kd dN)

The Kd parameter is a differential value that adds the correction signal due to the rate of error to the existing calibration signal. Kd UP is applied when the valve moves in the direction of increasing output air pressure, and Kd dN is applied when the valve moves in the direction of decreasing output air pressure. A larger D value makes the valve hunting easier, and a smaller value can lead to poor linearity or dynamic properties.

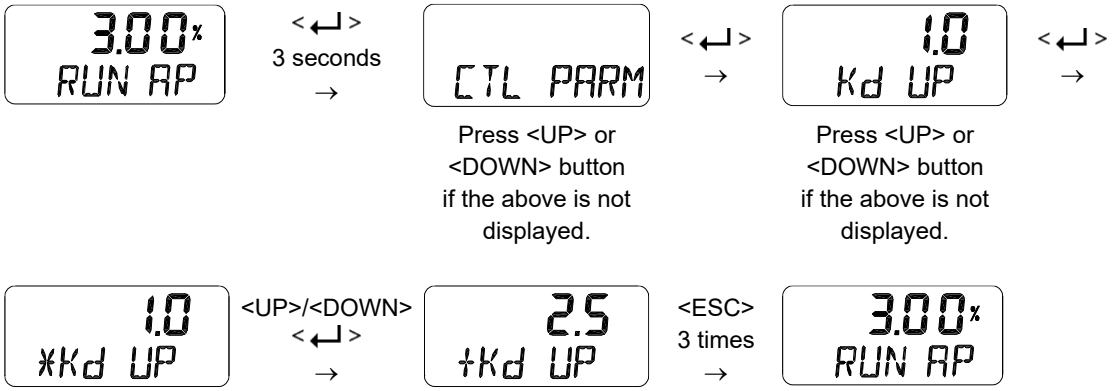

8.8.5 GAP Parameter (GAP)

The GAP parameter sets the control range at which Gap control begins. If the current position of the valve falls within the setting range GAP (%) relative to the final target position (target position ± GAP), Gap control operates along with PID Control. When the GAP control begins, the PID GAP parameters (GAP P, GAP I and GAP D) interacted with the PID parameters (KP, KI and KD) are applied to valve control.

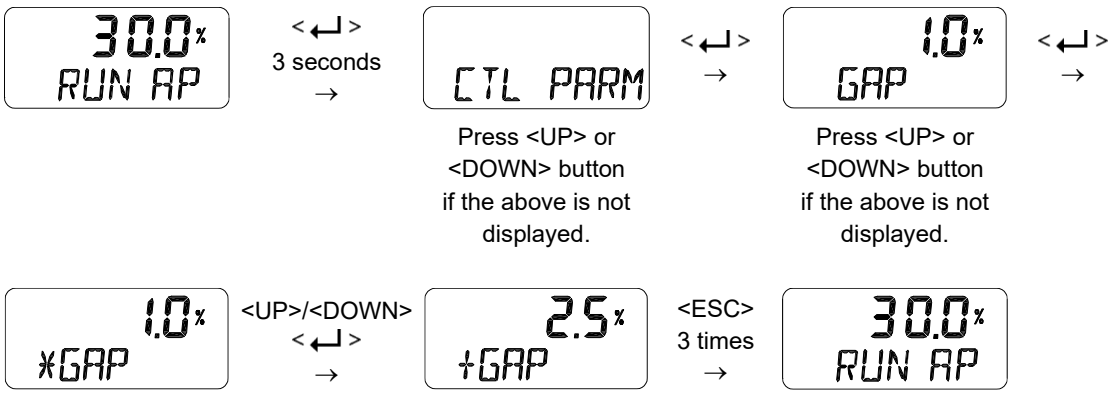

8.8.6 GAP P parameter (GP)

GP is a proportional gain. If the valve position is within the GAP parameter range, a proportion gain created based on KP and GP is applied to valve control.

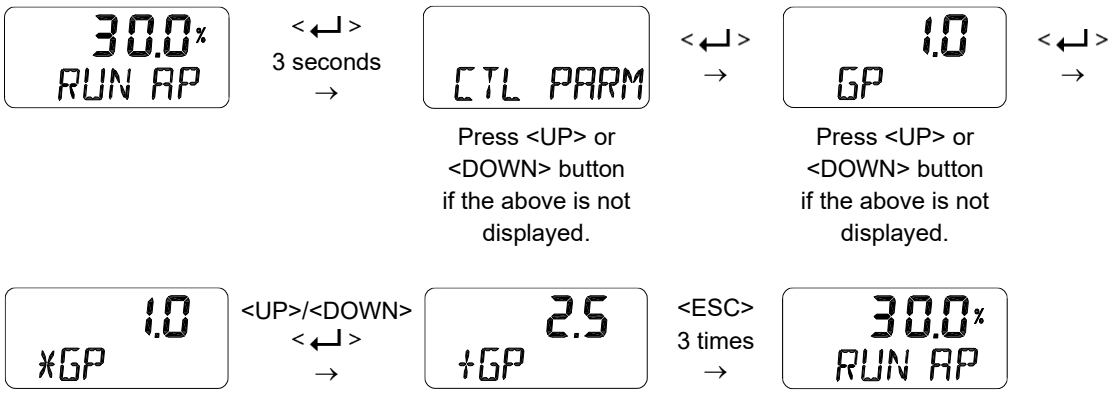

8.8.7 GAP I parameter (GI)

GI is an integral gain. If the valve position is within the GAP parameter range, an integral gain created based on 1/KI and GI is applied to valve control.

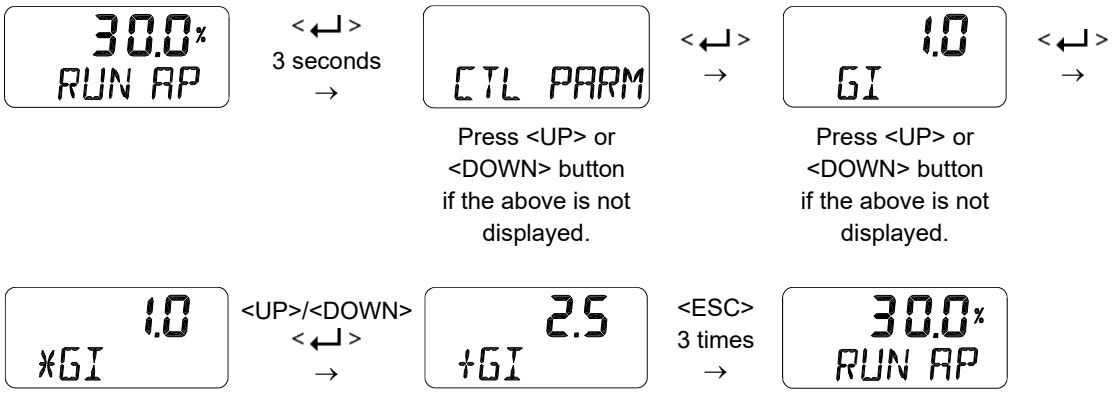

8.8.8 GAP D parameter (Gd)

Gd is a differential gain. If the valve position is within the GAP parameter range, a differential gain created based on Kd and Gd is applied to valve control.

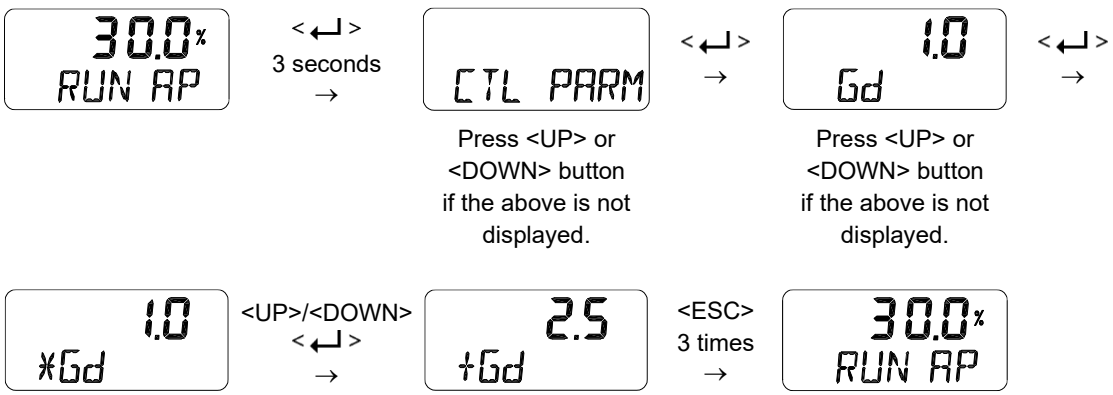

8.8.9 Piezo open time to minimum movement , Upward [PT UP] and Downward [PT dN]

PT parameter is a value that represents the minimum length of the internal signal that controls the valve. PT UP represents the PT parameter when the input signal increases, and PT dN represents the PT parameter when the input signal decreases. Basically, it is automatically set when Auto 2 calibration is performed.

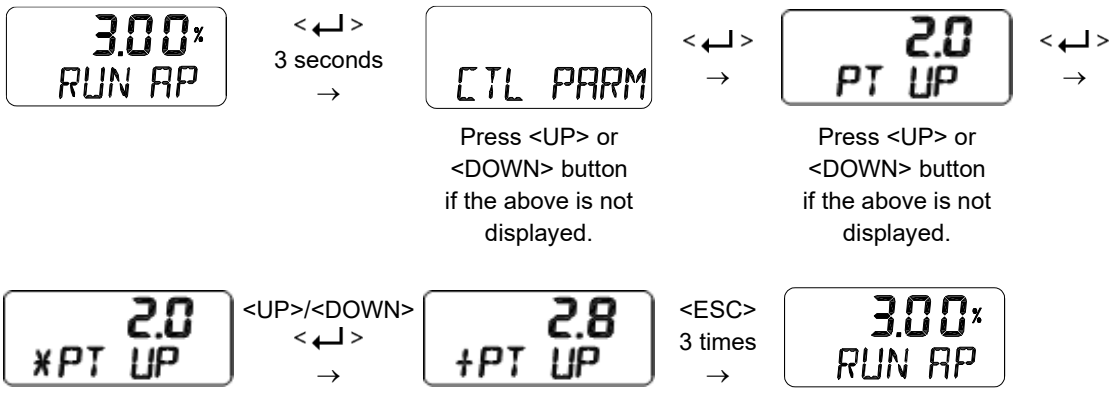

8.8.10 Error rate to speed reduction zone, Upward [ESR UP] and Downward [ESR DN]

The ESR parameter starts PWM (Pulse Width Modulation) control when it enters the set range, and the minimum PWM value is the PT (8.8.9 PT UP, PT dN) set value. If the ESR parameter value is small, the speed of finding the target value is fast, and overshooting may occur.

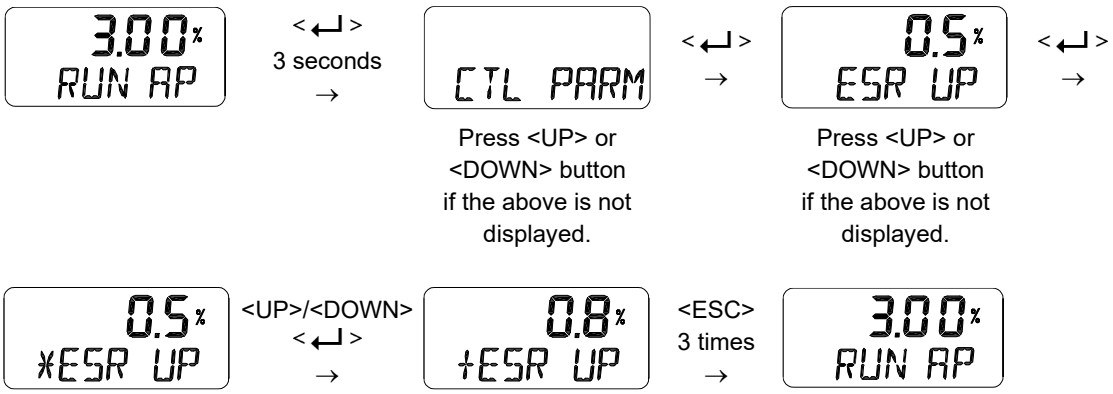

8.8.11 Auto Dead band Mode (AUTO db)

This function is used to suppress a hunting for valves with high static friction. The initial value is OFF and it shall be set to 0 % to activate the auto dead band automatically. The value is changed to a proper value once this mode is activated.

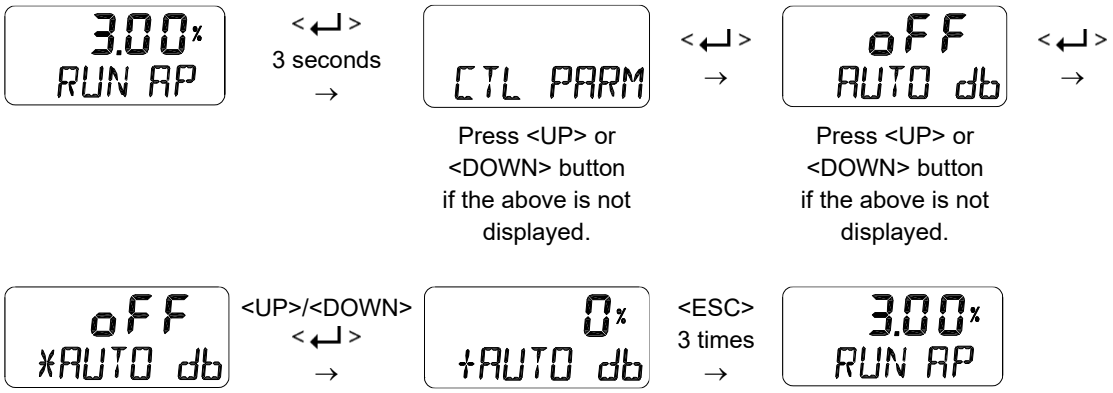

8.9 Input Configuration (IN CFG)

Followings are the values changeable at the Input Configuration Mode.

1) Signal Direction (SIG NORM / REVS)
2) Split Range Mode (SPLIT)
3) Custom Split Range Zero (CST ZERO)
4) Custom Split Range End (CST ENd)
5) Characterization Curves (CHAR)
6) User Set Characterization 5 Points (U5)
7) User Set Characterization 21 Points (U21)
8) Tight Shut Open (TSHUT OP)
9) Tight Shut Close (TSHUT CL)

8.9.1 Signal Direction (SIG NORM / REVS)

This function changes the action type of the valve, NORM or REVS. if NORM is selected, the air is completely released through output port 1 of the positioner when 4 mA is applied, and the maximum air pressure is loaded to the actuator through output port 1 when 20 mA is applied. If set to REVS, the maximum air pressure is loaded to the actuator via output port 1 when an input current of 4 mA is applied to the positioner.

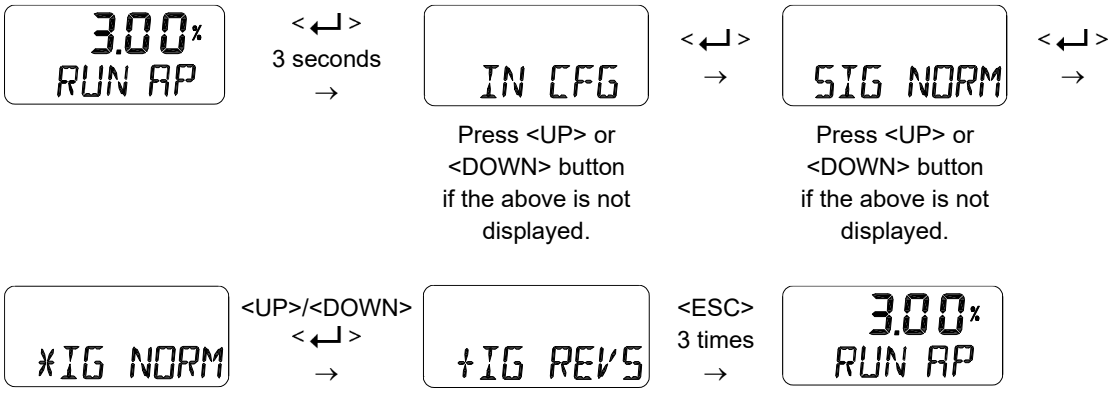

8.9.2 Split Range Mode (SPLIT)

This is used to set the range of the input signal to control the entire stroke of the valve. You can select one of the four input signals that consists of 4-20 mA, 4 to 12 mA, 12 to 20 mA, and user settings (Custom, CSt). 4-20 mA is the factory setting.

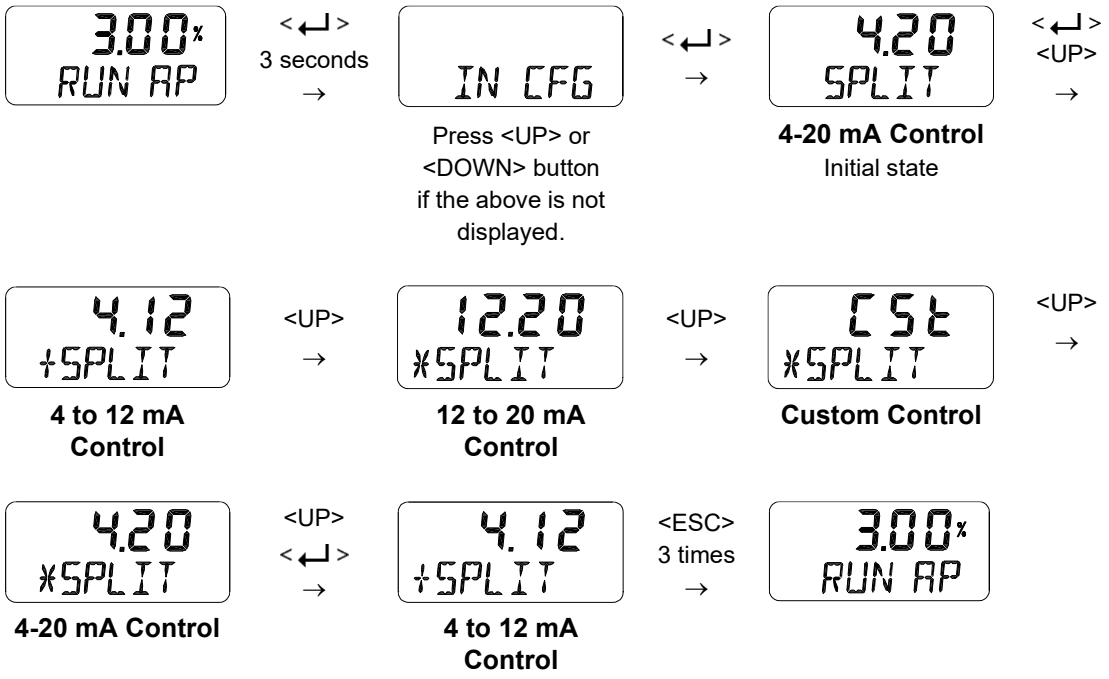

8.9.3 Custom Split Range Zero (CST ZERO)

It is used to set the current corresponding to the zeropoint when the valve position of 0 to 100 % is controlled by the user-set CUSTOM. For example, if the valve is controlled by 6 to 20 mA instead of 4-20 mA, CST ZERO is 6 mA. However, the difference of the current between the origin point and the endpoint must be greater than 4 mA.

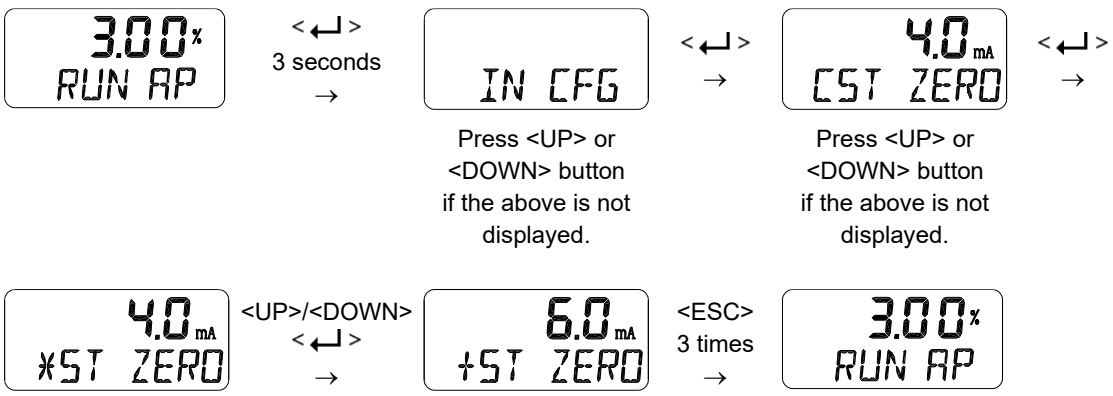

This function is activated by saving the Split Range Mode (SPLIT) of above Section 8.9.2 as “CSt”.

8.9.4 Custom Split Range End (CST ENd)

It is used to set the current corresponding to the endpoint when the valve position of 0 to 100 % is controlled by the user-set CUSTOM. For example, if the valve is controlled by 4 to 18 mA instead of 4-20 mA, CST ENd is 18 mA. However, the difference of the current between the origin point and the endpoint must be greater than 4 mA.

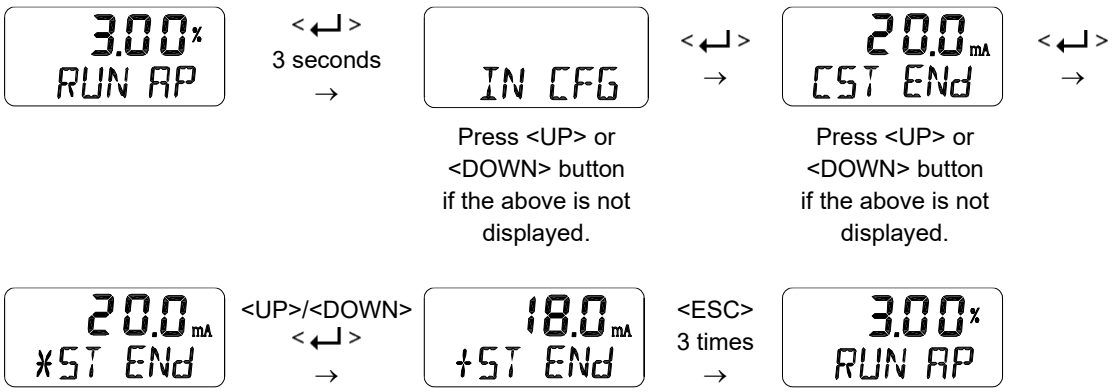

This function is activated by saving the Split Range Mode (SPLIT) of above Section 8.9.2 as “CSt”.

8.9.5 Valve Flow Characterization Curves (CHAR)

The flow characteristic curve of valve is available by selecting one of the following: Linear(LIN), Quick Open(QO), Equal Percentage(EQ), User Set Characterization 5 Points (U5) and User Set Characterization 21 Points(U21).

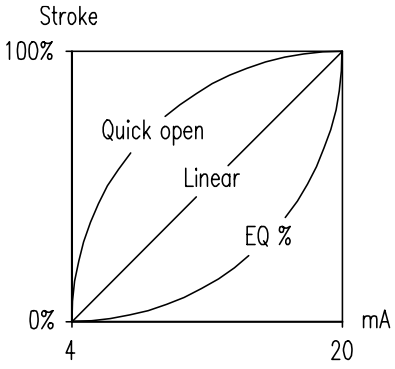

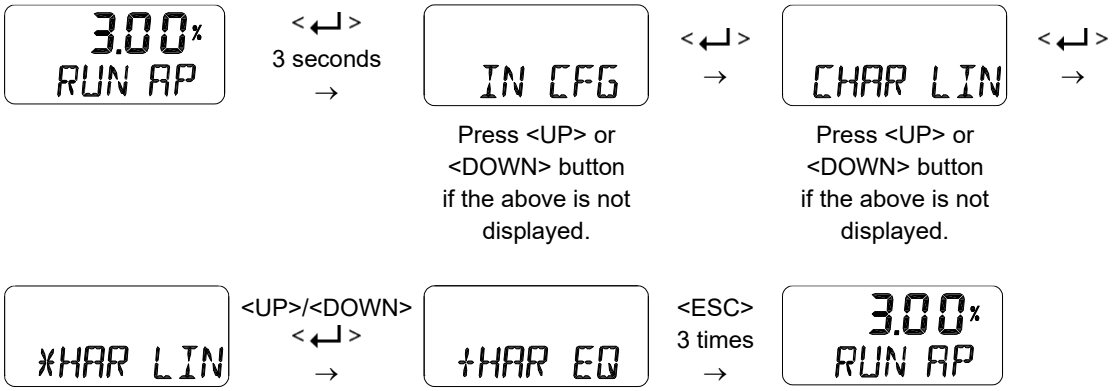

8.9.6 User Set Characterization 5 Points (U5)

A total of 5 target positions are set every 4 mA intervals. When shipped from the factory, the initial positions are P0 (4 mA, 0 %), P1 (8 mA, 25 %), P2 (12 mA, 50 %), P3 (16 mA, 75 %), and P4 (20 mA, 100 %). User can change all 5 points or only change partially and exit the menu by pressing <ESC> button.

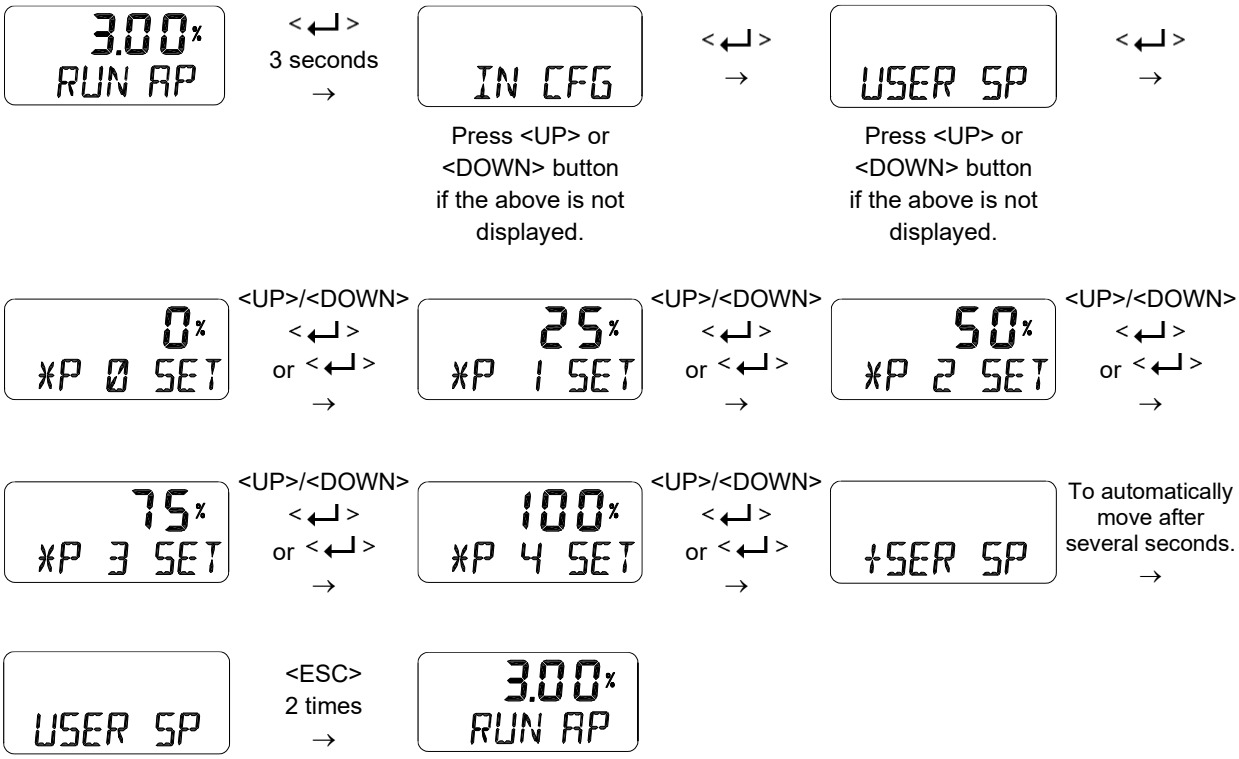

This function is activated by saving the Valve Flow Characterization Curves (CHAR) of above Section 8.9.5 as “U5”.

8.9.7 User Set Characterization 21 Points (U21)

A total of 21 target points can be set every 0.8 mA intervals. When shipped from the factory, the initial P0 (4 mA, 0 %), P1 (4.8 mA, 5 %), P2 (5.6 mA 10 %), - - -, P19 (19.2 mA, 95 %), and P20 (20 mA, 100 %). For example, a characteristic curve below can be made through the settings of P1 to P20. User can change all 21 points or only change partially and exit the menu by pressing <ESC> button.

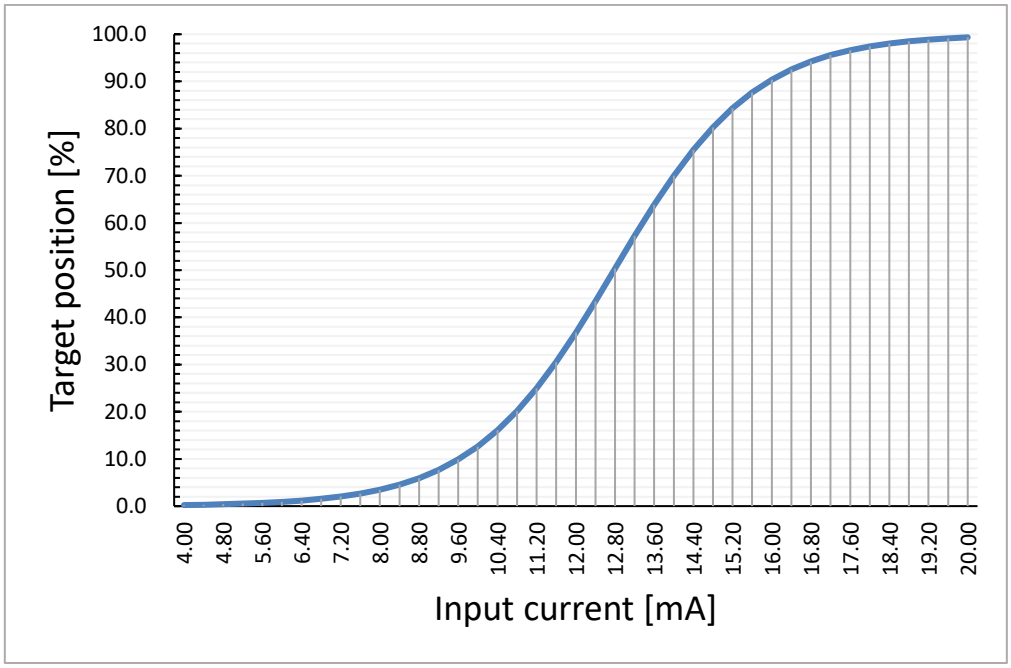

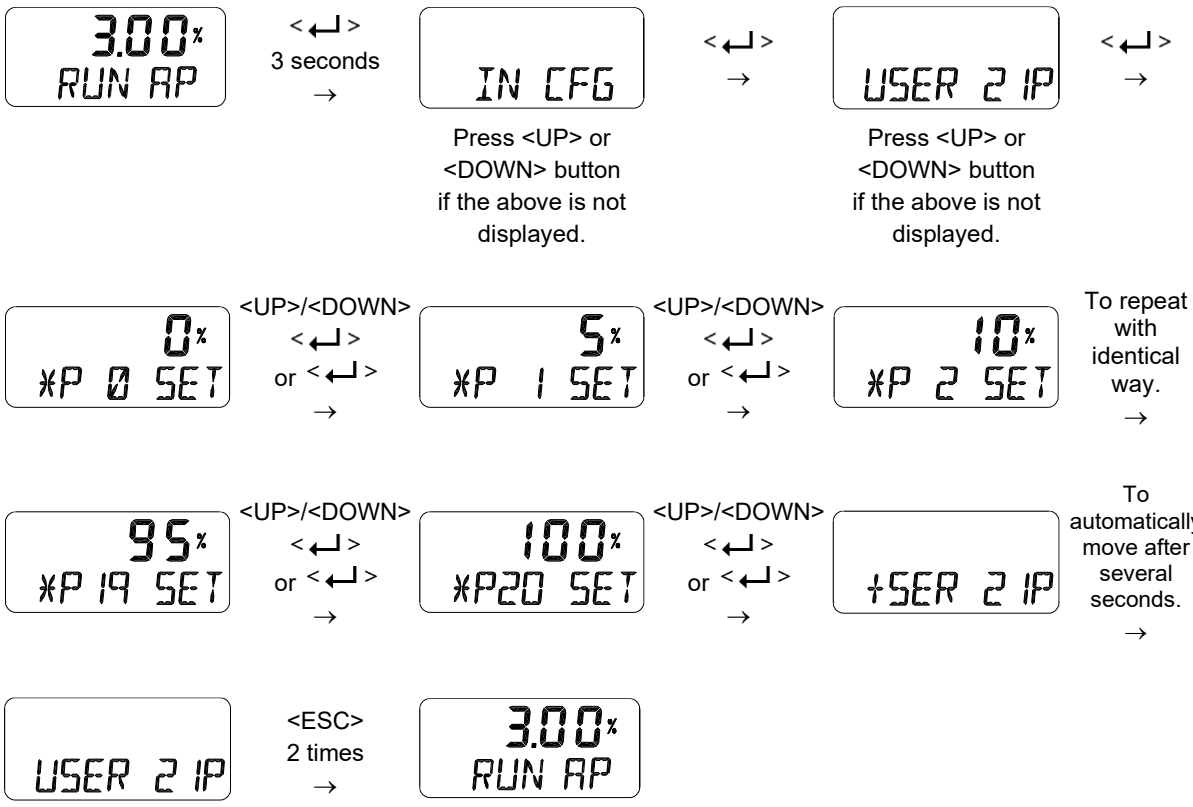

This function is activated by saving the Valve Flow Characterization Curves (CHAR) of above Section 8.9.5 as “U21”.

8.9.8 Tight Shut Open (TSHUT OP)

It is used to ensure that the valve is fully opened with a large force. When the input signal SP is greater than the value set in the TSHUT OP, all available force is applied to OUT 1 port to tightly open the valve. If the input current of 4 mA is 0% of valve position and 20 mA is 100% of valve position, and the Tight Shut Open value is set to any position less than 100 % (e.g. 95 %), then the valve stroke will be 100 % immediately when the input signal is over the set value (e.g. 95 %). A full supply pressure applied to the actuator via the OUT1 port prevents leakage of the valve by shutting the valve tightly. However, when the value is set to 100 %, Tight Shut Open function doesn't work.

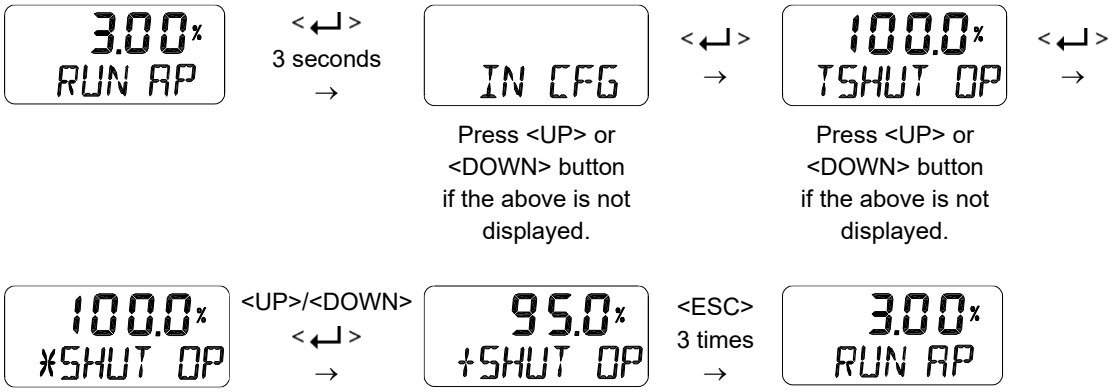

8.9.9 Tight Shut Close (TSHUT CL)

It is used to ensure that the valve is fully closed with a large force. When the input signal SP is smaller than the value set in the TSHUT CL, air pressure is vented through OUT 1 port to tightly close the valve. If the input current of 4 mA is 0 % of valve position and 20 mA is 100 % of valve position, and the Tight Shut Close value is set to any position larger than 0 % (e.g. 5 %), then the valve stroke will be 0 % immediately when the input signal goes below the set value (e.g. 5 %). The air venting from the actuator via the OUT1 port prevents leakage of the valve by shutting the valve tightly. However, when the value is set to 0 %, Tight Shut Close function doesn't work.

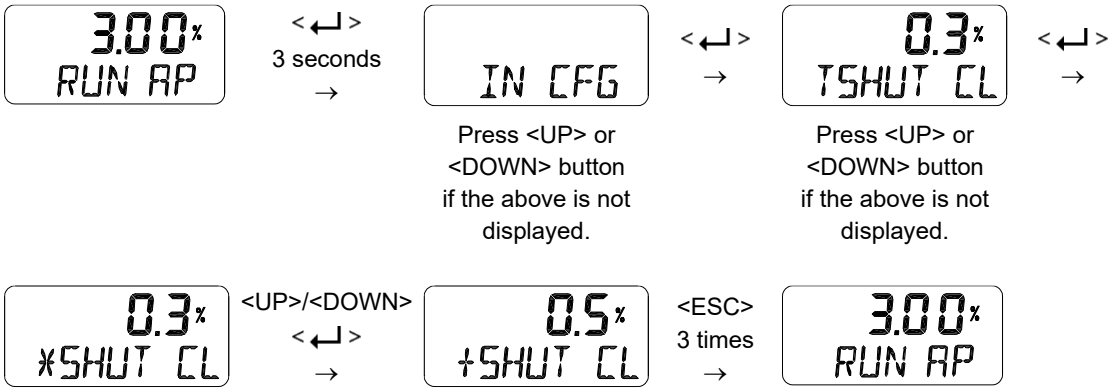

The following graph shows the operation of the valve stroke when the input signal corresponding to Tight Shut Open or Tight Shut Close is applied to the device.

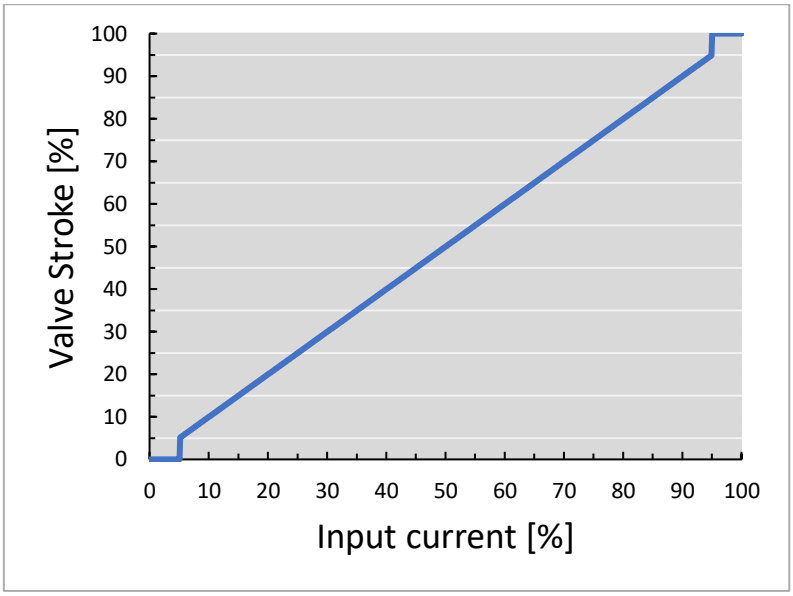

8.10 Output Configuration (OUT CFG)

Followings are the values changeable at the Output Configuration Mode.

1) 4-20 mA Analog Output Direction (PTM NORM / REVS)
2) 4-20 mA Analog Output Zero / End (PTM ZERO / ENd)
3) HART Feedback Direction (HT NORM / REVS)
4) Back Calculation (bACKCAL oFF / on)
5) Analog Output Function [AOF oFF / …]
6) Analog Output Logic [AO LOGIC Lo / HI]

8.10.1 4-20 mA Analog Output Direction (PTM NORM / REVS)

The 4-20 mA analog output signal from the positioner can be changed to normal (NORM) or reverse (REVS), which means they are the same or reversed direction as the actual position.

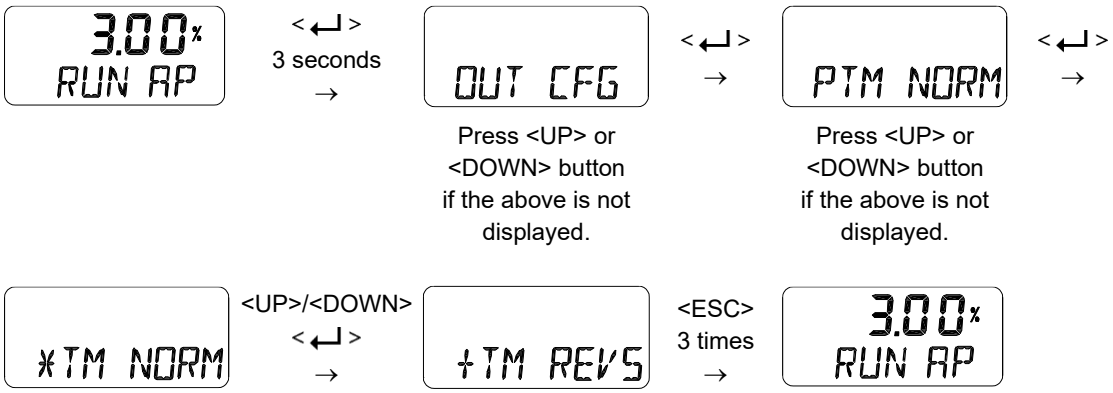

8.10.2 4-20 mA Analog Output Zero / End (PTM ZERO / ENd)

ZERO adjusts the zero point of the Analog Output (4 mA output), and ENd adjusts the end point of the Analog Output (20 mA output). This is used when the analog output signal needs to be feedbacked differently than the actual position of the valve, or to be adjusted a little. A measuring instrument such as an ampere meter is needed to view the analog output signal, and it should be connected as shown below.

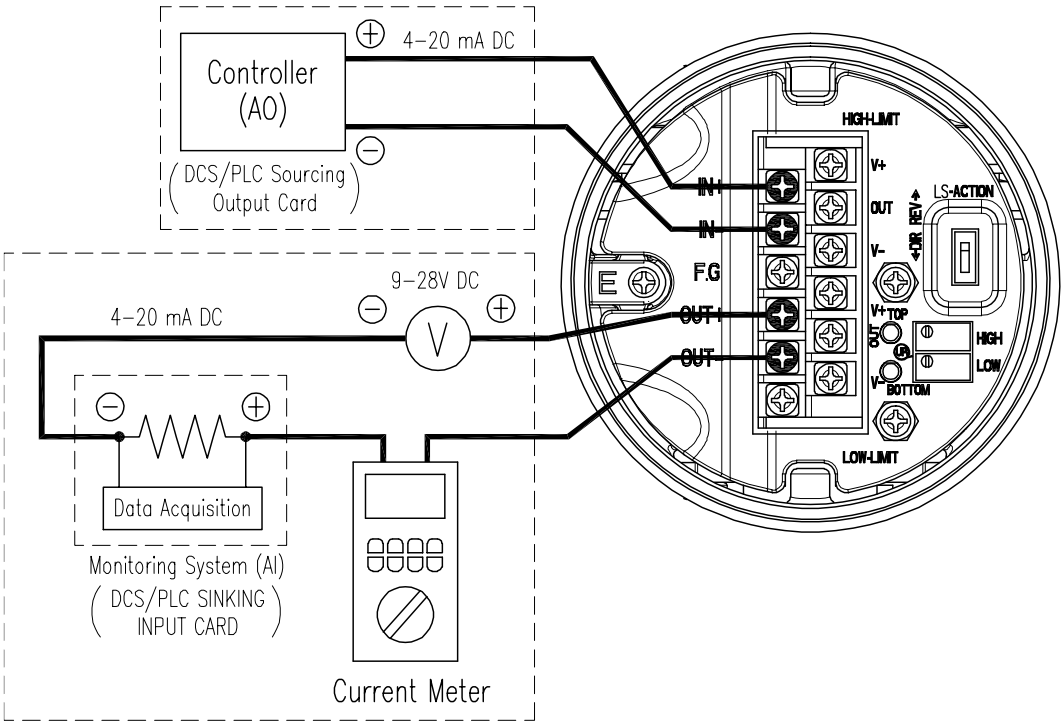

Fig. 8-4: Setting 4-20 mA Analog Output

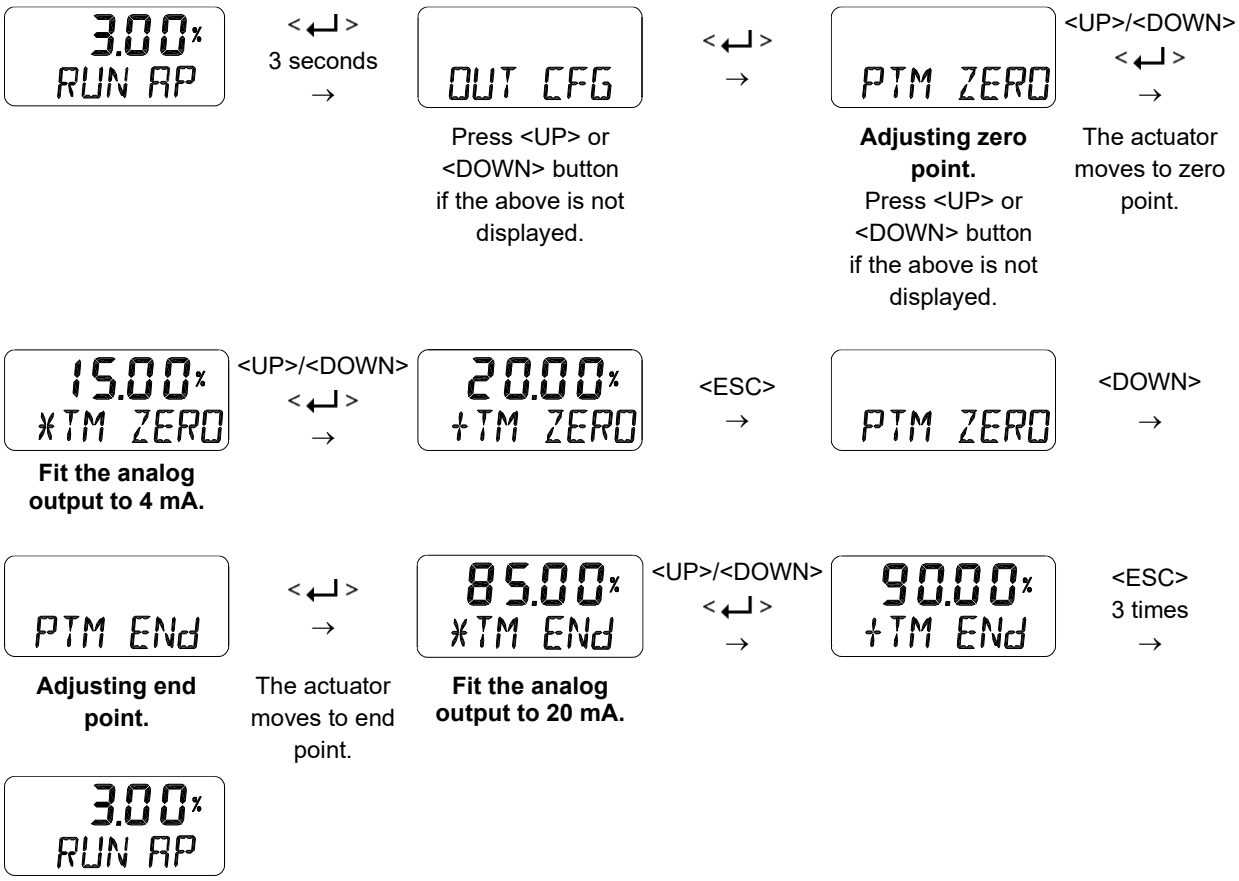

8.10.3 HART Feedback Direction (HT NORM / REVS)

The feedback signal from the HART communication output of the positioner can be output in the same direction or the reversed direction as the actual position of the valve. NORM or REVS is selected.

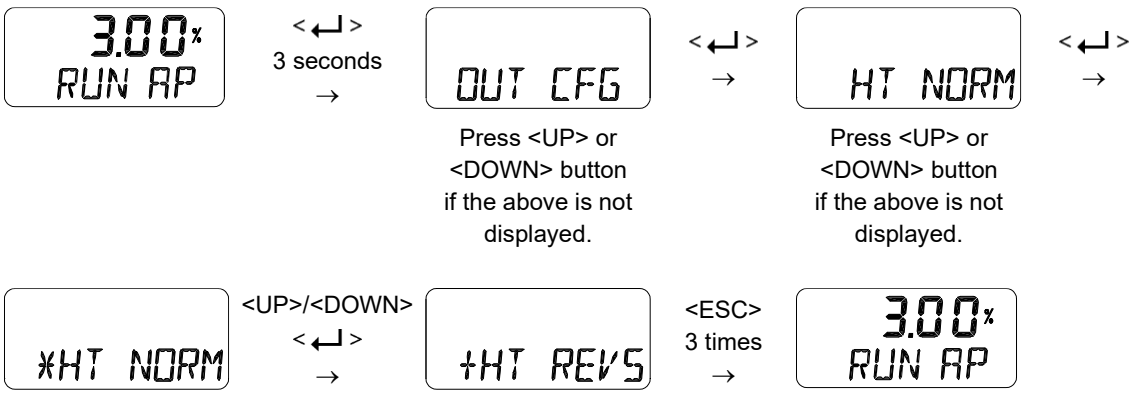

8.10.4 Back Calculation (bACKCAL oFF / on)

This function recalculates the output "RUN AP" value changed by the flow characteristics setting mode to display it linearly proportional to actual input current. For example, if the flow characteristic mode is set from "LIN" to "EQ", when an input current value of 8 mA (25 %) is applied, the target position is changed to 6.25 % and "RUN AP" is displayed as 6.25 % after the move. If you change the bACKCAL from OFF to ON, the "RUN AP" is displayed as 25 %.

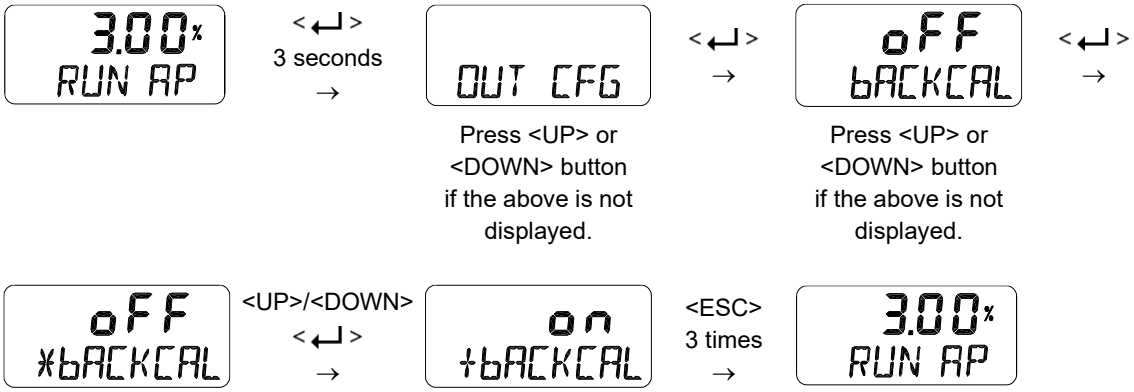

8.10.5 Analog Output Function [AOF oFF / …]

This is used to output a specific alarm(NAMUR NE43) through the analog output port when triggered. If one of the alarms below occurs, it can be configured so that the analog output is activated. Assign any alarm to one of the four NE107 signals to activate an analog output signal required for any of the listed alarms. The initial factory setting is OFF. Analog output current is selected as 3.6 mA or 21.0 mA by Analog Output Logic (AO LOGIC).

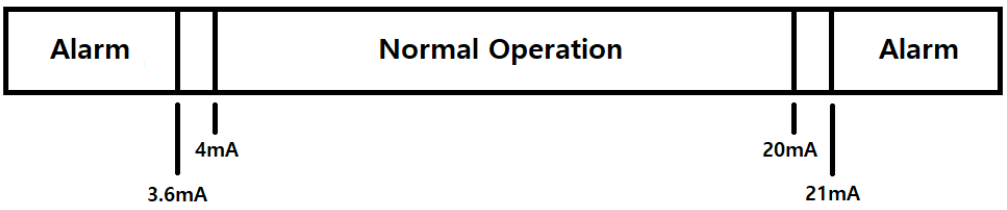

< NAMUR NE43 >

Alarm name to be assigned to digital out port	Abbreviation on LCD	Activated by analog out signal
OFF	OFF	Not activated when alarm occurs.
Travel High Limit	TVLH	When the valve position exceeds the Travel High Limit towards the 100 % position.
Travel Low Limit	TVLL	When the valve position is lower than Travel Low Limit towards the 0 % position.
Deviation Timeout	dVTO	When actual deviation greater than the preset Deviation persists longer than the preset Deviation Time.

Loop Current Low	LPCL	When Loop input current is below 3.8 mA
Failure	FAIL	When the events classified as Failure in NE107 signals occur.
Functional Check	FUNC	When the events classified as Functional Check in NE107 signals occur.
Out of Specification	OUTS	When the events classified as Out of Specification in NE107 signals occur.
Maintenance required	MNTR	When the events classified as Maintenance Required in NE107 signals occur.

You can check the contents of the most recent alarms in 8.12.5 View Event Log (EVT LOG).

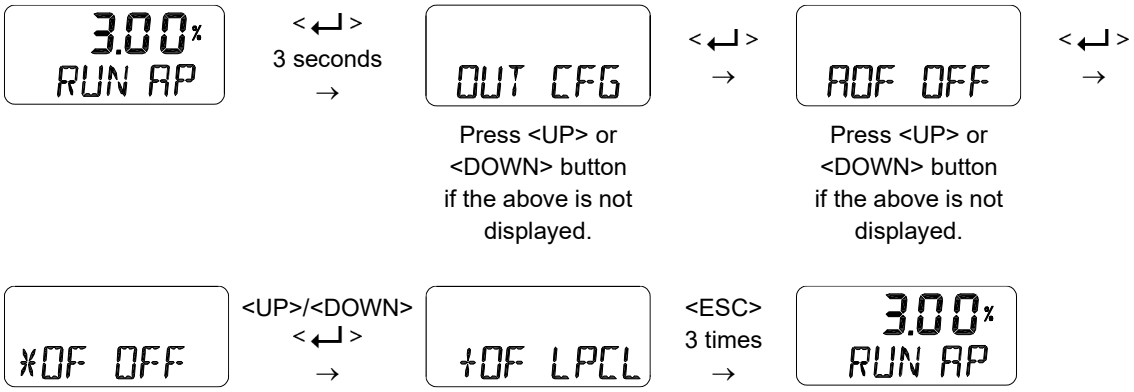

8.10.6 Analog Output Logic [AO LOGIC Lo / HI]

Set the logic for activating the analog output when an alarm occurs to High (HI) or Low (Lo). The factory default is set to Lo. That is, when an external voltage is applied to the analog output port, 3.6 mA will flow to the output. When the analog output logic is set to HI, 21.0 mA will flow.

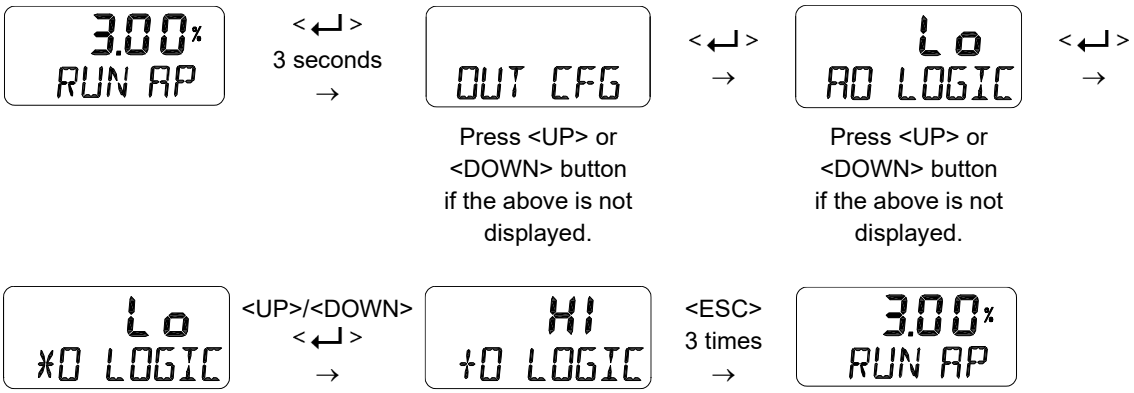

8.11 Device Configuration (dEV CFG)

Followings are the values changeable at the dEV CFG Mode.

1) Action Setting (ACT REVS / dIR)
2) Linear Interpolation (ITP oFF / on)
3) Lock of Parameters (Write Protect, W UNLOCK / LOCK)
4) Actual Position View Mode (View Mode, VI NORM / REVS)
5) Polling address setting (POL AddR 0 to 63)
6) Factory Reset (dEFAULT oFF / on)
7) Positioner Self-Test (SELFTEST)

8.11.1 Action Setting (ACT REVS / dIR)

Reverse Action (REVS) or Direct Action (dIR) are automatically set by performing “AUTO 2” within the Auto Calibration function. However, this function is used when the user requires to change ACT REVS or ACT dIR to other action. Changing the action from Reverse Action (REVS) to Direct Action (dIR) or Direct Action (dIR) to Reverse Action (REVS) will also change the Signal Direction (SIG), Position Transmitter Direction (PTM), HART Feedback Direction (HT) and View Mode (VI).

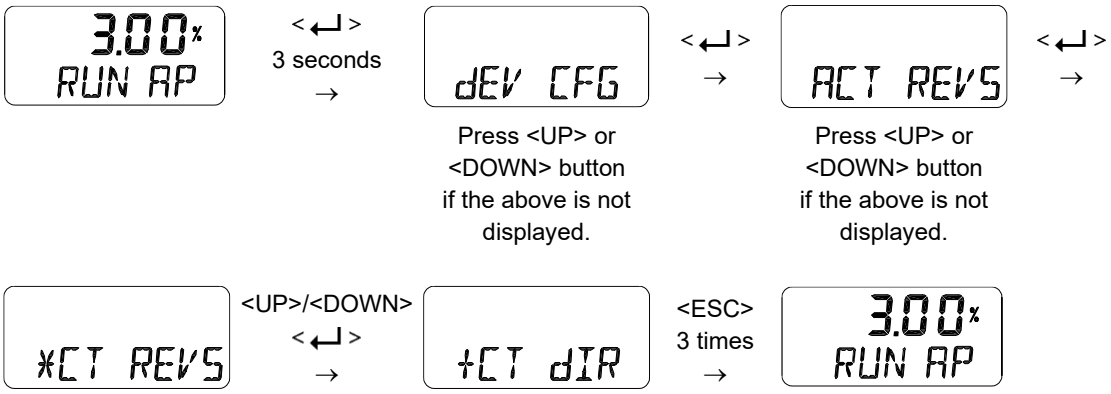

8.11.2 Linear Interpolation (ITP oFF / on)

ITP is used to compensate the linear motion of the actuator into rotary motion of the feedback lever. Following Auto Calibration, the ITP mode is set automatically to “on” when the angle range of the feedback lever is greater than 20 °, but it is set to oFF when this angle is less than 20 ° or rotary positioner is used.

The settings below are the process of manually changing the “ITP oFF” to the “ITP on”.

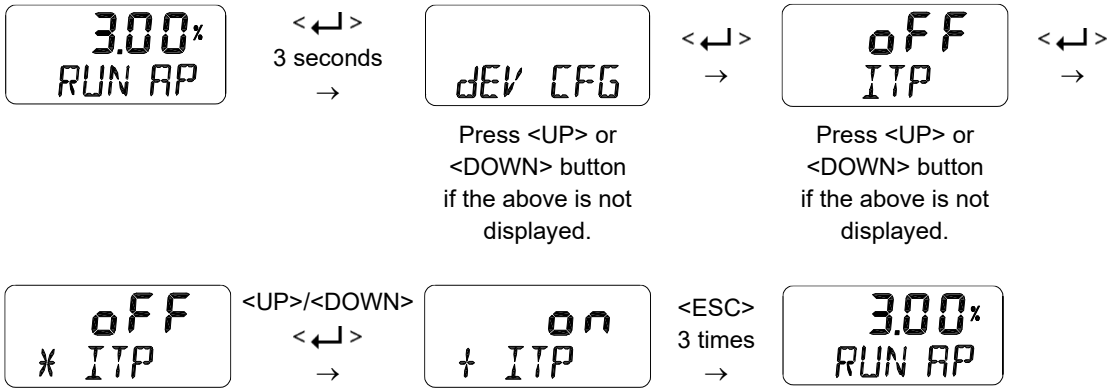

8.11.3 Lock of Parameters (Write Protect, W UNLOCK / LOCK)

This function is used to set (LOCK) or disable (UNLOCK) the lock for the parameters. Used to prevent the stored parameters from being changed.

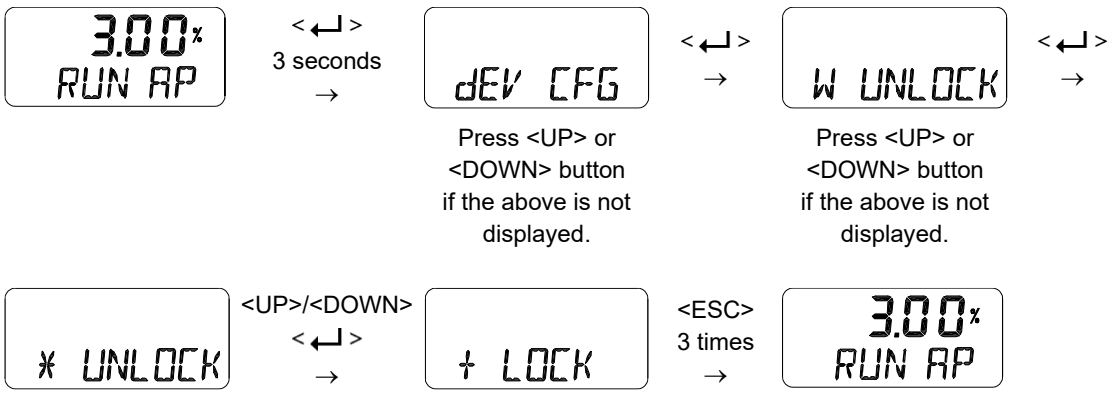

8.11.4 Actual Position View Mode (View Mode, VI NORM / REVS)

This function is used to set the "RUN AP" value on the LCD to be displayed as direct (NORM) or reversely (REVS) as the actual position of the valve.

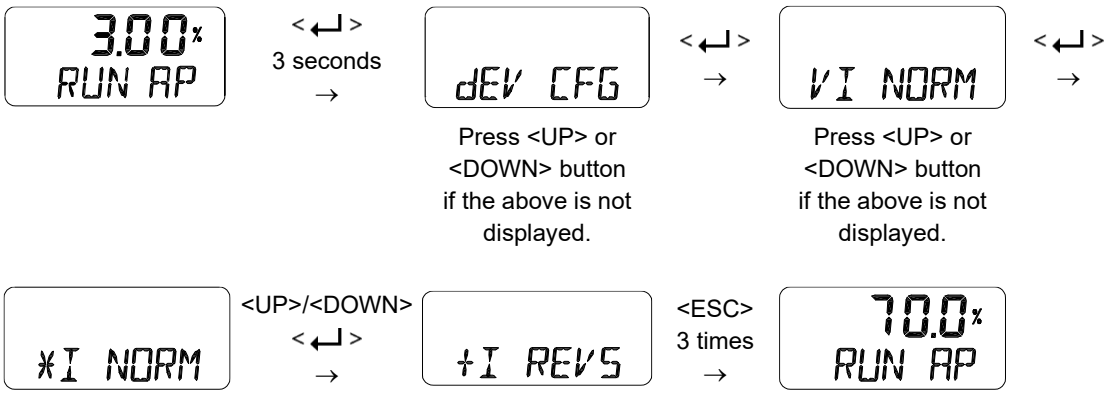

8.11.5 Polling address setting (POL AddR)

This function is used to set the address value of the positioner on HART(Highway Addressable Remote Transducer) communication. The value from 0 to 63 could be set and default is 0.

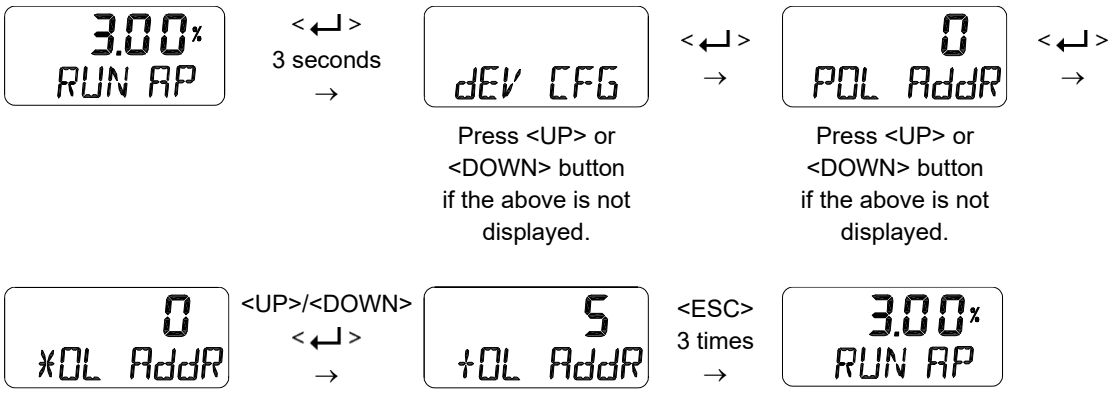

8.11.6 Factory Reset (dEFAULT oFF / on)

This function initializes all parameters stored in the positioner to initial factory setting. In the dEFAULT mode, press the Enter button to enables ON/OFF setting and then pressing Enter button for approximately 3 seconds changes the dEFAULT mode from oFF to “on". Additional pressing of Enter button resets all parameters to initial factory state.

Pay attention when using this mode as all the parameter values will be changed to the factory settings.

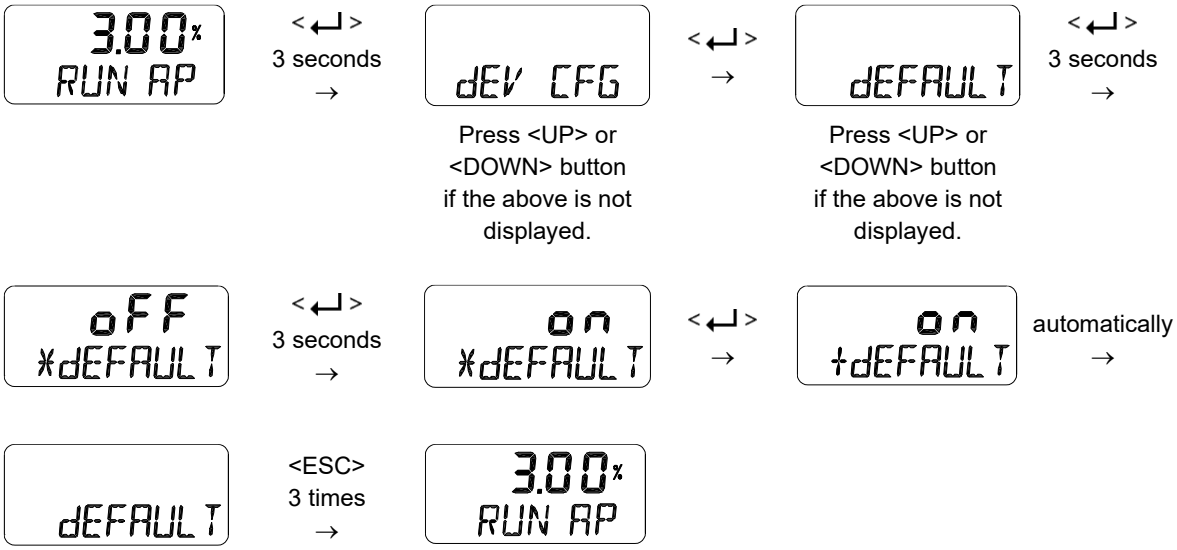

8.11.7 Positioner Self-Test (SELFTEST)

This function is used to diagnose the operation of the memory (RAM or NVM) inside the positioner. If no error is found during SELFTEST, the SELFTEST menu is displayed after FINISH is displayed, and if abnormalities are detected, the message "SEt / NVMW" is displayed.

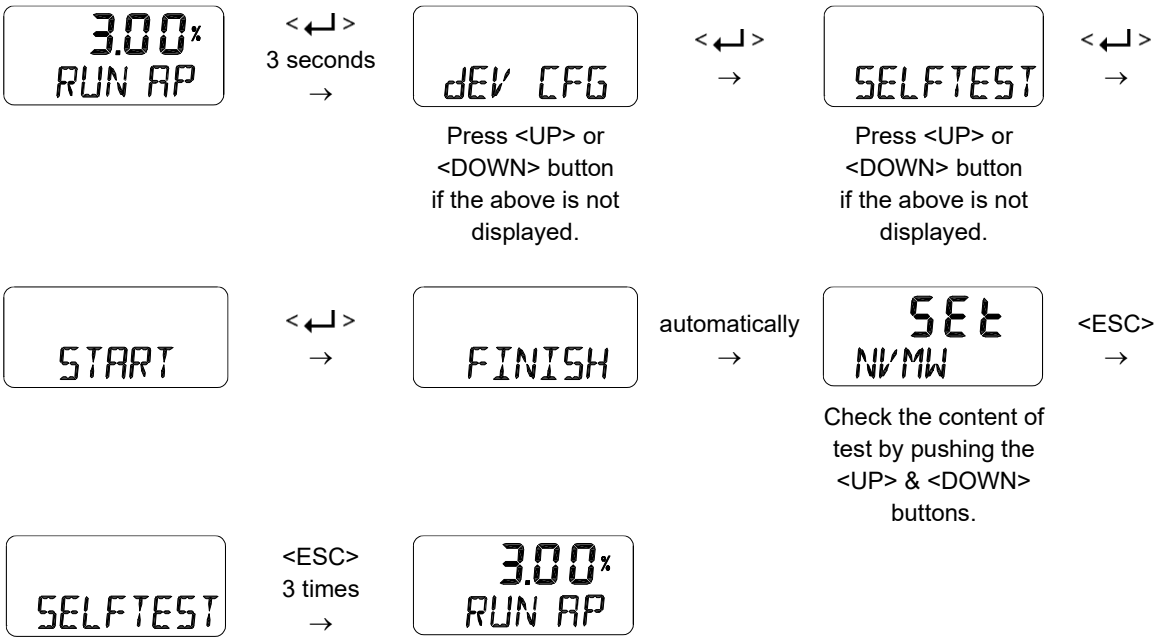

Diagnostic message



If the abbreviation displayed at the top line is “Set”, it means the event has been created, and if it is “CLr”, the message has been cleared. NVMW at the bottom is an alarm message that has occurred. See "8.15 Status and Alarm Code" for alarm details.

8.12 Diagnosis Mode (dIAGNd)

Followings are the values changeable at the dIAGNO Mode.

1) Default Alarm Settings
2) View Monitoring Counts (VI CNTS)
3) Diagnostic Limit Configuration (LIMT CFG)
4) Reset Alarm Status (RST ALRM)
5) View Event Log (EVT LOG)

8.12.1 Default Alarm Settings

The table below shows the factory default values to handle the status of the positioner or the related process conditions.
Each status or alarm is preset to one of Failure, Out of Specification, Maintenance Required, or Functional Check when shipped from the factory, and the corresponding NE107 symbol is displayed when the preset alarm or condition occurs. This setting cannot be reconfigured by the user. As shown in the table below, Auto Calibration Running, Critical NVM Fail, Non-Critical NVM Fail, PST Fail, and Auto Calibration Fail can be reset manually without removing the cause. The two alarms below can be activated using the LCD screen and buttons without DD or DTM intervention.

- Travel High Limit, Travel Low Limit, Deviation Timeout

Note 1. Users cannot reassign alarm signals to NE107 signals.

Status / Alarm	Default setting	Default NE107 signal	Resettable manually when alarm occurred?
Travel High Limit	Disable	Out of Specification	No
Travel Low Limit	Disable	Out of Specification	No
Deviation Timeout	***Enable***	Out of Specification	No
Travel Cutoff High Limit	***Enable***	Out of Specification	No
Travel Cutoff Low Limit	***Enable***	Out of Specification	No
Local Operation Active	***Enable***	Functional Check	No
Auto Calibration Running	***Enable***	Functional Check	Yes
Position Sensor High Limit	***Enable***	Out of Specification	No
Position Sensor Low Limit	***Enable***	Out of Specification	No
Critical NVM Fail	***Enable***	Failure	Yes
Non Critical NVM Fail	***Enable***	Failure	Yes
Not Calibrated	***Enable***	Maintenance Required	No
Position Sensor Fail	***Enable***	Failure	No
Auto Calibration Fail	***Enable***	Maintenance Required	Yes
Loop Current Low Limit	***Enable***	Failure	No

8.12.2 View Monitoring Counts (VI CNTS)

It is used to just view the accumulated data information for valve movement up to now.

Counter Name	Abbreviation [unit]	Function
Cycle Count	CYCL CNT	The accumulated number of times the valve has changed its direction. It is accumulated only when the valve change direction while Cycle Count Deadband is exceeded.
Travel Accumulator	TVL ACUM [%]	The total valve travel accumulated whenever Travel Accumulator Deadband is exceeded.
Fully Open Count	FOP CNT	The accumulated number of times the valve has been fully open.
Fully Closed Count	FCL CNT	The accumulated number of times the valve has been fully closed.
Over Current Count	OVER CNT	Accumulates the number of times the input current exceeds 24 mA.
Piezo0 Count	PIEZO 0	Accumulates the number of Piezo 0 operations inside the pilot.
Piezo1 Count	PIEZO 1`	Accumulates the number of operations of Piezo 1 inside the pilot.

Each of the five counters in the table above can have an upper limit set, and an alarm can be generated when the accumulated counter value exceeds this upper limit. Alarm Enable or Alarm Disable setting for each alarm is only possible via HART communication.

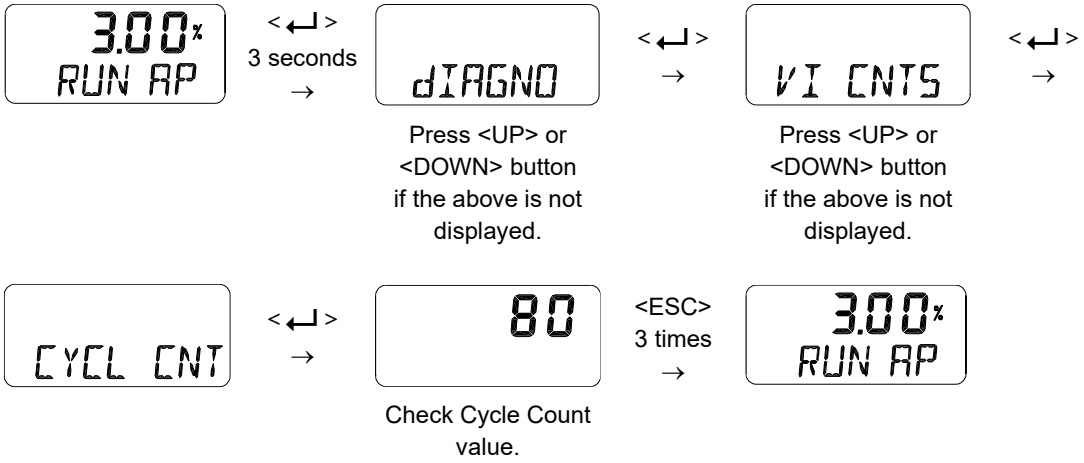

8.12.3 Diagnostic Limit Configuration (LIMT CFG)

This setting sets the upper or lower limit for the items in the table below that can trigger an alarm. Even if this condition is met, an alarm will not be triggered unless Enable is set for each alarm as shown in the table below.

Upper / Lower Limit or Enable	Abbreviation [unit]	Description
Travel High Limit	TVL HI [%]	Alarm is triggered if the valve stroke exceeds TVL HI. The initial factory setting is 100%.
Travel Low Limit	TVL LO [%]	Alarm is triggered if the valve stork is lower than TVL LO. The initial factory setting is 0 %.
Deviation Time	dV TIME [sec]	If RUN dV (deviation) is greater than dV db and lasts longer than dV TIME, a Deviation Timeout alarm occurs. The initial value is 60 sec, 5%.
Deviation Deadband	dV db [%]	
Travel High Limit Alarm Enable	AL TVLH	These are used to set "on" or "oFF" for each alarm. When set to oFF, the alarm does not occur even if the conditions are met. All the initial factory settings are oFF.
Travel Low Limit Alarm Enable	AL TVLL	
Deviation Timeout Alarm Enable	AL dVTO	

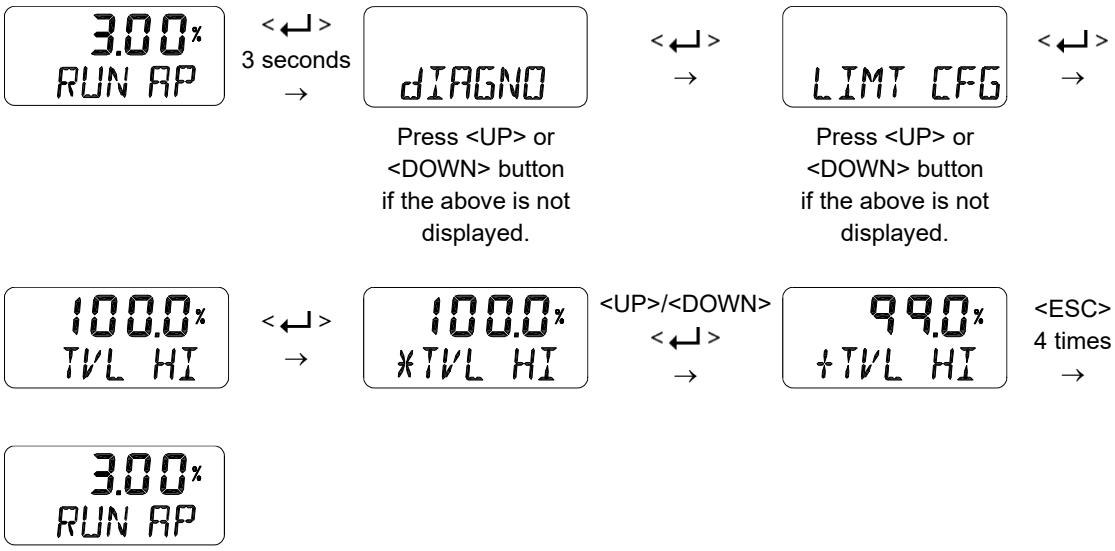

8.12.4 Reset Alarm Status (RST ALRM oFF / on)

The alarm is automatically cleared when the cause of the alarm disappears. For example, if the input current signal of the input terminal is detected to be less than 3.8mA (Loop Current Low Limit) and an alarm occurs, the alarm is automatically cleared when the input current signal rises above 3.8mA. However, if the auto-calibration fails and an alarm is displayed, use this function to clear the alarm.
Below is an alarm list that can be released using the RST ALRM function.

1) Auto Calibration Running
2) Critical NVM Fail
3) Non-Critical NVM Fail
4) Auto Calibration Fail

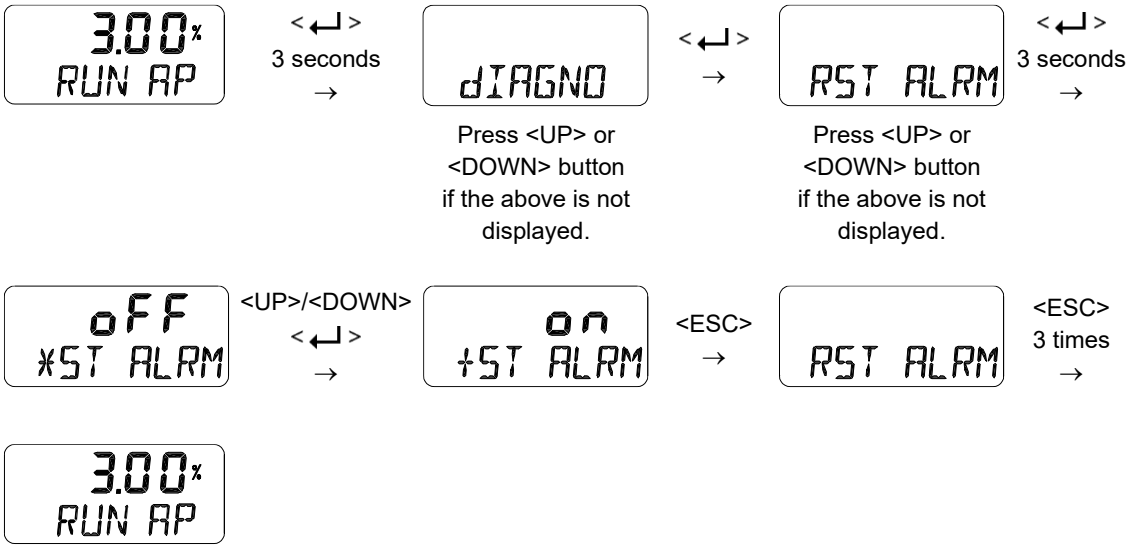

8.12.5 View Event Log (EVT LOG)

This is used to show the 20 most recent events that occurred in operation. Record 0 is the most recent of the 20 events and Record 19 is the oldest event. The event detail shows the time when the event occurred (EVT TIME) as well as the content of the event (EVT INFO). See 8.15 Status and Alarm Codes for an abbreviation and description of the event details.

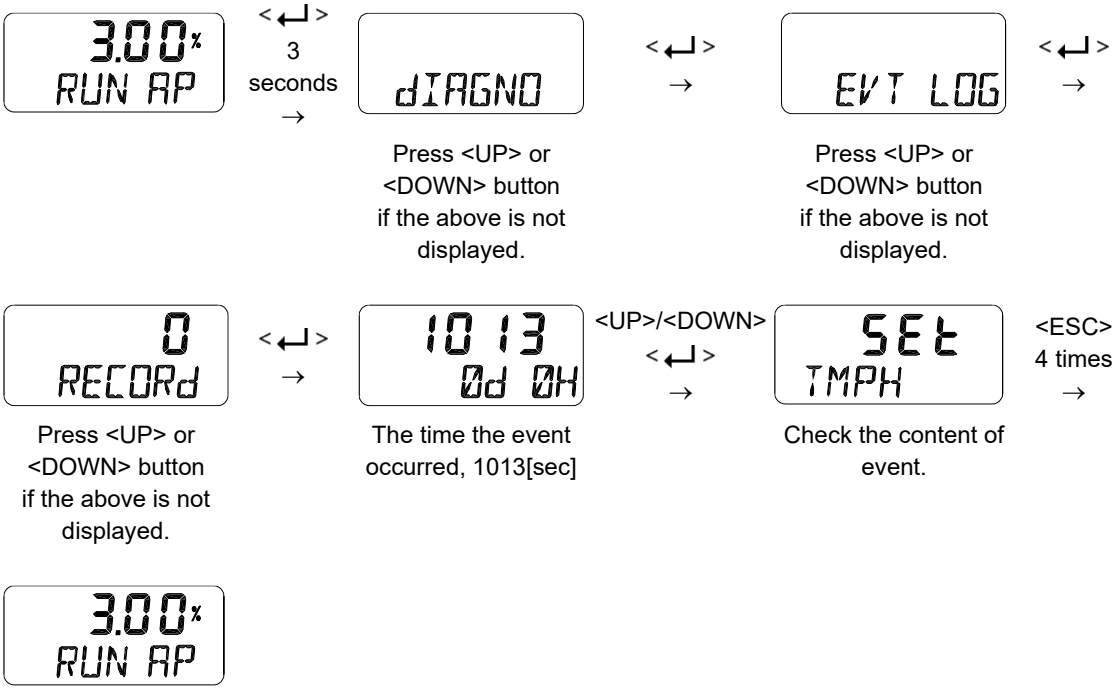

Event Message Description



The “SEt on the upper section of screen shows that a specific event has occurred, while the “CLr” means that the event has been removed. The “TMPH” displayed on the bottom section indicates an abbreviation for the alarm.

8.13 Position information (INFO)

The diverse Positioner information is provided in the INFO Mode.

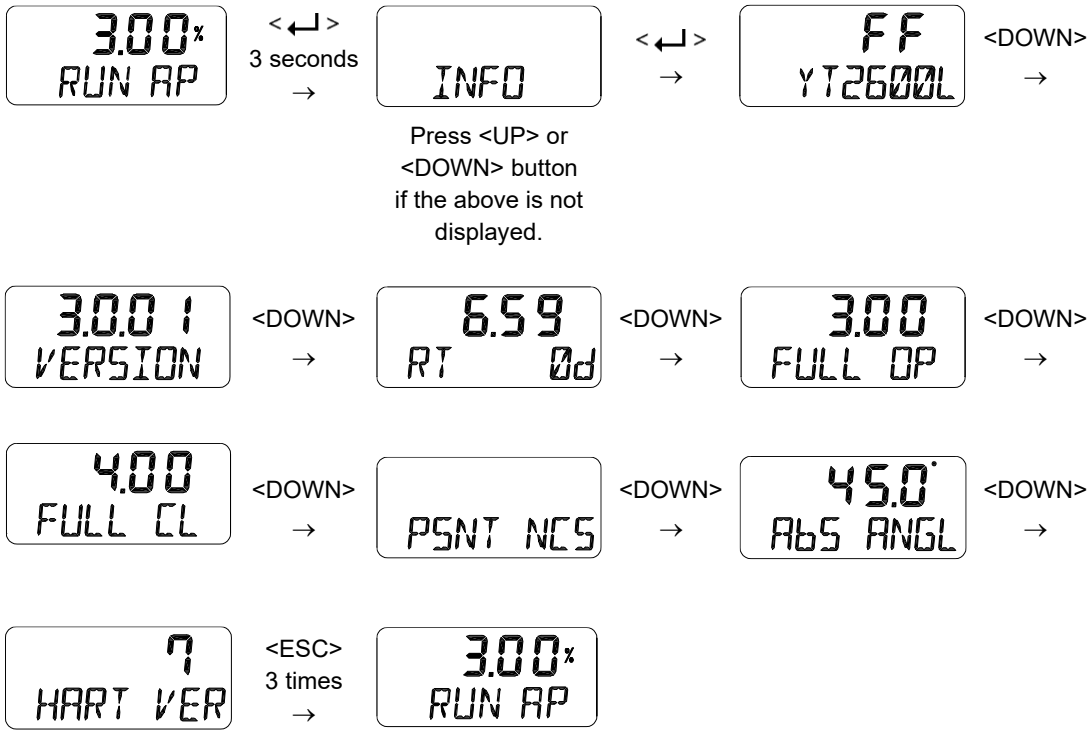

LCD display	Description
YT2600L	Model Name
3.0.01 **SOFT VER** **/** **2025JL01**	Software Version [SOFT VER] “3.0.01” Software Input date : “2025-07(JL)-01” (January JA, February FB, March MR, April AR, May MY, June JN, July JL, August AG, September SP, October OT, November NV, December DC) At SOFT VER status if < ↵ > button is pressed, the date will be displayed and then if < ↵ > button is pressed again, SOFT VER is displayed again.
4.18 **RT 0d**	Run Time [RT] Total usage time of the product Upper “4.18” indicates 4 hours and 18 minutes. Lower “0d” indicates days used. Interval to store time is one hour.
3.12 **FULL OP**	Upward Full Stroke Time [FULL OP] This value is stored automatically after executing AUTO 2 / 3 calibration, and indicates the time in seconds it takes for the valve to fully open from fully closed.
2.97 **FULL CL**	Downward Full Stroke Time [FULL CL] This value is stored automatically after executing AUTO 2 / 3 calibration, and indicates the time in seconds it takes for the valve to fully closed from fully open.
PSNT PTN	Position Sensor Type [PSNT] Potentiometer [PTN]
AbS ANGL	Absolute Position in Angle [ABS ANGL].
HART VER	HART Protocol Revision [HART VER]

8.14 Error codes during automatic calibration

The error detected during the automatic calibration is displayed on LCD especially when the positioner may become out of control, may malfunction or may become poor in precision. Once it is detected, the auto calibration is aborted.

Error code		Error content and cause	Action
CHK AIR	-7	• Indicated when the valve is not moving in “Full Open” direction during auto calibration.	• Check if pneumatic pressure is being supplied normally to the positioner.
	-9	• Indicated when the valve is not moving in “Full Close” direction during auto calibration.	
	-13	• Indicated when abnormal movement is detected during the operation to set the PT parameters of the positioner	• Check for leakage from output port of the positioner and related to piping line.
	-15	• Indicated when abnormal movement is detected during the operation to set the deadband of the positioner.	
	-24	• Indicated when movement is detected in a valve that is stopped at a specific position during auto calibration.	
	-25	• Indicated when abnormal movement is detected during the operation to set the ESR parameters of the positioner.	
CHK LINK	-8	• Indicated when the movable range of the Feedback lever is too narrow(below 10°).	• Linear : Check if the feedback lever is properly installed. Move and re-install the positioner to stem of actuator in order to make the angle use of the feedback lever larger than current use angle. • Rotary: Check if the main shaft of the positioner is properly installed. In the case of Namur, the horizontal straight part of the main shaft of the positioner must be well inserted into the slotted groove of the actuator stem.

8.15 Status and Alarm Code

Refer to the table below to check the status and alarm codes that can be displayed on LCD screen or HART monitor, and then take the appropriate action.

Note 1. Any status or alarms assigned to one of NE107 signals at factory is not newly assignable.

Alarm Code	Abbreviation	Status / Alarm name	Description or proposed actions
0	LOPA	Local Operating Active	It indicates the positioner is being operated by manual operation.
1	CALR	Auto Calibration Running	It is active when auto-calibration is in progress.
4	PSNH	Position Sensor Hi Limit	Position sensor is out of range. Check the installed state if it happened during operation.
5	PSNL	Position Sensor Lo Limit	
6	NVMF	Critical NVM Defect	There is a problem with the non-volatile memory of the main board. Please initialize the product using the Default function and then run AUTO2. If the same problem occurs after AUTO2 operation, contact the place of purchase and replace the circuit board.
7	NVMW	Non-Critical NVM Defect	
13	TVLH	Travel Hi Limit	It is active when the travel exceeds Travel Hi Limit.
14	TVLL	Travel Lo Limit	It is active when the travel falls below Travel Lo Limit.
15	dVTO	Deviation Time Out	It lasts more than 60 seconds with the deviation between the target location and the actual location out of 5%. The deviation time 60 seconds and the deviation 5% are not changeable but fixed. Check if there is no problem with the friction of valve/actuator, pneumatic leaks, insufficient supply pressure.
23	TVCH	Travel Cutoff Hi Limit	It is active when the travel exceeds the available high stroke of the valve/actuator. The available stroke is already set during auto calibration. The event is not created when Tight Shut Open is used. Aging of the valve / actuator assembly or problem in the positioner sensor.
24	TVCL	Travel Cutoff Lo Limit	It is active when the travel is below the available low stroke of the valve/actuator. The available stroke is already set during auto calibration process. The event is not created when Tight Shut Close is used. Aging of the valve / actuator assembly or problem in the positioner sensor.
28	NCAL	Not Calibrated	It is active when auto-calibration has not done after installation. Perform AUTO 2 calibration after checking if the installed state is good.

Alarm Code	Abbreviation	Status / Alarm name	Description or proposed actions
29	CALF	Auto Calibration Failure	It is active when auto-calibration has failed. Retry auto-calibration after checking if there is no problem with installed state such pneumatic leaks, lever position and others.
37	LPCL	Loop Current Lo Limit	It is active if the input current falls below 3.8 mA.
144	MNTR	Maintenance Required	It is active when more than one of alarms assigned to “Maintenance Required” have happened. Remove the cause of the alarm after checking it.
147	FAIL	Failure	It is active when more than one of alarms assigned to “Failure” have happened. Remove the cause of the alarm after checking it.
148	OUTS	Out of Specification	It is active when more than one of alarms assigned to “Out of Specification” have happened. Remove the cause of the alarm after checking it.
149	FUNC	Function Check	It is active when more than one of alarms assigned to “Functional Check” have happened. Remove the cause of the alarm after checking it.
-	OVER CUR	Over Current	The input current exceeds 24mA.

10 Main Software Map

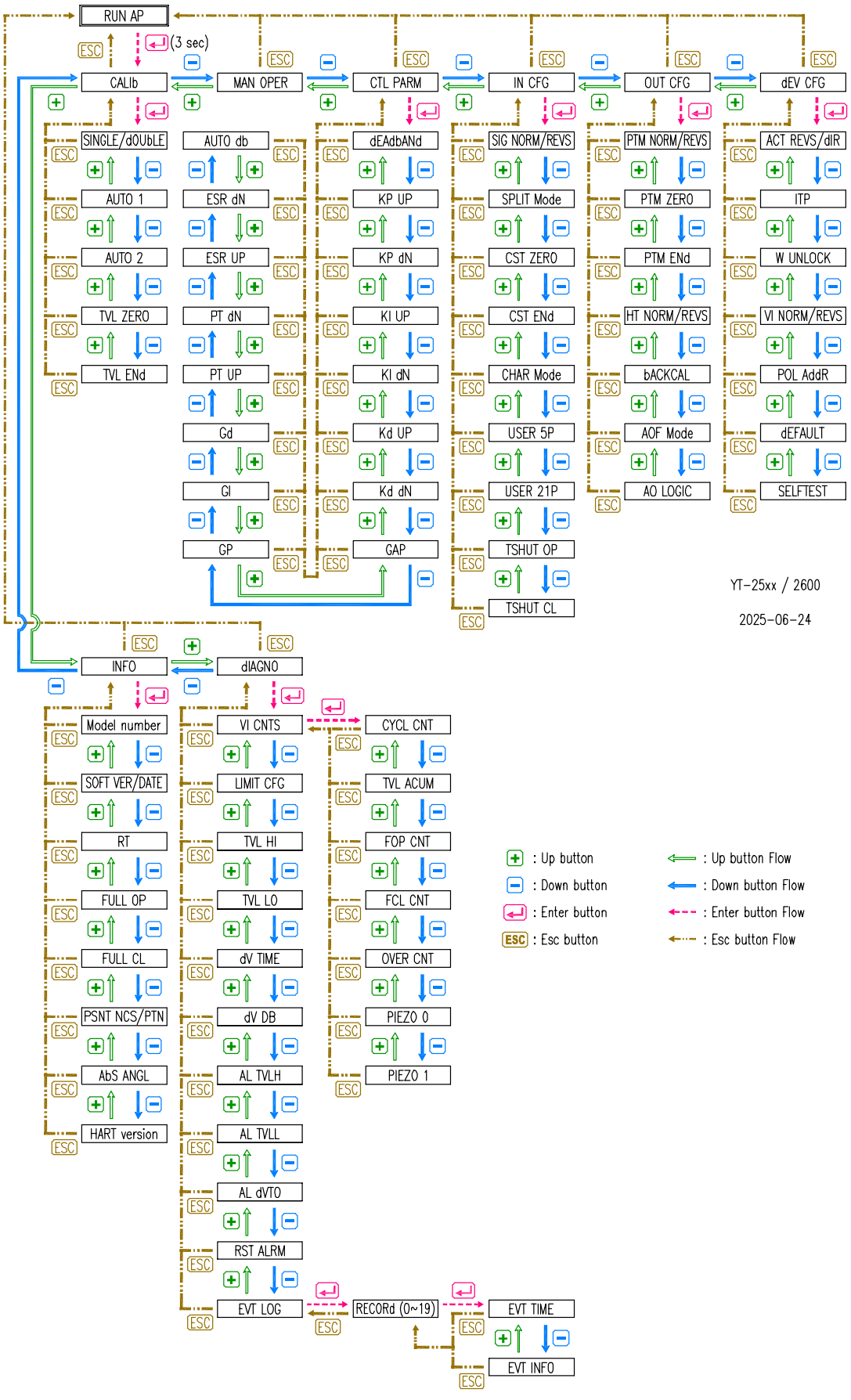

rotork®

Contact us now

mail@rotork.com
www.rotork.com

PUB126-133-00
Issue 05/26