rotork®

Keeping the World Flowing
for Future Generations



YT-1000 / 1050 Series

Electro-Pneumatic Positioner

Product manual

Contents

1 Introduction 5
1.1 General Information for the users 5
1.2 Manufacturer Warranty 5
1.3 Explosion Proof Warning (Only for explosion proof type positioners) 6
2 Product Description 7
2.1 General 7
2.2 Main Features and Functions 7
2.3 Label Description 8
2.4 Product Code 15
2.4.1 YT-1000 Linear series follows suffix symbols as follows. 15
2.4.2 YT-1000 Rotary series follows suffix symbols as follows. 16
2.4.3 YT-1050 series follows suffix symbols as follows. 19
2.5 Product Specification 20
2.5.1 Positioner Specification 20
2.5.2 Specification of Analog Output option 21
2.5.3 Specification of Internal L/S(Limit Switch) option 21
2.5.4 Specification of External L/S option 22
2.6 Certifications 24
2.6.1 YT-1000 & YT-1050 24
2.6.2 YT-1000 24
2.6.3 YT-1050 26
2.6.4 SPTM-6V(External option, Flameproof enclosure) 27
2.6.5 NLB1(External option, Non-explosion proof) 27
2.6.6 YT-870(External option, Flameproof enclosure) 27
2.7 Parts and Assembly 29
2.7.1 YT-1000L 29
2.7.2 YT-1050L 29
2.7.3 YT-1000R 30
2.7.4 YT-1000R + Internal 4-20 mA Analog Output option 30
2.7.5 YT-1000R + Internal Limits Switch option 31
2.7.6 YT-1000R + External 4-20 mA Analog Output option (SPTM-6V) 32
2.7.7 YT-1000R + External Limit Switch option (YT-870) 32
2.8 Product Dimension 33
2.8.1 YT-1000L (Flameproof enclosure) 33
2.8.2 YT-1000L (Non-explosion proof type or Intrinsic safety) 33
2.8.3 YT-1000L (Internal 4-20 mA Analog Output without LCD option) 34
2.8.4 YT-1000R (Fork Lever type + Explosion proof construction for internal pressure) 34
2.8.5 YT-1000R (Namur type) 35
2.8.6 YT-1000R (Dome indicator option) 35

2.8.7 YT-1000R (Internal 4-20 mA Analog Output without LCD option) ... 36
2.8.8 YT-1000R (Internal 4-20 mA Analog Output with LCD option) ... 36
2.8.9 YT-1000R (Internal Limit Switch or Limit Switch + 4-20 mA Analog Output option) ... 37
2.8.10 YT-1000R (External 4-20 mA Analog Output with LCD option, SPTM-6V) ... 38
2.8.11 YT-1000R (External Limit Switch option, YT-870) ... 39
2.8.12 YT-1050L (Explosion proof construction for internal pressure type) ... 40
2.8.13 YT-1050R (Fork Lever type + Explosion proof construction for internal pressure) ... 40
3 principle of positioner movement ... 41
3.1 Linear Positioner ... 41
3.2 Rotary Positioner ... 42
4 Installation ... 43
4.1 Safety ... 43
4.2 Tools for installation ... 43
4.3 Linear positioner Installation ... 44
4.3.1 Preparing Bracket for the positioner ... 44
4.3.2 Installation Steps ... 45
4.4 Rotary positioner Installation ... 48
4.4.1 Components ... 48
4.4.2 Rotary Bracket Information ... 49
4.4.3 Rotary positioner Installation Steps ... 50
5 Connection - Air ... 52
5.1 Safety ... 52
5.2 Supply Pressure Condition ... 52
5.3 Piping Condition ... 52
5.4 Connection – Piping with actuator ... 53
5.4.1 Single acting actuator ... 53
5.4.2 Double acting actuator ... 55
6 Connection – Power ... 57
6.1 General ... 57
6.2 Flameproof enclosure type ... 57
6.2.1 Safety ... 57
6.2.2 Connection ... 58
6.3 Intrinsic safety type ... 59
6.3.1 Connection ... 59
6.4 Internal 4-20 mA Analog Output (Without LCD) option ... 60
6.4.1 Slide Switch ... 60
6.4.2 Buttons ... 61
6.5 Internal 4-20 mA Analog Output (With LCD) option ... 62
6.6 Internal L/S + 4-20 mA Analog Output option (Without LCD) ... 63
7 Adjustments ... 64

7.1 Ra or Da Setting 64
7.1.1 Linear Positioner 64
7.1.2 Rotary positioner 65
7.2 Adjustment - Zero Point and Span (Calibration) 66
7.2.1 Precautions before zero point adjustment and span adjustment 66
7.2.2 Adjustment steps 66
7.3 Adjustment – L/S (Limit Switch, Internal, Option) 68
7.4 Adjustment – A/M switch (Auto/Manual) 69
7.5 Orifice Installment 70
7.6 Reset – Potentiometer (4-20 mA Analog Output option) 70
7.7 Span spring for split range Replacement 72
8 Maintenance 73
8.1 Pilot valve 73
8.2 Seals 73
9 Troubleshooting 74

1 Introduction

1.1 General Information for the users

Thank you for purchasing Rotork YTC Limited products. Each product has been fully inspected after its production to offer you the highest quality and reliable performance. Please read the product manual carefully prior to installing and commissioning the product.

- Installation, commissioning, and maintenance of the product may only be performed by trained specialist personnel who have been authorized by the plant operator accordingly.
- The manual should be provided to the end-user.
- The manual can be altered or revised without any prior notice. Any changes in product's specification, design, and/or any components may not be printed immediately but until the following revision of the manual.
- When the manual refers to **"Valve Zero / Zero"** means the final valve position upon pneumatic pressure has been fully exhausted from positioner's OUT1 port. For example, the valve zero position may differ between linear direct and reverse actions. (DA/RA)
- The manual should not be duplicated or reproduced for any purpose without prior approval from Rotork YTC Limited, Gimpo-si, South Korea.
- In case of any other problems that are not stated in this manual, please make immediate contact to Rotork YTC Limited.
- Positioner is an accessory of the control valve, so please make sure to read the applicable instruction manual of the control valve prior to installation and operation.

1.2 Manufacturer Warranty

- For the safety, it is important to follow the instructions in the manual. Manufacturer will not be responsible for any damages caused by user's negligence.
- Any modifications or repairs to the product may only be performed if expressed in this manual. Injuries and physical damages caused by customer's modifying or repairing the product without a prior consultation with Rotork YTC Limited will not be compensated. If any alterations or modifications are necessary, please contact Rotork YTC Limited directly.
- The warranty period for the product is (12) months from the date of shipment unless otherwise stated. Customers can extend the warranty period by an additional (12) months by registering the product's serial number or lot number, customer information, and installation address on the warranty extension application site Product Registration (https://www.rotork.com/en/service/product-registration).
- Manufacturer warranty will not cover products that have been subjected to abuse, accidents, alterations, modifications, tampering, negligence, misuse, faulty installation, lack of reasonable care, repair or service in any way that is not contemplated in the documentation for the product, or if the model or serial number has been altered, tampered with, defaced or removed; damages that occurs in shipment, due to act of God, failure due to power surge, or cosmetic damage. Improper or incorrectly performed maintenance will void this limited warranty.

- For detailed warranty information, please contact the corresponding local Rotork YTC Limited office or main office in South Korea.

1.3 Explosion Proof Warning (Only for explosion proof type positioners)

Please ensure the unit is being used and installed in conformity with local, regional, and national explosion proof environment.

- Refer to “2.6 Certifications”
- Explosion proof type of cables and gaskets should be used, when explosion gases are present at the installation site.
- Power should be turned off completely when opening product’s cover. When opening the cover, ensure that there is no power remaining in any electrical parts nearby.
- Flameproof enclosure type positioner has 2 ports for power connection. Explosion proof type wires and packing should be used. Blind plug is required when any port is not being used.
- Ring terminal with surface area of more than 1.25 mm^2 with M4 spring washer should be used to connect the power.



- For external ground terminal, ring terminal with surface area of more than 5.5 mm^2 should be used.
- There is risk of explosion due to static electricity charge. Static electricity charge may develop when cleaning the product with a dry cloth. It is imperative to avoid static electricity charge in the hazardous environment. If cleaning the surface of the product is needed, must use wet clothes.
- To meet explosion-proof marking information and ingress protection of IP66, use certified Ex-cable glands and Ex-plugs.
- If you need additional information about the values of the flameproof joints, contact Rotork YTC Limited directly.
- Special conditions for safe use of sign “X” of ATEX / IECEx :
  For information on the dimensions of the flameproof joints the manufacturer shall be contacted.
  The Ex-m apparatus must be protected by a suitable fuse. The breaking capacity of the fuse must be in accordance with the prospective short circuit current of the supply.
  For temperature class T6 the max current shall not exceed 50mA

2 Product Description

2.1 General

YT-1000 / 1050 series Electro-Pneumatic Positioner accurately controls valve stroke in response to an input signal of 4-20 mA from the controller.

2.2 Main Features and Functions

- It is compatible with most of controllers.
- Response time is very fast and accurate.
- Split range 4 to 12 mA or 12 to 20 mA can be set by simple operating. (Inform us when ordering as the parts are different.)
- Low air consumption.
- Simple Direct / Reverse Action change.
- Simple Zero & Span adjustment.
- 4-20 mA Analog Output or limit switch is available as internal or external option on the positioner. However, positioner is non-explosion proof type when internal option has been selected. In case of external option, both the positioner and the external products can be selected with explosion-proof certified products.
- Orifices can be installed even in the field to minimize the hunting occurrence and optimize operating conditions.
- A/M switch can be used to direct supply air to the actuator or to manually operate the positioner or valve without any signal.
- It has IP66, Type 4X (FM) ingress protection grade. (excluding the pressure gauges)
- Polyester powder coating resists the corrosion process. (except YT-1050).
- Maintenance of the positioner is easy because of modularized inner structure.

2.3 Label Description

- MODEL : Indicates the model number and additional symbols.
- EXPLOSION PROOF : Indicates certified explosion proof grade.
- INGRESS PROTECTION : Indicates enclosure protection grade.
- INPUT SIGNAL: Indicates input signal range.
- OPERATING TEMP. : Indicates the allowable operating temperature.
- AMBIENT TEMP. : Indicates the allowable ambient temperature for explosion proof.
- SUPPLY PRESSURE : Indicates the supply pressure range.
- SERIAL NUMBER : Indicates unique serial number.
- MONTH.YEAR : Indicates manufactured month and year.

YT-1000

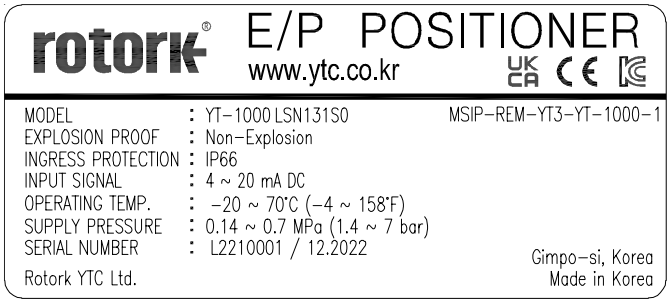

Fig. L-1: YT-1000 Non-explosion proof
(Explosion proof code [N] of 2.4.1 & 2.4.2 Product Code)

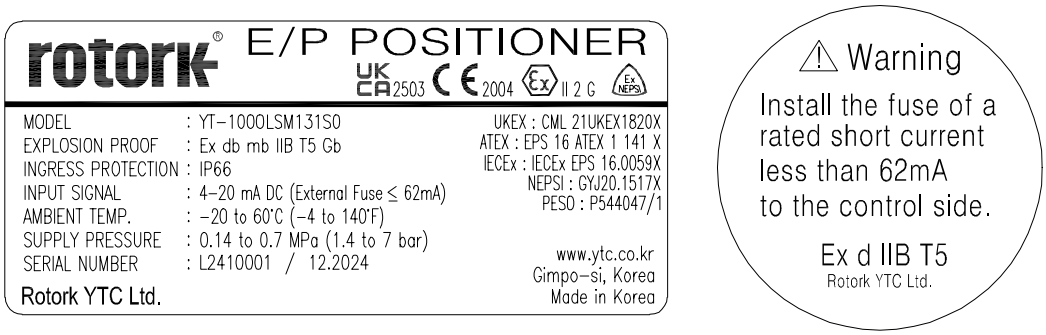

Fig. L-2: YT-1000 Ex db mb IIB T5 Gb (UKEX, ATEX, IECEx, NEPSI, PESO)
(Explosion proof code [M] of 2.4.1 & 2.4.2 Product Code)

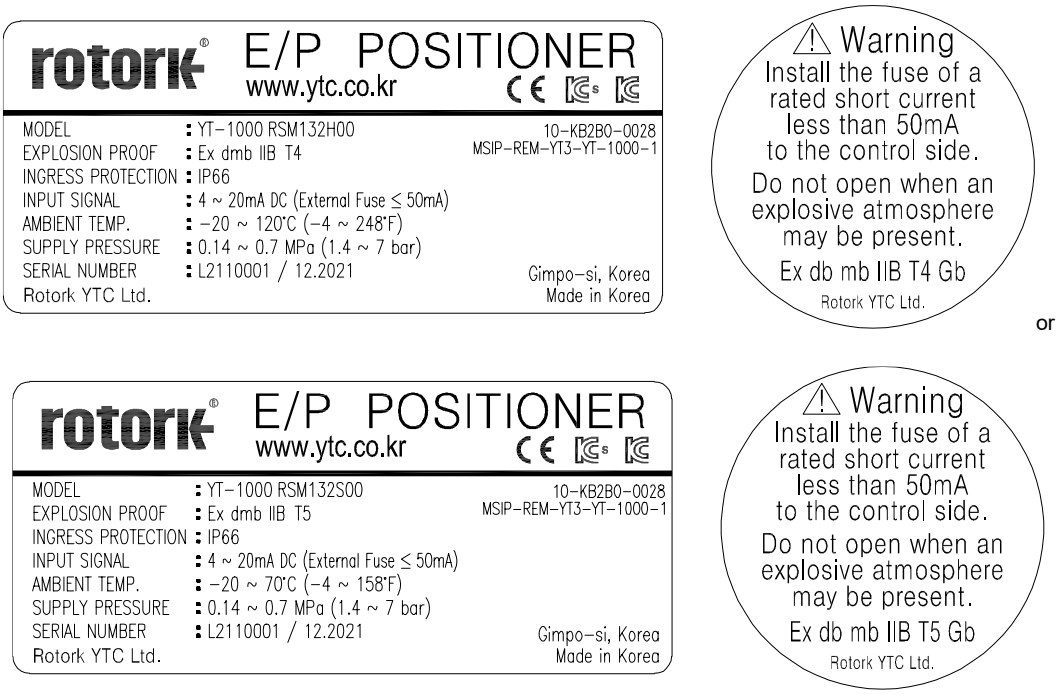

Fig. L-3: YT-1000 Ex dmb IIB T5/T4 (KCs)
(Explosion proof code [M] of 2.4.1 & 2.4.2 Product Code)

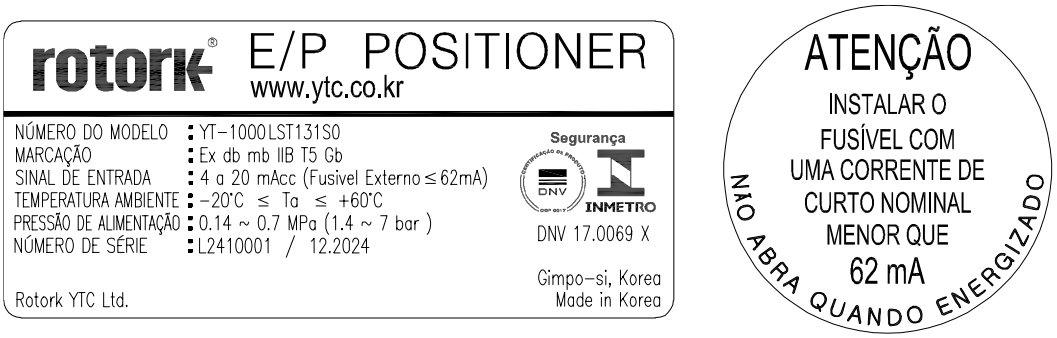

Fig. L-4: YT-1000 Ex db mb IIB T5 Gb (INMETRO)
(Explosion proof code [T] of 2.4.1 & 2.4.2 Product Code)

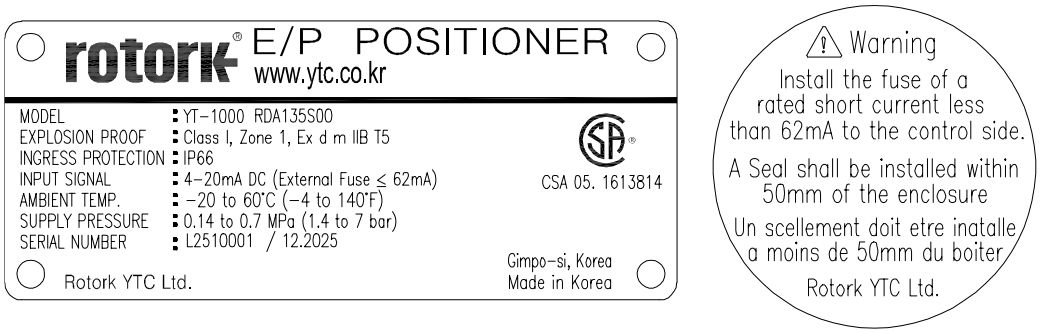

Fig. L-5: YT-1000 Class I, Zone 1, Ex d m IIB T5 (CSA)
(-20 to 60 °C, NBR elastomer)
(Explosion proof code [A] of 2.4.1 & 2.4.2 Product Code)

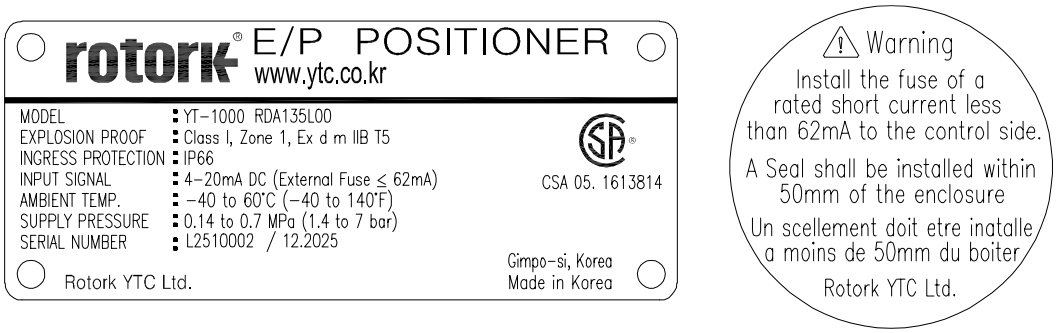

Fig. L-6: YT-1000 Class I, Zone 1, Ex d m IIB T5 (CSA)
(-40 to 60 °C, Silicone elastomer)
(Explosion proof code [A] of 2.4.1 & 2.4.2 Product Code)

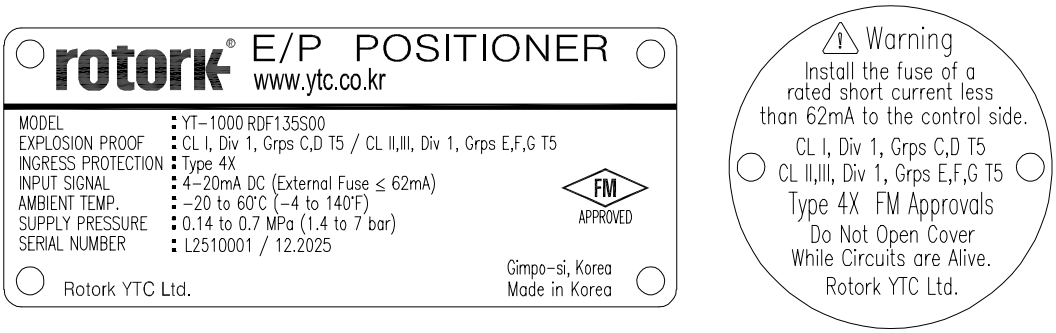

Fig. L-7: YT-1000 CL I, Div 1, Grps C,D T5; CL II, III, Div 1, Grps E,F,G T5; Type 4X (FM)
(Explosion proof code [F] of 2.4.1 & 2.4.2 Product Code)

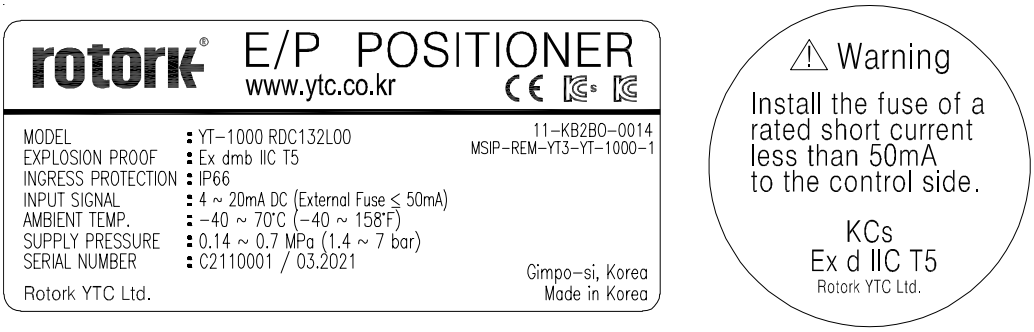

Fig. L-8: YT-1000 Ex dmb IIC T5 (KCs)
(Explosion proof code [C] of 2.4.1 & 2.4.2 Product Code)

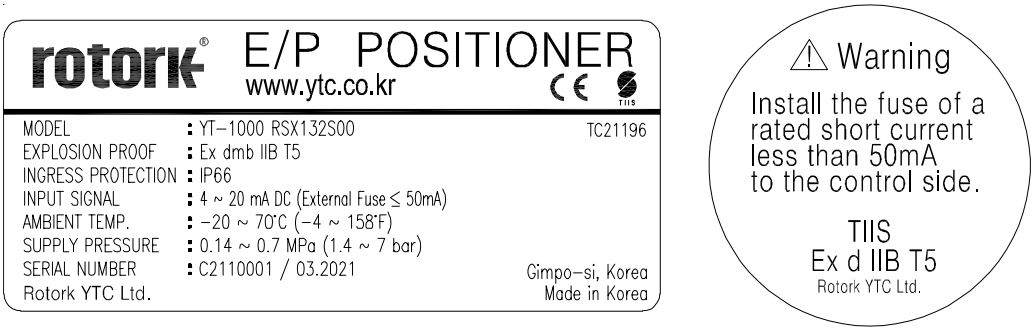

Fig. L-9: YT-1000 Ex dmb IIB T5 (TIIS)
(Explosion proof code [X] of 2.4.1 & 2.4.2 Product Code)

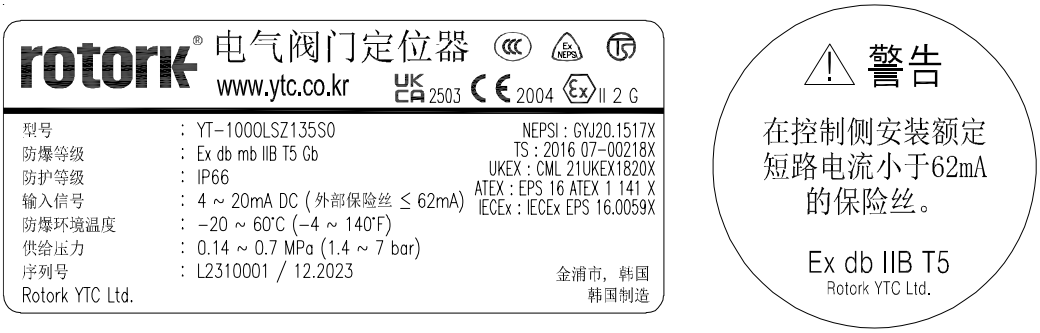

Fig. L-10 : YT-1000 Ex db mb IIB T5 Gb (CCC, NEPSI)
(Explosion proof code [Z] of 2.4.1 & 2.4.2 Product Code)



Fig. L-11 : YT-1000 Ex db mb IIC T6 Gb (CCC, NEPSI)
(Explosion proof code [B] of 2.4.1 & 2.4.2 Product Code)

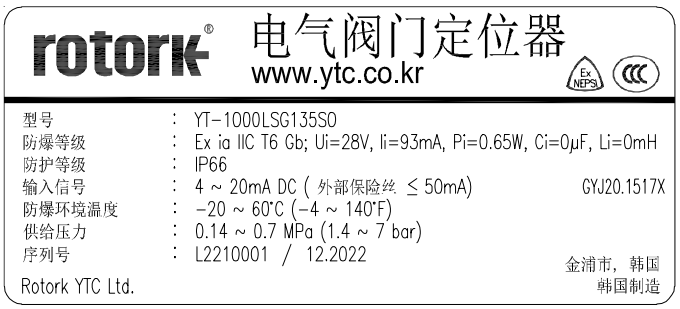

Fig. L-12 : YT-1000 Ex ia IIC T6 Gb (CCC, NEPSI)
(Explosion proof code [G] of 2.4.1 & 2.4.2 Product Code)

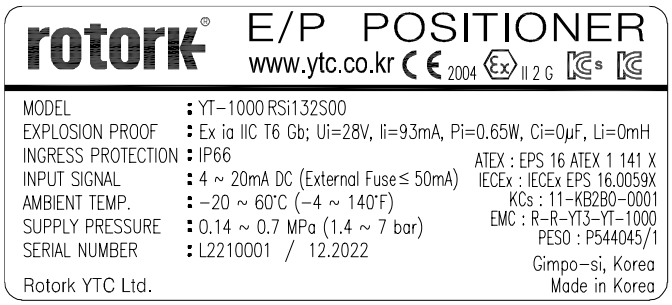

Fig. L-13 : YT-1000 Ex ia IIC T6 Gb (ATEX, IECEx, KCs, PESO)
(Explosion proof code [i] of 2.4.1 & 2.4.2 Product Code)

YT-1050

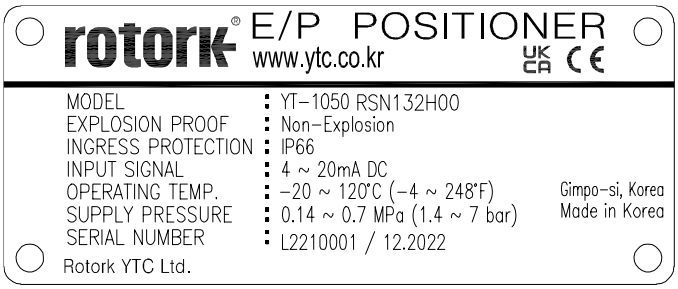

Fig. L-21: YT-1050 Non-explosion proof
(Explosion proof code [N] of 2.4.3 Product Code)

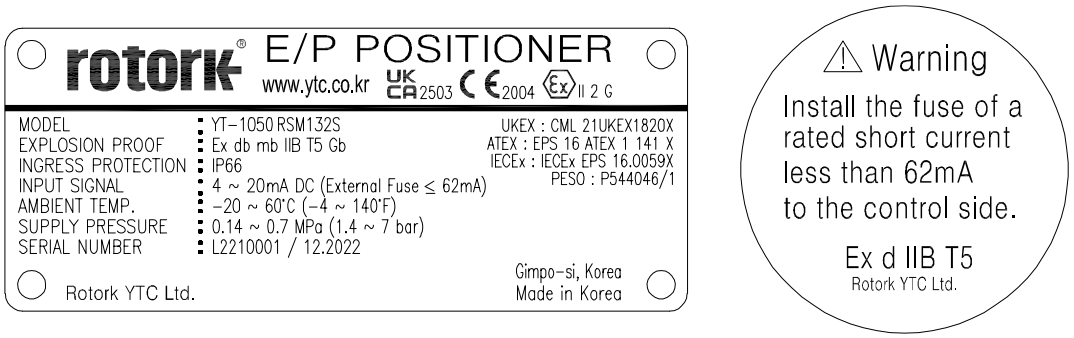

Fig. L-22: YT-1050 Ex db mb IIB T5 Gb (UKEX, ATEX, IECEx, PESO)
(Explosion proof code [M] of 2.4.3 Product Code)

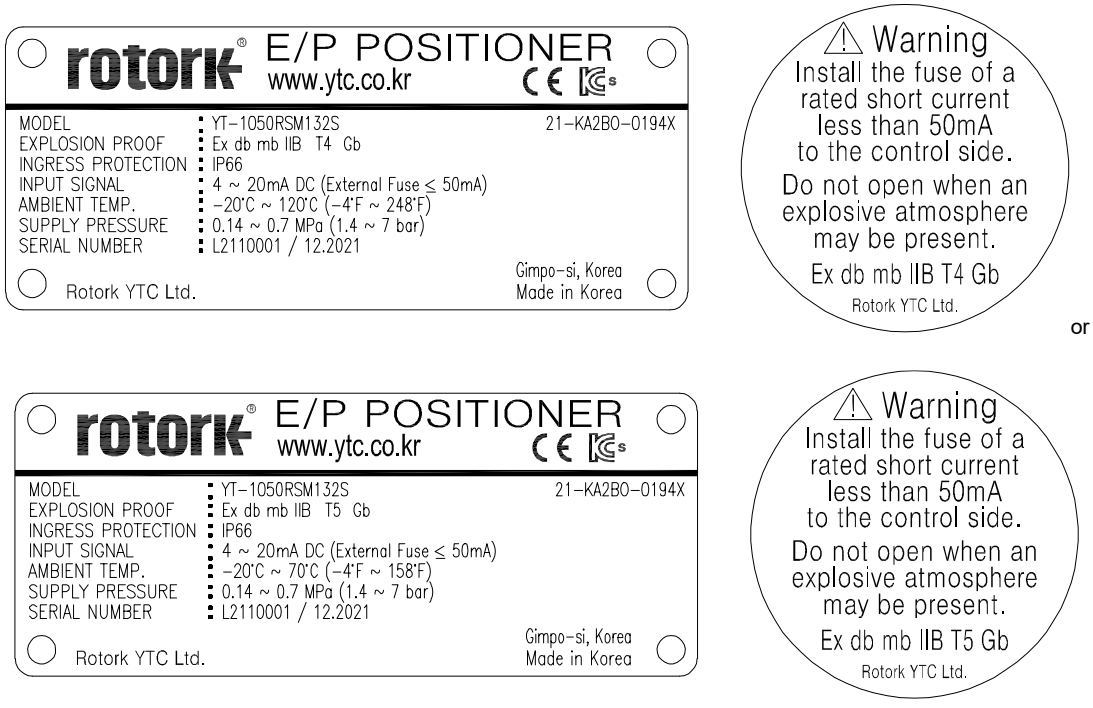

Fig. L-23: YT-1050 Ex db mb IIB T5/T4 Gb (KCs)
(Explosion proof code [M] of 2.4.3 Product Code)

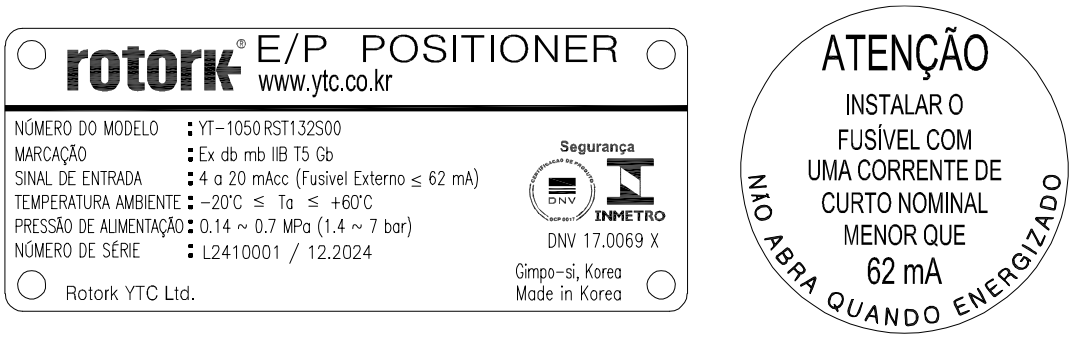

Fig. L-24: YT-1050 Ex db mb IIB T5 Gb (INMETRO)
(Explosion proof code [T] of 2.4.3 Product Code)

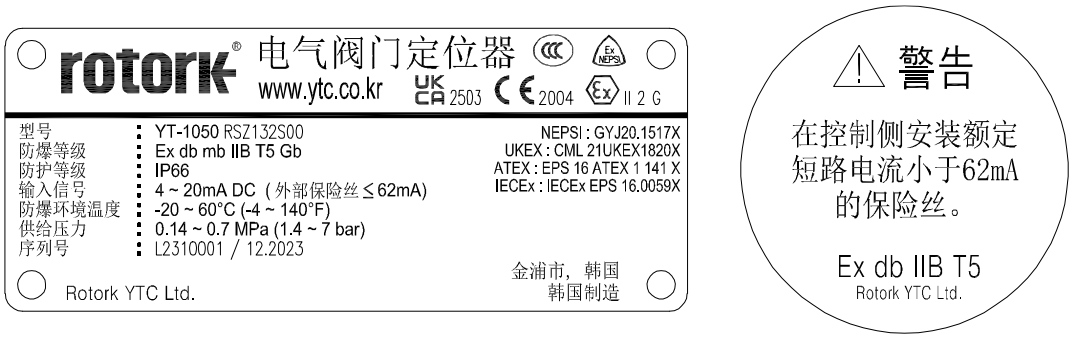

Fig. L-25: YT-1050 Ex db mb IIB T5 Gb (CCC, NEPSI)
(Explosion proof code [Z] of 2.4.3 Product Code)

2.4 Product Code

2.4.1 YT-1000 Linear series follows suffix symbols as follows.

YT-1000L [1] [2] [3] [4] [5] [6] [7]

[1]	Acting type	S : Single D : Double
[2]	Explosion Protection [1]	N : Non-explosion proof (Label Fig. L-1) [2] M : Flameproof enclosure & encapsulation(IIB) : ATEX, IECEx, KCs, NEPSI, UKEX, PESO (Label Fig. L-2, L-3) T : Flameproof enclosure & encapsulation(IIB) : INMETRO (Label Fig. L-4) A : Flameproof enclosure & encapsulation(IIB) : CSA (Label Fig. L-5, L-6) F : Flameproof enclosure & encapsulation : FM (Label Fig. L-7) C : Flameproof enclosure & encapsulation(IIC) : KCs (Label Fig. L-8) X : Flameproof enclosure & encapsulation(IIB) : TIIS (Label Fig. L-9) [3] Z : Flameproof enclosure & encapsulation(IIB) : CCC, NEPSI (Label Fig. L-10) [4] B : Flameproof enclosure & encapsulation(IIC) : CCC, NEPSI (Label Fig. L-11) G : Intrinsic safety(IIC) : CCC, NEPSI (Label Fig. L-12) i : Intrinsic safety(IIC) : ATEX, IECEx, KCs, PESO (Label Fig. L-13)
[3]	Lever Type	1 : 10 to 40 mm 2 : 30 to 70 mm 3 : 60 to 100 mm 4 : 100 to 150 mm
[4]	Orifice Type	1 : Ø1 2 : Ø2 3 : None
[5]	Conduit – Air Connection Type	1 : G 1/2 – Rc 1/4 (N/A for FM & CSA & Ex d of CCC) 2 : G 1/2 – 1/4 NPT (N/A for FM & CSA & Ex d of CCC) 3 : G 1/2 – G 1/4 (N/A for FM & CSA & Ex d of CCC) 4 : M20x1.5P – 1/4 NPT 5 : 1/2 NPT – 1/4 NPT
[6]	Operating Temp. (Non-explosion proof) [5]	S : -20 to 70 °C (-4 to 158 °F) H : -20 to 120 °C (-4 to 248 °F) L : -40 to 70 °C (-40 to 158 °F)

7	Option	0 : None [6] 2 : 4-20 mA Analog Output (Internal, Without LCD) → Non-explosion proof [7] 3 : 4-20 mA Analog Output (Internal, With LCD) → Non-explosion proof

[1] M(except KCs), T, F, X, Z, B, G and i are only available for S in 6 Operating Temp..
M(KCs only) is only available for S and H in 6 Operating Temp..
A and C are only available for S and L in 6 Operating Temp..

[2] Please put the name of the certificate in a purchase order.

[3] [4] Z and B are only available for 4 and 5 in 5 Conduit – Air Connection Type.

[5] This option is just the normal operating temperature of the product and is not related to explosion proof temperature. See “2.6 Certificates” for explosion proof temperature.

[6] [7] These are only available for S and L in 6 Operating Temp..

2.4.2 YT-1000 Rotary series follows suffix symbols as follows.

YT-1000R 1 2 3 4 5 6 7 8

1	Acting type	S : Single D : Double
2	Explosion Protection [1]	N : Non-explosion proof (Label Fig. L-1) [2] M : Flameproof enclosure & encapsulation(IIB) : ATEX, IECEx, KCs, NEPSI, UKEX, PESO (Label Fig. L-2, L-3) T : Flameproof enclosure & encapsulation(IIB) : INMETRO (Label Fig. L-4) A : Flameproof enclosure & encapsulation(IIB) : CSA (Label Fig. L-5, L-6) F : Flameproof enclosure & encapsulation : FM (Label Fig. L-7) C : Flameproof enclosure & encapsulation(IIC) : KCs (Label Fig. L-8) X : Flameproof enclosure & encapsulation(IIB) : TIIS (Label Fig. L-9) [3] Z : Flameproof enclosure & encapsulation(IIB) : CCC, NEPSI (Label Fig. L-10) [4] B : Flameproof enclosure & encapsulation(IIC) : CCC, NEPSI (Label Fig. L-11) G : Intrinsic safety(IIC) : CCC, NEPSI (Label Fig. L-12) i : Intrinsic safety(IIC) : ATEX, IECEx, KCs, PESO (Label Fig. L-13)
3	Lever Type	1 : M6 x 34L 2 : M6 x 63L 3 : M8 x 34L 4 : M8 x 63L 5 : Namur

4 Orifice Type	1 :	Ø1
	2 :	Ø2
	3 :	None
5 Conduit – Air Connection Type	1 :	G 1/2 – Rc 1/4 (N/A for FM & CSA & Ex d of CCC)
	2 :	G 1/2 – 1/4 NPT (N/A for FM & CSA & Ex d of CCC)
	3 :	G 1/2 – G 1/4 (N/A for FM & CSA & Ex d of CCC)
	4 :	M20x1.5P – 1/4 NPT
	5 :	1/2 NPT – 1/4 NPT
6 Operating Temp. (Non-explosion proof) [5]	S :	-20 to 70 °C (-4 to 158 °F)
	H :	-20 to 120 °C (-4 to 248 °F)
	L :	-40 to 70 °C (-40 to 158 °F)
7 Option1	0 :	Standard Cover
	[6] 1 :	Dome Cover
8 Option2	0 :	None
	[7] 1 :	4-20 mA Analog Output (Internal, Without LCD) → Non-explosion proof
	[8] 2 :	4-20 mA Analog Output (External, With SPTM-6V, Explosion proof, With LCD)
	[9] 3 :	L/S (Limit Switch x 2, Internal) → Non-explosion proof
	[10] 4 :	L/S(2ea) [External, With NLB1(Non-explosion proof) or YT-870(Explosion proof)]
	[11] 5 :	4-20 mA Analog Output + L/S(2ea) (Internal, Without LCD) → Non-explosion proof
	[12] 6 :	4-20 mA Analog Output + L/S(2ea) (External, With YT-870, Explosion proof)

[1] M(except KCs), T, F, X, Z, B, G and i are only available for S in 6 Operating Temp..
M(KCs only) is only available for S and H in 6 Operating Temp..
A and C are only available for S and L in 6 Operating Temp..

[2] Please put the name of certificate in a purchase order.

[3] [4] Z and B are only available for 4 and 5 in 5 Conduit – Air Connection Type.

[5] This option is just the normal operating temperature of the product and is not related to explosion proof temperature. See “2.6 Certificates” for explosion proof temperature.

[6] 1 in 7 Option1 + 0 in 8 Option2 is only available for M(ATEX, IECEx, KCs and NEPSI only), A, C, Z, B, G, i(ATEX, IECEx and KCs only) and N in 2 Explosion Proof.

[7] There is also with LCD type. So If you would like to order this, please fill in “4-20 mA Analog Output (Internal, With LCD)” on the order form.

[7] [8] These are only available for S and L in 6 Operating Temp..

[8] The nameplate of the external product, SPTM-6V, is KCs+NEPSI.
The conduit entries of SPTM-6V is G 1/2. For NEPSI, it is 1/2 NPT.
SPTM-6V(Explosion protection for Ex d IIC) is certified with KCs and NEPSI so this option is available for M(KCs and NEPSI only), C, Z(NEPSI only), B(NEPSI only), G(NEPSI only), i (KCs only) and N(Non-explosion proof) in 2 Explosion Proof.
Only available for 0 in 7 Option 1.

[9] [10] [11] [12] These are only available for S in 6 Operating Temp. and 1 in 7 Option 1.

[10] Mechanical switch(SPDT) is only available for NLB1.
The conduit entry of NLB1 is G 1/2.

[10] [12] Mechanical switch(SPDT) and Inductive proximity(Autonics) are available for YT-870.
YT-870 has two kinds of nameplates, KCs+ATEX+IECEx+CSA and CCC.
The conduit entry of external option of YT-870 is G 3/4. For CSA and CCC, it is 1/2 NPT.
YT-870(Explosion protection for Ex d IIC) is certified with KCs, ATEX, IECEx, CSA and CCC so this option is available for M(ATEX/IECEx and KCs only), A, C, Z(CCC only), B(CCC only), G(CCC only), i(ATEX, IECEx and KCs only) and N(Non-explosion proof) options in 2 Explosion Proof.

2.4.3 YT-1050 series follows suffix symbols as follows.

YT-1050 [1] [2] [3] [4] [5] [6] [7]

[1] Motion type		L : Linear R : Rotary
[2] Acting type		S : Single D : Double
[3] Explosion Protection [1]		N : Non-explosion proof (Label Fig. L-21) [2] M : Flameproof enclosure & encapsulation(IIB) : ATEX, IECEx, KCs, UKEX, PESO (Label Fig. L-22, 23) T : Flameproof enclosure & encapsulation(IIB) : INMETRO (Label Fig. L-24) Z : Flameproof enclosure & encapsulation(IIB) : CCC, NEPSI (Label Fig. L-25)
[4] Lever Type	Linear	1 : 10 to 40 mm 2 : 30 to 70 mm 3 : 60 to 100 mm 4 : 100 to 150 mm
	Rotary	1 : M6 x 34L 2 : M6 x 63L 3 : M8 x 34L 4 : M8 x 63L 5 : NAMUR
[5] Orifice Type		1 : Ø1 2 : Ø2 3 : None
[6] Conduit – Air Connection Type		2 : G 1/2 – 1/4 NPT (N/A for CCC) 5 : 1/2 NPT – 1/4 NPT (only CCC)
[7] Operating Temp. (Non-explosion proof) [3]		S : -20 to 70 °C (-4 to 158 °F) H : -20 to 120 °C (-4 to 248 °F) L : -40 to 70 °C (-40 to 158 °F)

[1] M(except KCs), T and Z are only available for “S” in [7] operating temperature.
M(KCs only) is only available for S, H in [7] Operating Temp..

[2] Please put the name of certificate in a purchase order.

[3] This option is just the normal operating temperature of the product and is not related to explosion proof temperature. See “2.6 Certificates” for explosion proof temperature.

2.5 Product Specification

2.5.1 Positioner Specification

Model			**YT-1000**		**YT-1050**	
Housing Material			Aluminum		Stainless steel 316	
Motion Type			Linear	Rotary	Linear	Rotary
Acting Type			Single / Double			
Input Signal			4-20 mA DC			
Supply Pressure			0.14 to 0.7 MPa (1.4 to 7 bar)			
Stroke			10 to 150 mm	55 to 100°	10 to 150 mm	55 to 100°
Impedance			Max. 250 ± 15 Ω			
Conduit Entry			G 1/2(N/A for some certificates) or 1/2 NPT or M20x1.5P		G 1/2(N/A for CCC) or 1/2 NPT(only CCC)	
Air Connection			Rc 1/4 or G 1/4 or 1/4 NPT		1/4 NPT	
Gauge Connection			1/8 NPT			
Ingress Protection			IP66, Type 4X(FM)		IP66	
			(excluding the pressure gauges)			
Explosion Protection			1. Non-explosion proof			
			2. Flameproof enclosure & encapsulation 3. Intrinsic safety		2. Flameproof enclosure & encapsulation	
			Refer to “2.6 Certifications” for details			
Ambient Temperature	**Operating**	**Standard**	-20 to 70 °C (-4 to 158 °F)			
		High	-20 to 120 °C (-4 to 248 °F)			
		Low	-40 to 70 °C (-40 to 158 °F)			
	Explosion Proof		Refer to “2.6 certifications” for details			
Linearity		**Single**	± 1 % F.S.			
		Double	± 2 % F.S.			
Hysteresis			± 1 % F.S.			
Sensitivity		**Single**	± 0.2 % F.S.			
		Double	± 0.5 % F.S.			
Repeatability			± 0.5 % F.S.			
Flow Capacity			80 LPM (Sup. = 0.14 MPa)			
Air Consumption			Single : 1.64 LPM/average (Sup. 0.4 MPa, 4.0 bar) Double : 1.88 LPM/average (Sup. 0.4 MPa, 4.0 bar)			
Feedback Signal (Option)			4-20 mA (DC 9 to 28 V)			
Weight			2.7 kg (6.1 lb)	2.8 kg (6.2 lb)	5.71 kg (12.6 lb)	
Painting			Polyester Powder Coating		-	

⚠ Tested under ambient temperature of 20 °C, absolute pressure of 760 mmHg, and humidity of 65 %.
Please contact Rotork YTC Limited for detailed testing specification.

2.5.2 Specification of Analog Output option

External		**External SPTM Model**	**SPTM-6V**	
		Housing Material	Aluminum	
	Internal	**Motion Type**	Linear	Rotary
		Input Stroke	10 to 150 mm	55 to 100°
		Output Signal	4-20 mA DC	
		External Load Resistance	Rext ≤ (Vs - 9) / 20 mA, 750 ohms @Vs = 24 V	
		Supply Voltage	Vs : 9 to 28 V DC	
		Linearity	± 1 % F.S.	
		Hysteresis	± 0.2 % F.S.	
		Sensitivity	± 0.2 % F.S	
		Conduit Entry	G 1/2 (for NEPSI, 1/2 NPT)	
		Ingress Protection	IP67	
		Explosion Protection	Flameproof enclosure Refer to “2.6.4 certifications”	
		Ambient Temperature — **Operating**	-40 to 85 °C (-40 to 185 °F)	
		Ambient Temperature — **Explosion proof**	Refer to “2.6.4 certifications”	
		Weight	1.3 Kg (2.9 lb)	
		Painting	Polyester Powder Coating	

⚠ Tested under ambient temperature of 20 °C, absolute pressure of 760 mmHg, and humidity of 65 %.
Please contact Rotork YTC Limited for detailed testing specification.

2.5.3 Specification of Internal L/S(Limit Switch) option

Switch Type		Mechanical Switch (2 x SPDT)
Micro Switch Model		V-165-1A5 (OMRON)
Switch Rating	**AC**	250 V 16 A
	DC	125 V 0.6 A, 250 V 0.3 A
Terminal		8 Points
Ambient temperature		-25 to 80 °C (-13 to 176 °F)

⚠ Tested under ambient temperature of 20 °C, absolute pressure of 760 mmHg, and humidity of 65 %.
Please contact Rotork YTC Limited for detailed testing specification.

2.5.4 Specification of External L/S option

1) Non-explosion proof

External L/S Model		NLB1
Switch Type		Mechanical Type (2 x SPDT)
Model No. & Manufacturer		SZM-V16-SFA-61 (STARION)
Switch Rating	**AC**	16A 125/250V
	DC	0.6A 125V, 0.3A 250V
Terminal		8 Points
Conduit Entry		G 1/2
Ingress Protection		IP67
Explosion Protection		Non-explosion proof
Ambient Temperature		-25 to 80 °C (-13 to 176 °F)
Housing Material		Aluminum
Weight		52 g (1.66 lb)
Painting		Polyester Powder Coating

⚠ Tested under ambient temperature of 20 °C, absolute pressure of 760 mmHg, and humidity of 65 %.
Please contact Rotork YTC Limited for detailed testing specification.

2) Flameproof enclosure

External L/S Model		**YT-870**	
Switch Type		Mechanical Type (2 x SPDT)	Inductive Proximity Sensor
Model No. & Manufacturer		SS-5GL (OMRON)	PS17-5DNU (Autonics, NPT type)
Switch Rating	**AC**	250 V 3 A, 125 V 5 A	-
	DC	250 V 0.2 A, 125 V 0.4 A, 30 V 4 A, 14 V 5 A, 8 V 5 A	12 to 24 V
Terminal		8 Points	
Conduit Entry		G 3/4 (for CCC, 1/2 NPT)	
Ingress Protection		Type 4, 4X(CSA), IP67	
Explosion Protection		Flameproof enclosure. Refer to “2.6.5 Certifications”	
Ambient Temperature		-20 to 60 °C (-4 to 140 °F)	
Housing Material		Aluminum	
Weight		1.5 Kg (3.3 lb)	
Painting		Polyester Powder Coating	

Tested under ambient temperature of 20 °C, absolute pressure of 760 mmHg, and humidity of 65 %.
Please contact Rotork YTC Limited for detailed testing specification.

2.6 Certifications

※ All certifications below are posted on Rotork YTC Limited homepage (https://www.rotork.com/ytc).

2.6.1 YT-1000 & YT-1050

- **INMETRO (Brazil)**

  Rating : Ex db mb IIB T5 Gb
  Certification No. : DNV 17.0069 X
  Ambient temperature : -20 to 60°C (-4 to 140°F)

- **UKEX**

  Rating : II 2G Ex db mb IIB T5 Gb, NEMA 4X
  Certification No. : CML 21UKEX1820X
  Ambient temperature : -20 to 60°C (-4 to 140°F)

2.6.2 YT-1000

- **ATEX**

  Rating :
  1) II 2G Ex db mb IIB T5 Gb
  2) II 2G Ex ia IIC T6 Gb

  IP66, NEMA 4X
  Certification No. : EPS 16 ATEX 1 141 X
  Ambient temperature : -20 to 60°C (-4 to 140°F)

- **IECEx**

  Rating :
  1) Ex db mb IIB T5 Gb
  2) Ex ia IIC T6 Gb

  IP66, NEMA 4X
  Certification No. : IECEx EPS 16.0059X
  Ambient temperature : -20 to 60°C (-4 to 140°F)

- **KCs**

  1) Rating : Ex dmb IIB T5/T4
  Certification No. : 10-KB2BO-0028
  Ambient temperature : T5 → -20 to 70°C (-4 to 158°F), T4 → -20 to 120°C (-4 to 248°F)

  2) Rating : Ex dmb IIC T5
  Certification No. : 11-KB2BO-0014
  Ambient temperature : -20 to 60°C (-4 to 140°F) → NBR elastomer
  -40 to 60°C (-40 to 140°F) → Silicone elastomer

3) Rating : Ex ia IIC T6 Gb
Certification No. : 11-KB2BO-0001
Ambient temperature : -20 to 60°C (-4 to 140°F)

- **CCC (China)**

Rating :
1) Ex db mb IIB T5 Gb
2) Ex db mb IIC T6 Gb
3) Ex ia IIC T6 Gb

Certification No. : 2020322307002521
Ambient temperature : -20 to 60°C (-4 to 140°F)

- **NEPSI**

Rating :
1) Ex db mb IIB T5 Gb
2) Ex db mb IIC T6 Gb
3) Ex ia IIC T6 Gb

Certification No. : GYJ25.1222X
Ambient temperature : -20 to 60°C (-4 to 140°F)

- **FM**

Rating : CL I, Div 1, Grps C,D T5; CL II, III, Div 1, Grps E,F,G T5; Type 4X
Certification No. : FM19US0090
Ambient temperature : -20 to 60°C (-4 to 140°F)

- **CSA**

Rating : Ex d m IIB T5 Gb
Certification No. : 1613814
Ambient temperature : -20 to 60°C (-4 to 140°F) → NBR elastomer
-40 to 60°C (-40 to 140°F) → Silicone elastomer

- **TIIS**

Rating : Ex dmb IIB T5
Certification No. : TC21196
Ambient temperature : -20 to 70°C (-4 to 158°F)

- **PESO (India)**

1) Rating : Ex db mb IIB T5 Gb
Certification No. : P544047/1
Ambient temperature : -20 to 60°C (-4 to 140°F)

2) Rating : Ex ia IIC T6 Gb
Certification No. : P544045/1
Ambient temperature : -20 to 60°C (-4 to 140°F)

- **Electromagnetic Compatibility (EMC)**
  - EMC directive 2014/30/EC from April 2016
  - EC Directive for CE conformity marking

2.6.3 YT-1050

- **ATEX**
  Rating : II 2G Ex db mb IIB T5 Gb
  IP66, NEMA 4X
  Certification No. : EPS 16 ATEX 1 141 X
  Ambient temperature : -20 to 60°C (-4 to 140°F)

- **IECEx**
  Rating : Ex db mb IIB T5 Gb
  IP66, NEMA 4X
  Certification No. : IECEx EPS 16.0059X
  Ambient temperature : -20 to 60°C (-4 to 140°F)

- **KCs (Korea)**
  Rating : Ex db mb IIB T5/T4 Gb
  Certification No. : 21-KA2BO-0194X
  Ambient temperature : T5 → -20 to 70°C (-4 to 158°F), T4 → -20 to 120°C (-4 to 248°F)

- **CCC (China)**
  Rating : Ex db mb IIB T5 Gb
  Certification No. : 2020322307002521
  Ambient temperature : -20 to 60°C (-4 to 140°F)

- **NEPSI**
  Rating : Ex db mb IIB T5 Gb
  Certification No. : GYJ20.1517X
  Ambient temperature : -20 to 60°C (-4 to 140°F)

- **PESO (India)**
  Rating : Ex db mb IIB T5 Gb
  Certification No. : P544046/1
  Ambient temperature : -20 to 60°C (-4 to 140°F)

2.6.4 SPTM-6V(External option, Flameproof enclosure)

- **KCs (Korea)**
  Rating : Ex d IIC T6 IP67
  Certification No. : 12-KB2BO-0313
  Ambient temperature : -40 to 60°C (-40 to 140°F)

- **NEPSI (China)**
  Rating : Ex d IIC T6 Gb
  Certification No. : GYJ20.1519X
  Ambient temperature : -40 to 60°C (-40 to 140°F)

- **Electromagnetic Compatibility (EMC)**
  - EMC directive 2014/30/EC from April 2016
  - EC Directive for CE conformity marking

2.6.5 NLB1(External option, Non-explosion proof)

- **Electromagnetic Compatibility (EMC)**
  - EMC directive 2014/30/EC from April 2016
  - EC Directive for CE conformity marking

2.6.6 YT-870(External option, Flameproof enclosure)

- **KCs (Korea)**
  1) Rating : Ex d IIC T6
     Certification No. : 19-KA2BO-0870X
     Ambient temperature : -20 to 60°C (-4 to 140°F)

  2) Rating : Ex tb IIIC T85°C
     Certification No. : 19-KA2BO-0871X
     Ambient temperature : -20 to 60°C (-4 to 140°F)

- **ATEX**
  Rating : II 2G Ex db IIC T6 Gb, II 2D Ex tb IIC T85°C Db
  Certification No. : EPS 16 ATEX 1 140 X
  Ambient temperature : -20 to 60°C (-4 to 140°F)

- **IECEx**
  Rating : Ex db IIC T6 Gb, Ex tb IIIC T85°C Db
  Certification No. : IECEx EPS 14.0053X
  Ambient temperature : -20 to 60°C (-4 to 140°F)

- **CSA**

  Rating : Ex db IIC T6
  Class I, Zone 1, AEx db IIC T6
  Class II, Division 1, Groups E, F and G; Ex tb IIIC T85°C
  Zone 21, AEx tb IIIC T85°C
  Type 4, 4X ; IP67
  Certification No. : 2541711
  Ambient temperature : -20 to 60°C (-4 to 140°F)

- **CCC (China)**

  Rating : Ex d IIC T6 Gb, Ex tD A21 IP67 T85°C
  Certification No. : 2020322307000620
  Ambient temperature : -20 to 60°C (-4 to 140°F)

- **Electromagnetic Compatibility (EMC)**

  - EMC directive 2014/30/EC from April 2016
  - EC Directive for CE conformity marking

2.7 Parts and Assembly

2.7.1 YT-1000L

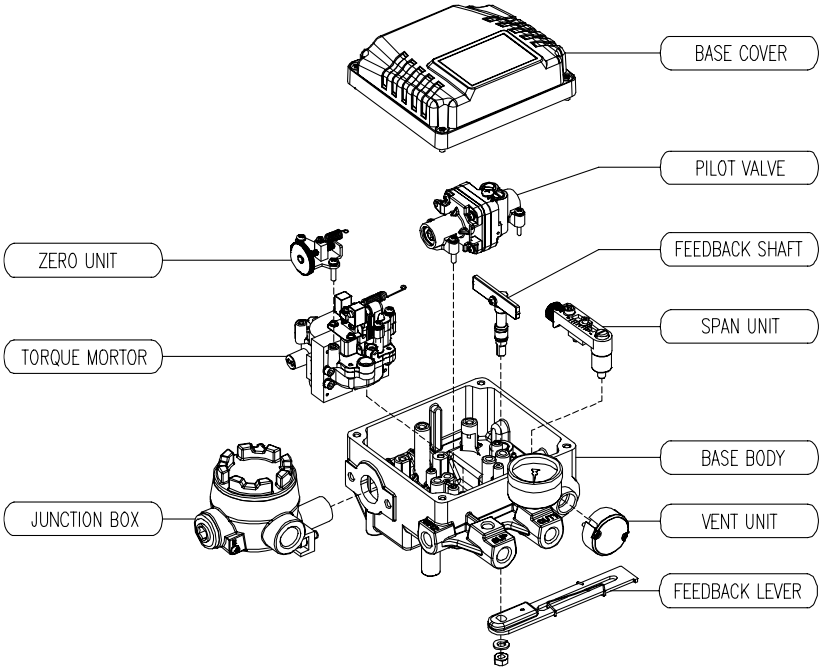

2.7.2 YT-1050L

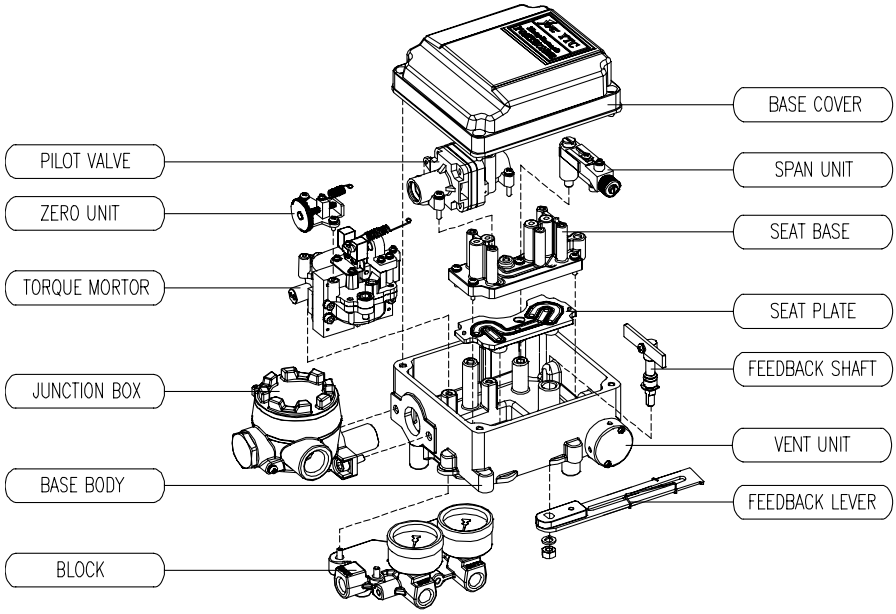

2.7.3 YT-1000R

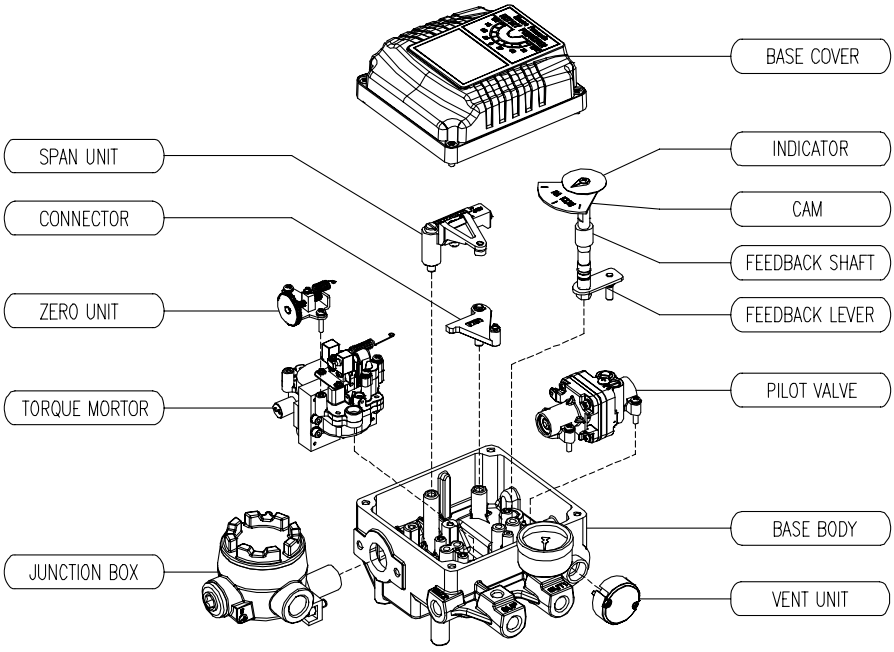

2.7.4 YT-1000R + Internal 4-20 mA Analog Output option

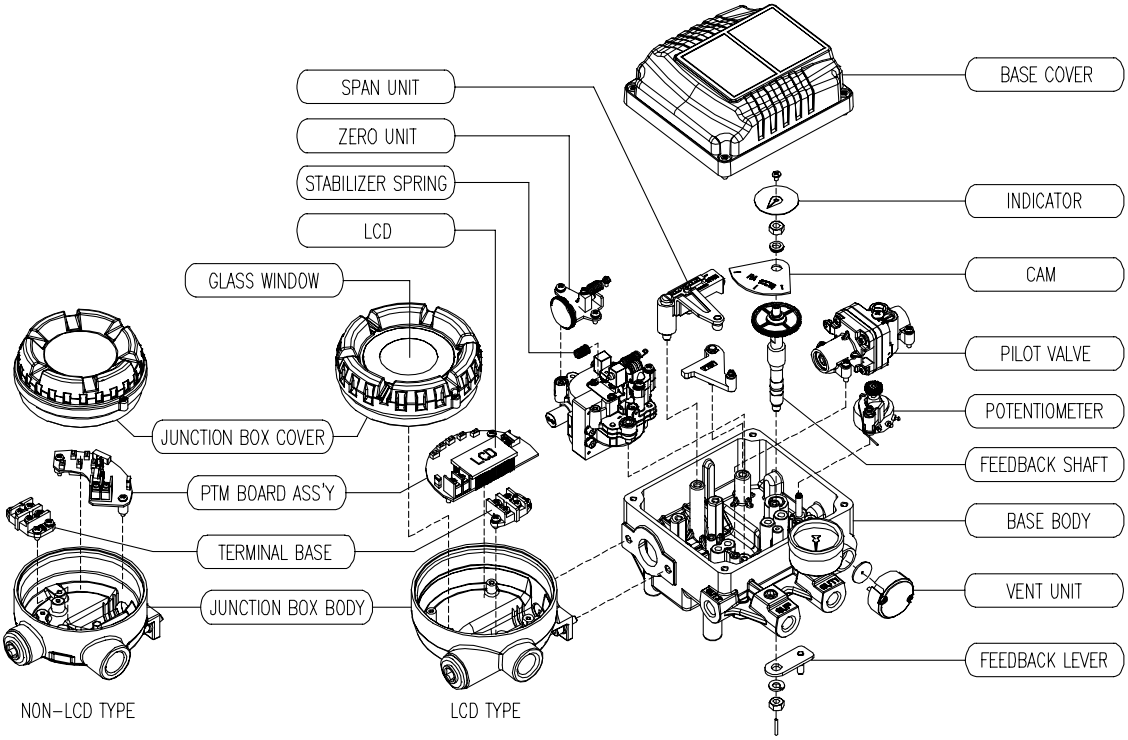

2.7.5 YT-1000R + Internal Limits Switch option

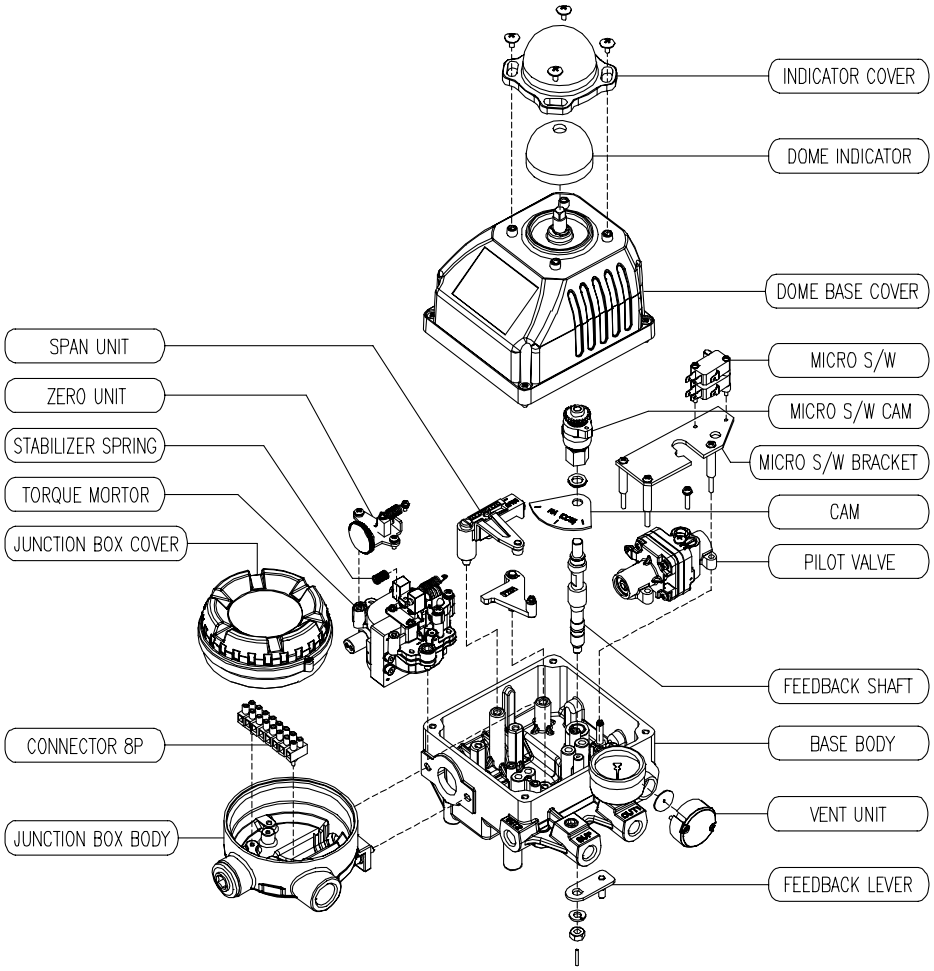

2.7.6 YT-1000R + External 4-20 mA Analog Output option (SPTM-6V)

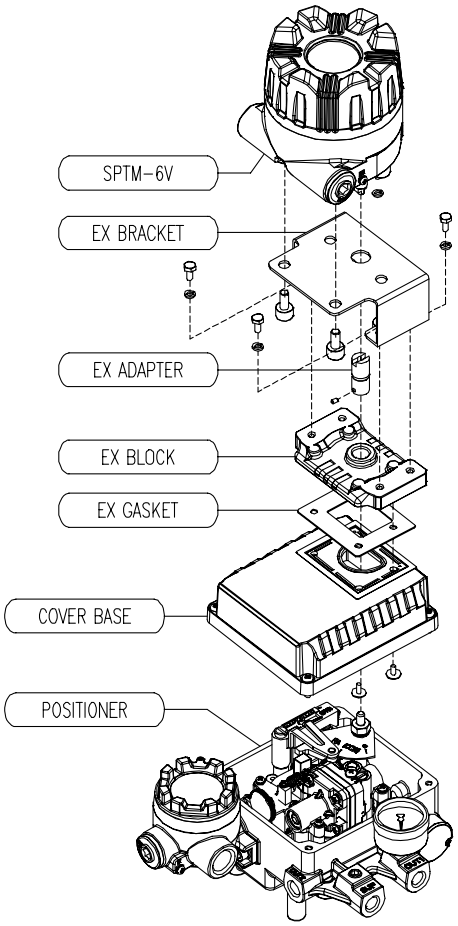

2.7.7 YT-1000R + External Limit Switch option (YT-870)

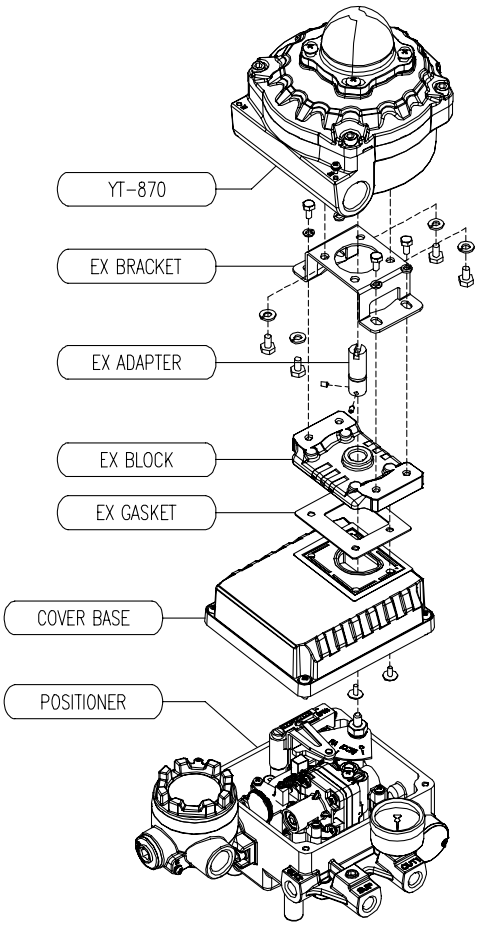

2.8 Product Dimension

2.8.1 YT-1000L (Flameproof enclosure)

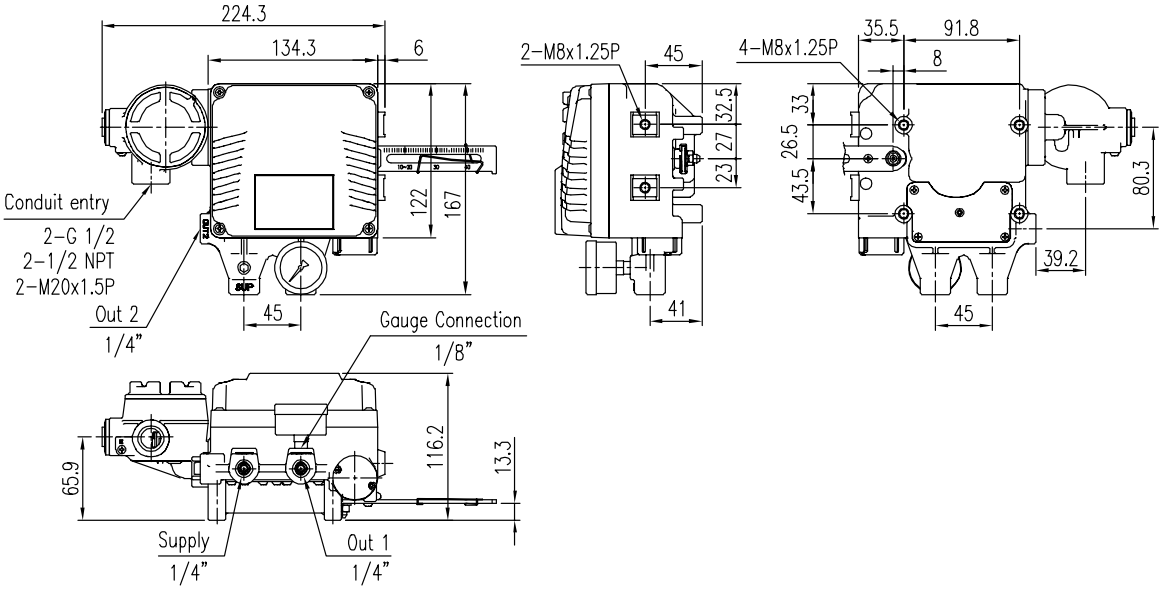

2.8.2 YT-1000L (Non-explosion proof type or Intrinsic safety)

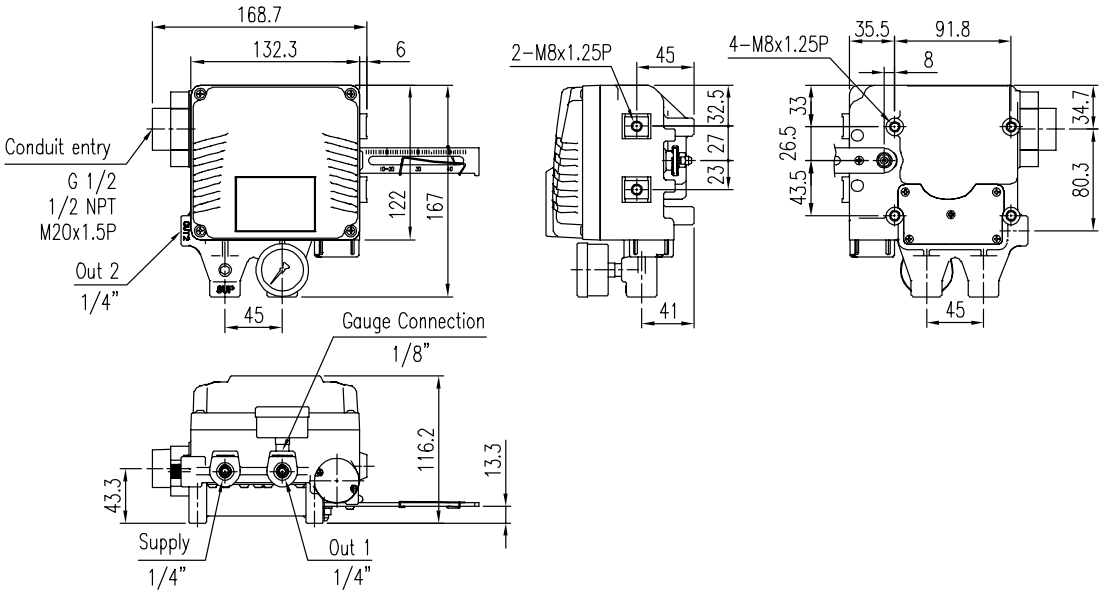

2.8.3 YT-1000L (Internal 4-20 mA Analog Output without LCD option)

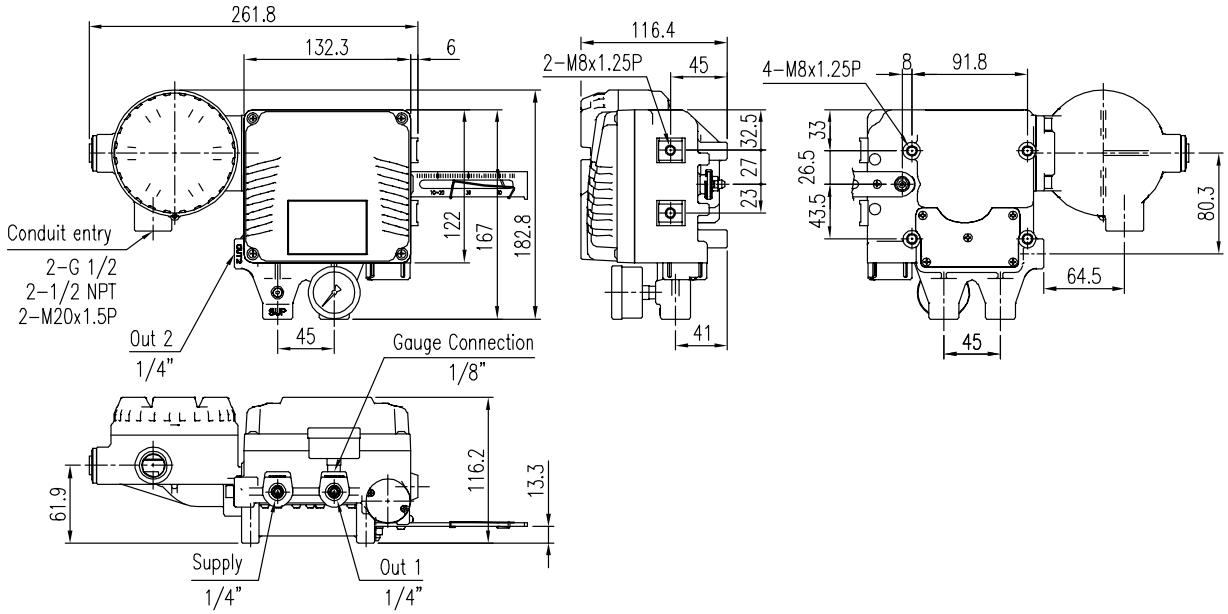

2.8.4 YT-1000R (Fork Lever type + Explosion proof construction for internal pressure)

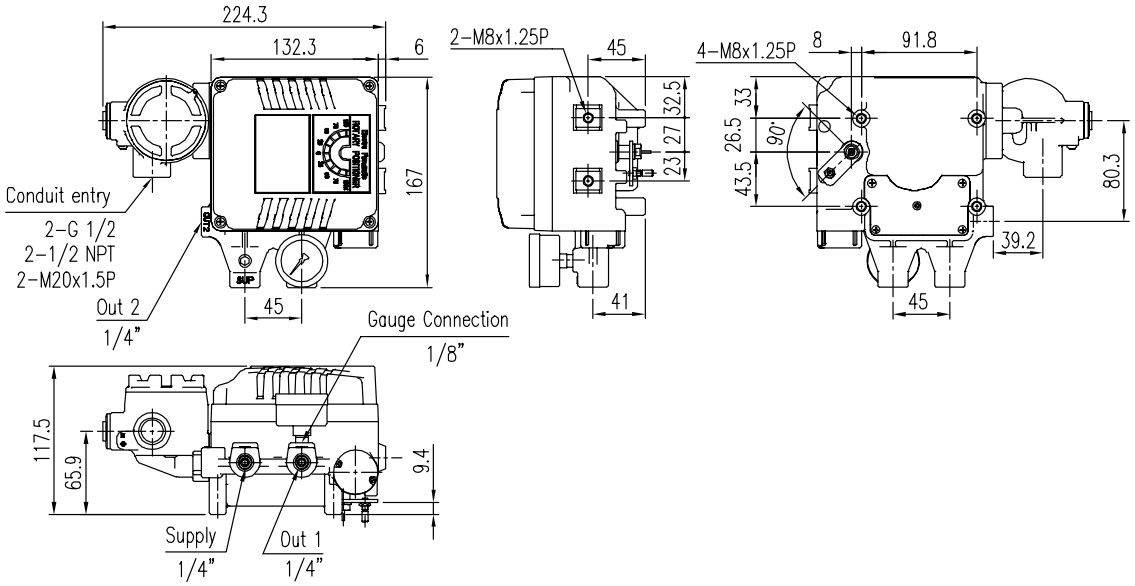

2.8.5 YT-1000R (Namur type)

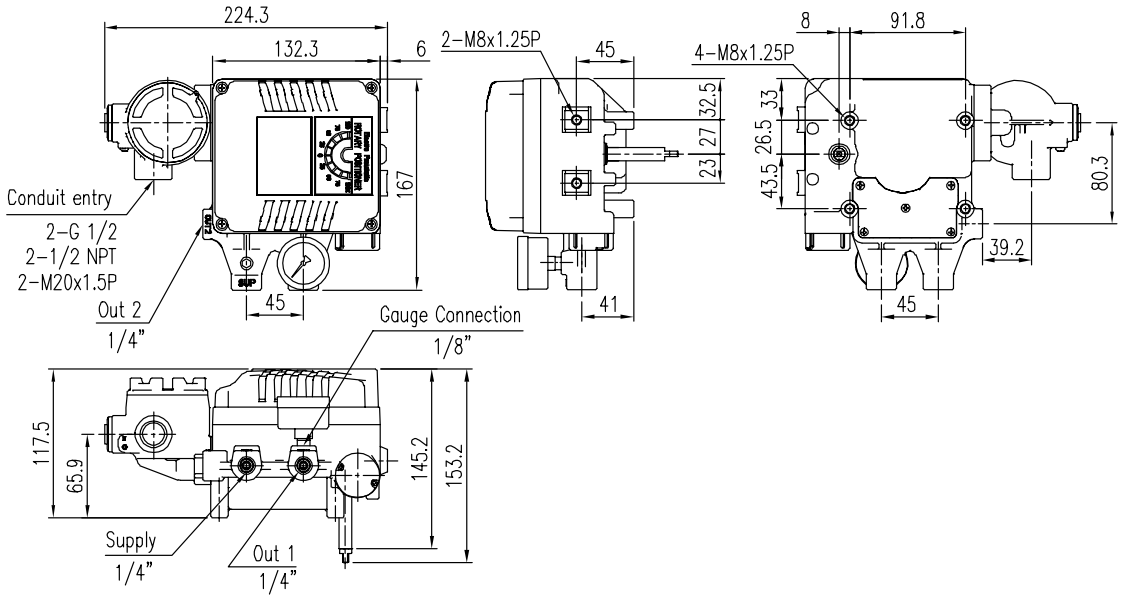

2.8.6 YT-1000R (Dome indicator option)

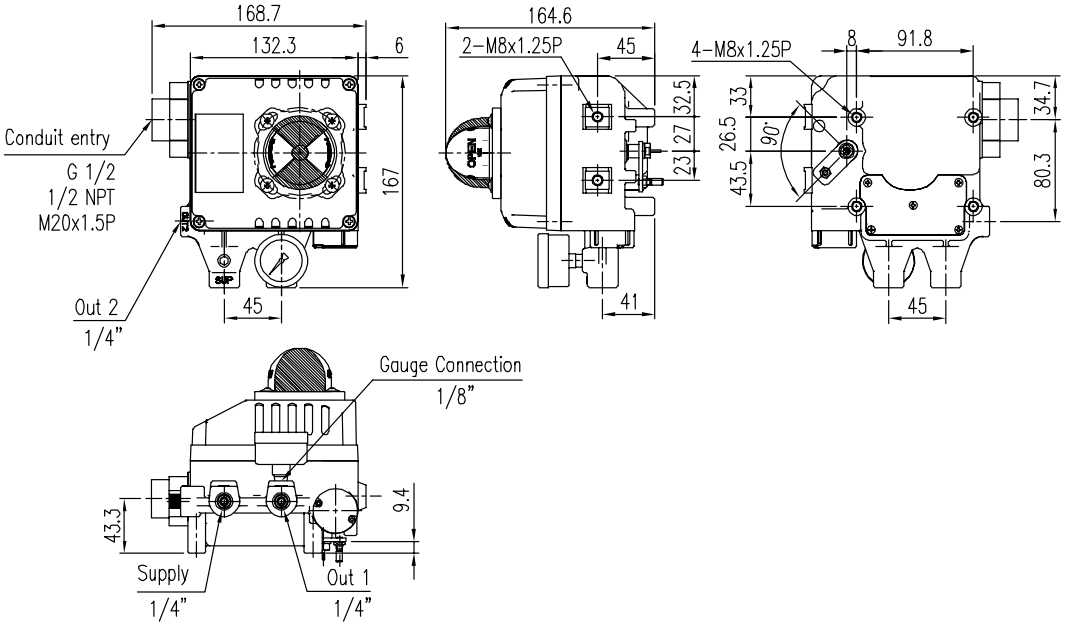

2.8.7 YT-1000R (Internal 4-20 mA Analog Output without LCD option)

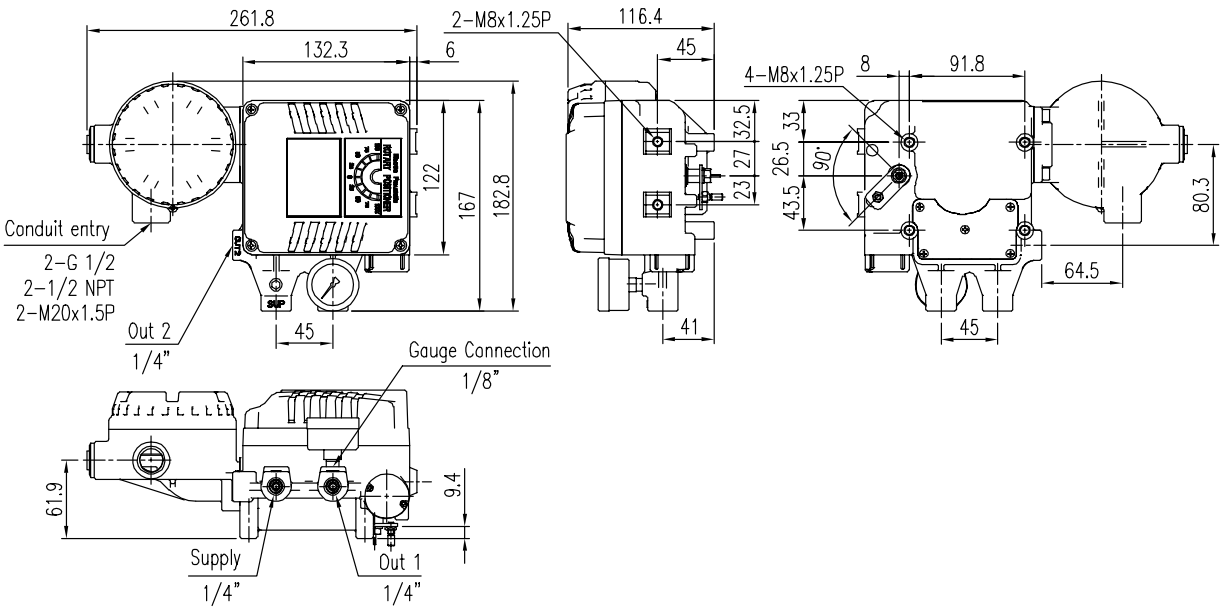

2.8.8 YT-1000R (Internal 4-20 mA Analog Output with LCD option)

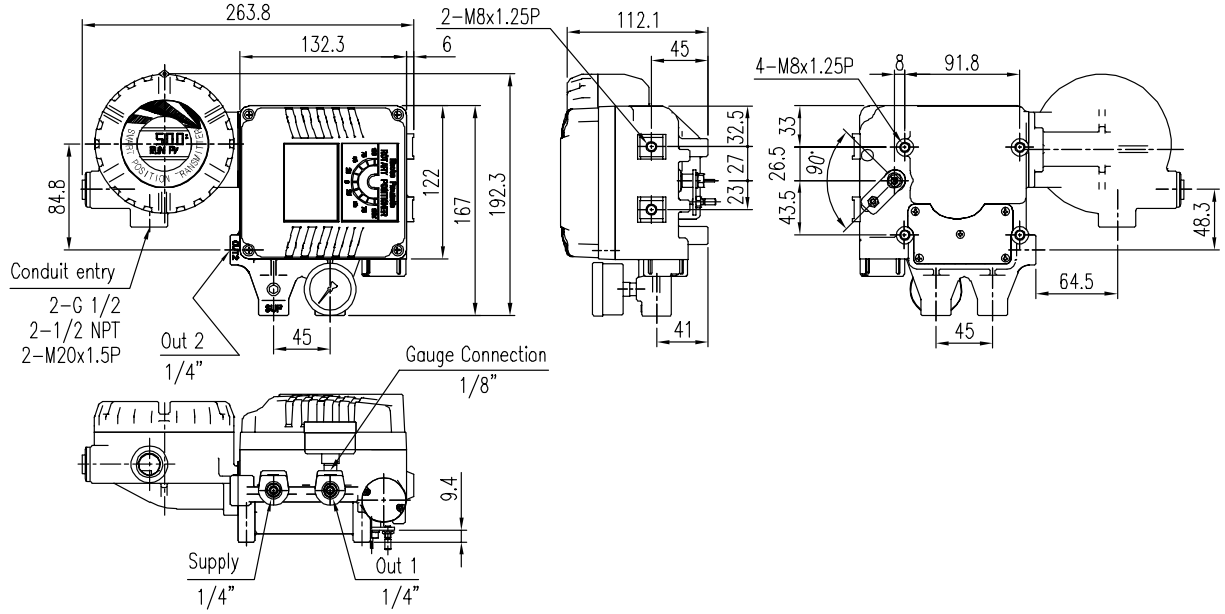

2.8.9 YT-1000R (Internal Limit Switch or Limit Switch + 4-20 mA Analog Output option)

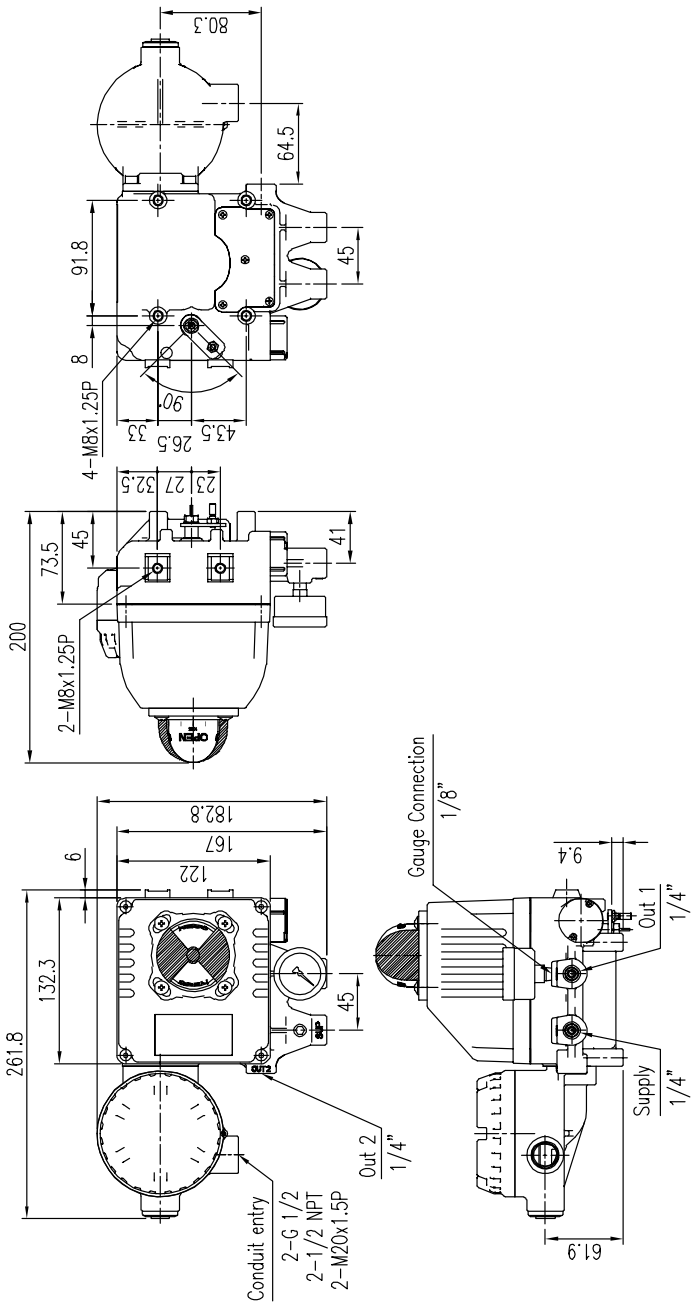

2.8.10 YT-1000R (External 4-20 mA Analog Output with LCD option, SPTM-6V)

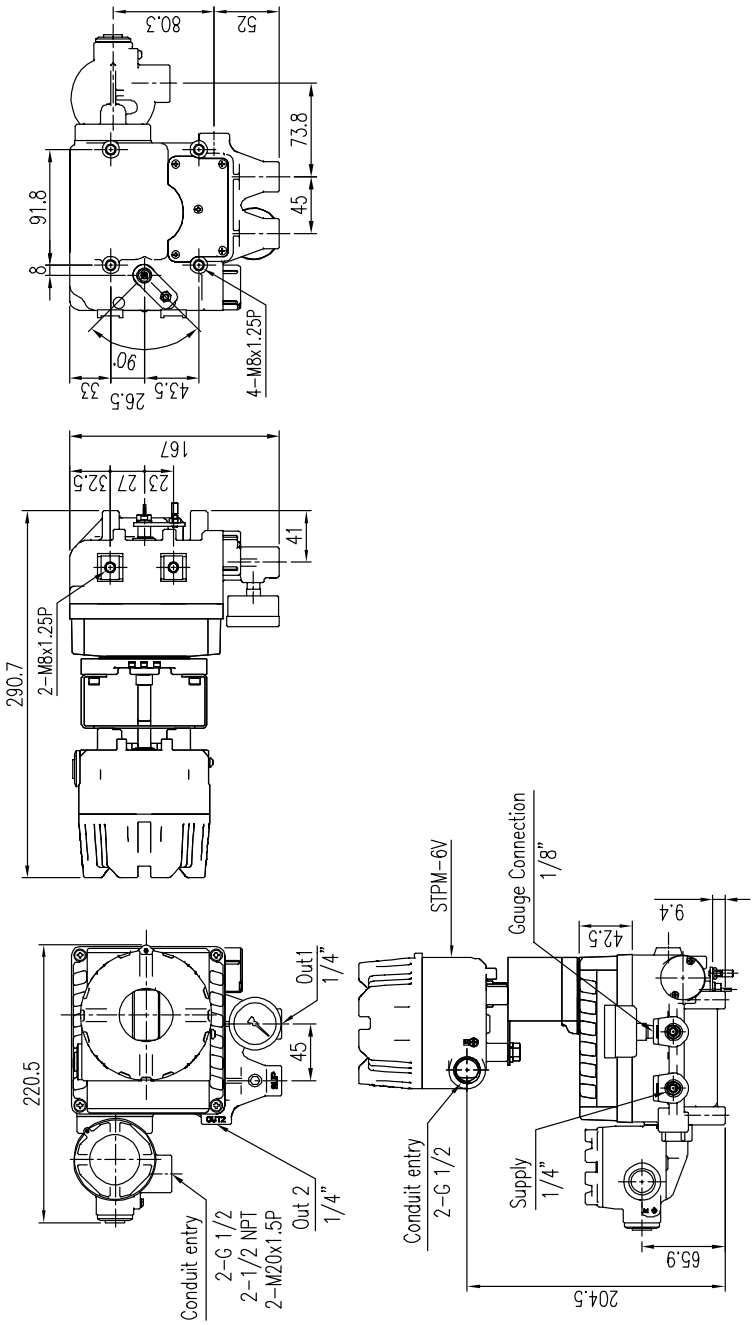

2.8.11 YT-1000R (External Limit Switch option, YT-870)

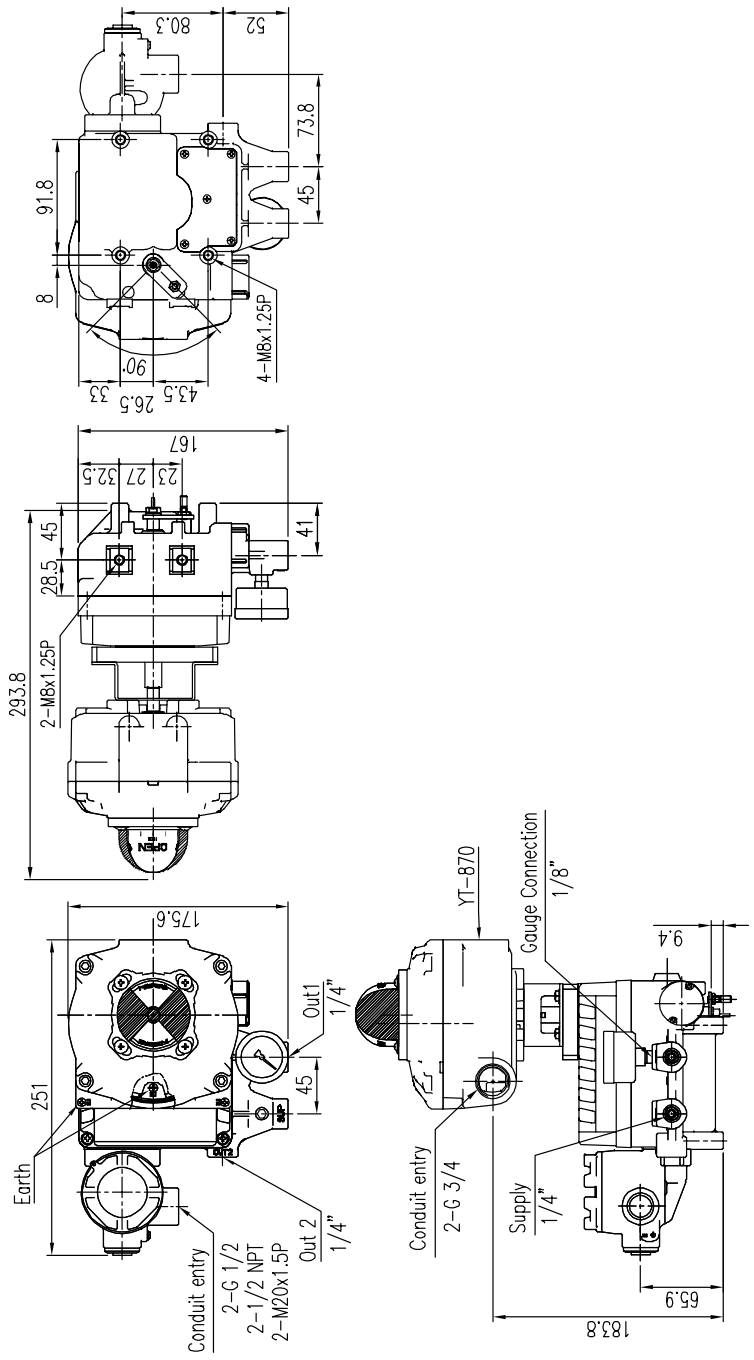

2.8.12 YT-1050L (Explosion proof construction for internal pressure type)

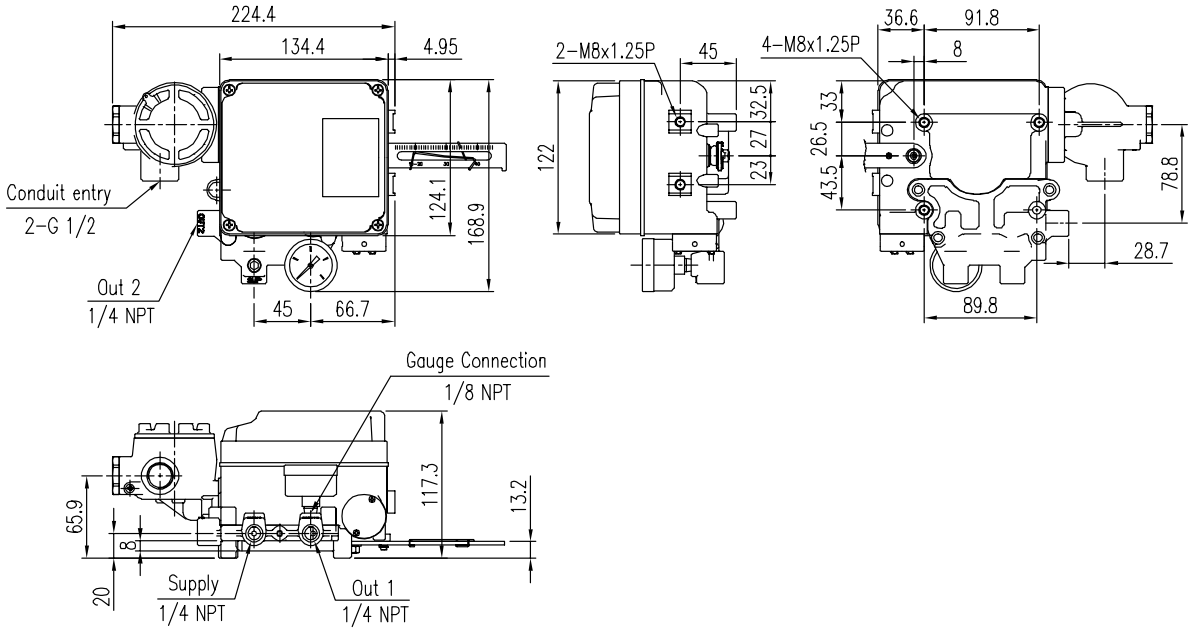

2.8.13 YT-1050R (Fork Lever type + Explosion proof construction for internal pressure)

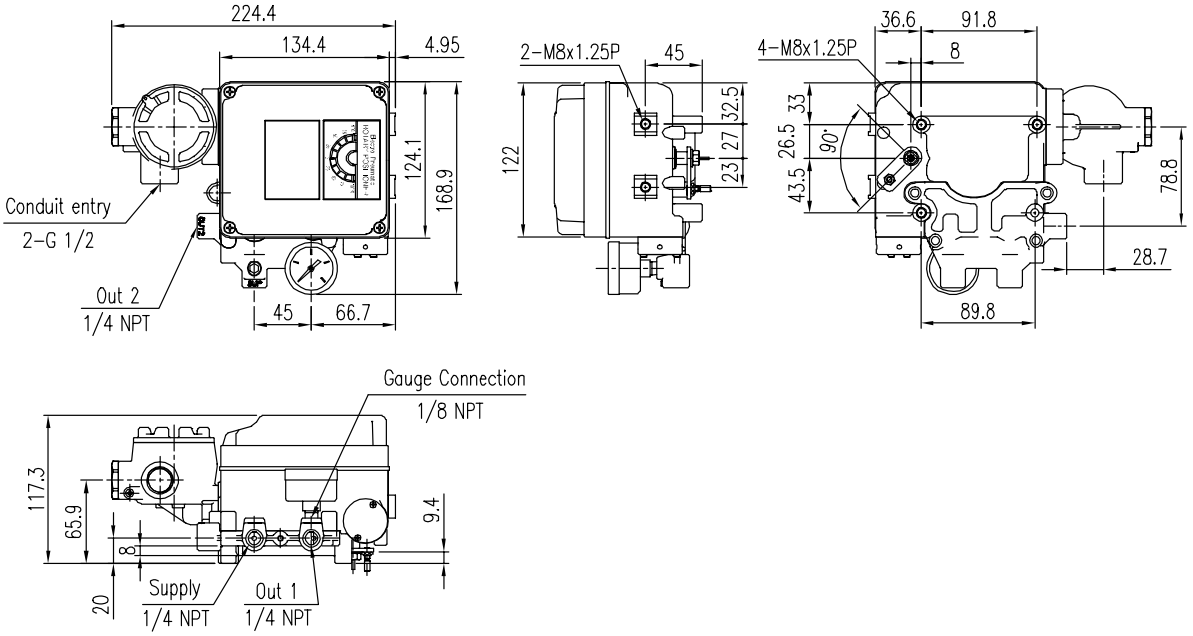

3 principle of positioner movement

3.1 Linear Positioner

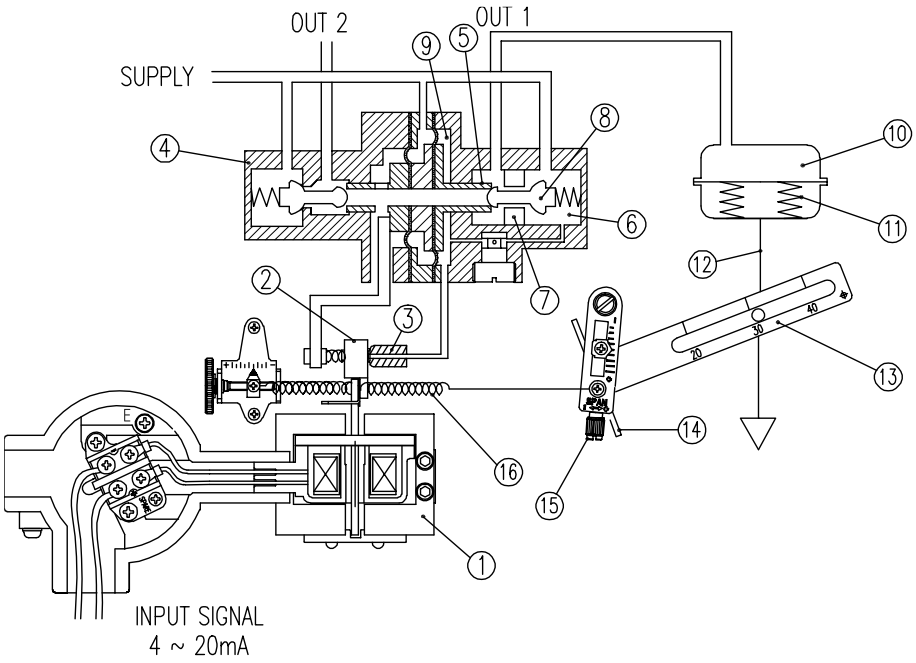

Fig. 3-1: Linear positioner with an actuator

When INPUT SIGNAL is supplied to the positioner to open the valve, power is generated from ①the torque motor and pushes ②the flapper to the opposite side of ③the nozzle. The gap between ③the nozzle and ②the flapper becomes wider and from inner part of ④the pilot, air inside ⑨the chamber is exhausted through ③the nozzle. Due to this effect, ⑤the spool moves to the right. Then the spool pushes ⑧the poppet away from ⑦the seat which was blocked by the poppet and supplied pressure (air) goes through ⑦the seat and OUT1 Port and enters into ⑩the chamber of the actuator. Then ⑩chamber's pressure will increase and when there is enough pressure inside the chamber to push ⑪the actuator's spring, ⑫actuator's stem will start to go down and through the feedback lever, stem's linear motion will be converted to span ⑭lever's rotary motion. This ⑭span lever's rotary motion will then once again rotate ⑮the span and pulls ⑯the span spring. When the valve's position reaches to given input signal, ⑯span spring's pulling force and ①torque motor's power will be balanced and move ②the flapper back its original position to reduce the gap with ③the nozzle. The amount of air being exhausted through ③the nozzle will reduce and ⑨the chamber pressure will increase again. ⑤Spool will move back to its original position on the left and ⑧the poppet will also move in same direction blocking ⑦the seat to stop the air coming into the ⑩chamber through the SUPPLY. As a result, the actuator will stop operating and the positioner will return to its normal condition.

3.2 Rotary Positioner

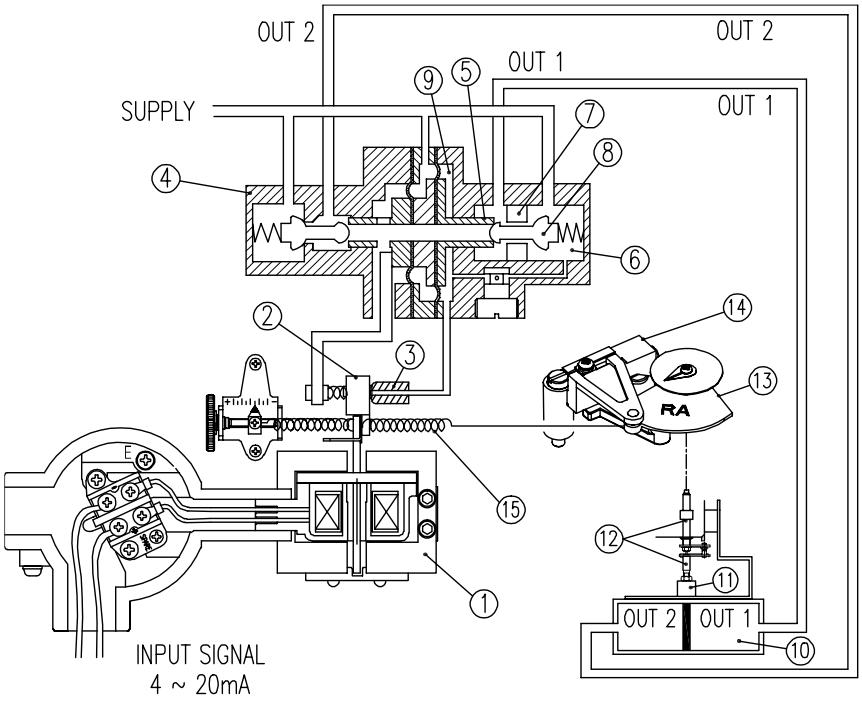

Fig. 3-2: Rotary positioner with an actuator

When INPUT SIGNAL is supplied to the positioner to open the valve, power is generated from ①the torque motor and pushes ②the flapper to the opposite side of ③the nozzle. The gap between ③the nozzle and ②the flapper becomes wider and from inner part of ④the pilot, air inside ⑨the chamber is exhausted through ③ nozzle. Due to this effect, ⑤the spool moves to the right. Then the spool pushes ⑧the poppet away from ⑦the seat which was blocked by the poppet and supplied pressure (air) goes through ⑦the seat and OUT1 Port and enters into ⑩the chamber of the actuator through OUT1. Then ⑩chamber's OUT1 pressure will increase and ⑪the actuator's stem will rotate and through ⑫the feedback shaft, actuator's rotating motion will be transferred to ⑬the cam. This motion will then rotate ⑭the span lever and pull ⑮the span's spring. Once it reaches to given input signal, ⑮span spring's pulling force and ①torque motor's power will be balanced and move ②the flapper back its original position to reduce the gap with ③the nozzle. The amount of air being exhausted through ③the nozzle will reduce and ⑨chamber pressure will increase again. ⑤Spool will move back to its original position on the left and ⑧the poppet will also move in same direction blocking ⑦the seat to stop the air coming into the ⑩chamber through the SUPPLY. As a result, the actuator will stop operating and the positioner will return to its normal condition.

4 Installation

4.1 Safety

When installing a positioner, please ensure to read and follow safety instructions.

- Any input or supply pressures to valve, actuator, and / or to other related devices must be turned off.
- Use bypass valve or other supportive equipment to avoid entire system “shut down”.
- Ensure there is no remaining pressure in the actuator.
- The positioner has a vent cover to exhaust internal air and drain internal condensation water. When installing the positioner, make sure the vent cover must be facing downward. Otherwise, the condensation water could cause corrosions and damages to internal parts.

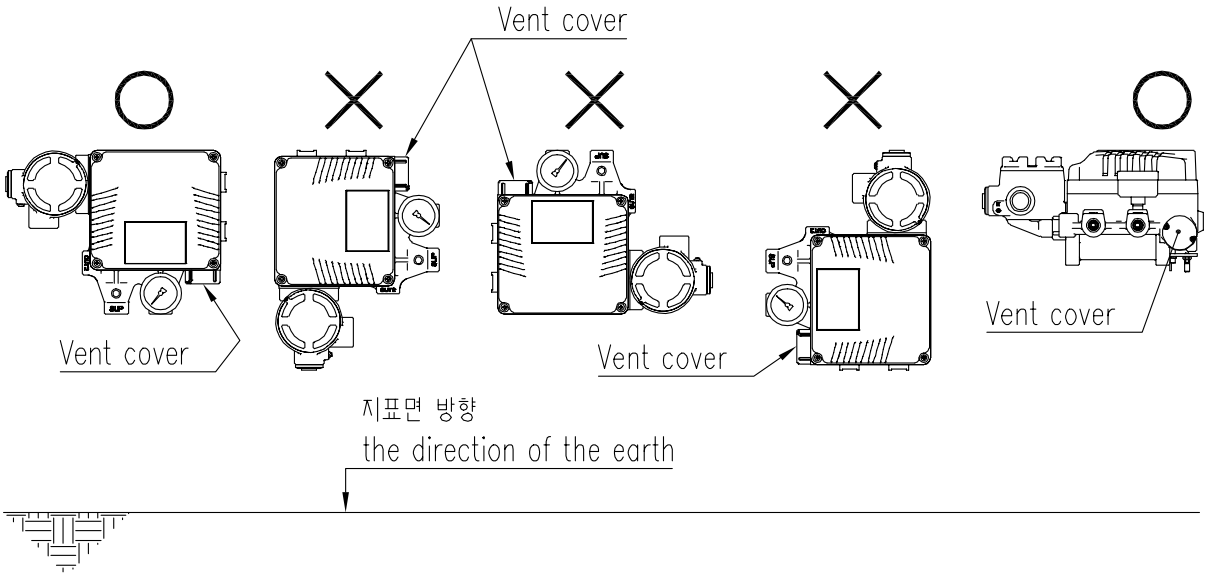

Fig. 4-1: The correct positions of a vent cover

※ Installed in accordance with the National Electrical Code(NEC), ANSI/NFPA 70, or CEC Part 1 as applicable.(FM approved product)

4.2 Tools for installation

- Hex key set for hex socket cap bolts
- (+) & (-) Screw drivers
- Spanners for hexagonal-head bolts

4.3 Linear positioner Installation

Linear positioner should be installed on linear motion valves such as globe or gate type which uses spring return type diaphragm or piston actuators.

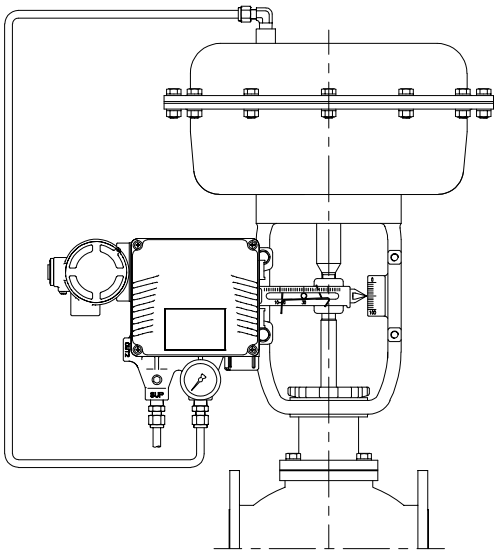

Fig. 4-2: Installation example

Before proceeding with the installation, ensure following components are available.

- Positioner
- Feedback lever and lever spring
- M6 nut and spring washer (fastening feedback lever to a main shaft)
- Bracket, bolts and washers for positioner – not supplied with the positioner
- Connection bar – not supplied with the positioner

4.3.1 Preparing Bracket for the positioner

Proper bracket must be made in order to adapt the positioner on the actuator yoke.
Please consider following important points when a bracket is being designed.

- Positioner's feedback lever must be vertical to the valve stem at 50 % of the valve stroke.
- The connection bar of the actuator clamp for the feedback lever should be installed in such a way that the valve stroke length coincides with the corresponding figure in "mm" marked on the feedback lever. Improper setting may cause poor linearity

4.3.2 Installation Steps

1) Assemble the positioner with the bracket made in previous step by fastening the bolts (M8 x 1.25P).

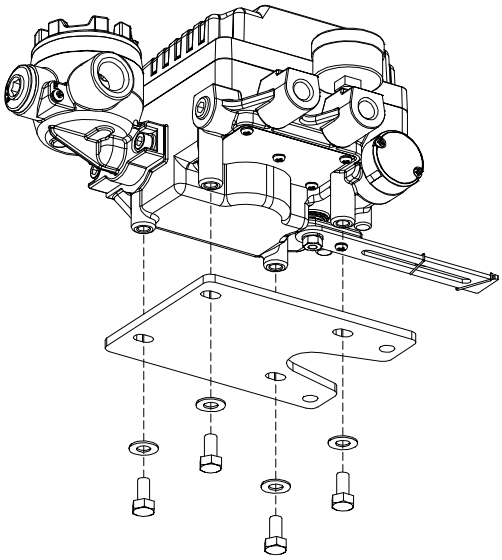

Fig. 4-3: Attaching the positioner to the bracket

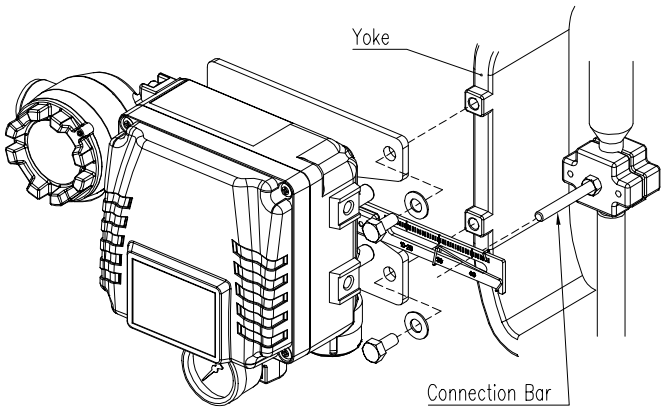

Fig. 4-4: Attaching the bracket to actuator yoke

2) Attach the positioner with the bracket to the actuator yoke
   – **DO NOT TIGHTEN THE BRACKET COMPLETELY.**

3) Connect connection bar to the actuator clamp. The hole gap on the feedback lever is 6.5 mm so the connection bar's outer diameter should be less than 6 mm.

4) Connect an air-filter regulator to the actuator temporarily. Supply enough air pressure to the actuator in order to position the valve stroke at 50 % of the total stroke.

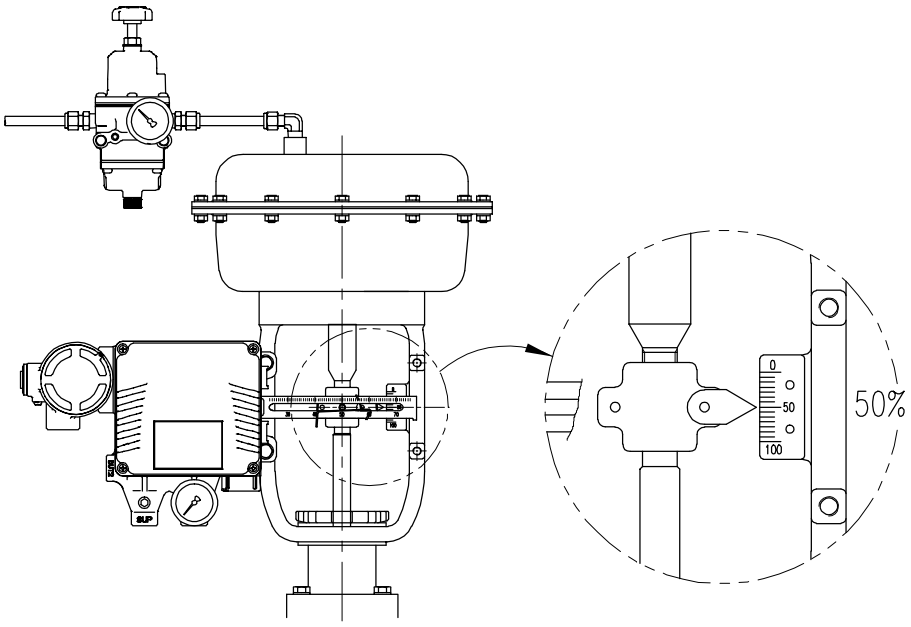

Fig. 4-5: Positioning the valve at 50 % of the total stroke

5) Insert the connection bar between the feedback lever and lever spring. The connection bar must be located upward from the lever spring as shown the below left figure. If it is located downward from the lever spring as shown the below right figure, the connection bar or the lever spring will be worn out quickly because of excessive strong tension.

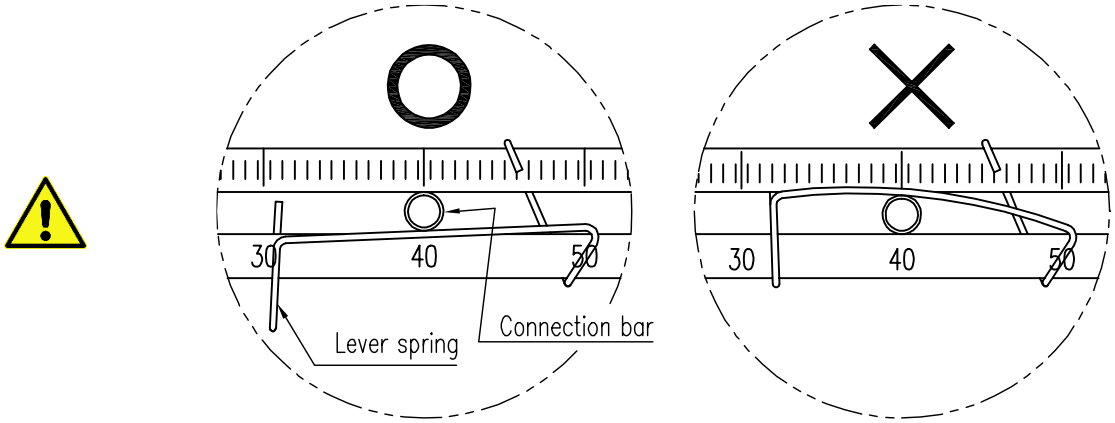

Fig. 4-6: Proper way to insert connection bar between feedback lever and lever spring

6) Check if feedback lever is vertical to the valve stem at 50 % of the valve stroke. If it is not vertical, adjust the bracket or the connection bar to make vertical. Improper installation may cause poor linearity.

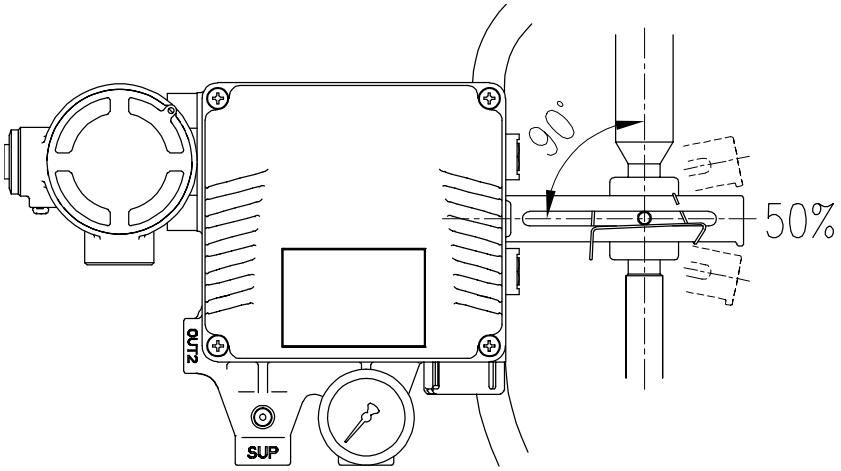

Fig. 4-7: Feedback lever and valve stem

7) Check the valve stroke. The stroke numbers are engraved on the feedback lever of the positioner. Position the connection bar at the number on the feedback lever which corresponds with the desired valve stroke. To adjust, move the bracket, the connection bar or both.

※ The effective linear lever angle is 23 degree.

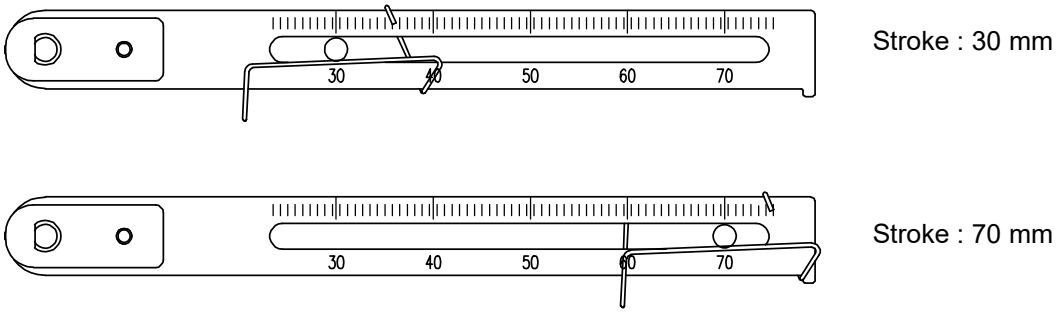

Fig. 4-8: Feedback lever and location of the connection bar

8) After installing the positioner, operate the valve from 0 % to 100 % stroke by using direct air to the actuator. On both 0 % and 100 %, the linear lever stopper should not touch the stopping bosses of positioner, which is located on the backside of the positioner. If the linear lever stopper touches the stopping bosses, the positioner should be installed further away from center of the actuator.

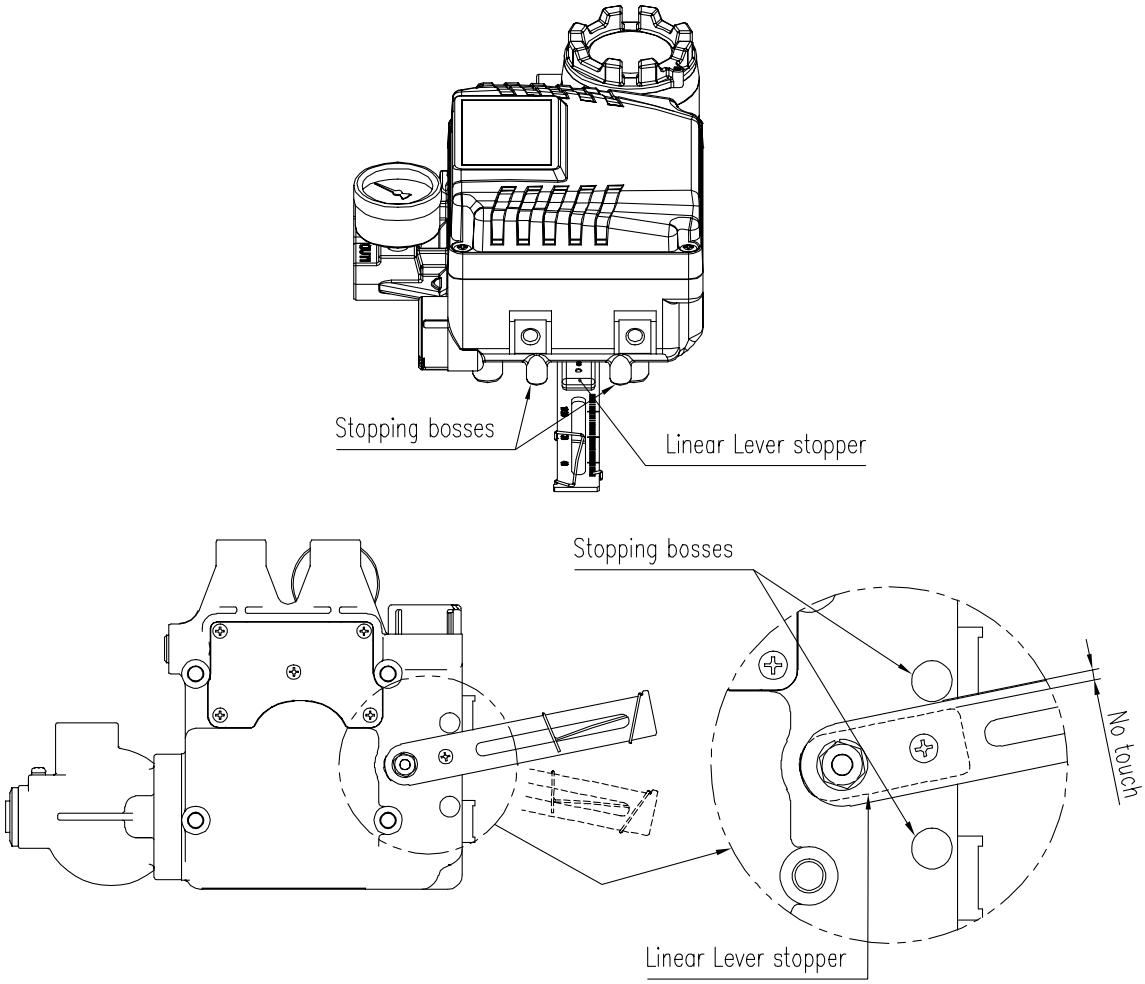

Fig. 4-9: Linear lever stopper should not touch stopping bosses of positioner on 0 % to 100 % valve stroke.

9) After the installation, tighten all of the bolts or nuts on the bracket and the connection bar.

4.4 Rotary positioner Installation

Rotary positioner should be installed on rotary motion valve such as ball or butterfly type which uses rack and pinion, scotch yoke or other type of actuators which its stem rotates 90 degrees. Before proceeding with the installation, ensure following components are available.

4.4.1 Components

- Positioner
- Fork lever (Only Fork lever type)
- Rotary bracket set (2 pieces)
- 4 pcs x hexagonal headed bolts (M8 x 1.25P x 15L) : For the positioner and the upper bracket
- 4 pcs x M8 plate washers : For the positioner and the upper bracket
- 4 pcs x wrench headed bolts (M6 x 1P x 15L) : For the brackets
- 4 pcs x M6 nuts : For the brackets
- 4 pcs x M6 spring washers : For the brackets
- Bolts and washers to attach the lower bracket to actuator – not supplied with the positioner

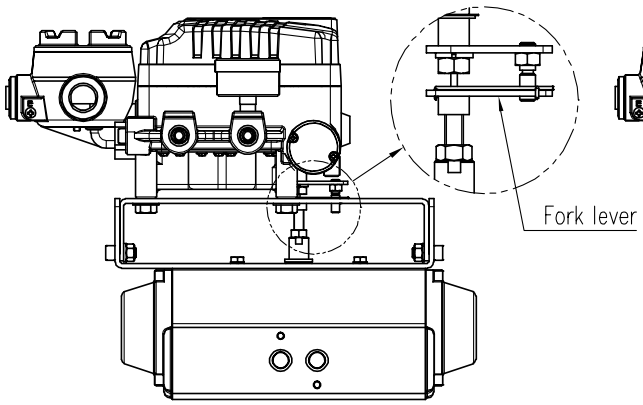

Fig. 4-10: Fork lever type

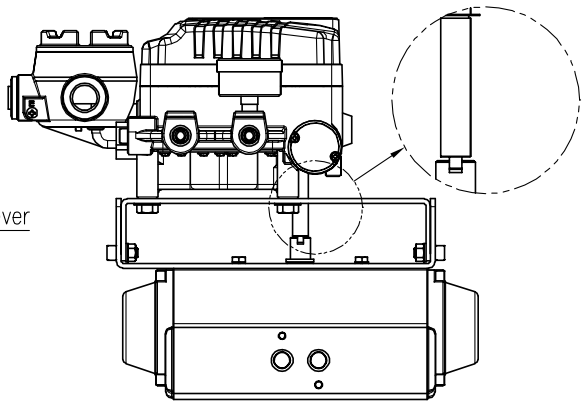

Fig. 4-11: Namur type

4.4.2 Rotary Bracket Information

The rotary bracket set(included with the positioner) contains two components. The bracket is designed to fit onto the actuator with 20 mm, 30 mm and 50 mm stem height (H) according to VDI/VDE 3845 standard. Please refer to below figures how to adjust the height of the bracket.

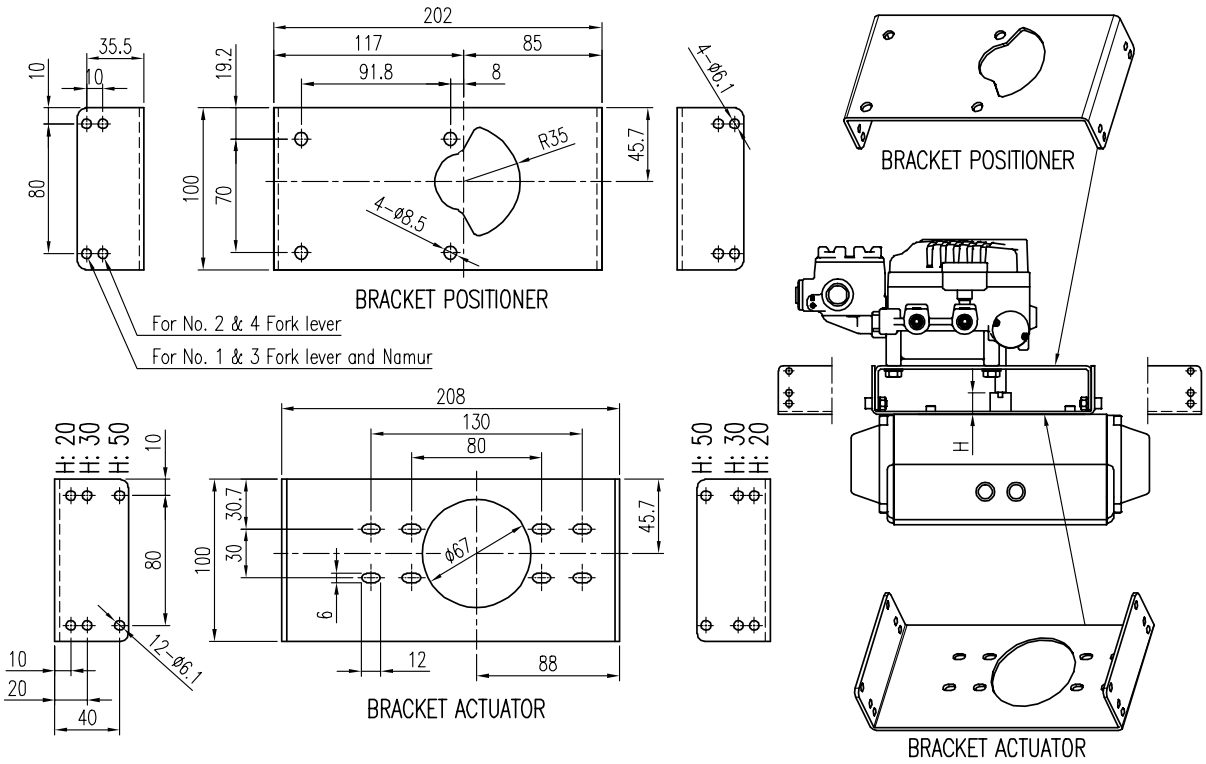

Fig. 4-12: Brackets and positioner

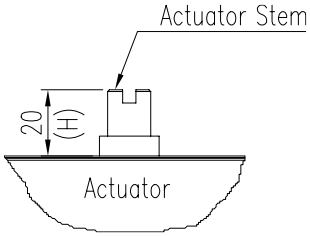

Fig. 4-13: Actuator stem Height

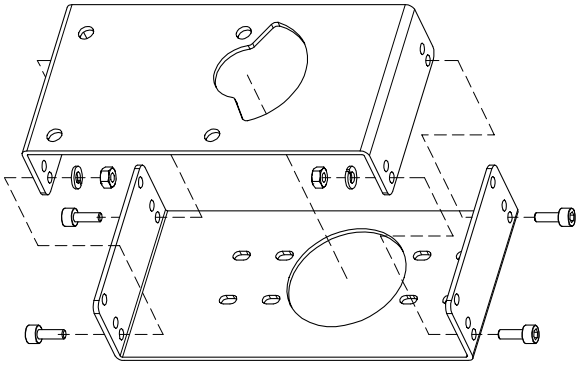

Fig. 4-14: Rotary Brackets Assembly

4.4.3 Rotary positioner Installation Steps

1) Please check the actuator's stem height and adjust the brackets by referring to the above bracket figures.

2) Attached the brackets onto the actuator. It is recommended to use spring washer so the bolts will not be loosen from vibration.

3) Set rotation position of the actuator stem at 0 %. For single acting actuator, it is easy to check 0 % point by supplying no pressure to the actuator. For double acting actuator, check actuator stem's rotation direction – clockwise or counter-clockwise - by supplying pressure to the actuator.

4) (Only Fork lever type) Install the fork lever after setting actuator's stem at 0 %. Check the actuator stem's rotation direction – clockwise or counter-clockwise.
Installation angle of the fork lever should be 45˚ to the longitudinal direction of the actuator.

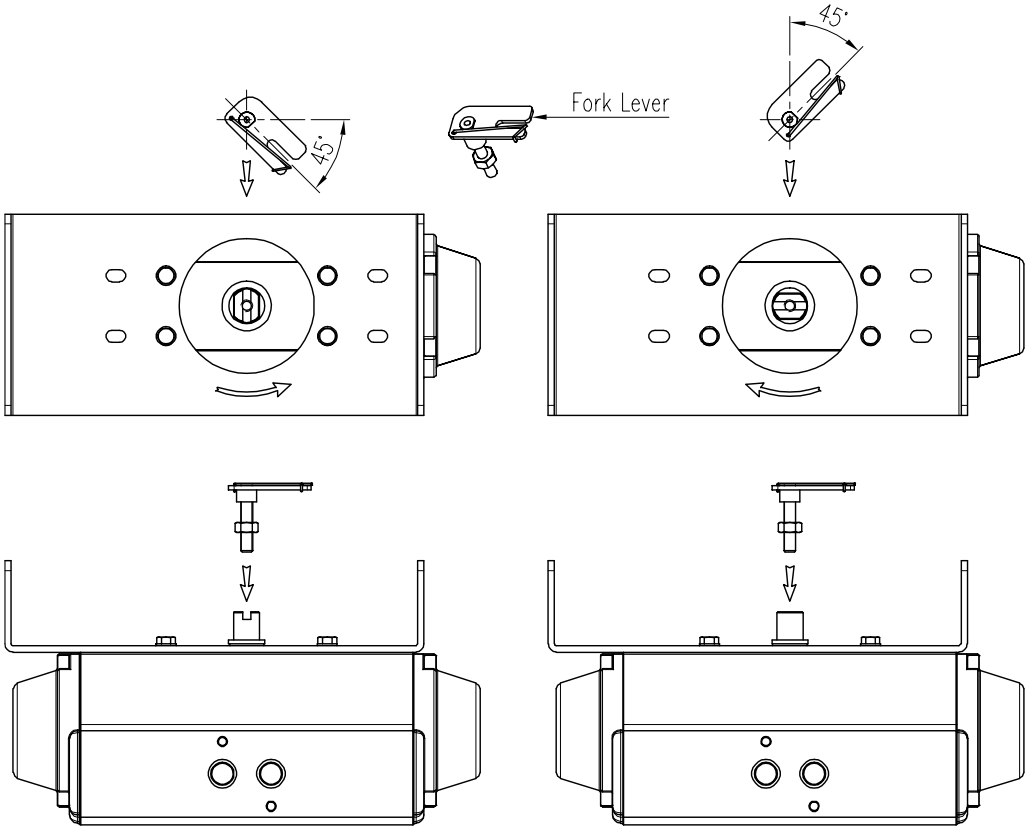

Fig. 4-15: Counter-clockwise and clockwise rotation.

5) (Only Fork lever type) After determining fork lever direction, adjust F between the top plate of fork lever and the top face of actuator as below table. Fasten lock nuts which are located on the bottom of the fork lever.

H	F (only No. 1 & 3 fork lever)
20	About 44
30	About 54
50	About 74

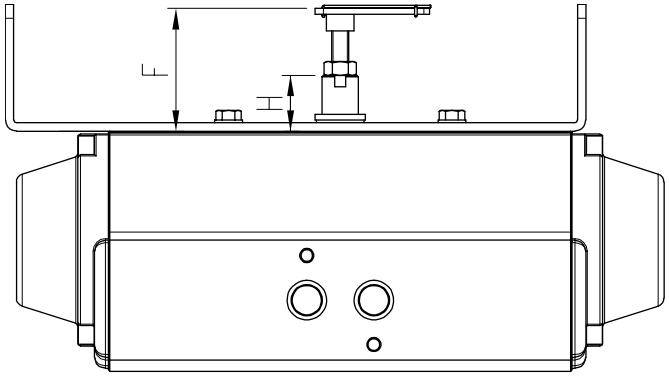

Fig. 4-16: Height of fork lever

6) Attach the positioner to the bracket. <*Only fork lever type : Fix the clamping pin (5 mm Dia.) into the fork lever slot and insert center pin (2 mm Dia.) of the main shaft of the positioner into the hole of center of the fork lever. The clamping pin will be locked to the fork lever spring.*> Setting alignment of center of main shaft of the positioner and center of the actuator's stem is very important. Poor alignment of the main shaft and the actuator's stem decreases the positioner's durability due to unnecessary forces on the main shaft.

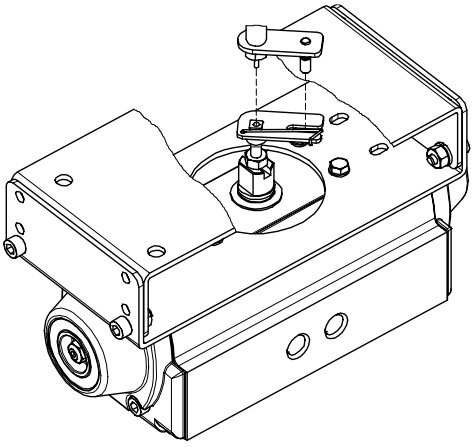

Fig. 4-17: Main shaft center alignment (Fork lever)

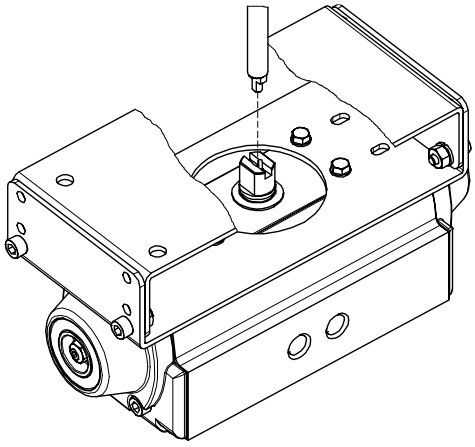

Fig. 4-18: Main shaft center alignment (Namur)

7) Tighten the positioner and the bracket with bolts **after checking the positioner's position.**

5 Connection - Air

5.1 Safety

- Supply pressure should be clean and dry air – avoiding moisture, oil and dust.
- Always recommended to use air filter regulator (i.e. YT-200 series).
- Rotork YTC Limited **has not tested positioner's operation with any other gases other than clean air. Please contact Rotork YTC Limited for any questions.**

5.2 Supply Pressure Condition



- Dry air with dew point of at least 10 °C lower than ambient temperature.
- Avoid from dusty air. Use 5 micron or smaller filter.
- Avoid oil.
- Comply with ISO 8573-1 or ISA 7.0.01.
- Supply pressure range is 0.14 to 0.7 MPa (1.4 to 7 bar)
- Set air filter regulator's pressure level 10% higher than actuator's spring range pressure.

5.3 Piping Condition



- Ensure inside of pipe is clean of obstructions.
- Do not use pipeline that is squeezed or shows any type of damamges.
- Pipeline should have more than 6 mm of inner diameter (10 mm outer diameter) to maintain flow rate.
- The length of pipeline system should not be extremely long. Longer pipeline system may affect flow rate due to the friction inside of the pipeline.

5.4 Connection – Piping with actuator

5.4.1 Single acting actuator

Singe acting type positioner is set to use only Out1 port. Out1 port of positioner should be connected with port of actuator when using spring return actuator of single acting type.
As input signal ampere increases, the supply air pressure will be supplied through Out1 port.

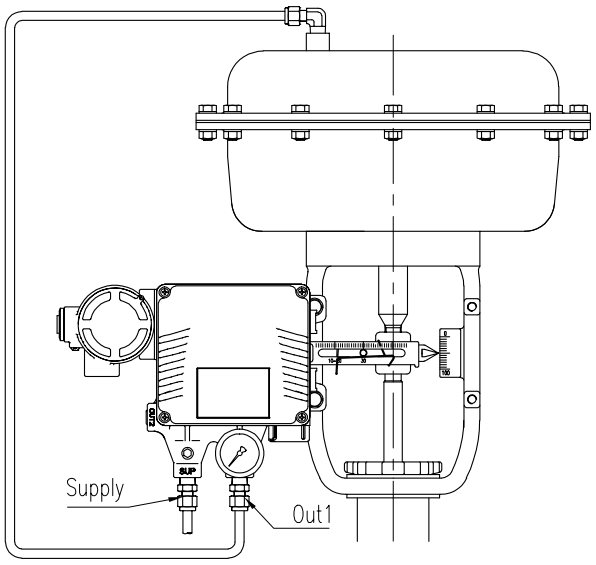

Fig. 5-1: Single acting linear actuator

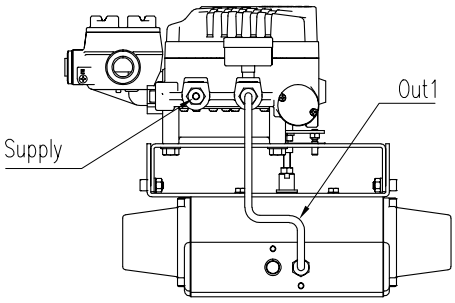

Fig. 5-2: Single acting rotary actuator

Refer to below diagram and check whether if the valve is a “Reverse Acting” or “Direct Acting”. Then connect positioner’s Out1 port to the proper actuator’s port and in case of need, switch the assembly position of the Span (Linear) and Cam (Rotary).

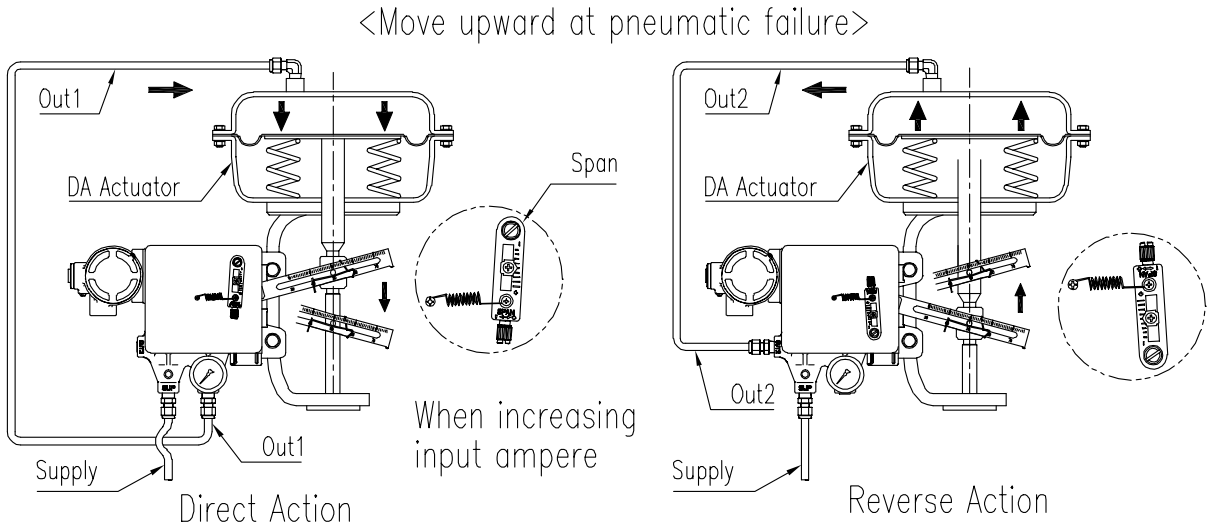

Fig. 5-3: Setting directions of piping and span for linear DA single actuator

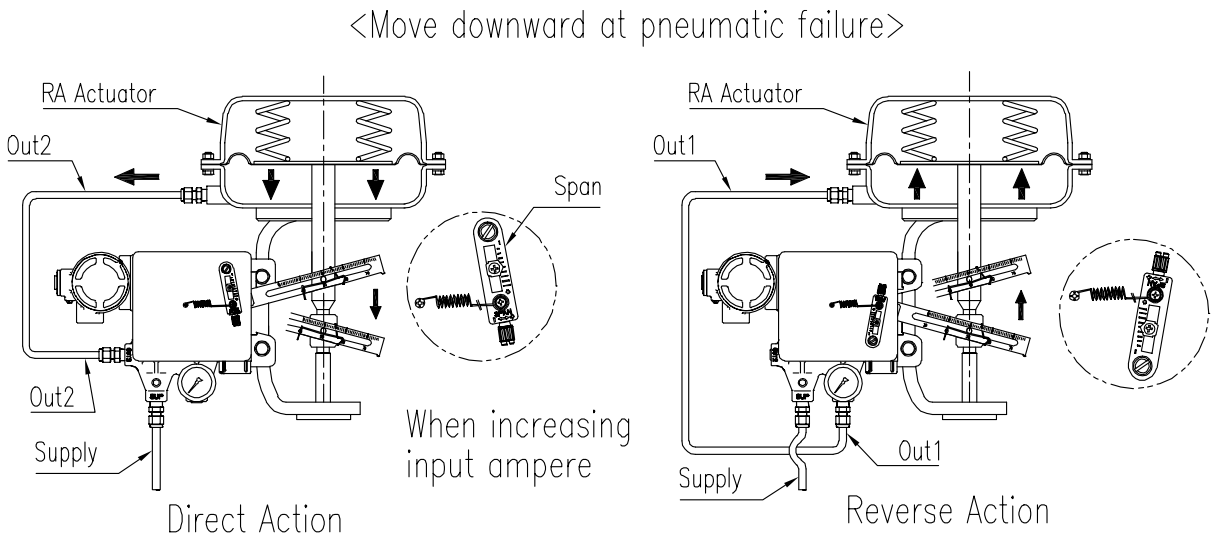

Fig. 5-4: Setting directions of piping and span for linear RA single actuator

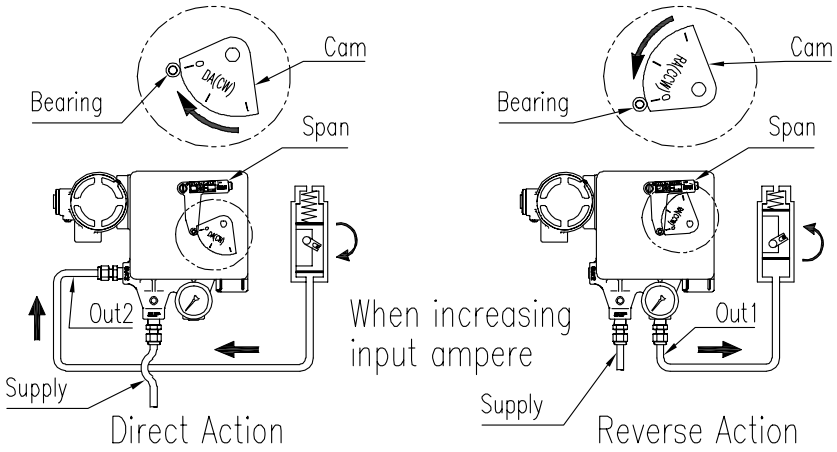

Fig. 5-5: Setting directions of piping and cam for rotary single actuator

5.4.2 Double acting actuator

Double acting type positioner is set to use both Out1 and Out2 port. As input signal increases, the supply pressure will be supplied through Out1 of positioner to actuator and the exhausting air from actuator will be exhausted through Out2 of positioner.

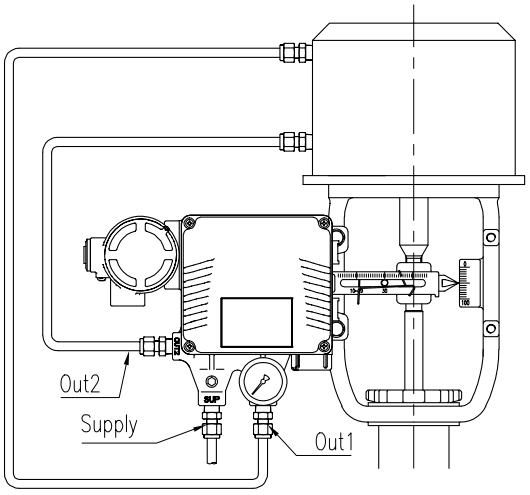

Fig. 5-6: Double acting linear actuator

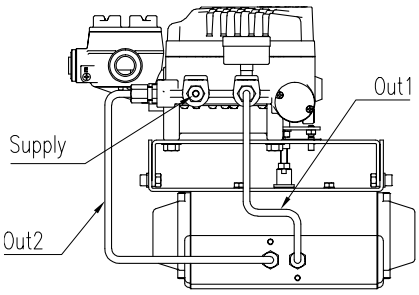

Fig. 5-7: Double acting rotary actuator

Refer to below diagram and check if the valve is a “Reverse Acting” or “Direct Acting”. Then connect positioner’s Out1 port to the proper actuator’s port and in case of need, switch the assembly position of the Span (linear) and Cam (Rotary).

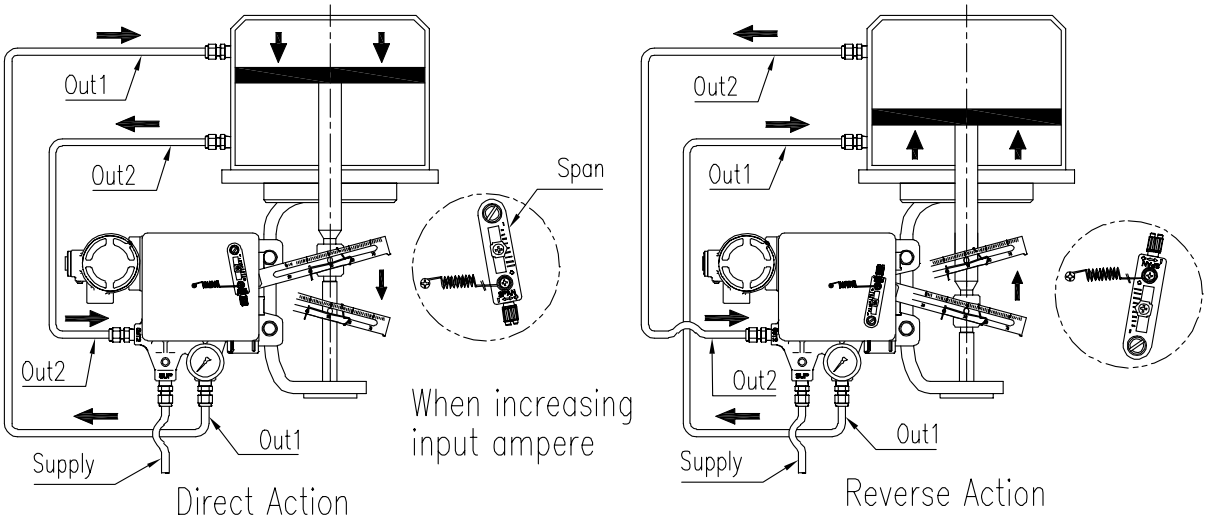

Fig. 5-8: Setting directions of piping and cam for linear double actuator

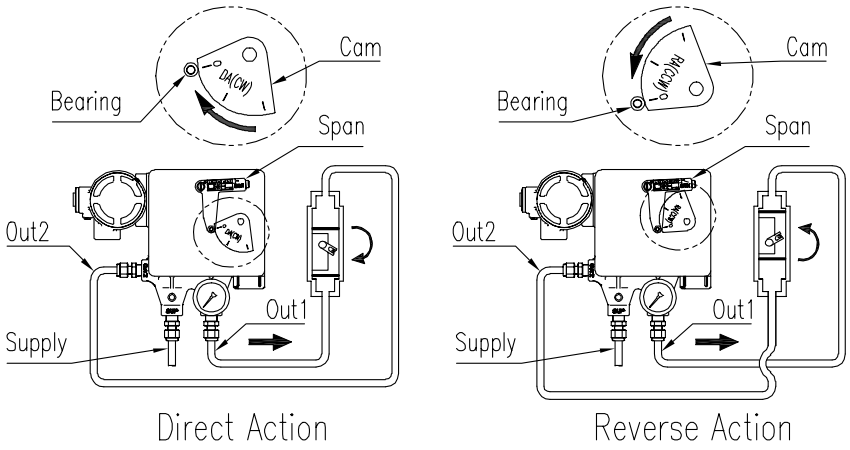

Fig. 5-9: Setting directions of piping and cam for rotary double actuator

6 Connection – Power

6.1 General

- There are one or two conduit entries on the positioner. See “2.4 Product Code for Conduit entry treads.
- Positioner usually uses 4-20 mA DC.
- Positioner with 4-20 mA Analog Output options must be supplied with 9 to 28 V DC separately.
- Positioner should be grounded.
- Please do not install the cable near high noise equipment, such as high-capacity transformer or motor.
- To maintain Type 4X and IP66 rating, when installing threaded conduit, use type PTFE tape according to instructions.

6.2 Flameproof enclosure type

6.2.1 Safety

- When installing in hazardous and explosive gas area, conduit tube or pressure-proof packing union must be used. The compound charging box should be the flameproof type and must be sealed completely.
- Before connecting terminal, ensure that the power is off completely. **Do not open the cover when the power is still alive.**
- Please use ring terminal to protect against vibration or any other external impact.
- Please use twisted cable with conductor section are 1.25 mm^2 and that is suitable for 600 V (complying with the conductor table of NEC Article 310). The outer diameter of the cable should be between 6.35 to 10 mm. Use shield wire to protect against electro-magnetic field and noise.

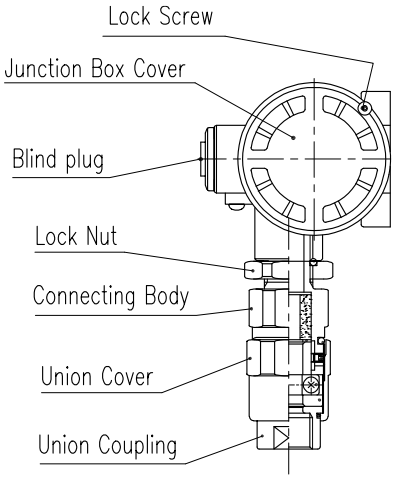

Fig. 6-1: Pressure-proof packing union

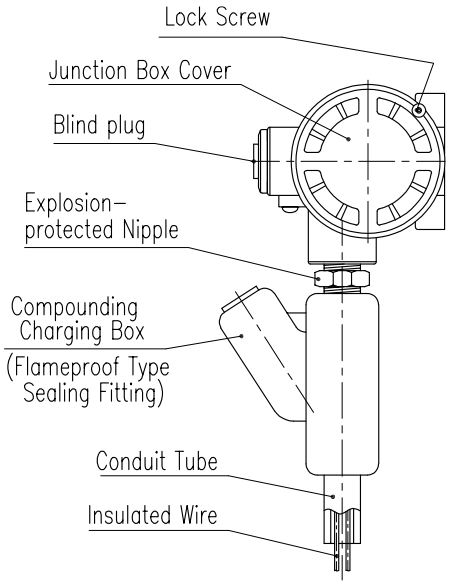

Fig. 6-2: Flame proof type compound charge box

6.2.2 Connection

1) Unscrew M3 set screw from the junction box and open the junction box cover.
2) Connect external wires with ring terminals to corresponding polarities within the junction box terminal block. To avoid poor contacts, make sure all bolts on the terminal block are tightened.
3) Close and fix the junction box cover by tightening all M3 set screws.

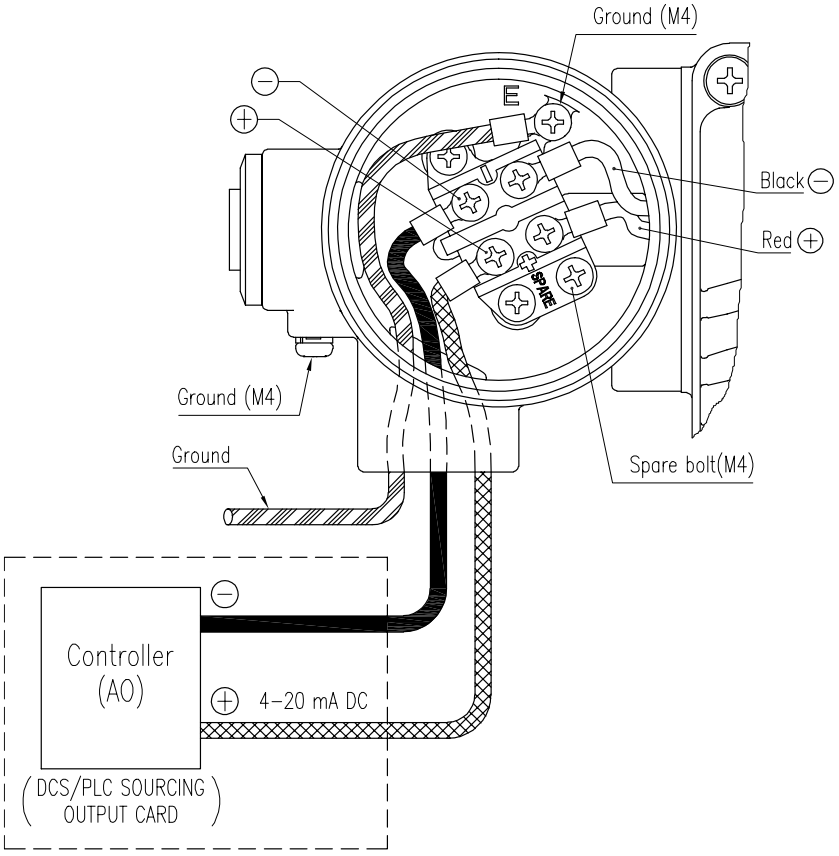

Fig. 6-3: Connecting cables

6.3 Intrinsic safety type

Distinguish Intrinsic safety type circuit from Non-Intrinsic safety type circuit and separate it from any other electric circuits.

6.3.1 Connection

1) Open the cover base of the positioner.
2) Connect external wires to corresponding polarities on the terminal block located at top left corner. To avoid poor contacts, make sure all bolts on the terminal block are tightened.

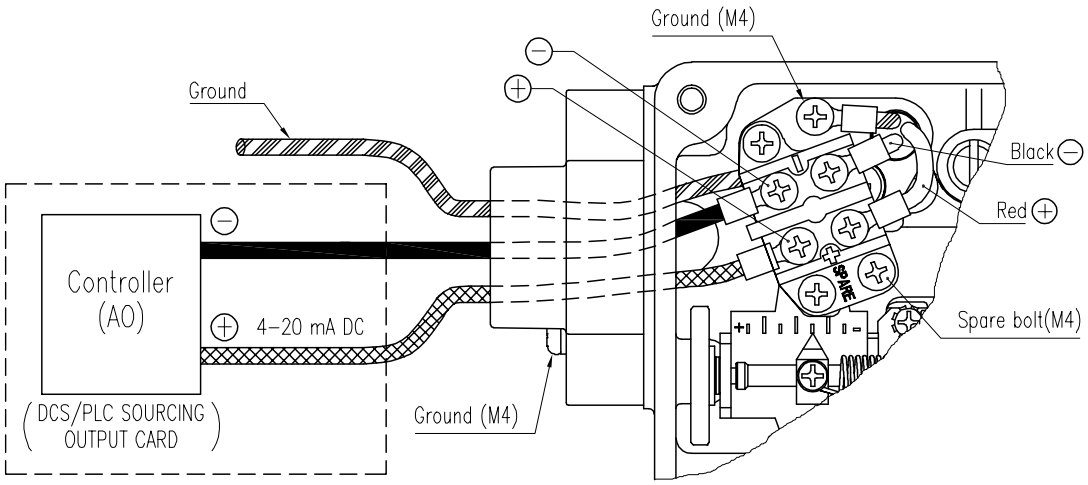

Fig. 6-4: Connecting cables

6.4 Internal 4-20 mA Analog Output (Without LCD) option

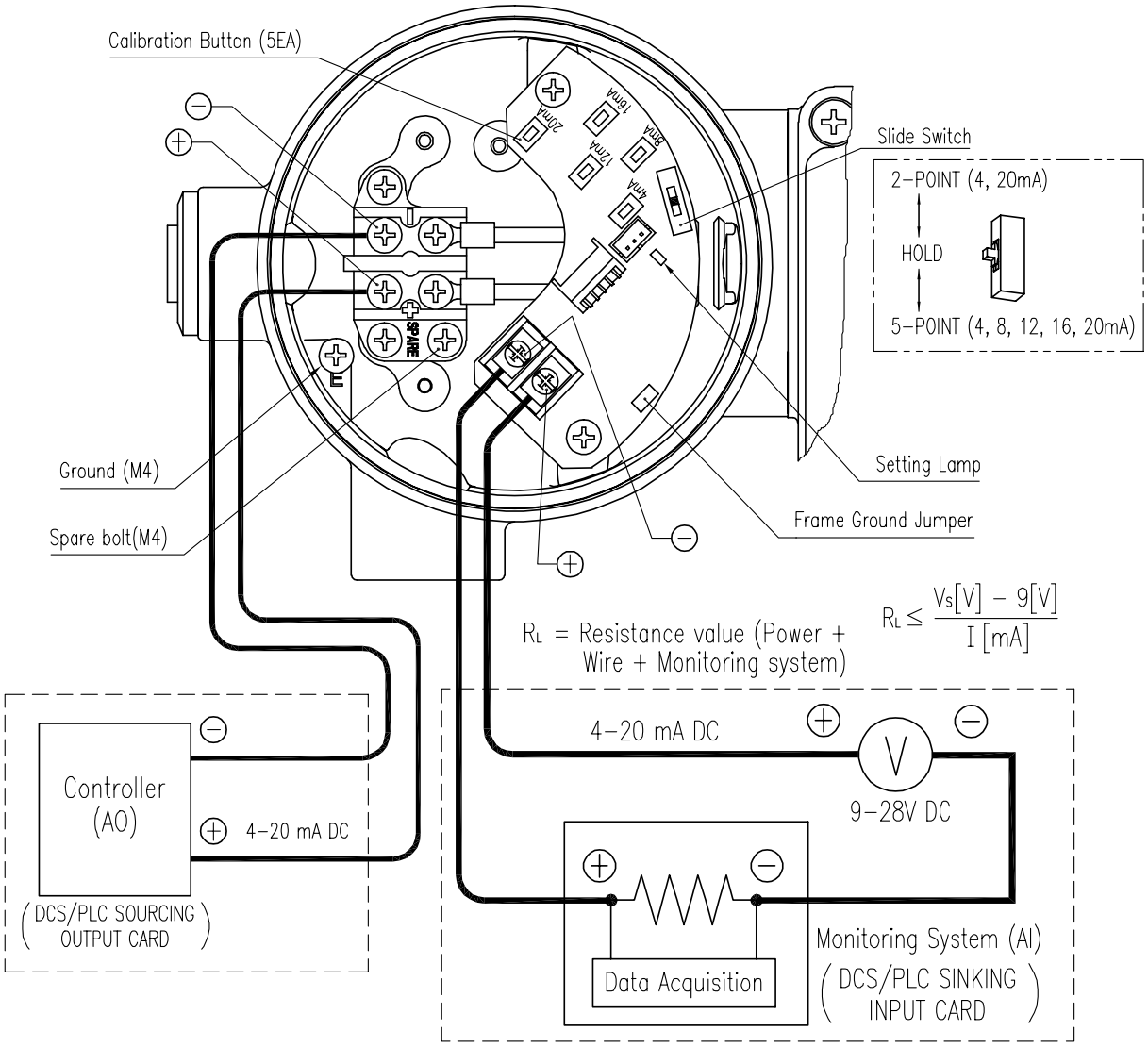

Fig. 6-5: Connecting cables

6.4.1 Slide Switch

(3 point position type, but old type slide switch was 2 point position type.)

Position Transmitter can be calibrated by 2 or 5 points setting. The slide switch has 3 positions as below.

1) 2-Point position:

By setting only zero and end points (0 % and 100 % of valve stroke), the outputs can be set accordingly. When zero and end points are set, 25 %, 50 %, 75 % points are automatically calibrated.

2) 5-Point position:
By setting 5 points (0 %, 25 %, 50 %, 75 %, and 100 %), the outputs can be set accordingly. Different from 2-point setting, 5 point setting allows the end user to set 0 %, 25 %, 50 %, 75 %, 100 % to their desired positions. All 5 points should be set when using this position.

3) Set Off position: (Old PCBs with two position slide switch does not have this position.)
If the slide switch is in this position, calibration setting cannot be adjusted. This position is used to prevent the set-values from changing when the user mistakenly press the buttons after calibration has been completed. Only calibration setting is restricted from this position and all other adjustments can be done.

6.4.2 Buttons

Position Transmitter has 5ea buttons

1) 4mA button:
The button is used when setting 0 % position of full stroke during calibration. Position the valve at 0 %, press and hold the button for 2 seconds and the lamp will flash twice quickly. Release the button, and then the lamp will flash three times quickly again to confirm that the new setting has been saved.

2) 8mA button :
The button is used when setting 25 % position of full stroke during calibration. Position the valve at 25 %, press and hold the button for 2 seconds and the lamp will flash twice quickly. Release the button, and then the lamp will flash three times quickly again to confirm that the new setting has been saved.

3) 12mA button:
The button is used when setting 50 % position. Position the valve at 50 %, press and hold the button for 2 seconds and the lamp will flash twice quickly. Release the button, and then the lamp will flash three times quickly again to confirm that the new setting has been saved.

4) 16mA button:
The button is used when setting 75 % position of full stroke during calibration. Position the valve at 75 %, press and hold the button for 2 seconds and the lamp will flash twice quickly. Release the button, and then the lamp will flash three times quickly again to confirm that the new setting has been saved.

5) 20mA button:

The button is used when setting 100 % position of full stroke during calibration. Position the valve at 100 %, press and hold the button for 2 seconds and the lamp will flash twice quickly. Release the button, and then the lamp will flash three times quickly again to confirm that the new setting has been saved.

6.5 Internal 4-20 mA Analog Output (With LCD) option

- Refer to product manual of SPTM-6V or SPMT-5V to calibrate the position transmitter.

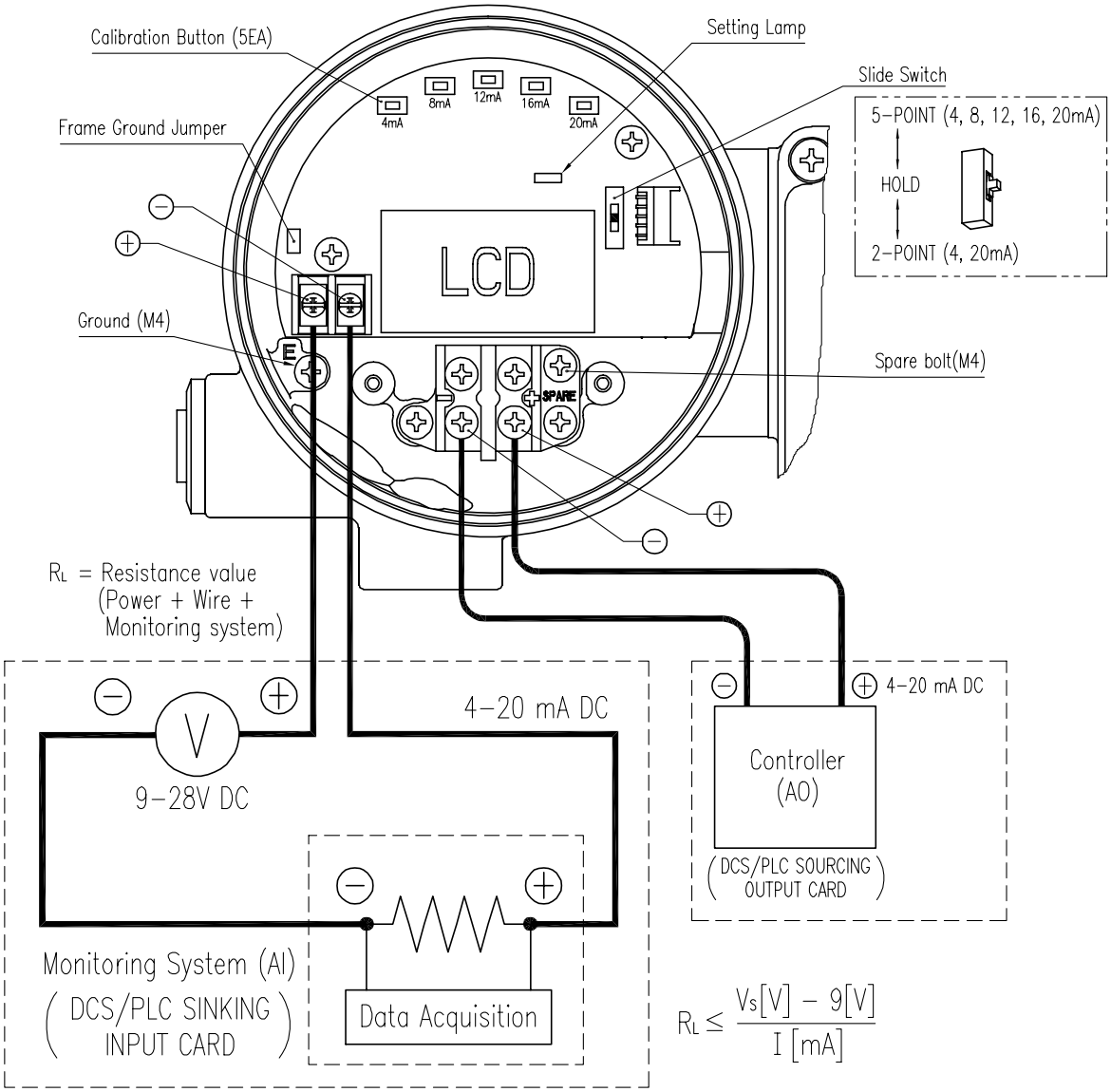

Fig. 6-6: Connecting cables

6.6 Internal L/S + 4-20 mA Analog Output option (Without LCD)

- Refer to above 6.4.1 and 6.4.2 to calibrate the position transmitter.

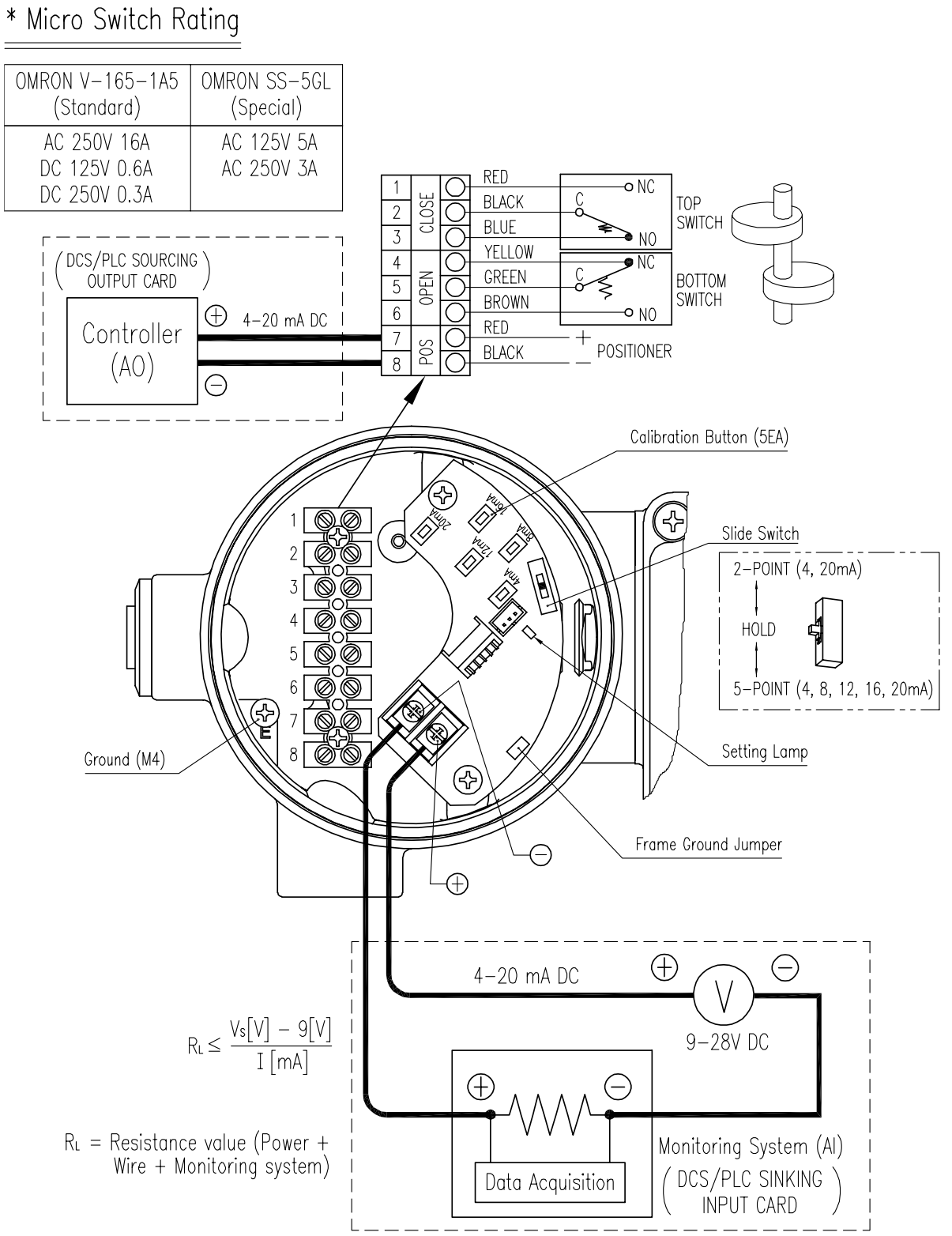

Fig. 6-7: Connecting cables

7 Adjustments

7.1 Ra or Da Setting

7.1.1 Linear Positioner

1) If the actuator axis moves down when input signal is increased, assemble the “Span” to upper M6 Tap hole like the below figure.(DA)

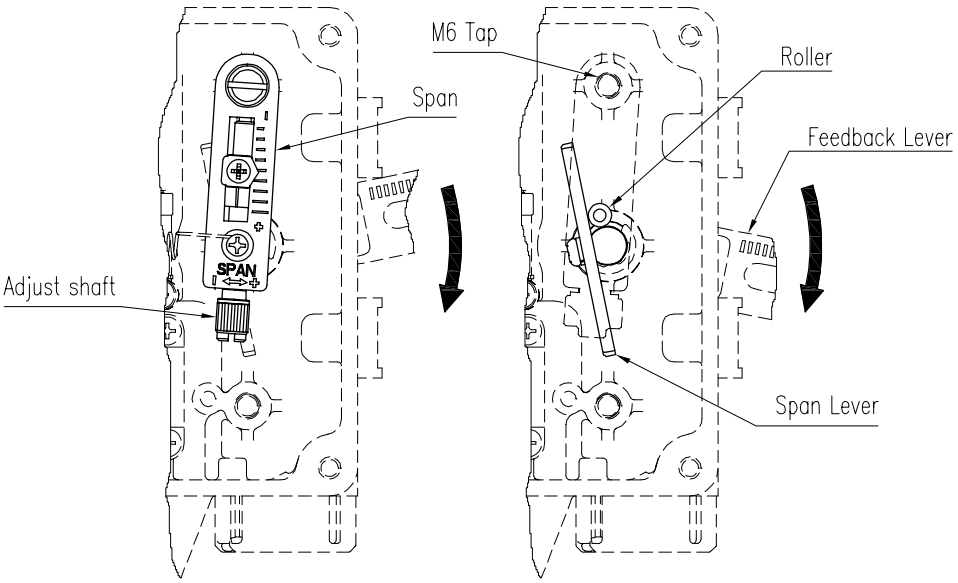

Fig. 7-1: Span Installation (DA)

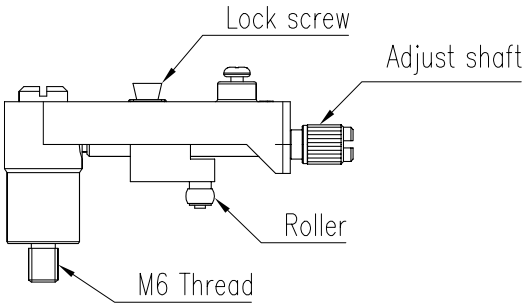

Fig. 7-2: Linear span assembly

2) If the actuator axis moves up when input signal is increased, assemble the “Span” to lower M6 Tap hole like the below figure.(RA)

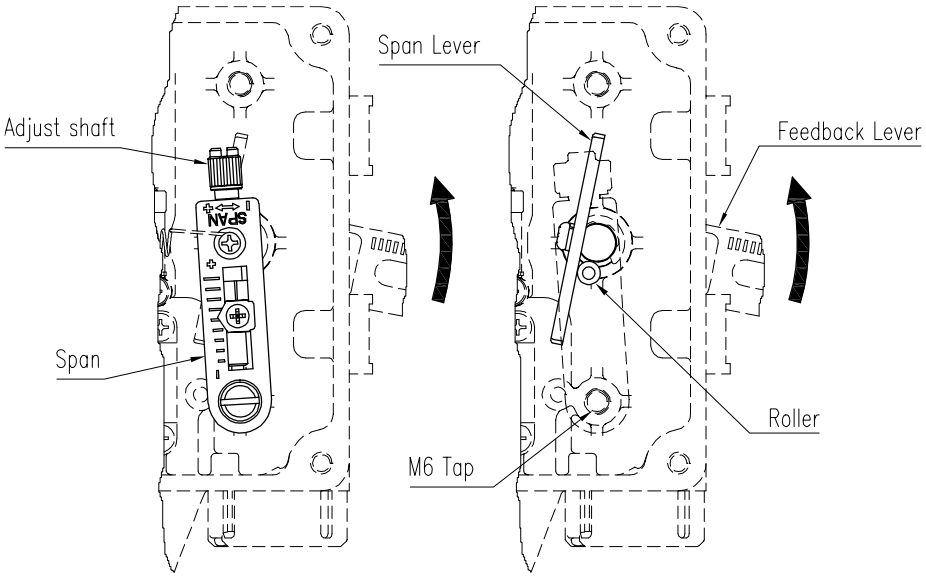

Fig. 7-3: Span Installation (RA)

7.1.2 Rotary positioner

1) If the actuator axis rotates clockwise when input signal is increased, in case of need, re-assemble the CAM so that “DA(Direct Acting)” lettered surface is facing upward.
2) If the actuator axis rotates counter-clockwise when input signal in increased, in case of need, re-assemble the CAM so that “RA(Reverse Acting)” lettered surface is facing upward.
3) Position the actuator to initial point.
4) Adjust the CAM so that the engraved CAM reference line marked with “0” is placed in the center of the span bearing and fix it by tightening the nut.

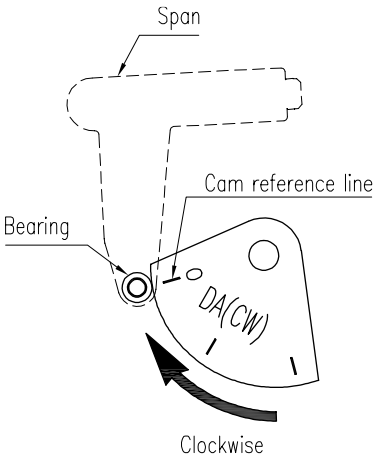

Fig. 7-4: Cam Installment (Da)

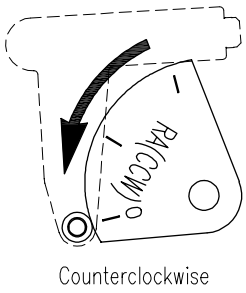

Fig. 7-5: Cam Installment (Ra)

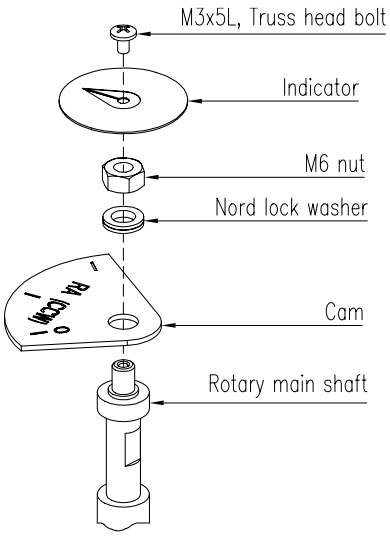

Fig. 7-6: Parts (Standard)

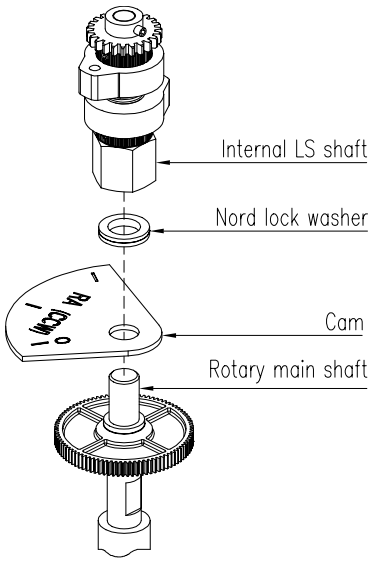

Fig. 7-7: Parts (LS internal option)

7.2 Adjustment - Zero Point and Span (Calibration)

Zero point adjustment and span adjustment (calibration) ensure that the actuator operates in the desired range and exact position relative to the input signal.

7.2.1 Precautions before zero point adjustment and span adjustment

1) When installing the positioner on the actuator, you must always perform zero point adjustment and span adjustment. Even when removing and reattaching the positioner from the same actuator, zero adjustment and span adjustment must be performed.
2) Since zero point adjustment and span adjustment are related to each other, if you adjust either one, the other must be adjusted again.
3) If the installation direction, temperature, supply pressure, etc. of the positioner change, check whether there is any problem with the zero point and span.
4) Even when driving after leaving it for a long time, check whether there is any problem with zero point and span.
5) Check whether the SUPPLY, OUT1, and OUT2 pipes are connected properly.
6) Check whether the input signal wires +, - and ground are connected properly.
7) Check whether the connection of the positioner, actuator, and feedback unit is solid.
8) Make sure the auto manual switch is locked clockwise (direction A).
9) Check whether RA and DA settings are correct.

7.2.2 Adjustment steps

1) Set the input current to 0% (standard specification is 4mA) and turn the wheel of the zero unit so that the actuator position is 0%.

※ If you turn the wheel in the downward “+” direction, the origin of the actuator will rise, and if you turn it in the upward “-” direction, it will be reversed.

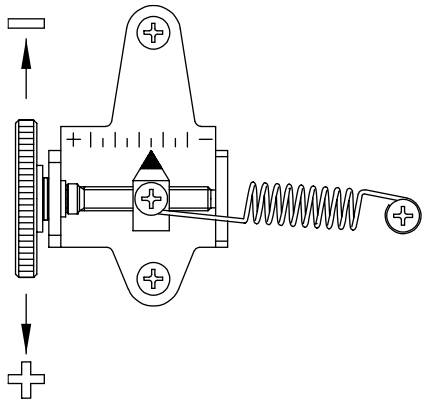

Fig. 7-8: Zero unit

2) Next, set the input current to 100% (standard specification is 20mA) and check whether the actuator position is 100%. If the position of the actuator is not 100%, loosen the span lock screw and adjust the span handle to set it to 100%.

※ Turning the wheel in the “+” direction widens the span of the actuator, and turning it in the “-“ direction narrows the span.

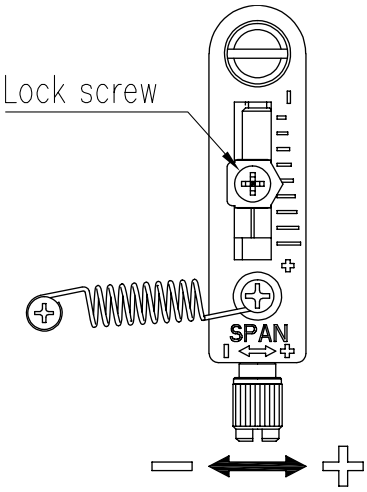

Fig. 7-9: Linear span unit

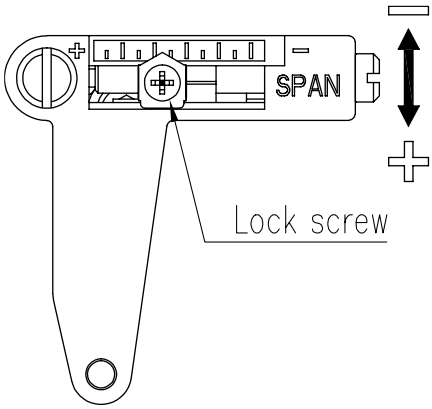

Fig. 7-10: Rotary span unit

3) Set the input current to 0% again and check whether the actuator position is 0%. If not, repeat steps 1 and 2 above.
4) Check whether the actuator reaches the same % position when the current is set to 25%, 50%, 75%, and 100%, respectively. If not, repeat steps 1-3.
5) After adjusting the position of the actuator relative to the input current, lock the lock screw of the span unit.

7.3 Adjustment – L/S (Limit Switch, Internal, Option)

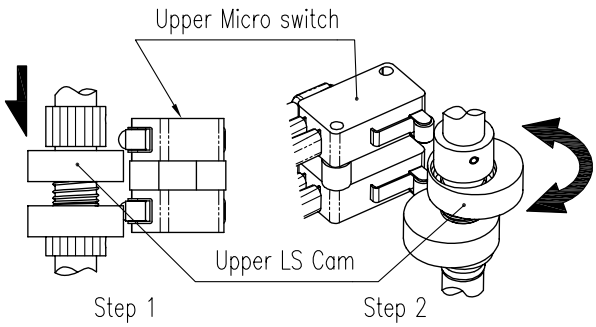

Fig. 7-11: Setting Upper switch

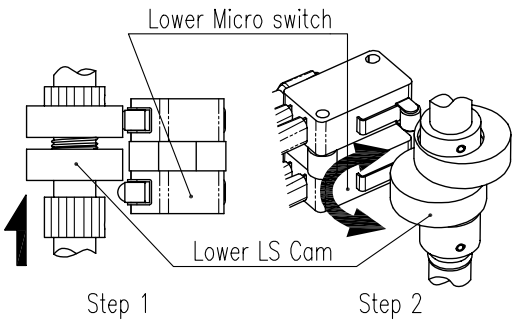

Fig. 7-12: Setting Lower switch

7.4 Adjustment – A/M switch (Auto/Manual)

1) Auto manual switch is on the top of pilot unit. Auto manual switch allows the positioner to be functioned as by-pass. If the counter-clockwise (toward “M”, Manual), it is loosened, then the supply pressure will be directly supplied from out1 port of positioner to the actuator regardless of input signal ampere. On the other hand, if the switch is turned clockwise (toward “A”, Auto) and it is fasten tightly, then the positioner will operate normally by input signal ampere. It is extremely important to check the allowed pressure level of the actuator when the switch is loosened.
2) Check whether the supply pressure is too high.
3) After using “Manual” function, auto manual switch should be returned to “Auto”.

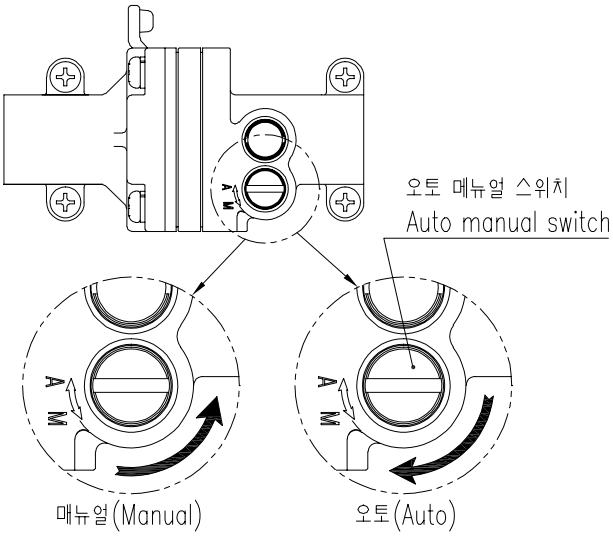

Fig. 7-13: A/M switch adjustment

7.5 Orifice Installment

If the actuator size is too small relative to the flow rate of positioner, hunting can occur. In order to avoid hunting, the orifices can be installed in the outports of the pilot.

1) Separate the pilot unit from the positioner.
2) Separate the o-rings from out1 and out2 ports, and insert the orifices.
3) Standard diameter of the orifice hole are 1 mm. 2 mm diameter orifice can be ordered.

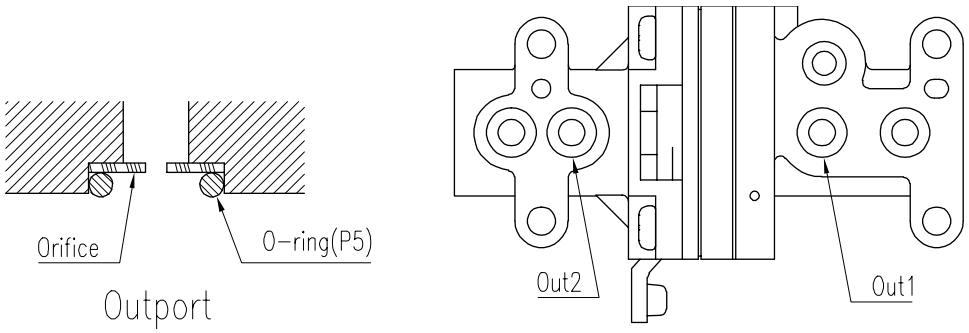

Fig. 7-14: Installing orifices

7.6 Reset – Potentiometer (4-20 mA Analog Output option)

External damage or physical shock can dislocate potentiometer from factory setting. Potentiometer must be re-calibrated when dislocation of the potentiometer or after cam adjustment. Please refer below instructions and figures.

1) Please set actuator position to 50 % of the valve stroke. Please make sure that the actuator does not move during the re-calibration.
2) In the junction box, Please pull out the potentiometer cable connector from potentiometer PCB. Do not pull out with too much force as wires can be damaged.
3) On the potentiometer cable connector, there are three holes. Out of three holes, please measure resistance level by plugging two hole (one of right or left and one of center) using a resistance tester. The potentiometer resistance level should be within 0 to 10 kΩ (Rotary positioner) and within 0 to 5 kΩ (Linear Positioner) during full stroke of the actuator.
4) Using “+” screw driver, loosen potentiometer stopper bolt. Do not loosen completely.
5) Pull out the potentiometer a little and gear of the potentiometer will be separated from main shaft gear. This will make user to turn the gear of the potentiometer.
6) Since current actuator position is 50% of the valve stroke, the resistance level should be measured around 5 kΩ (4.8 to 5.2 kΩ) at rotary positioner and 2.5 kΩ (2.4 to 2.6 kΩ) at linear positioner by turning gear of potentiometer.
7) After the setting, assemble back the stopper and the bolt.

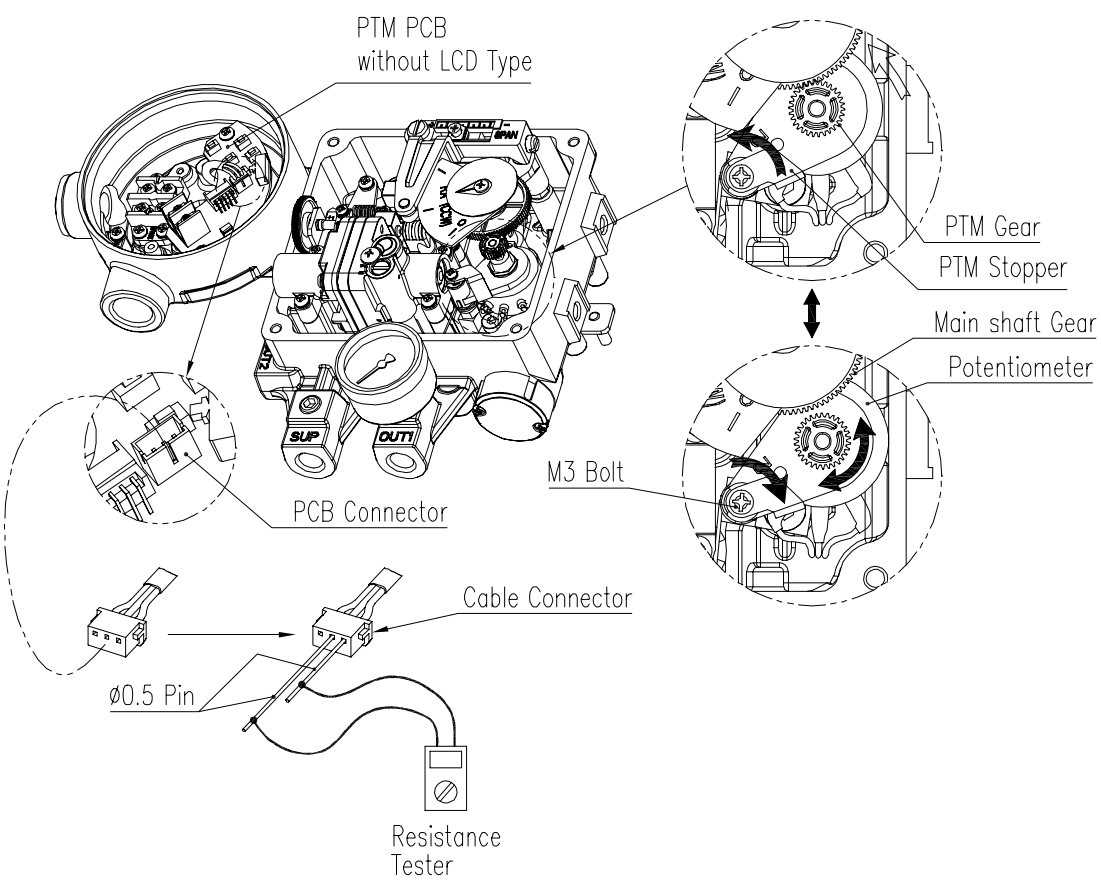

Fig. 7-15: Resetting resistance of potentiometer (without LCD)

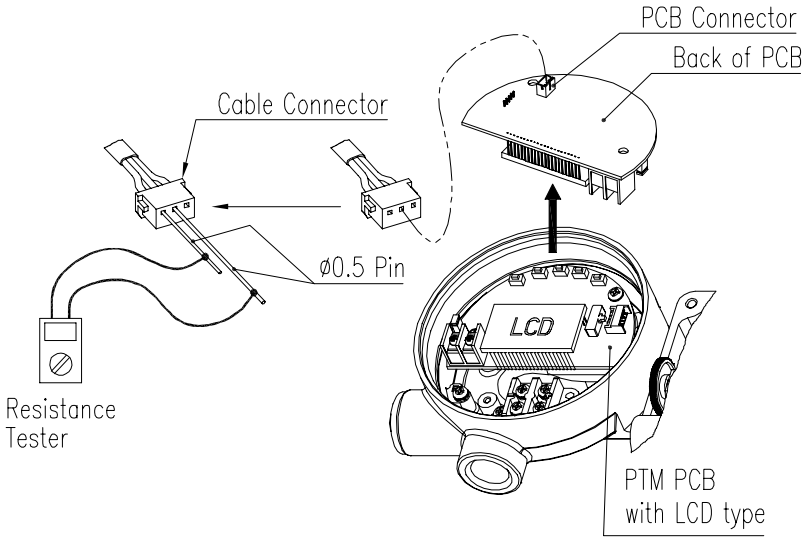

Fig. 7-16: Resetting resistance of potentiometer (with LCD)

7.7 Span spring for split range Replacement

If you want to change the normal control of positioner into split range control (by 4 to 12 mA or 12 to 20 mA), please order the split range control span spring from your local dealer and replace the existing span spring.

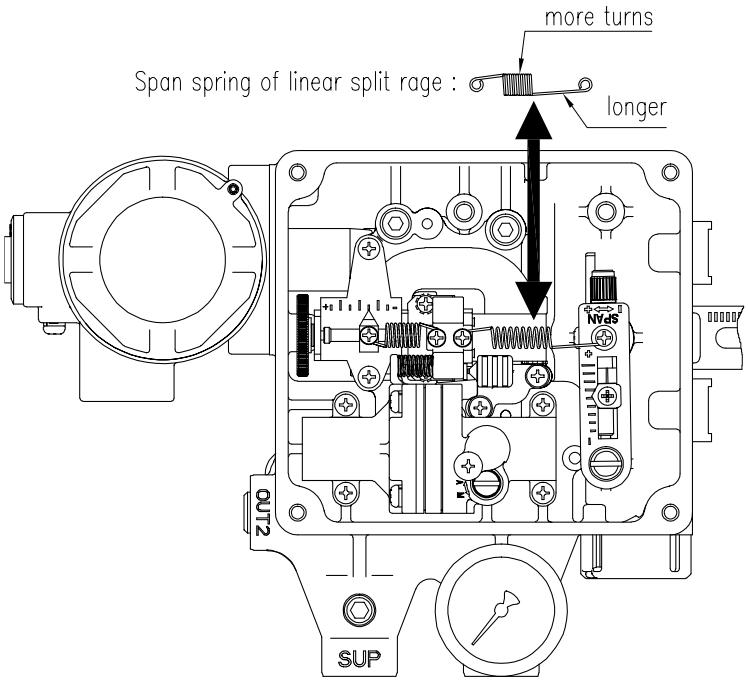

Fig. 7-17: Linear positioner

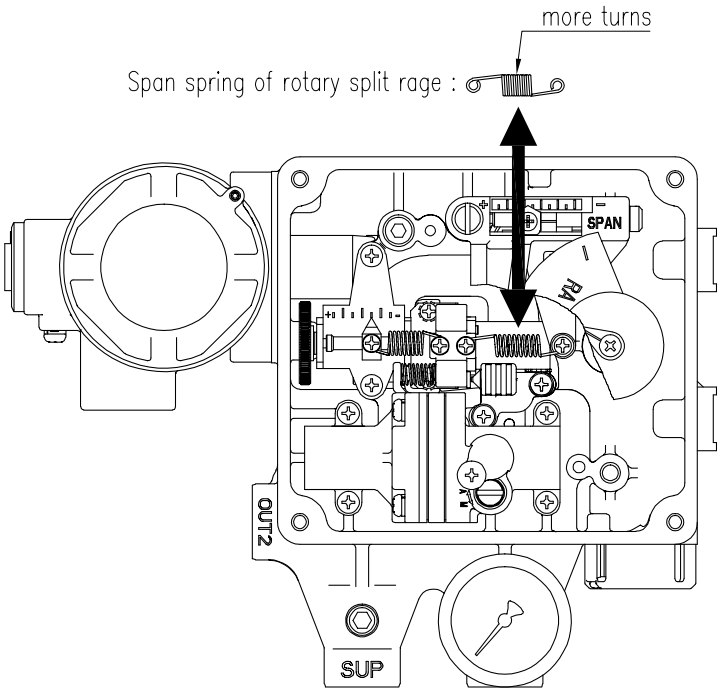

Fig. 7-18: Rotary positioner

8 Maintenance

8.1 Pilot valve

1) If Supply air pressure is not stable or Supply air is not clean, the positioner may not function properly. Air quality and pressure should be checked regularly to see if the air is clean and pressure set is normal.
2) If the pilot valve has to be removed from the unit, be cautious not to lose the O-ring attached to rear side of the pilot valve and the stabilizing spring between the pilot valve and the torque motor.
3) On the back of the Auto Manual switch, there is a fixed orifice (0.3 pie) which could be clogged with dusts and other substances and lead to malfunction of the positioner. If the positioner is not functioning, remove the Auto-Manual switch and check the back of the switch and see if the orifice is clean. Clean the orifice with air and reassemble the switch and the pilot valve to the positioner and test once again. If the unit is still not working, use a 0.2 pie drill or pin and insert into the orifice hole at the back of the Auto-Manual switch.

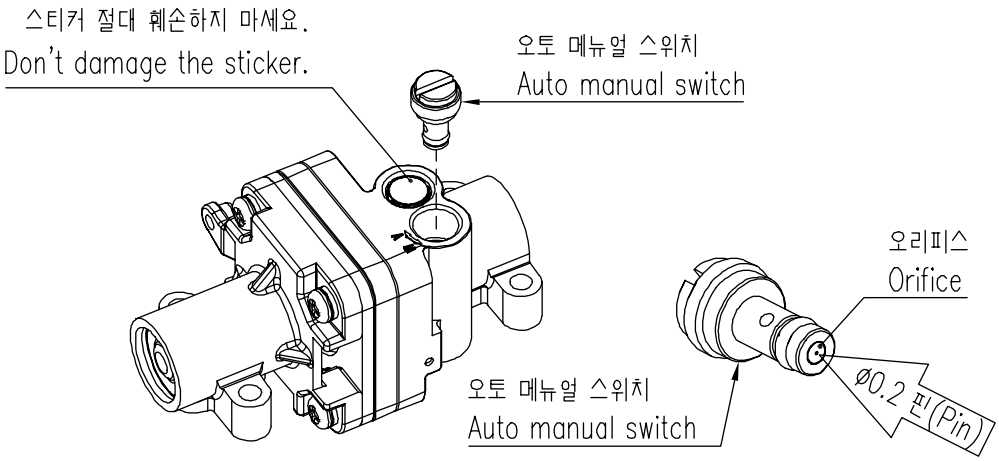

Fig. 8-1: Pilot unit and Auto manual switch

8.2 Seals

Once a year, it is recommend to check if there are any damaged parts of the positioner. If there are damaged rubber parts such as diaphragms, o-rings and packings, replace with new ones.

9 Troubleshooting

- **Positioner does not respond to the input signal.**

  1) Check supply pressure level. The lever must be at least 0.14 MPa(1.4 bar). For spring-return type of actuator, the supply pressure level has to be larger than the spring's specification.
  2) Check if input signal is properly supplied to the positioner. The signal should be 4-20 mA DC.
  3) Check if zero point or span point is properly set.
  4) Check if the positioner's nozzle has been blocked. Also, check if the pressure is supplied to the positioner and pressure is being exhausted through the nozzle. If the nozzle has been block by any substances, please send the product for repair.
  5) Check if feedback lever has been installed properly.

- **The pressure of Out1 reaches Supply pressure level and does not come back down.**

  1) Check auto manual switch. If the switch has been damaged, replace the switch or pilot relay valve.
  2) Check for a gap or damages between the nozzle and the flapper. If damaged, please send the product to the corresponding local Rotork YTC Limited office or main office in South Korea for repair.

- **The pressure is exhausted only by Auto manual switch.**

  1) Check if the positioner's nozzle has been blocked. Also, check if the pressure is supplied to the positioner and the pressure is being exhausted through the nozzle. If the nozzle has been blocked by any substances, please send the product to the corresponding local Rotork YTC Limited office or main office in South Korea for repair.

- **Hunting occurs.**

  1) Check if stabilizing spring has been displaced. (Next to Pilot unit)
  2) Check if the size of actuator is too small. If so, insert an orifice in order to reduce the pressure flow rate.
  3) Check if there is any friction between the valve and the actuator. If so, increase actuator's size or reduce the friction level.

- **The actuator moves only to full open and full close positions.**

  1) Check if Span or Cam of the positioner is installed correctly corresponding to direct or reverse acting of the actuator. If not, refer to 7.1.1 or 7.1.2 section.

- **Linearity is too low.**

  1) Check if linear positioner is properly positioned. Especially check if the feedback lever is parallel to the ground at 50 % point.
  2) Check if zero and span point have been properly adjusted. If either one of values is being adjusted, another one must be re-adjusted as well.
  3) Check if supply air pressure level is stable from the regulator. If the level is unstable, the regulator must be replaced.

- **Hysteresis is too low.**

  1) In case of double acting actuator, check if seat adjustment has been properly performed. Please contact YTC for any further inquiries regarding the seat adjustment.
  2) Backlash can occur when the feedback lever and lever spring are loosen. To avoid backlashing, please adjust the lever spring.
  3) Check if the connection bar to the feedback lever is tightly fastened.

rotork®

Contact us now

mail@rotork.com
www.rotork.com

PUB126-124-00
Issue 08/26