rotork®

Keeping the World Flowing
for Future Generations



RTP-4400 Intelligent Valve Positioner

Installation and operation manual

CE Ex

Contents

1. Introduction 03
- 1.1 General Information 03
- 1.2 Manufacturer Warranty 03
- 1.3 Safety Precautions in Hazardous Areas 04

2. Product Description 05
- 2.1 Operational Overview 05
- 2.2 Main Features and Functions 05
- 2.3 Label Description 06
- 2.4 Product Code 06
- 2.5 Product Specifications 07
- 2.6 Hazardous Area Approval 08
- 2.7 Exploded View 10
- 2.8 Product Dimensions 11

3. Installation 13
- 3.1 Necessary Precautions 13
- 3.2 Required Tools for Installation 14
- 3.3 Installation on a Linear Actuator 14
- 3.4 Installation on a Rotary Actuator 19

4. Pneumatic Connection 21
- 4.1 Precautions 21
- 4.2 Air Supply Requirements 21
- 4.3 Pneumatic Piping Requirement 21
- 4.4 Piping Positioner to Actuator 22

5. Electrical Connections to the RTP-4400 23
- 5.1 Precautions 23
- 5.2 Electrical Terminal Wiring 24
- 5.3 Grounding 26

6. Parts 27
- 6.1 Position Feedback Magnet Kits 27
- 6.2 Spare Parts Kits 29

7. Maintenance – Replacement 31
- 7.1 Replacing the Pneumatic Relay 32
- 7.2 Replacing the I/P Converter Kit 32
- 7.3 Replacing the Pressure Gauge 32
- 7.4 Replacing the LCD PCBA 33
- 7.5 Replacing the Main PCBA 33
- 7.6 Replacing the Terminal Main PCBA 34
- 7.7 Replacing the Terminal option PCBA (PTM option PCBA, DI/DO option PCBA, PTM+ DI/DO option PCBA) 34

8. Configuration and Operation 35
- 8.1 Warning 35
- 8.2 Local User Interface 35
- 8.3 Menu Structure Overview 37
- 8.4 RUN Mode Monitor 38
- 8.5 Configuration and Operation 39
- 8.6 Calibration (CALIb) 42
- 8.7 Manual Operation (MAN OPER) 48
- 8.8 Control Parameters (CTRL PARAM) 50
- 8.9 Input Configuration (IN CFG) 56
- 8.10 Output Configuration (OUTPUT CFG) 65
- 8.11 Device Configuration (dEV CFG) 71
- 8.12 Diagnosis (dIAGNO) 76
- 8.13 Device Information (INFO) 83
- 8.14 Error Codes Displayed During Auto Calibration 84
- 8.15 Status and Alarm Codes 85

9. Menu Structure 88

The name Rotork is a registered trademark. Rotork recognises all registered trademarks. Published and produced in the UK. POLTG0926. © Rotork 2026 all rights reserved. Rotork reserves the right to amend and change specifications without prior notice. For the latest version visit rotork.com

1. Introduction

1.1 General Information

Thank you very much for purchasing our product. This product has been manufactured and inspected under strict quality standards to ensure consistent quality before shipment. To use the product accurately and efficiently, please read this manual carefully and thoroughly before installation, commissioning, operation, and maintenance.

- Installation, commissioning, and maintenance of this product must be performed only by trained professionals authorised by the site supervisor. The product must also be installed in accordance with relevant regulations and standards of each country.
- To ensure the safety of personnel, the product, and the system in which the product is installed, always follow the safety instructions specified in this manual. Failure to comply with these safety instructions may result in the loss of safety assurance.
- Always wear personal protective equipment (PPE) in accordance with safe work procedures at the site.
- This manual must be delivered to the end user.
- The contents of this manual are subject to change without prior notice. If the product specifications, design, or components are changed, the changes may not be immediately reflected in this manual but will be included in future revisions.
- This manual may not be reproduced or reused for any purpose without prior approval from our company.
- If any issues not specified in this manual arise, please contact us immediately.
- This product is an accessory for control valves. Be sure to read the control valve's instruction manual before operation or maintenance prior to installation and operation.

1.2 Manufacturer Warranty

- Any modifications or repairs to the product are only permitted as specified in this manual. If the product is modified or altered without authorisation, Rotork will not be responsible for any resulting personal injury or property damage. If modifications are necessary, please contact your Rotork sales office in advance.
- Unless otherwise stated, the standard warranty period is 12 months from the date of shipment. Customers can extend the warranty by an additional 12 months by registering the product's serial number or lot number, customer information, and installation address at the Product Registration site: (https://www.rotork.com/en/service/product-registration).
- The warranty shall not apply under the following conditions:
  - Misuse, abuse, accidents, or unauthorised modifications or alterations
  - Improper installation, operation, or use not in accordance with the instructions provided in this manual
  - Failure to perform regular maintenance or servicing, or use of improper maintenance procedures
  - Tampering with, removal of, or damage to the product's model nameplate or serial number
  - Damage incurred during transportation, or due to natural disasters

For detailed warranty information, please contact the corresponding local Rotork sales office.

1.3 Safety Precautions in Hazardous Areas

⚠ **This product must be installed, commissioned, operated, and maintained in accordance with the explosion-proof regulations of the relevant country or region, and the applicable standards for hazardous environments. Ensure compliance with the certification conditions indicated in this manual and verify compatibility with the intended zone and maximum ambient temperature before use.**

- Risk of suffocation exists in confined or inadequately ventilated spaces where oxygen may be displaced by other gases. Personnel safety must be ensured during installation and operation.
- Do not disassemble or remove the product while it is under pressure or electrically powered. Always shut off power and air supply and release pressure from pipelines and equipment before servicing. Do not rely solely on pressure gauge readings - use an independent gauge for cross-checking.
- Do not operate the product with the cover open. Moisture and dust may affect performance. To prevent ignition in hazardous environments, never open the cover while power is supplied.
- This product can be operated remotely via HART communication, so be aware that the valve may move unexpectedly.
- This product is certified for both intrinsically safe (Ex i) and flameproof (Ex d) explosion protection using the same enclosure and internal components. Both certifications are listed on a single nameplate, and users can select the appropriate method based on the actual installation environment.
    - If the installation environment meets the requirements for intrinsic safety circuits and related standards, the product may be operated under Ex i certification conditions.
    - If the installation environment complies with the standards for flameproof enclosures, the product may be operated under Ex d certification conditions.

  Always verify that the installation environment (zone, temperature class, etc.) complies with both certification conditions and follow applicable laws and standards.
- For detailed information regarding the types and specifications of explosion-proof certifications, *refer to Section 2.6, Hazardous Area Approval.*
- Avoid electrostatic discharge when handling the product. Especially for aluminium enclosures, protect against impact and friction. Do not wipe the product with a dry cloth in explosive gas environments – use a slightly damp cloth instead.
- When using the product under Ex i conditions, install a suitable safety barrier or isolator. Intrinsically safe circuits limit electrical energy, allowing maintenance such as inspection and wiring with the cover open. However, in Zone 0 environments, where explosive gases may be continuously present, it is recommended to shut off power before performing any work.
- When using the product in a Flameproof (Ex d) configuration, never open the cover while the unit is energised. Before opening the cover, ensure that the power supply is completely disconnected and that no current or voltage remains in any of the product's circuits. Sufficient time must be allowed for any residual charge to fully dissipate.
- When using the flameproof (Ex d) type structure, the covers on the top and right side, the enclosure, and the flange surfaces where they are joined are critical components for maintaining explosion protection. Special care must be taken when handling these parts. The flange surfaces of the covers and enclosure must always be kept clean and free from damage. If a cover is dropped or if there are scratches, dents, or other damage to the flange surfaces, the affected part or the entire device must be replaced. The recommended tightening torque value for the base cover and manifold assembly is at least **60 kgf·cm.**
- Two cable entries are provided. All cable entries must be properly sealed to ensure complete integrity of the flameproof enclosure. For Ex d installations, use certified cable glands or flameproof conduit fittings. If only one entry is used, seal the unused entry with a certified flameproof blind plug. This is a critical safety measure to prevent the risk of gas leakage and ignition in explosive atmospheres.
- An M4 bolt is used for the external grounding terminal. Select a suitable terminal and wire, preferably with the maximum feasible cross-sectional area.
- This product must be installed in accordance with IEC 60079-14.
- When using this product in an intrinsically safe (Ex i) configuration, it is essential to comply with the requirements of IEC 60079-25. The device must be connected to control systems such as PLC or DCS through a certified safety barrier or isolator.

Specific Conditions of Use

- Parts of the enclosure are made of non-conductive materials – The user should ensure that the equipment is not installed in a location where it may be subjected to external conditions (such as high-pressure steam) which might cause a build-up of electrostatic charges on non-conducting surfaces. Additionally, cleaning of the equipment should be done only with damp cloth.
- Enclosure is made in aluminium – when the RTP-4400 is installed in areas requiring equipment EPL Ga, the enclosure shall be protected from vertically falling objects, rubbing or friction by other parts.
- In accordance with clause 5.1 of IEC 60079-1 the flame paths shall not to be repaired by the end user.
- The flameproof enclosure must be equipped with fasteners with a strength class of A2-70 or higher.
- The temperature at the cable entry and cable branching points of the equipment may exceed +70 °C and +80 °C respectively. A suitable cable shall be used for installation.

2. Product Description

2.1 Operational Overview

The RTP-4400 is a microcontroller-based intelligent valve controller that receives a 4–20 mA electrical signal from a control system to determine the valve position setpoint. It compares this setpoint with the actual valve position feedback signal and adjusts the valve position to ensure the deviation remains within an acceptable range. The difference between the setpoint and the feedback signal is processed by a control algorithm, which generates a servo signal to the I/P (current-to-pressure) converter. The output pressure from the I/P converter is then amplified by a pneumatic relay to drive the actuator. When the pneumatic relay operates, the actuator pressure changes accordingly, causing the control valve to move. The servo control algorithm continuously adjusts the I/P converter until the valve position matches the setpoint.

The LUI, consisting of an LCD display and buttons, allows users to configure parameters, perform auto-calibration, and operate the device in all environments – without the need to open the cover.

2.2 Main Features and Functions

- Diagnostic Capabilities
    - Advanced and Premium Diagnostics
    - Advanced Diagnostics and Premium Diagnostics
    - Simplified Dashboard Screen
    - Offline Diagnostics: Valve Signature Test, Partial Stroke Test, User Configurable Step Response Test, Test Report, and Comparison Test Report
    - Premium Online Diagnostics: Trends, Monitoring, Counters
    - Self-Diagnostics
    - Alarm Panel and Alarm List categorised by NE107 standard
    - Alarm Information and Alarm History Log
    - Easy Configuration, Auto/Manual Tuning, and Commissioning Support
    - Offline Diagnostics: Valve Signature Test, Partial Stroke Test, User-Configurable Step Response Test, Test Report, and Comparison Test Report
    - The performance of the valve and positioner can be precisely evaluated and analysed while the plant is offline. This function utilises the full stroke range of the valve to comprehensively diagnose its mechanical condition, control responsiveness, and degree of wear, making it a key tool for maintenance planning. Additionally, test results are documented for historical tracking and can be compared with previous data to analyse performance trends over time.
    - Premium Online Diagnostics: Trends, Monitoring, Counters. This feature enables real-time monitoring of valve conditions during plant operation. By analysing data collected over an extended period, it helps identify performance trends and detect early signs of internal wear or abnormal behaviour.
- Dual Explosion-Proof Design: Intrinsic safety and flameproof protection in a single device
- Linkage-less Non-Contact Position Feedback: This linkage-less feedback system eliminates the need for mechanical connections such as levers or linkages between the actuator stem and the device, thereby eliminating mechanical wear or corrosion, and simplifying installation and maintenance. The same device can be flexibly adapted for use with either linear or rotary actuators by simply replacing the external magnet.
- Enhanced Responsiveness: More than twice the air flow capacity compared to previous YT-3000 models.
- Low Air Consumption: Despite increased air flow capacity, the device maintains low air consumption, contributing to reduced operational costs.
- Corrosion Resistance: Constructed with copper-free aluminium (less than 0.4% copper content) for improved corrosion resistance.
- Durable and Robust Construction: Designed to withstand harsh environments including humidity, corrosive atmospheres, and vibration.
- Potted Electronics: Electronic circuits are potted in resin to protect against moisture, dust, toxic chemicals, and mechanical shock.
- Modular Design: Simplifies maintenance and servicing.
- Standard HART 7 Communication Support
- Compatibility with Various Host Systems: Supports interoperability with host systems from different manufacturers, based on FDT/DTM and EDD technologies. (Pending)
- Quick and Simple Configuration, Calibration and Commissioning: Supported by both local and remote operation.
- Options
    - 4–20 mA Analogue Output: Position Transmitter (NE43 is supported)
    - Two Isolated Digital Output Switches: Switches configurable for limit switches or alarm functions.
    - One Digital Input Switch: Enables special valve operations via external input.
    - Arctic Temperature at -55°C
    - Pressure Gauges

- Others
  - Electrical Enclosure Protection: IP66
  - LUI operation without opening the cover, enabling parameter adjustments in explosive gas environments.
  - Various Flow Control Characteristics: Supports Linear, Quick Open, Equal Percentage, and User Configurable 5 or 21 points.
  - Tight Shut-Off Function: Minimises valve leakage.
  - Split Range Control: Supports segmented control ranges such as 4–12 mA and 12–20 mA.
  - Corrosion-Resistant Coating: Polyester powder coating ensures long-term durability in corrosive environments.

2.3 Label Description

- MODEL:
  Model number and optional configurations
- SERIAL NO.:
  Unique serial number
- MONTH, YEAR:
  Manufacturing date
- EXPLOSION PROOF RATING:
  Certified explosion-proof grade
- INGRESS PROTECTION:
  Enclosure protection rating
- INPUT:
  Input signal range.
- AMBIENT TEMP.:
  Permissible ambient temperature for explosion-proof operation
- SUPPLY PRESSURE:
  Acceptable supply pressure range

2.4 Product Code

Product code **RPT-4400** **S D 4 2 0 A 0 S**

Acting Type
S = Single
D = Double

Explosion Protection
D = ATEX, IECEx, UKEX, KCs, PESO, ECAS
Z = NEPSI, CCC
A = cCSAus[1]
B = INMETRO

Conduit - Air Connection Type
4 = M20x1.5P – ¼ NPT
5 = ½ NPT – ¼ NPT

Communication
2 = HART

Input/Output
0 = None
1 = 4-20 mA Analogue Output
2 = Discrete Switch Input and Outputs
3 = 4-20 mA Analogue Output + Discrete Switch Input and Output

Diagnostics
A = Advanced
P = Premium

Pressure Gauge
0 = None
1 = Three Pressure Gauges

Ambient Temp.
S = -40 to +85 °C (-40 to +185 °F)
L = -55 to +85 °C (-67 to +185 °F)

Notes:
1. Certification pending.
- The bracket and magnet must be ordered separately.
- For strokes less than 12 mm, performance degradation may occur.



Fig. L-1: ATEX, IECEx, UKEX, KCs, PESO Label

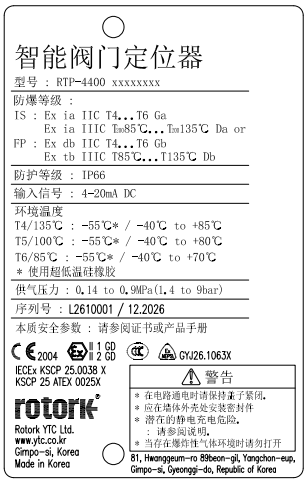

Fig. L-2: NEPSI, CCC Label

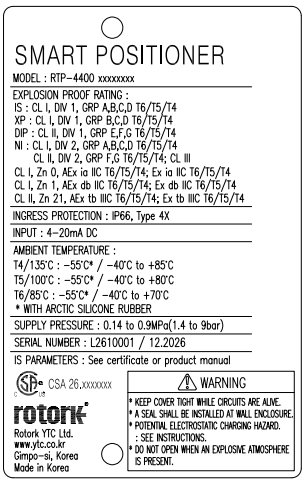

Fig. L-3: cCSAus Label (pending)



Fig. L-4: INMETRO Label

2.5 Product Specifications

Model	RPT-4400
Power Supply	Loop powered from 4-20 mA control signal
Minimum Operating Current	3.8 mA
Load Voltage	11.0 VDC at 20 mA DC 10.0 VDC at 4 mA DC
Input Impedance	Max. 550 Ω at 20 mA DC
Control System Compliance Voltage	28 VDC max.
Protection	Over current protection Reverse polarity protection
Digital Communication	HART 7
4-20 mA Analogue Output (Optional)	One isolated output signal: 4-20 mA Supply voltage: 9-28 VDC NAMUR NE43: Failure high (> 21 mA) or Failure low (< 3.6 mA)
Discrete Switch Input (Optional)	One isolated input Maximum supply voltage: 30 VDC, Max. 4 mA OFF at 0-5 VDC, ON at 10-30 VDC
Discrete Switch Output (Optional)	Two isolated outputs Maximum supply voltage: 30 VDC Max. ON state current ≤ 1 A ON state voltage drop ≤ 1 V OFF state current: ≤ 0.1 mA
Wire size	14-26 AWG
LUI usable range	-40 to +85 °C, LCD is not readable below -40 °C The LCD PCBA is 180˚ rotatable
	Four flame proof push buttons
Acting Type	Single or Double
Supply Pressure	1.4 to 9 bar (0.14 to 0.9 MPa) Do not exceed actuator rating
Flow Capacity	195 LPM / 413 SCFH (avg.) at 1.4 bar supply pressure 550 LPM / 1165 SCFH (avg.) at 5.5 bar supply pressure
Steady-State Air Consumption	Single-acting: 2.4 LPM (avg.) at 4 bar supply Double-acting: 2.7 LPM (avg.) at 4 bar supply
Supply Medium	Air or nitrogen It must be clean, dry and free of corrosive contaminants
Air Quality	According to ISA7.0.0.1 or ISO8573-1 Oil content: Class 3 (< 1 ppm) Solid particles: Class 6 (size ≤ 5 microns) Pressure dew point: At least 10 °C below minimum anticipated ambient temperature to ensure no risk of condensation
Input Signal or Air Supply Failure	Single: Actuator output 1 vents to atmosphere Double: Actuator output 1 vents to atmosphere and actuator output 2 goes to supply pressure
Ambient Temperature	Standard: -40 to +85 °C (-40 to +185 °F)
	Arctic temperature option: -55 to +85 °C (-67 to +185 °F)
Storage Temperature	Same as the Ambient Temperature
Relative Humidity	0-90 % non-condensing
Humidity Effect	IEC61514-2 < 0.3% for 48 hours at 40 °C and 93 % RH
Temperature Effect	Typ. 0.01% / °C over -40 to +85°C
Vibration	ANSI/ISA-75.13.01 4.0 mm at 5 to 15 Hz, 2g at 15 to 150 Hz, 1g at 150 to 2000 Hz

EMC Emissions and Immunity	Emissions: Class A (IEC 61000-6-4) Immunity: Performance Criteria A (IEC 61000-4 series)
Usable Altitude	Up to 2000 m
Linearity	± 0.5% F.S.
Hysteresis	± 0.5% F.S.
Sensitivity	± 0.3% F.S.
Repeatability	± 0.3% F.S.
Stroke Range	Linear: 6-120 mm Linear: 6-150 mm Rotary: 55-110°
Output Characteristics	Linear, Quick Open, EQ%, User Set (9 or 21 points)
Housing and Cover Material	Low copper aluminium alloy (copper<0.4%) Polyester powder coating
Enclosure Protection	IP66
Magnetic Holder, Magnetic Bracket, Mounting Bracket	STS 316
Air Connection	Supply pressure: ¼ NPT Output pressure: ¼ NPT Exhaust: ⅜ NPT (Pending) Tubing: ⅜ inch (10 mm) recommended
Cable Entry	M20x1.5P or ½ NPT
Gauge Connection	⅛ NPT
Weight	4.95 kg (10.91 lbs) 5.15 kg (11.35 lbs, including 3 pressure gauges)
Hazardous Area Approvals	ATEX, IECEx, UKEX, NEPSI, CCC, KCs, cCSAus (pending), PESO, INMETRO, ECAS

2.6 Hazardous Area Approval

* All certificates listed below are available on our website (https://www.rotork.com/en/about-us/our-brands/ytc).

- **ATEX**

  Approval Type: Intrinsic safety and Flame Proof

  Rating: II 1 GD Ex ia IIC T6/T5/T4 Ga,
  Ex ia IIIC T_{200}85°C/100°C/T135°C Da
  II 2 GD Ex db IIC T6/T5/T4 Gb,
  Ex tb IIIC T85°C/100°C/T135°C Db
  T6/T85°C: -55/-40 to +70°C
  T5/T100°C: -55/-40 to +80°C
  T4/T135°C: -55/-40 to +85°C

  Certification No.: KSCP 25ATEX0025X

- **IECEx**

  Approval Type: Intrinsic safety and Flame Proof

  Rating: Ex ia IIC T6/T5/T4 Ga,
  Ex ia IIIC T_{200}85°C/100°C/T135 C Da
  Ex db IIC T6/T5/T4 Gb,
  Ex tb IIIC T85°C/100°C/T135°C Db
  T6/T85°C: -55/-40 to +70°C
  T5/T100°C: -55/-40 to +80°C
  T4/T135°C: -55/-40 to +85°C

  Certification No.: IECEx KSCP 25.0038X

- **UKEX**

  Approval Type: Intrinsic safety and Flame Proof

  Rating: II 1 GD Ex ia IIC T6/T5/T4 Ga,
  Ex ia IIIC T_{200}85°C/100°C/T135°C Da
  II 2 GD Ex db IIC T6/T5/T4 Gb,
  Ex tb IIIC T85°C/100°C/T135°C Db
  T6/T85°C: -55/-40 to +70°C
  T5/T100°C: -55/-40 to +80°C
  T4/T135°C: -55/-40 to +85°C

  Certification No.: CML 25UKEX1421X

- **NEPSI**

  Approval Type: Intrinsic safety and Flame Proof

  Rating: Ex ia IIC T4...T6 Ga,
  Ex ia IIIC T_{200}85°C...T_{200}135°C Da
  Ex db IIC T4...T6 Gb,
  Ex tb IIIC T85°C...T135°C Db
  T6/T85°C: -55/-40 to +70°C
  T5/T100°C: -55/-40 to +80°C
  T4/T135°C: -55/-40 to +85°C

  Certification No.: GYJ26.1063X

- **CCC**

  Approval Type: Intrinsic safety and Flame Proof

  Rating: Ex ia IIC T4...T6 Ga,
  Ex ia IIIC T_{200}85°C...T_{200}135°C Da
  Ex db IIC T4...T6 Gb,
  Ex tb IIIC T85°C...T135°C Db
  T6/T85°C: -55/-40 to +70°C
  T5/T100°C: -55/-40 to +80°C
  T4/T135°C: -55/-40 to +85°C

  Certification No.: 2026322307007308

- **KCs**

  Approval Type: Intrinsic safety and Flame Proof

  Rating: 1. Ex ia IIC T6/T5/T4 Ga
  2. Ex ia IIIC T_{200}85°C/T100°C/T135 °C Da
  3. Ex db IIC T6/T5/T4 Gb
  4. Ex tb IIIC T85°C/T100°C/T135°C Db
  T6/T85°C: -55/-40 to +70°C
  T5/T100°C: -55/-40 to +80°C
  T4/T135°C: -55/-40 to +85°C

  Certification No.: 1. 26-GA2BO-0055X
  2. 26-GA2BO-0056X
  3. 26-GA2BO-0053X
  4. 26-GA2BO-0054X

- **cCSAus (Pending)**

  Approval Type: Intrinsic safety and Flame Proof

  Rating: Class I, Division (pending) Group (pending)
  Class II, Division (pending) Group (pending)
  Class III
  Ex ia IIC T4/T5/T6 Ga, Ex tb IIIC T135°C/T100°C/T85°C Da
  Ex db IIC Gb T4/T5/T6 ou T6, Ex tb IIIC Db T135°C/T100°C/T85°C
  Type 4, 4X; IP66
  T6/T85°C: -55/-40 to +70°C
  T5/T100°C: -55/-40 to +80°C
  T4/T135°C: -55/-40 to +85°C

  Certification No.: Certification Pending

- **PESO**

  Approval Type: Intrinsic safety and Flame Proof

  Rating: 1. Ex ia IIC T6/T5/T4 Ga,
  Ex ia IIIC T_{200}85°C/T100°C/T135°C Da
  2. Ex db IIC T6/T5/T4 Gb,
  Ex tb IIIC T85°C/T100°C/T135°C Db
  T6/T85°C: -55/-40 to +70°C
  T5/T100°C: -55/-40 to +80°C
  T4/T135°C: -55/-40 to +85°C

  Approval No.: 1. P653633/2
  2. P653633/1

- **INMETRO**

  Approval Type: Intrinsic safety and Flame Proof

  Rating: Ex ia IIC T6/T5/T4 Ga,
  Ex ia IIIC T_{200}85°C/T100°C/T135°C Da, IP66
  Ex db IIC T6/T5/T4 Gb,
  Ex tb IIIC T85°C/T100°C/T135°C Db, IP66
  T6/T85°C: -55/-40 to +70°C
  T5/T100°C: -55/-40 to +80°C
  T4/T135°C: -55/-40 to +85°C

  Certification No.: DNV 25.0298 X

- **ECAS**

  Approval Type: Intrinsic safety and Flame Proof

  Rating: Ex ia IIC T4...T6 Ga,
  Ex ia IIIC T_{200}85°C...T_{200}135°C Da
  Ex db IIC T4...T6 Gb,
  Ex tb IIIC T85°C...T135°C Db
  T6/T85°C: -55/-40 to +70°C
  T5/T100°C: -55/-40 to +80°C
  T4/T135°C: -55/-40 to +85°C

  Certification No.: 26-08-206299/E26-08-216169/NB0002

- **SIL2 (extendable to SIL3 in a redundant arrangement)**

  Intended application: The safety function requires the device to move the actuator to its designated safe position when the control signal or the pneumatic air supply to the positioner is lost or interrupted.

  Certification No.: C876112-IPA-KOR-DNV

- **Electromagnetic Compatibility (EMC)**

  EMC directive 2014/30/EC from April 2016

  EC Directive for CE conformity marking

2.7 Exploded View

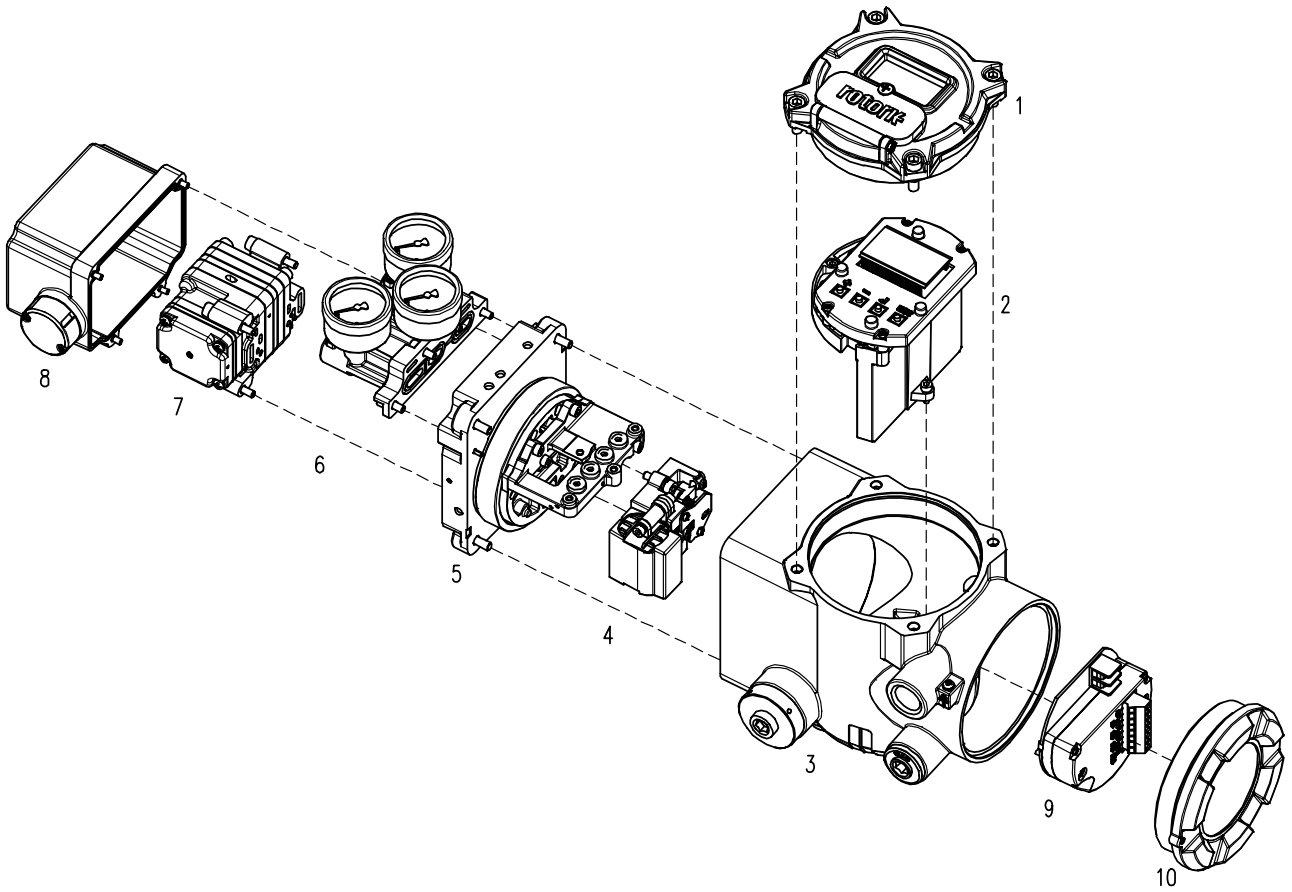

Fig. 2-1: RTP4400 exploded view

1	Base Cover	6	Gauge Block
2	Main PCBA	7	Pneumatic Relay
3	Base Body	8	Pneumatic Relay Cover
4	I/P Converter	9	Terminal Main PCBA + Terminal Option PCBA
5	Manifold Assembly	10	Terminal Cover

2.8 Product Dimensions

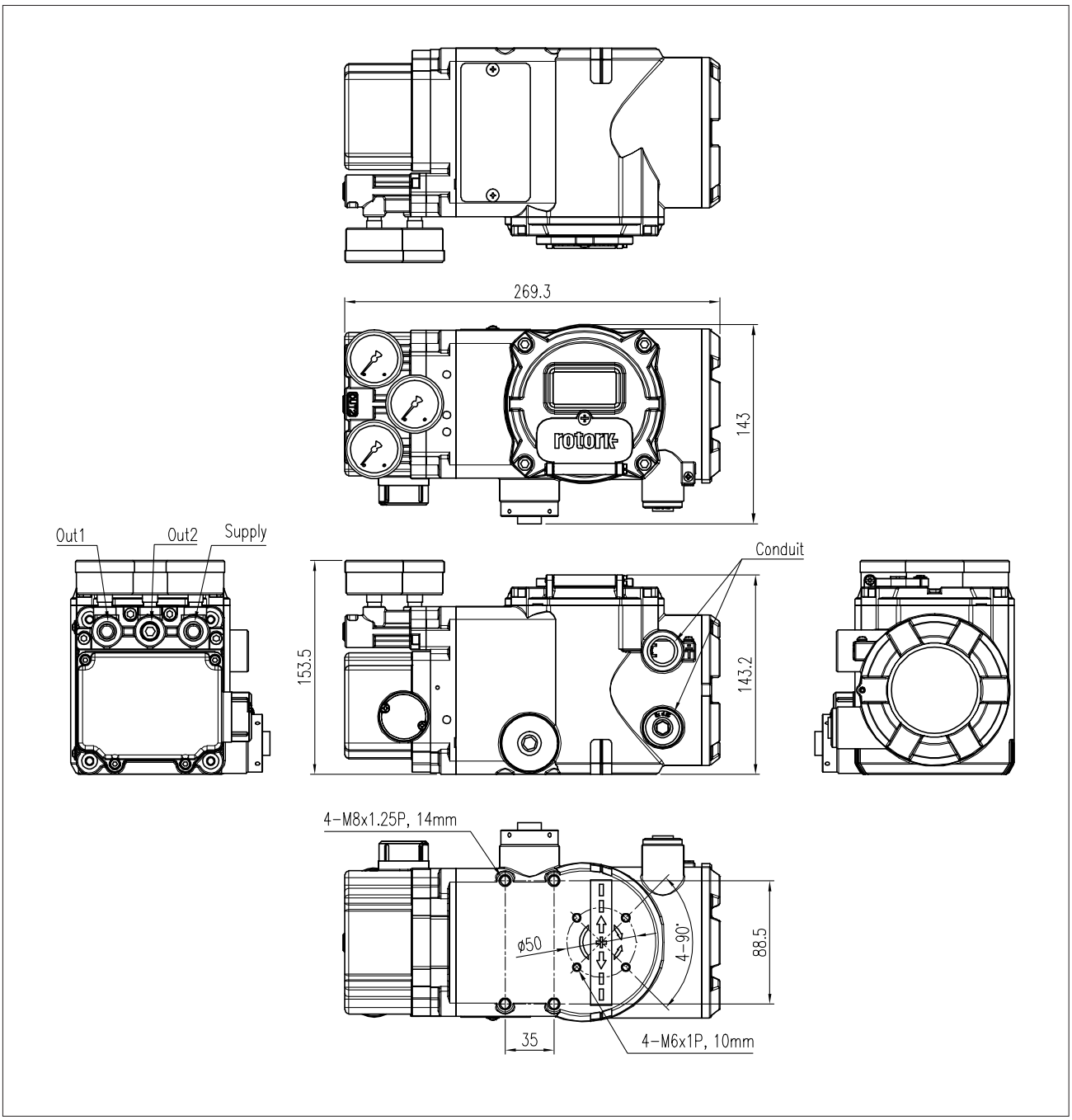

Fig. 2-2: RTP-4400

2.8.1 Magnet Dimensions for Linear and Rotary Actuators

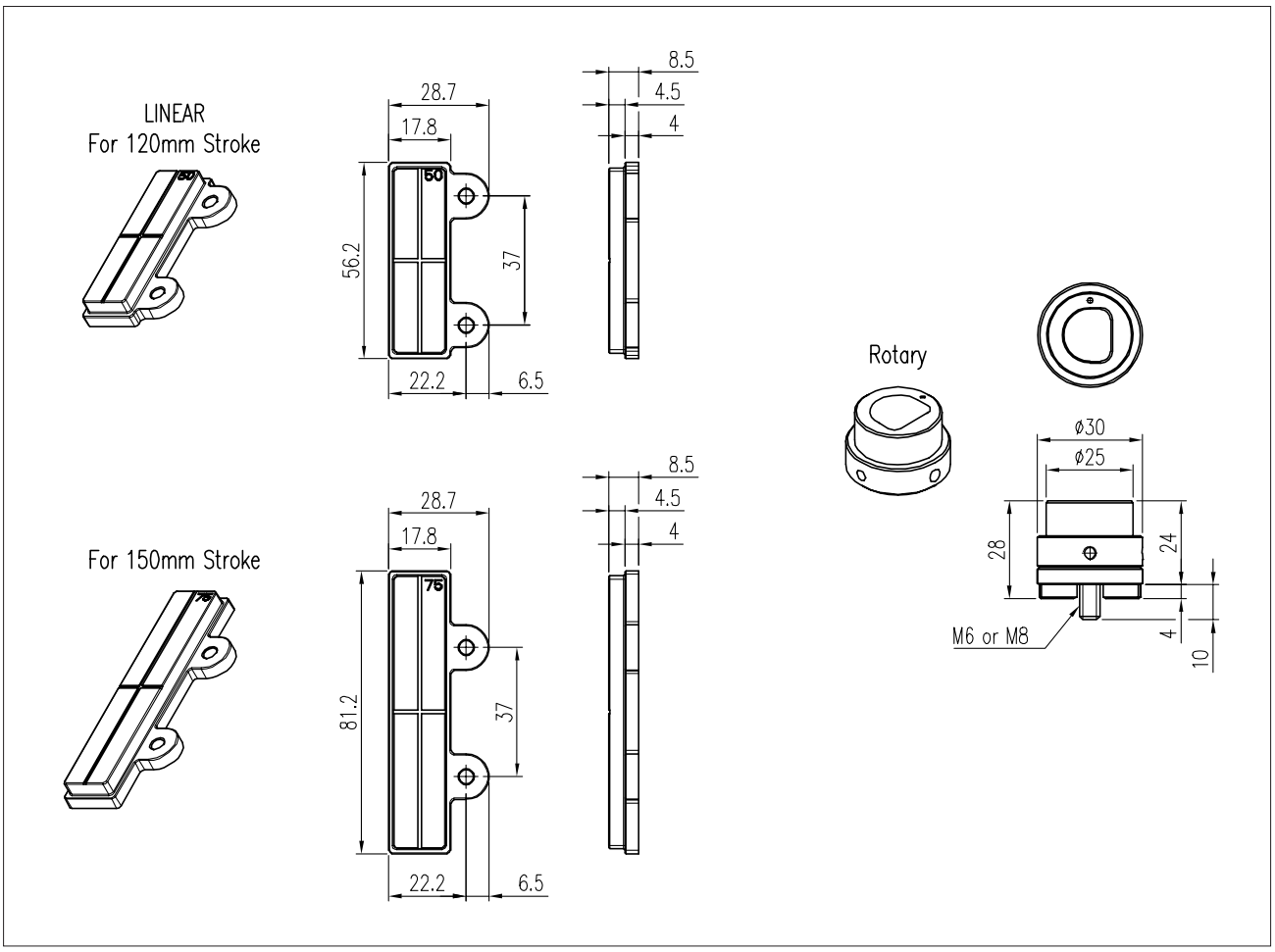

Fig. 2-3: Position Feedback Magnets (120 mm stroke, 150 mm stroke and rotary type)

3.1 Necessary Precautions

Read and follow the instructions below before installing the product:

- The maximum operating altitude is 2,000 meters above sea level.
- Ensure that all input signals and pneumatic supplies to the valve, actuator, and any related peripheral devices are completely shut off. Make sure no residual air pressure remains inside the actuator.

⚠ **To prevent a complete system shutdown, isolate the control valve safely from the system using a bypass valve or an equivalent device.**

- The product is equipped with a moisture drain plug designed to release internal air pressure and condensate. Install the unit in the orientation shown below to ensure proper drainage. Incorrect installation may result in condensate accumulation and potential damage to internal components.
- The enclosure meets the IP66 protection rating. Cable entries must be sealed in accordance with IP66 requirements. Do not install the unit with the cable entry facing upward. It is strongly recommended to install the unit with the electrical connection facing downward. Failure to comply with this requirement may result in water ingress through the cable gland, which can damage the product and void the warranty.

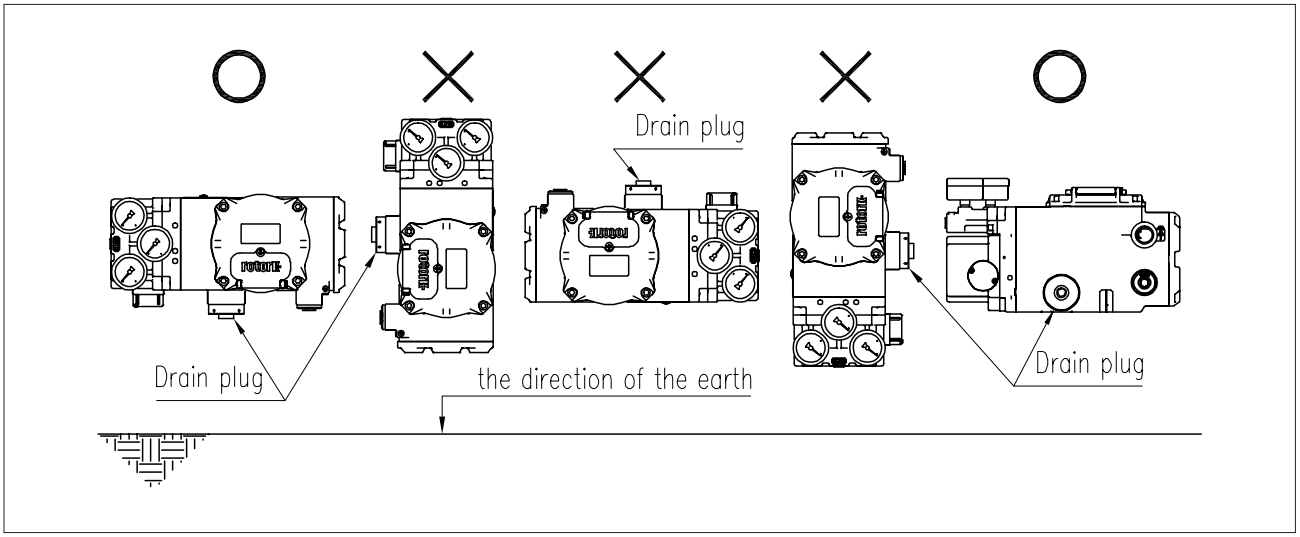

Fig. 3-1: Correct Installation Orientation

3.2 Required Tools for Installation

- Hex key set for hex socket cap bolts
- Phillips (+) or flat-head (–) screwdrivers
- Adjustable Spanner or Open-End Spanner

3.3 Installation on a Linear Actuator

The linear positioner is installed on valves that perform vertical linear motion, such as globe valves and gate valves equipped with either a spring-return diaphragm actuator or a piston actuator.

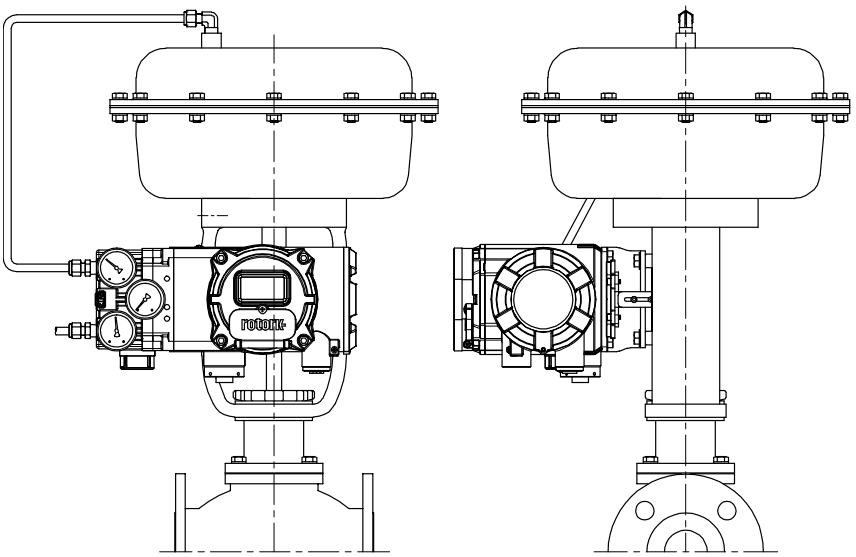

Fig. 3-2: Typical Installation Example

Before starting the installation, *refer to Fig 3-3* to ensure that the following components are prepared:

- RTP-4400
- Linear Magnet Kit
  - Linear Magnet (2 or 3) and two M4x10L fixing bolts with washer heads (1)
  - Plastic Alignment Template for installation guide (7) and four Bumper Pins (6)
  - Linear Magnet Bracket (4) and two M4x12L fixing bolts with washer heads (5)
- Additional brackets and bolts for connecting the Linear Magnet Bracket to the actuator stem. (These components are not supplied by Rotork.)
- Positioner mounting bracket (minimum thickness: 5 mm) and fixing bolts. (These components are also not supplied by Rotork.)
- For any brackets or fixing bolts not provided by Rotork, use materials with low magnetic permeability (e.g., stainless steel).

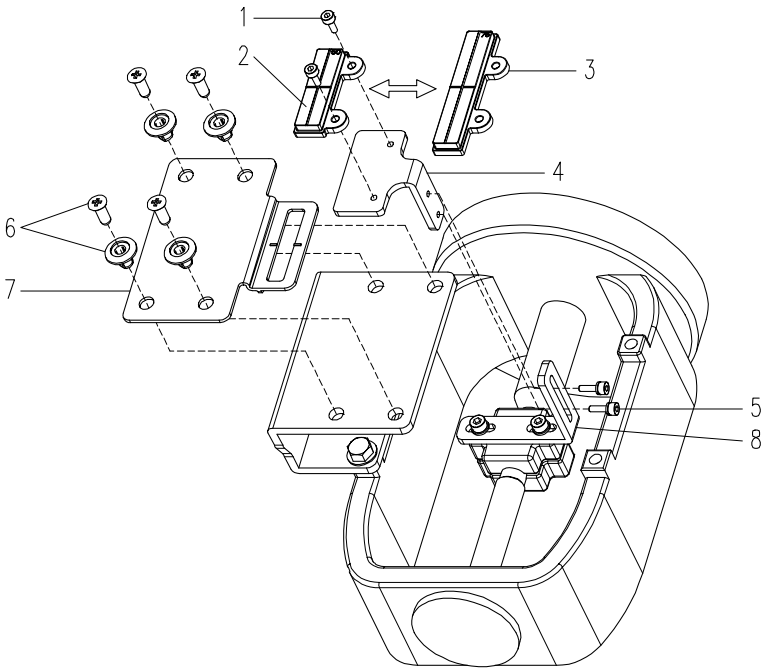

Fig. 3-3 Components for Linear Magnet Installation

3.3.1 Precautions

To mount the positioner onto the actuator yoke, the user must fabricate a suitable bracket separately.

When designing the bracket, the following must be carefully considered:

- At the 50% point of the valve stroke, the centre of the linear magnet must be precisely aligned with the marking located on the bottom of the positioner.

⚠ Failure to achieve this alignment may result in reduced control accuracy.

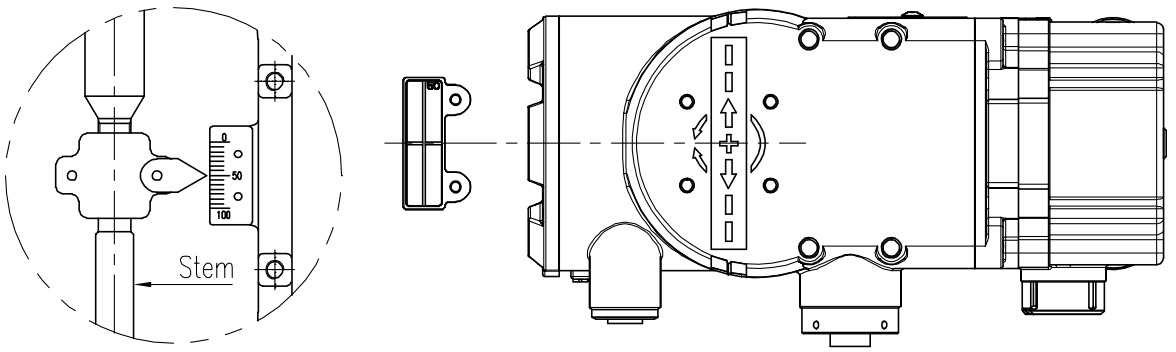

Fig. 3-4

3.3.2 Linear Positioner Installation Procedure

1) Securely assemble the Linear Magnet (2) and the Linear Magnet Bracket (4) using the fixing bolts (1).

2) Mount the assembled unit onto the custom-made actuator connection bracket (8). At this stage, do not fully tighten the bolts. Leave them slightly loose to allow for later position adjustment.

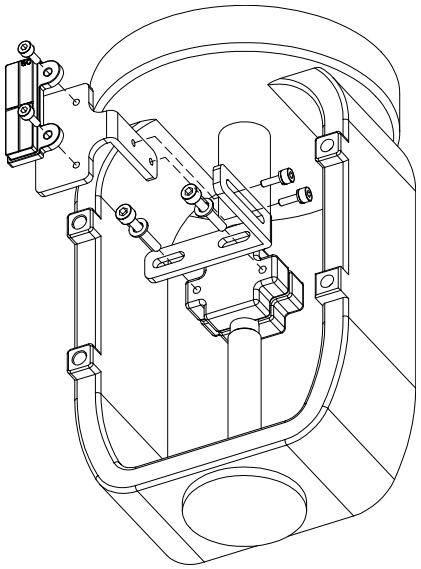

Fig. 3-5 Assembling the Linear Magnet

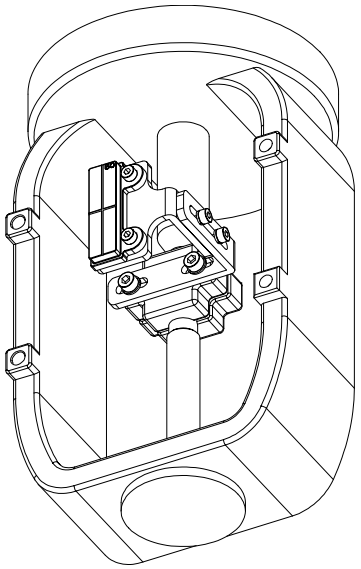

Fig. 3-6: The assembled Linear Magnet

3) Temporarily connect a pneumatic regulator to the actuator. Adjust the regulator pressure as needed so that the valve reaches the 50% position of its full stroke.

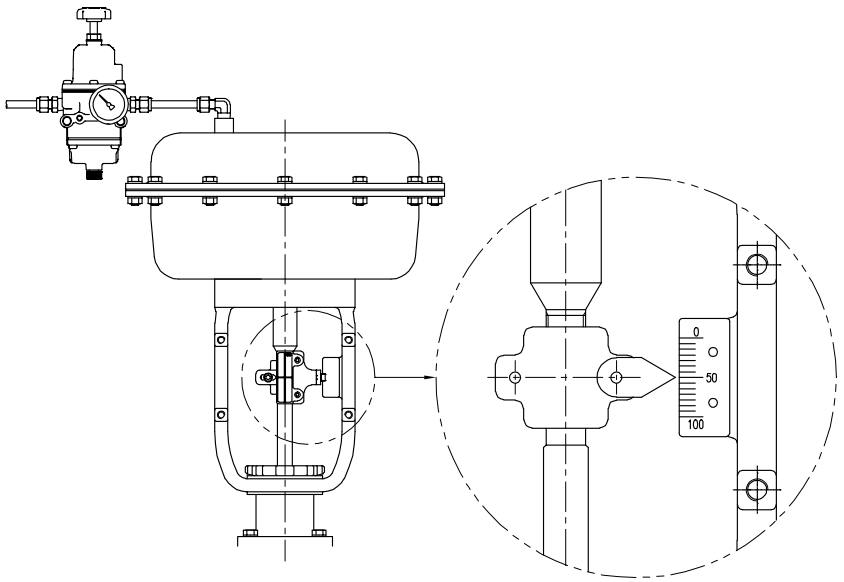

Fig. 3-7: Positioning the valve at 50% of the total stroke

4) Secure the positioner mounting bracket to the left yoke of the actuator using bolts.

5) Mount the plastic Alignment Template (7) onto the positioner mounting bracket and secure them using Bumper Pins (6)

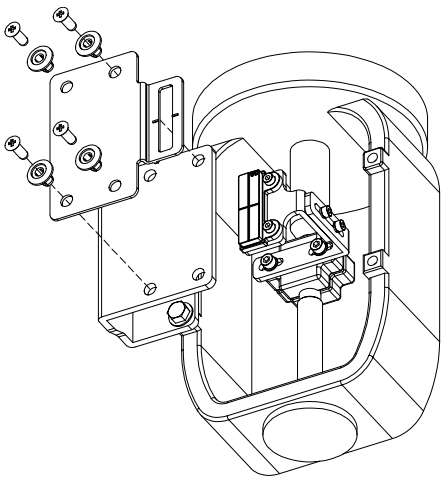

Fig. 3-8: Assembly of Positioner Mounting Bracket and Alignment Template

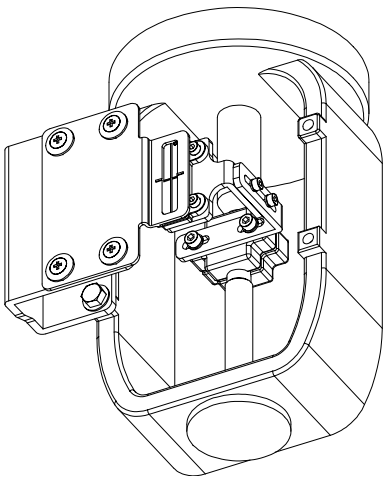

Fig 3-9: Installed Alignment Template

6) Position the linear magnet so that it lightly touches both the flat bottom and the side surface of the plastic Alignment Template. At this point, the cross mark on the Alignment Template must align precisely with the cross mark on the linear magnet. Misalignment may affect control accuracy.

7) Secure the linear magnet assembly and the custom-made actuator connection bracket firmly using the fastening bolts.

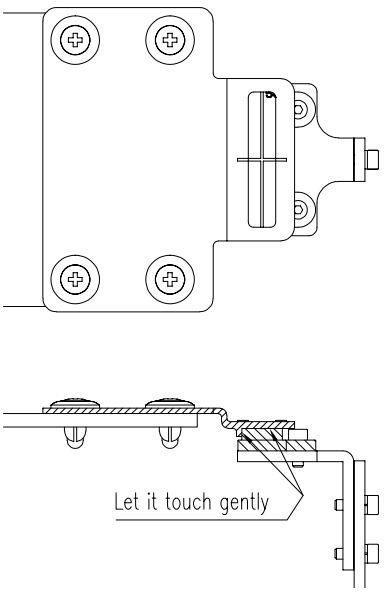

Fig 3-10: Alignment between the Alignment Template and the Linear Magnet

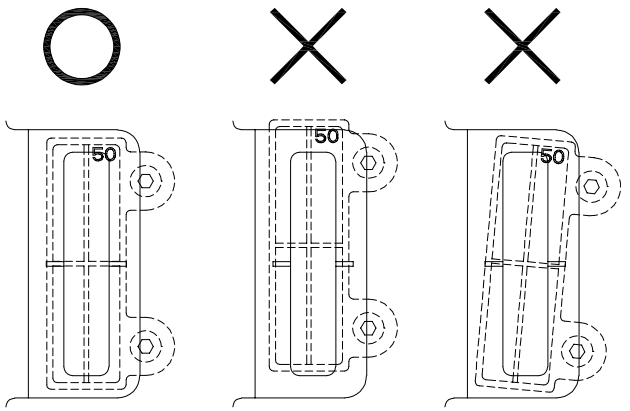

Fig 3-11: Cross Mark Alignment

8) Remove the bumper pins to detach the Align Template from the positioner mounting bracket.

   Then, align and assemble the positioner precisely with the positioner mounting bracket.

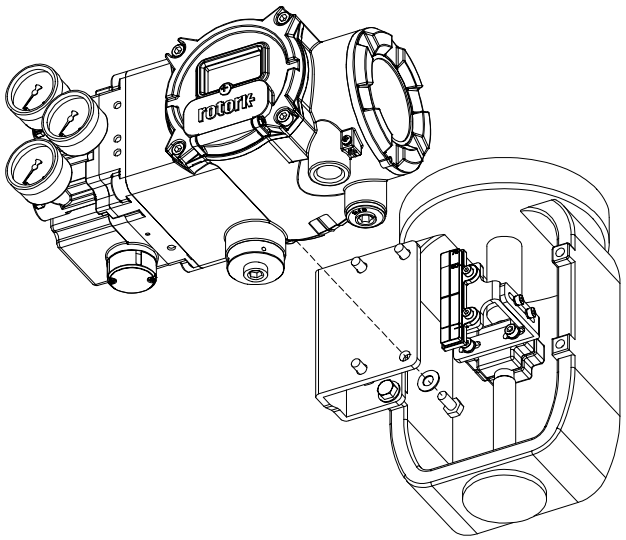

Fig. 3-12: Assembling the Positioner onto the mounting bracket

9) As shown in the figure below, ensure that the distance between the bottom surface of the positioner and the magnet is 5.3 ± 2.5 mm. Also, make sure that the surface of the magnet is aligned parallel to the bottom surface of the positioner, and that the magnet is positioned in a straight line along its length. Failure to do so may result in reduced control performance.

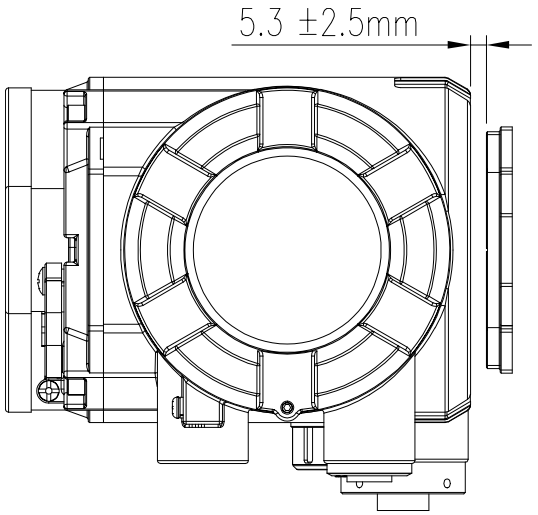

Fig. 3-13: Distance between the Positioner and the Magnet

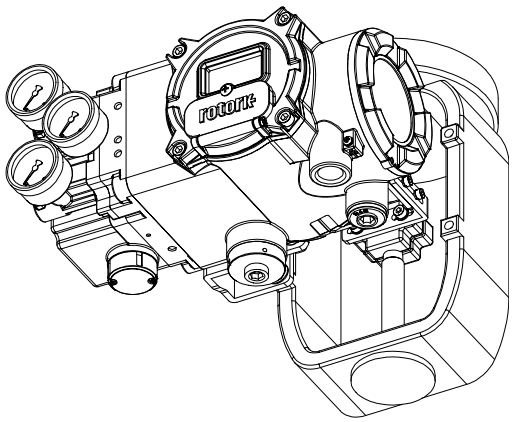

Fig. 3-14: Assembled View of the Positioner

3.4 Installation on a Rotary Actuator

Rotary positioners are installed on valves equipped with rack-and-pinion, scotch yoke, or complex-type actuators. These actuators are typically used with valves such as ball valves or butterfly valves, which operate by rotating the stem 90 degrees.

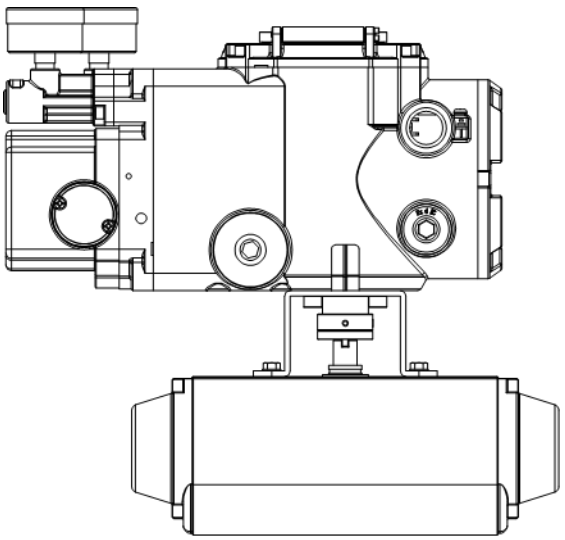

Fig. 3-15: Typical Installation Example

Before starting the installation, ensure that the following components are prepared:

- RTP-4400
- Rotary Magnet Kit
  - Actuator Holder (14), Rotary Magnet (11) and fixing bolts (12, 13)
  - Plastic Alignment Template for installation guide (7) and four Bumper Pins (6)
  - Linear Magnet Bracket (4) and two M4x12L fixing bolts with washer heads (5)
- Positioner mounting bracket (9) and fixing bolts (10)

  The positioner mounting bracket is available in four types, depending on the actuator's interface specifications:
  - 30 x 80, H20
  - 30 x 80, H30
  - 30 x 130, H30
  - 30 x 130, H50

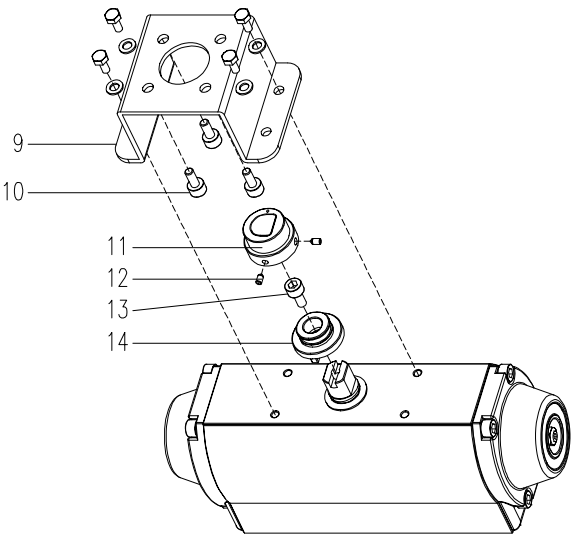

Fig. 3-16: Components for Rotary Positioner Installation

3.4.1 Rotary Positioner Installation

1) Align the actuator holder (14) with the flat groove on the actuator stem and secure it in place using fixing bolt (13).
2) Install the rotary magnet (11) into the actuator holder using the fixing bolts (12). The rotation direction of the rotary magnet is not critical.
3) Mount the positioner mounting bracket (9) onto the actuator. At this stage, ensure that the centre hole of the positioner mounting bracket is well aligned concentrically with the rotary magnet.
4) Align the positioner precisely with the positioner bracket and assemble them.
5) As shown in the diagram below, the distance between the top surface of the rotary magnet and the bottom surface of the positioner must be maintained at 2.6 ± 0.3 mm. If this distance is not within the specified range, it may result in degraded control performance.

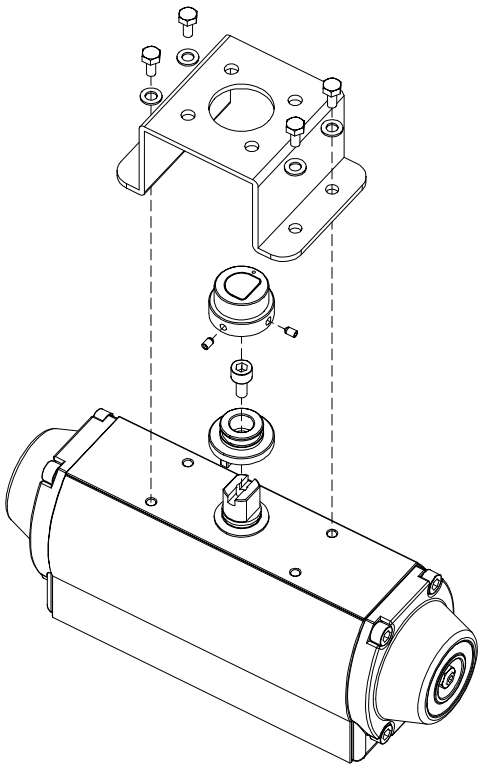

Fig 3-17: Assembling the positioner mounting bracket and the magnet

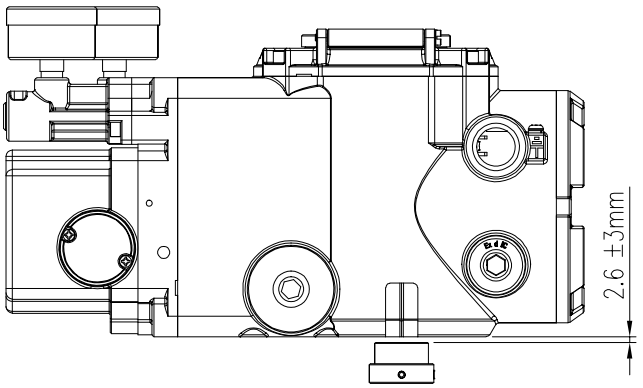

Fig 3-18: Distance between the Positioner and the Magnet

4. Pneumatic Connection

4.1 Precautions

- Make sure that the pneumatic supply used for the positioner is free from moisture, oil, foreign substances, corrosive gases, or other contaminants. To ensure this, the quality of the compressed air must be carefully considered when selecting equipment such as air compressors and pneumatic systems.
- Always install a dedicated air filter in front of the positioner's supply port or use a pneumatic regulator with an integrated filter (YT-200). These measures are essential to prevent the ingress of moisture, oil, and foreign particles, thereby ensuring stable operation and prolonging the service life of the product.

4.2 Air Supply Requirements

- A high-quality air supply significantly enhances control performance and reduces maintenance costs for the product. Refer to ANSI/ISA-7.0.01, which defines the Quality Standard for Instrument Air.
    - Use compressed air that has been filtered through a 5-micron fine filter to remove foreign particles.
    - Take care to ensure that the air supply does not contain oil or lubricants. The concentration of lubricants must be maintained below 1 ppm (parts per million), measured either by weight (w/w) or by volume (v/v).
- Refer to ISO 8573-1, which defines the Contaminants and Purity Classes of Compressed Air.
    - Solid particles: Class 6
    - Oil content: Class 3 (< 1ppm)
- Use dry air with a dew point at least 10 °C lower than the lowest expected ambient temperature.
- This product is designed to operate with pneumatic pressure ranging from 0.14 to 0.9 MPa (1.4 to 9 bar). Do not use pressures outside this range. Also, ensure that the supply pressure does not exceed the actuator's rated pressure.
- It is recommended to set the pressure supplied from the regulator to the positioner approximately 10% higher than the actuator's operating pressure or spring range.

4.3 Pneumatic Piping Requirement

- Before installing the piping, make sure to completely remove any foreign substances inside.
- Ensure that the piping is not crushed or damaged in any section.

⚠ When connecting the pneumatic output of the product to the actuator input, or the output of the filter regulator to the supply port of the product, use 10 mm (or ⅜ inch) piping. However, if the actuator is relatively small and its response speed is considered sufficient, piping with an outer diameter of 8 mm or 6 mm may also be used.

- Do not extend the piping longer than necessary. Excessive piping length may affect flow rate and reduce response speed.

4.4 Piping Positioner to Actuator

4.4.1 Single Acting Actuator

A single-acting positioner uses only the OUT1 port. Therefore, for a single-acting actuator with a spring return mechanism, connect the OUT1 port of the positioner to the actuator's pneumatic port.

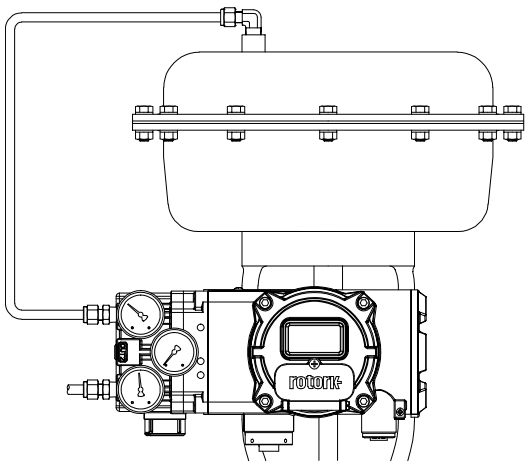

Fig. 4-1: Single Acting Linear Actuator

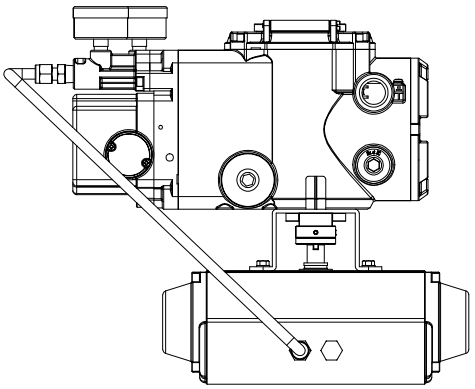

Fig. 4-2: Single Acting Rotary Actuator

4.4.2 Double Acting Actuator

A double-acting positioner uses both the OUT1 and OUT2 ports. As it is designed to output air pressure from the OUT1 port when the input current signal increases, make sure to connect the OUT1 and OUT2 ports to the actuator correctly based on this operating characteristic.

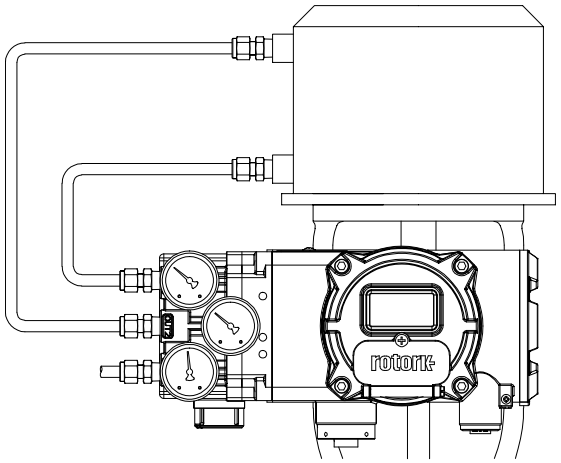

Fig 4-3: Double Acting Linear Actuator

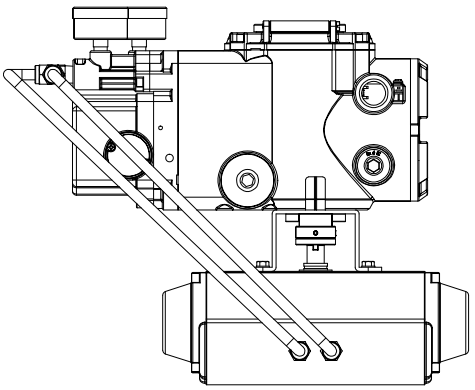

Fig 4-4: Double Acting Rotary Actuator

5.1 ⚠ Precautions

- The product is equipped with two conduit entries. For the thread specifications of the conduit entries, *refer to Section 2.4, Product Code*.
- The temperature rating of cables used in hazardous areas must be equal to or greater than the highest temperature to which the cable may be exposed during operation.

  In Ex d (flameproof) environments, the cable temperature rating must consider the maximum surface temperature of the equipment (based on its T-class) or the ambient temperature near the equipment – whichever is higher.

  In Ex i (intrinsically safe) environments, although the circuit itself generates minimal heat, the cable must still be rated for the maximum ambient temperature of the installation area, with an appropriate safety margin (typically +10 to +20°C).
- In hazardous areas requiring flameproof protection (Ex d), it is mandatory to use either explosion-proof conduit systems or certified flameproof packing-type unions. When using flameproof packing-type unions, the cable's outer diameter must precisely match the internal rubber seal to ensure a gas-tight fit and maintain the flameproof integrity. When using conduit systems, sealing fittings (sealing compound or gaskets) must be installed within 50 mm of the enclosure wall to prevent the transmission of hot gases or flames through the conduit, in accordance with IEC 60079-14.
- In explosion-proof (Ex d) hazardous areas, never open the cover while the power is connected. Always disconnect the power and wait until any residual voltage has fully dissipated before performing any work. In intrinsically safe (Ex i) hazardous areas, a safety barrier must be installed.
- The valve positioner is powered by the output channel of the control system and operates using a 4–20 mA current control signal. Directly connecting a DC voltage source (instead of a current source) to the positioner is strictly prohibited, as it may cause permanent damage to the device.
- The compliance voltage of the control system supplying the current (current source) must be greater than 11 VDC and no more than 28 VDC. If the cable length between the current source and the positioner is long, or if components such as filters or safety barriers are installed in between, voltage drop must be considered when selecting the appropriate compliance voltage.
- When using the 4–20 mA analogue output option (position transmitter), a separate power supply of 9 to 28 VDC is required.
- Do not connect a voltage source to the 4–20 mA input terminals (AI+, AI-) under any circumstances.

  Only a current source must be used. Typically, a dedicated output card from the control system or a loop calibrator is used as the current source.

  Connecting a voltage source from the analogue output terminals (AO+, AO-) to the input terminals (AI+, AI-) may result in damage to the internal PCBA.
- For safety and electrostatic discharge protection, ensure proper grounding using the internal or external grounding terminals provided on the product, if necessary.

  The cable shield should be grounded at only one end – either at the control system or at the device itself. Grounding both ends simultaneously may create a ground loop, which can cause malfunction or introduce electrical noise.
- Use wires with a gauge between 14 AWG (2.1 mm²) and 26 AWG (0.13 mm²).

  Shielded twisted pair cables are recommended for improved resistance to electromagnetic interference (EMI) and electrical noise.
- Avoid routing cables near high-noise equipment such as high-capacity transformers, motors, or welding machines, as this may cause signal interference or malfunction.
- Keep magnetic materials away from the product, as they may cause malfunction.

  In particular, magnetised tools such as screwdrivers should be kept at least 30 cm (12 inches) away from the device.

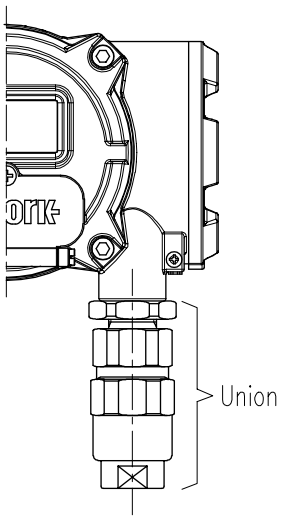

Fig 5-1: Flameproof packing-type union

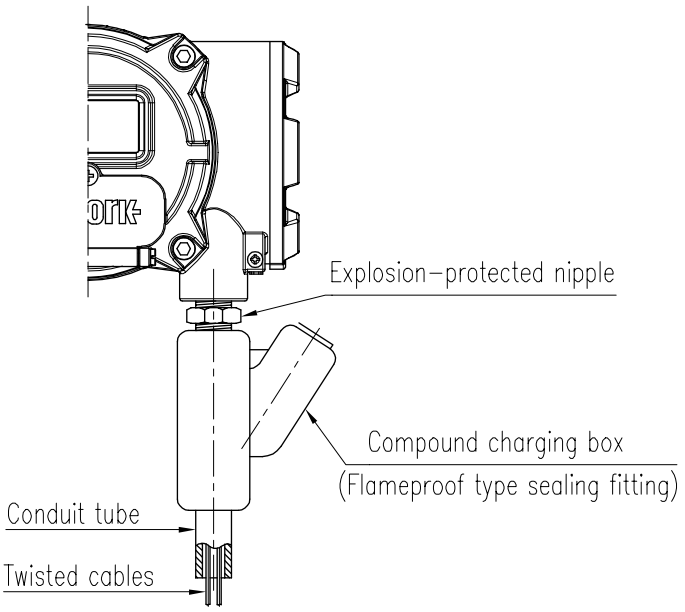

Fig 5-2: Flameproof conduit with compound-filled sealing fitting

5.2 Electrical Terminal Wiring

1) Use a 2 mm hex wrench to loosen the set screw for the stopper, then open the terminal cover.
2) Connect the stripped wire to the terminal block according to the correct polarity, then securely fasten it using the terminal screw. The recommended tightening torque is 6 kgf·cm for two Analogue Input terminals and 2 kgf·cm for eight I/O terminals.
3) After completing the wiring, close the terminal cover and tighten the set screw for the stopper to secure the cover.

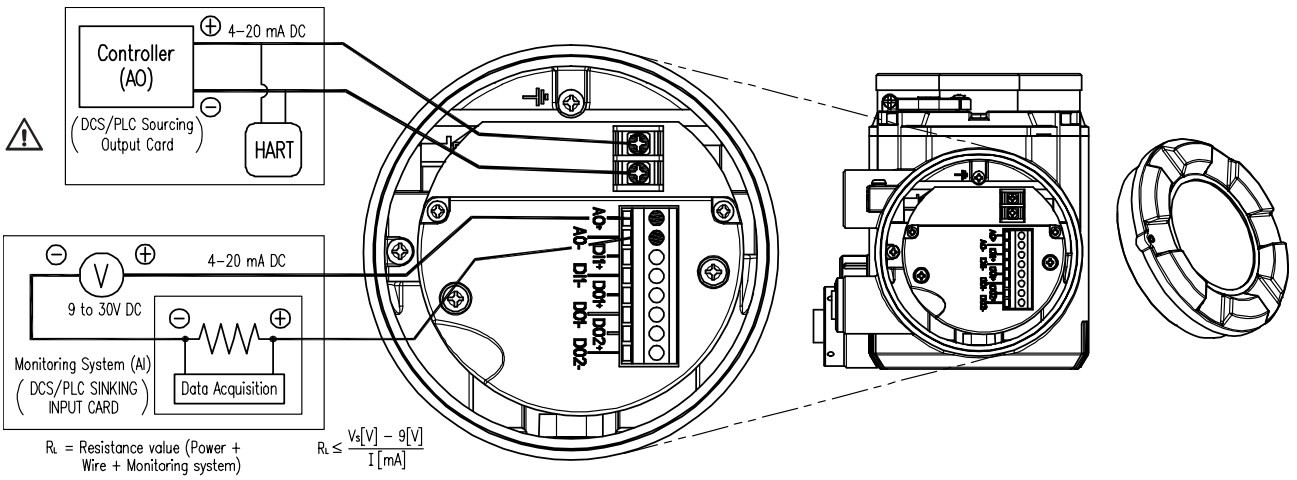

Fig 5-3: Analogue Input (AI) and Analogue Output (AO)

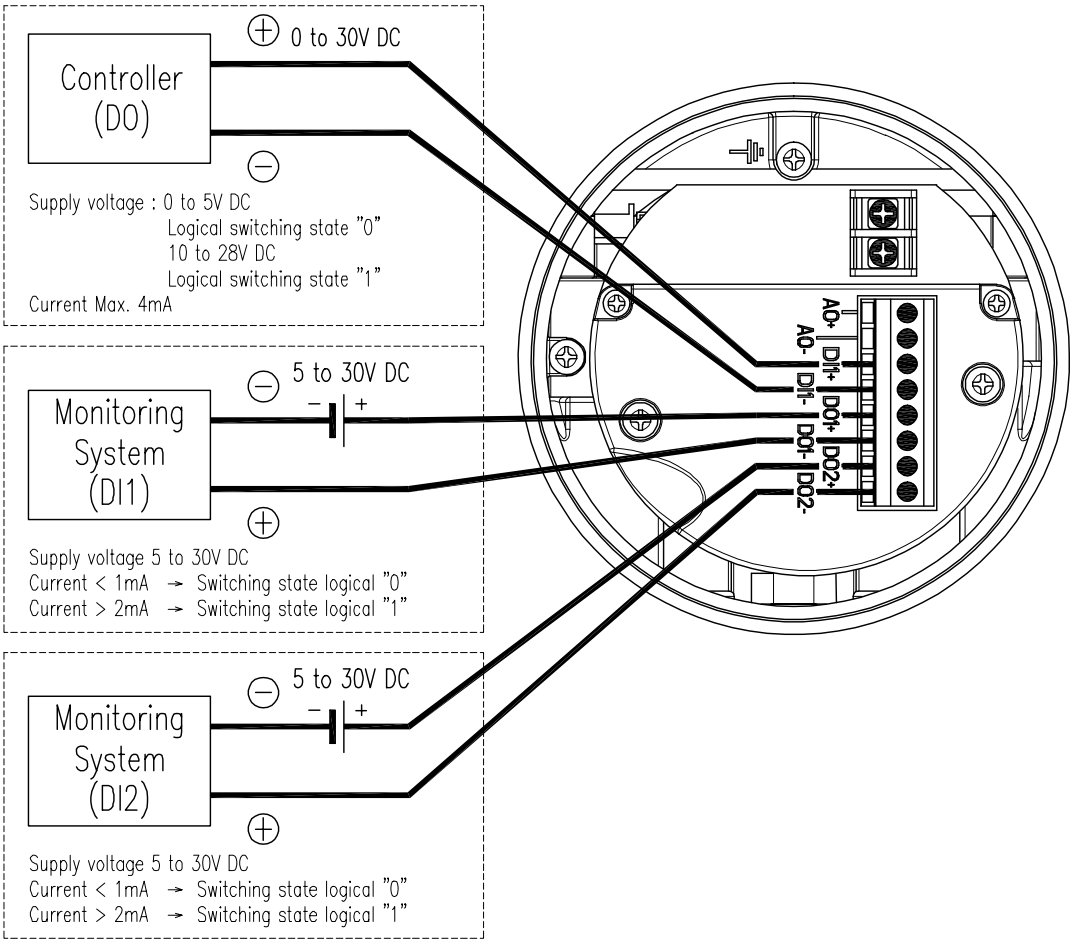

Fig 5-4: Discrete Input Switch (DI1) and Discrete Output Switches (DO1 and DO2)

Terminal name	Signal name	Function
AI +, AI –	Loop Power (+/-) or Analogue Input Signal (+/-)	An analogue input signal (4–20 mA) is used to supply both electrical power and a position control command to the positioner.
F.G	Grounding	Earthing for safety and surge/ESD protection
AO +, AO –	Analogue Output Signal (+/-)	Analogue output signal(4 to 20 mA) indicating the current valve position.
DO1 +, DO1 –	Discrete Output Switch 1 (+ /-)	Discrete output switch terminals that are activated upon specific events or alarms. Depending on the configuration, it can also function as a limit switch.
DO2 +, DO2 –	Discrete Output Switch 2 (+/-)	When a supply voltage of 5 to 30 V is applied, no current flows if the switch is set to 'Open', whereas current flows when the switch is set to 'Closed'. When the switch is in the ON state, the voltage drop across the switch is less than 1V, and the maximum allowable current is 1A. **Caution:** A load (e.g., a resistor) must be connected between the switch and the power supply. Connecting the switch directly to the power supply without a load may damage the switch. When the switch is in the OFF state, the current flowing through the switch is less than 0.1mA. To use the limit switch function, assign each output terminal to either Travel High or Travel Low using the DD/DTM tool, and then set the valve opening position at which the limit switch should operate. The default values are 100% for Travel High and 0% for Travel Low.
DI1 +, DI1 –	Discrete Input Switch (+/-)	A discrete input switch terminal capable of performing specific functions when the input is activated. When the input voltage is between 0 and 5 VDC, it is recognised as Open, and when the input voltage is between 10 and 30 VDC, it is recognised as Closed.

Table 5.1: Terminal Name and Description

5.3 Grounding

1) A grounding terminal is used to ensure operational safety, discharge static electricity, and protect the equipment from electrical surges.

2) This equipment has a total of three grounding terminals: one is located outside the terminal box, next to the upper cable entry; one is located inside the terminal box on the left side; and one is located inside the terminal box at the top. The grounding resistance must be maintained below 100 ohm.

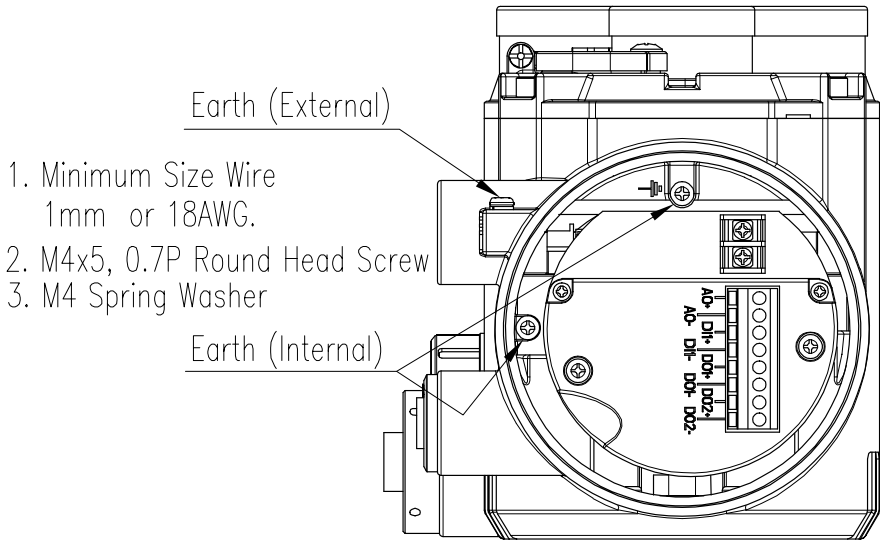

Fig. 5-5: Grounding

6.1 Position Feedback Magnet Kits

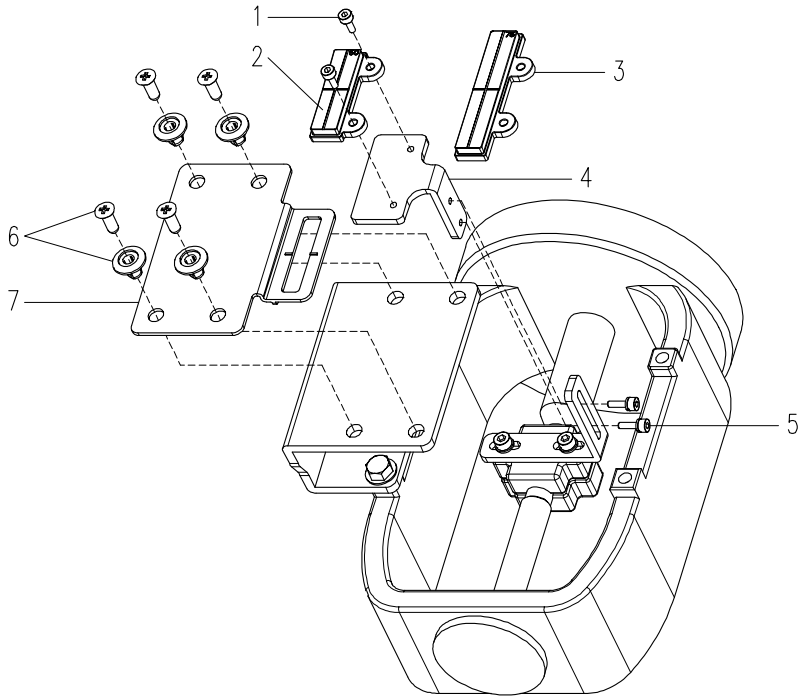

Fig. 6-1: Linear Magnet Kit with Numbered Components

No.	Part Name	Part Number	Qty	Tightening Torque [kgf·cm]
1) Linear Magnet Kit 120mm, Part Number: H4400L-0007				
2	Assy Linear Magnet 50	M110-2240	1	-
1	Bolt, M4x10, WH	M180-0413	2	20
4	LM Bracket	M231-0157	1	-
5	Bolt, M4x12, WH, W/S	M180-0414	2	30
7	Alignment Template	M231-0158	1	-
6	Bumper Pin	M400-0396	4	-
2) Linear Magnet Kit 150mm, Part Number: H4400L-0008				
3	Assy Linear Magnet 75	M110-2241	1	-
1	Bolt, M4x10, WH	M180-0413	2	20
4	LM Bracket	M231-0157	1	-
5	Bolt, M4x12, WH, W/S	M180-0414	2	30
7	Alignment Template	M231-0158	1	-
6	Bumper Pin	M400-0396	4	-

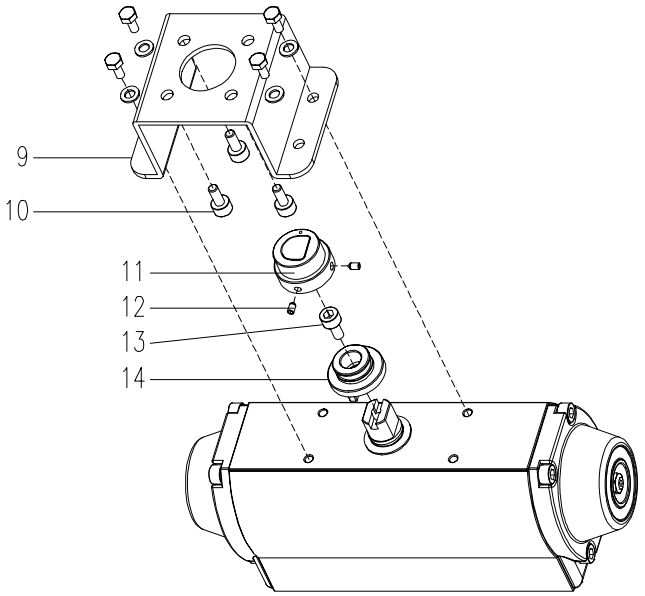

Fig. 6-2: Rotary Magnet Kit and Mounting Bracket Kit with Numbered Components

No.	Part Name	Part Number	Qty	Tightening Torque [kgf·cm]
3) Rotary Magnet Kit (M6), Part Number: H4400R-0013				
11	Assy Rotary Magnet	M110-2242	1	-
12	Screw Set, M4x6 , Nylok	M180-0415	2	10
14	Holder Actuator - M6	M110-2243	1	-
13	Bolt, M6x12, WH	M180-0416	1	60
4) Rotary Magnet Kit (M8), Part Number: H4400R-0014				
11	Assy Rotary Magnet	M110-2242	1	-
12	Screw Set, M4x6, Nylok	M180-0415	2	10
14	Holder Actuator – M8	M110-2244	1	-
13	Bolt, M8x12, WH	M180-0417	1	60
5) Rotary Bracket kit-1 (30x80,H20), Part Number: H4400R-0015				
9	Bracket Rotary-1	M231-0159	1	-
10	Bolt, M6x10, WH	M180-0356	4	60
6) Rotary Bracket kit-2 (30x80,H30), Part Number: H4400R-0016				
9	Bracket Rotary-2	M231-0160	1	-
10	Bolt, M6x10, WH	M180-0356	4	60
7) Rotary Bracket kit-3 (30x130,H30), Part Number: H4400R-0017				
9	Bracket Rotary-3	M231-0161	1	-
10	Bolt, M6x10, WH	M180-0356	4	60
8) Rotary Bracket kit-4 (30x130,H50), Part Number: H4400R-0018				
9	Bracket Rotary-4	M231-0162	1	-
10	Bolt, M6x10, WH	M180-0356	4	60

6.2 Spare Parts Kits

Maintenance parts are listed in the table below. Replacement intervals may vary depending on environmental and operating conditions such as air quality, installation location (indoor/ outdoor), salinity, temperature, humidity, toxic chemicals, vibration, and usage frequency.

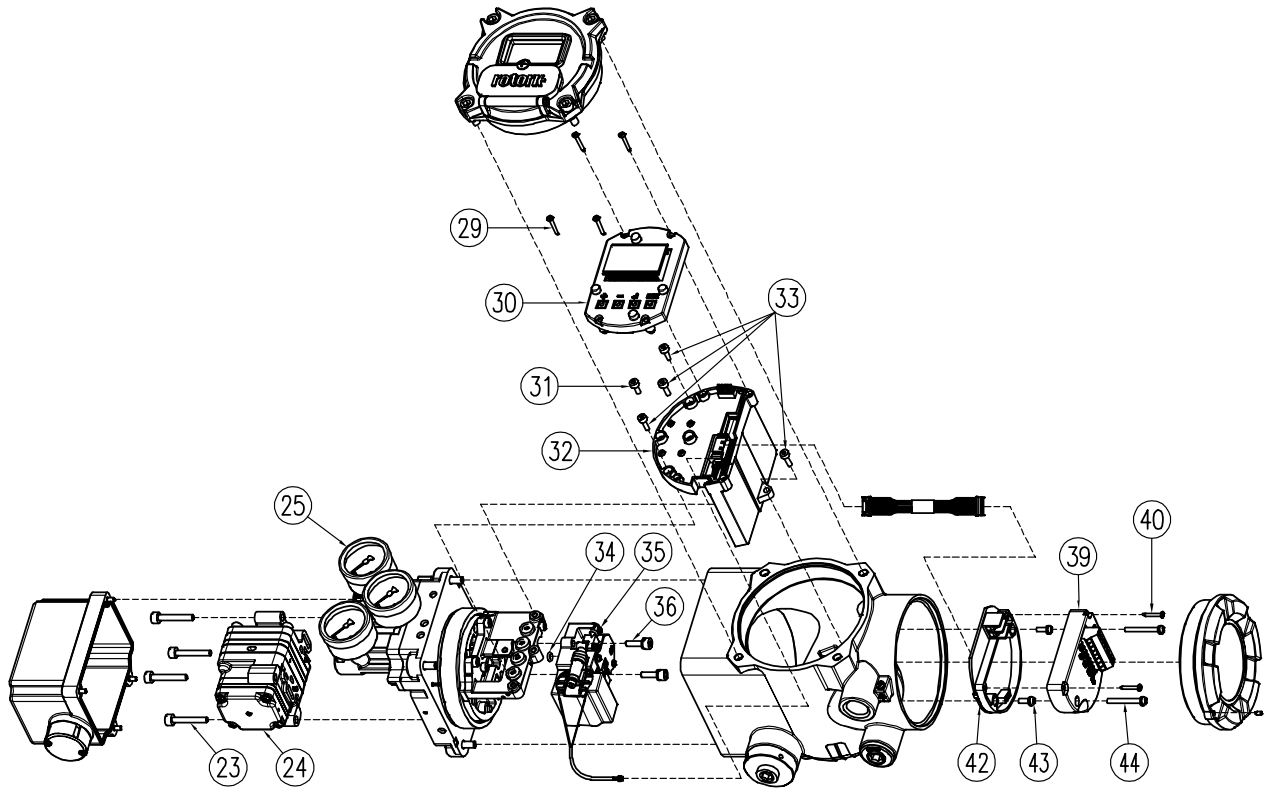

Fig. 6-3: Exploded View

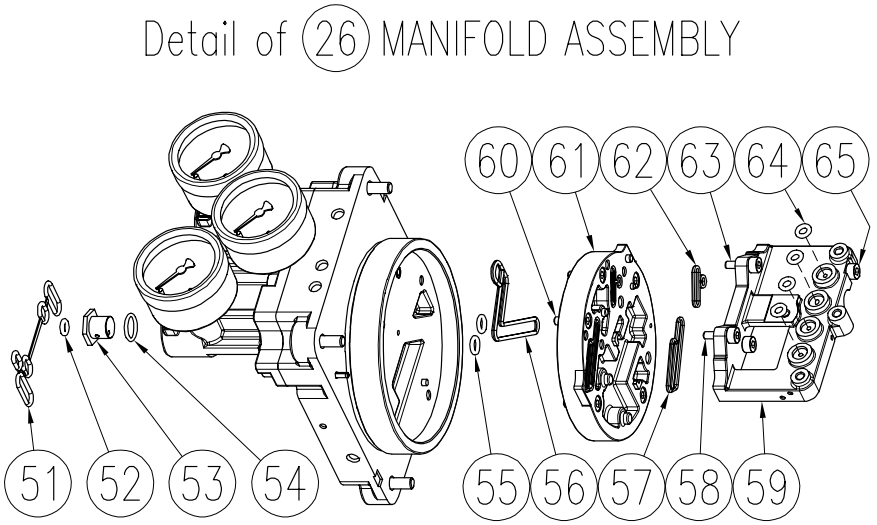

Fig. 6-4

No.	Part Name	Part Number	Qty	Tightening Torque [kgf·cm]
11) LCD PCBA Kit, P/N: H4400R-0073				
29	TAPPING SCREW, M3x20, RH	M180-0434	4	5
30	ASSY-LCD PCBA	H4400F-0072	1	-
12) Main PCBA Kit, P/N: H4400R-0074				
31	BOLT, M4x10, WH	M180-0413	1	15
33	BOLT, M4x12, WH	M180-0418	4	15
32	ASSY-MAIN PCBA	H4400F-0075	1	-
13) Pressure Gauge Kit, P/N: M232-0181				
25	Pressure gauge, Max. 13 bar	M232-0181	3	60
14) Pneumatic Relay Kit, Single Acting, Standard temp. P/N: H4400S-0009				
23	BOLT, M5x30, WH	M180-0419	4	25
24	Assy-Pilot, Single, Standard	H4400S-0007	1	-
15) Pneumatic Relay Kit, Single Acting, Arctic temp. P/N: H4400S-0010				
23	BOLT, M5x30, WH	M180-0419	4	25
24	Assy-Pilot, Single, Arctic temp.	H4400S-0008	1	-
16) Pneumatic Relay Kit, Double Acting, Standard temp. P/N: H4400D-0009				
23	BOLT, M5x30, WH	M180-0419	4	25
24	Assy-Pilot, Double, Standard	H4400D-0007	1	-
17) Pneumatic Relay Kit, Double Acting, Arctic temp. P/N: H4400D-0010				
23	BOLT, M5x30, WH	M180-0419	4	25
24	Assy-Pilot, Double, Arctic temp.	H4400D-0008	1	-
18) I/P Converter Kit, P/N: H4400F-0077				
35	Assy-Torque motor	H4400F-0076	1	-
36	BOLT, M5x16, WH, W/S	M180-0435	2	27
34	O Ring (P4)	M170-0610	1	-
19) Terminal main PCBA Kit, P/N: H4400F-0082				
42	Assy-Terminal main PCBA	H4400F-0078	1	-
43	BOLT, M4x10, RH, W/S	M180-0436	2	5
20) PTM option PCBA Kit, P/N: H4400F-0083				
39	Assy-Terminal option PCBA, PTM	H4400F-0079	1	-
44	BOLT, M4x30, RH, W/S	M180-0437	2	5
40	TAPPING SCREW, M3x16, RH	M180-0438	2	4
21) DI/DO option PCBA Kit, P/N: H4400F-0084				
39	Assy-Terminal option PCBA, DI/DO	H4400F-0080	1	-
44	BOLT, M4x30, RH, W/S	M180-0437	2	5
40	TAPPING SCREW, M3x16, RH	M180-0438	2	4
22) PTM+ DI/DO option PCBA Kit, P/N: H4400F-0085				
39	Assy-Terminal option PCBA, PTM+DI/DO	H4400F-0081	1	-
44	BOLT, M4x30, RH, W/S	M180-0437	2	5
40	TAPPING SCREW, M3x16, RH	M180-0438	2	4

7. Maintenance – Replacement

If the product is installed in an environment where it is heavily exposed to airborne contaminants, or if the quality of the supplied air is poor, the plug filter located at the centre of the product, which functions as a ventilation port, should be inspected regularly.

If the plug filter is partially or completely clogged, it must be cleaned or replaced. After removing the plug filter, use an air gun to blow strong air into the four holes to remove any foreign substances.

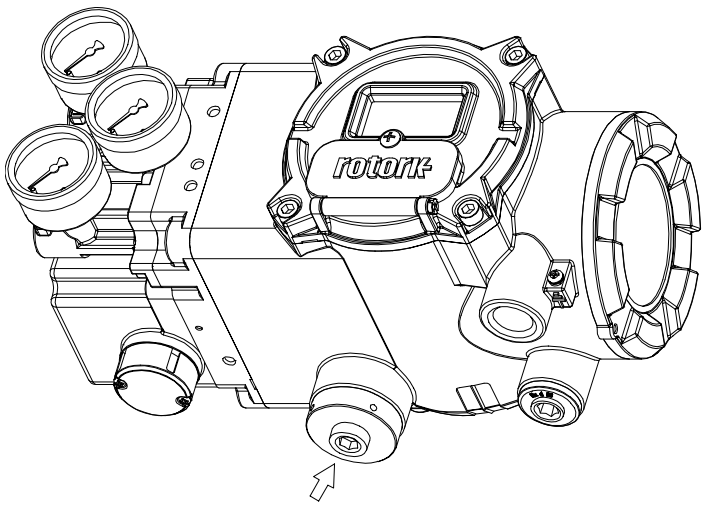

Fig. 7-1

⚠ CAUTION: Before replacing any parts, shut off the air supply and ensure that all pressure has been completely released.

When used in explosion-proof hazardous areas, the recommended tightening torques for reassembling the base cover are at least 60 kgf·cm.

⚠ CAUTION: After replacing the MAIN PCBA, torque motor, or pneumatic relay, it is mandatory to perform Auto Calibration 2 before operating the valve/actuator.

For product maintenance, refer to the part numbers listed in Section 6.1 or 6.2, as well as the exploded view in Fig 6-3 when replacement parts are needed.

7.1 Replacing the Pneumatic Relay

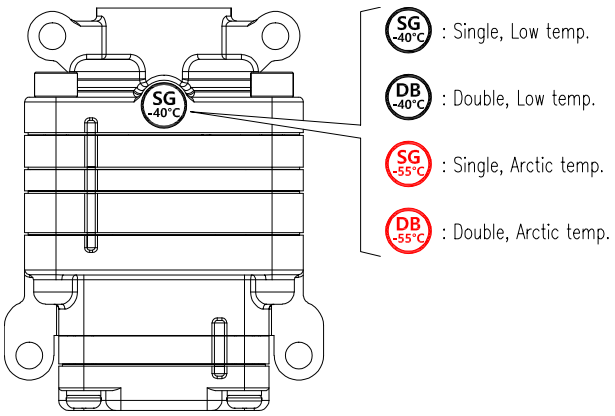

Fig. 7-2

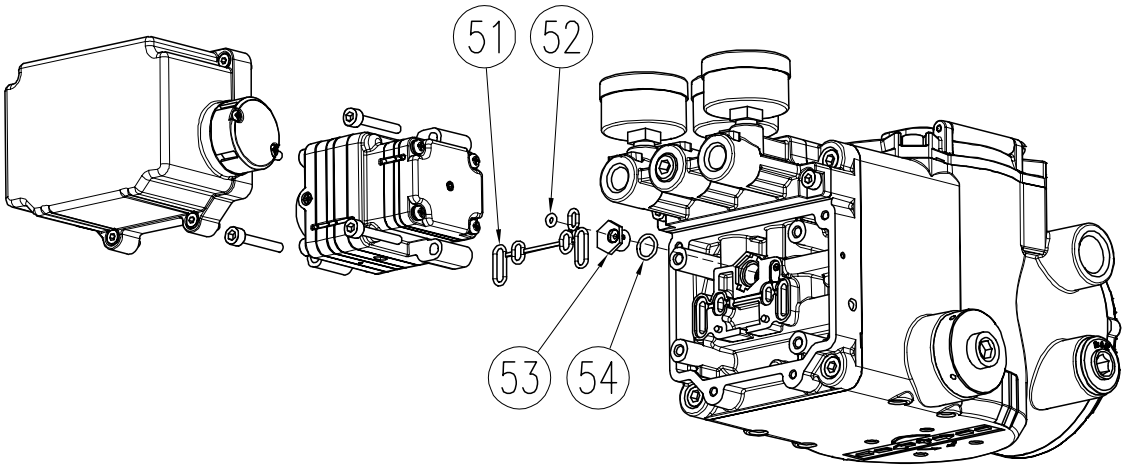

Fig. 7-3

7.2 Replacing the I/P Converter Kit

⚠ **CAUTION: The I/P converter is a highly sensitive component and must be handled with great care.**

Do not attempt to adjust any bolts or components located inside the I/P converter. Unauthorised adjustments may degrade control performance. Tighten the torque motor to the manifold assembly with a torque of 27 kgf·cm.

7.3 Replacing the Pressure Gauge

Refer to Figure 7-2.

Use an 11 mm spanner or a small adjustable wrench to loosen the square section at the bottom of pressure gauge (25), then remove the gauge.

When installing the new gauge, adjust the dial orientation to ensure clear visibility.

To maintain airtight sealing, apply Teflon tape or LOCTITE 572 to the threads.

7.4 Replacing the LCD PCBA

Before starting the replacement work, ensure that all supply pressure and electrical power are completely shut off. *Refer to Figure 6-3 for the locations of each component and submodule.*

The LCD PCBA is located at the bottom of the product's base cover.

Removal:

1) Loosen the four mounting bolts securing the base cover (5), then carefully remove the base cover.
2) Remove the bolts (6) securing the ASSY-LCD PCBA (7).
3) Carefully lift the ASSY-LCD PCBA (7) vertically to remove it from the unit.

Installation:

1) Align the ASSY-LCD PCB (7) with the screw holes on the ASSY-MAIN PCB and gently slide it into place.

   Note: The ASSY-LCD PCBA supports 180-degree reversible installation. The LCD orientation may be selected according to user preference. However, note that the text on the display may appear upside down depending on the selected orientation.
2) Fasten the ASSY-LCD PCB using bolt (6).
3) Align the base cover so that the LCD screen is visible through the window. Then, secure the base cover by tightening the four bolts. The recommended tightening torque is at least 60 kgf·cm.

7.5 Replacing the Main PCBA

Before starting the replacement work, ensure that all supply pressure and electrical power are completely shut off. *Refer to Figure 6-3* for the location numberings of each component and submodule.

The main PCBA is located below the LCD PCBA.

Removal:

1) Remove the LCD PCBA following the LCD PCBA removal procedure.
2) Remove the bolts (8) securing the ASSY-MAIN PCBA (9). The MAIN PCBA is fixed with a total of five bolts (8A, 8B, 8C), one of which (8C) is located deep inside the product. *Refer to Figure 6-3* to identify the exact location.
3) Disconnect the Main connector (10) and the T/M connector (11) connected to the MAIN PCBA.
4) Carefully lift the ASSY-MAIN PCB (9) upward to remove it.

Installation:

1) Insert the replacement ASSY-MAIN PCB (9) into the main body, and then connect the Main connector (10) and the T/M connector (11) respectively.
2) Adjust the position of the ASSY-MAIN PCB so that its bolt holes align precisely with the mounting points on the Manifold (13). Then, fasten the bolts (8). Note that a shorter bolt (8A) must be used in the leftmost hole. A total of five bolts are used, and the lower bolt (8C) must be used to ensure the ASSY-MAIN PCB is securely fixed to the enclosure. Failure to do so may affect the product's performance.
3) Assemble the LCD PCBA and the Base Cover(5) according to the LCD PCBA installation procedure.

7.6 Replacing the Terminal Main PCBA

Before starting the replacement work, ensure that all supply pressure and electrical power are completely shut off. *Refer to Figure 6-3* for the location numberings of each component and submodule.

The Terminal Main PCBA (22) is located at the bottom of the terminal cover. Depending on the product option, the Terminal Option PCBA (21) may or may not be installed.

Removal:

1) Using a 2 mm hex wrench, loosen the flat-head bolt (18) for the stopper, then rotate the Terminal Cover (17) counter-clockwise to remove it from the product.
2) Remove the bolt (20A) securing the Terminal Main PCBA (22).
3) Pull the Main Terminal PCBA (22) out of the product, then disconnect the main connector (10).

Installation:

1) Insert the replacement Terminal Main PCBA (22) Slightly into the right side of the main body, then connect the main connector (10).
2) Align the bolt holes of the Terminal Main PCBA with those on the main body, then fasten the bolt (20A).
3) Rotate the terminal cover (17) clockwise to securely attach it to the product, then firmly tighten the stopper flat-head bolt (18).

7.7 Replacing the Terminal option PCBA (PTM option PCBA, DI/DO option PCBA, PTM+ DI/DO option PCBA)

The terminal main PCBA (22) is located at the bottom of the terminal cover. Depending on the product configuration, the terminal option PCBA (21) may or may not be installed.

Terminal Option PCBA (21) is available in three configurations - PTM, DI/DO, and PTM + DI/DO - depending on the selected option. All configurations share the same fastening structure. Prepare the PCBA option that fits your intended use.

Removal:

1) Using a 2 mm hex wrench, loosen the stopper flat-head bolt (18), then rotate the Terminal Cover (17) counter-clockwise to remove it from the product.
2) Remove the bolt (20B) securing the Terminal Option PCBA (21) combined with the Terminal Main PCBA (22).
3) Pull out the Terminal Option PCBA (21) combined with the Terminal Main PCBA (22) from the product, then disconnect the main connector (10).
4) Remove the bolt (19) securing the Terminal Option PCBA (21) mounted on the Terminal Main PCBA.
5) Separate the Terminal Option PCBA (21) from the Terminal Main PCBA (22).

Installation:

1) Align the connector orientation and assemble the replacement Terminal Option PCBA (21) with the Terminal Main PCBA (22).
2) Secure the Terminal Option PCBA (21) to the Terminal Main PCBA (22) using the bolt (19)
3) Insert the Terminal Main PCBA (with the Terminal Option PCBA attached) into the right side of the main body. Then, connect the Main Connector (10).
4) Align the bolt hole of the Terminal Option PCBA with the corresponding bolt hole on the main body. Secure it in place using bolt (22B).
5) Rotate the terminal cover (17) clockwise to firmly attach it to the product. Then, fasten it securely using the stopper flat-head bolt (18).

8.1 Warning

⚠ **Auto-calibration must be performed during commissioning after the valve and positioner have been installed in the facility or process, or whenever the positioner has been removed from the actuator and reinstalled.**

⚠ **Prior to performing maintenance or auto-calibration, the valve must be isolated from the process. This is necessary because auto-calibration moves the valve/actuator assembly independently of the input signal, which may result in unintended process disturbances.**

8.2 Local User Interface

8.2.1 LCD Screen and Icons

The LCD screen consists of three main sections:

- **Top Status Bar**

  The Top Status Bar includes four NAMUR NE107 icons, which categorise alarm messages and provide intuitive visual indicators of the current process and positioner status.

  Assignment of each alarm to a specific category can only be performed via EDD or DTM tools. Additional icons in the Top Status Bar indicate the current device status or pressure in bar units.

- **Middle Data Display Bar**

  The Middle Data Display Bar shows the values of monitoring variables or internal parameters selected by the user. The far right end of the Middle Data Display Bar shows the unit of measurement for each data value.

- **Bottom Menu and Information Bar**

  The Bottom Menu and Information Bar displays the name of the selected menu or parameter, along with additional device-related information.

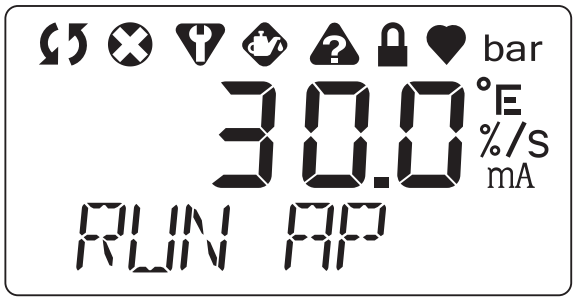

Fig 8-1: LCD Screen and Icons

Icons	Description
	Normal functioning
	NE107 Functional Check
	NE107 Out of Specifications
	Communication is active
°C	Temperature in °C
%	Percent
mA	Current in mA
	NE107 Failure
	NE107 Maintenance Required
	Write-protected mode
bar	Pressure in bar unit
°F	Temperature in °F
/s	Per second

Table 8-1: Display Icons and Descriptions

8.2.2 Buttons and Function

The product provides four buttons for user interface interaction, which allow the user to navigate through menus, configure parameters, and perform various functions of the product.

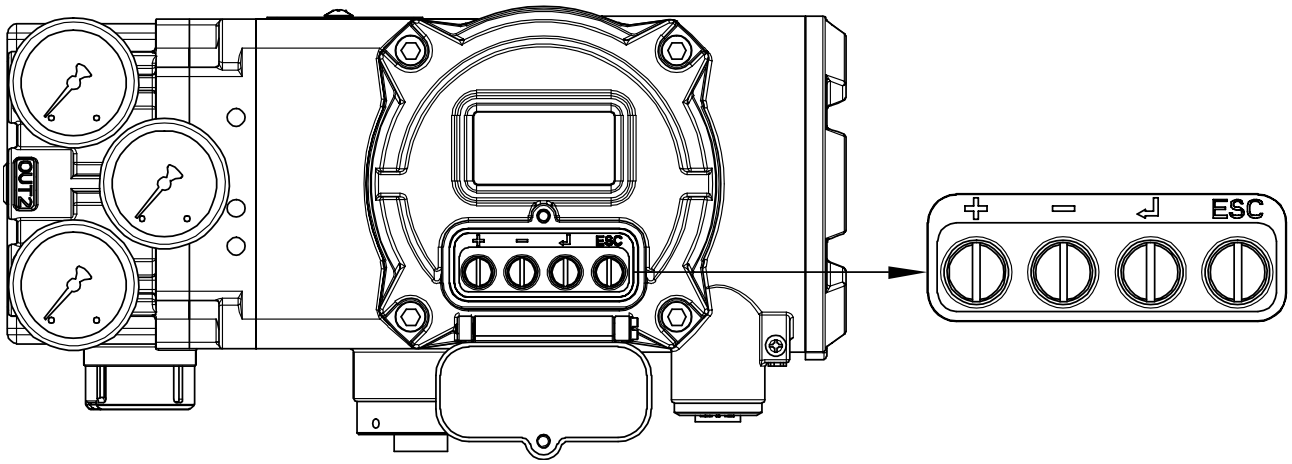

Fig 8-2: Buttons

Buttons	Functions
+	Navigate within the same menu level. Increase the value of the selected parameter.
–	Navigate within the same menu level in reverse order (opposite to the + button). Decrease the value of the selected parameter.
< ↵ > **ENTER**	Select the current menu or function. Save the modified parameter value.
ESC	Move one level up from the current menu.

Table 8-2: Button Functions

8.3 Menu Structure Overview

The basic menu structure consists of two main sections: RUN Mode Monitor and Configuration / Operation.

- The RUN Mode Monitor menu allows users to view various device variable values.
- The Configuration / Operation menu provides functions for valve calibration and tuning, manual operation, input/output port configuration, device configuration, diagnostic feature settings, and basic device information.

To navigate between RUN Mode Monitor and Configuration / Operation, as well as within each menu, refer to the menu structure and flow below.

To switch from Run Mode to Configuration and Operation, press and hold the < ↵ > for more than 3 seconds.

Run Mode Monitor	
RUN AP	Actual Position
RUN TP	Target Position
RUN dV	Deviation Value
RUN IV	Integral Value
RUN MV	Manipulator Value
RUN TEMP	Temperature
GOOd	Device / Process Status
RUN IN	Input Current
RUN SP	Set Position
RUN SUPPLY	Supply Pressure
RUN OUT 1P	Out 1 Pressure
RUN OUT 2P	Out 2 Pressure
RUN I/P	I/P Pressure
RUN FX	Friction
RUN NNN.N	AP and SP

ESC

< ↵ >

<+>/<–>

ESC+
<+>/<–>

Configuration and Operation	
CALIb	Calibration
MAN OPER	Manual Operation
CTRL PARM	Control Parameter
INPUT CFG	Input Configuration
OUTPUT CFG	Output Configuration
dEVICE CFG	Device Configuration
dIAGNOSIS	Diagnosis
INFO	Information

To enter a lower-level submenu from a specific item within the Configuration and Operation menu, press the < ↵ > button. After completing the task in the submenu, press the ESC button to return to the previous menu.

If you are not familiar with the menu structure, pressing the ESC button multiple times will return you to the top-level Run Mode Monitor screen.

8.4 RUN Mode Monitor



When current is applied to the product, RUN Mode is displayed on the LCD screen. As shown in the figure, various status variables can be monitored sequentially by operating the buttons. The value "30.0%" displayed on the LCD screen indicates that the valve is currently at 30% open. The label "AP" below stands for "Actual Position", representing the current valve opening.

The status variables to be displayed in RUN Mode Monitor are classified into 15 types as listed below.

Status Variables	Variable Name	Description
RUN AP [%]	Actual Position	The valve opening in a percentage
RUN TP [%]	Target Position	The target valve opening in a percentage.
RUN dV [%]	Deviation Value	The deviation between the target and actual valve opening in a percentage.
RUN IV	Integral Value	Cumulative integral value used in PID control.
RUN MV	Manipulator Value	The input value applied to the torque motor.
RUN TEMP[°C]	Temperature	The internal temperature of the product in °C.
** dS XXXX (PS XXXX)	**: Alarm Code dS: Device Status PS: Process Status XXXX: NE107 or Alarm abbreviations	The status of the device is represented by a four-letter English code, as shown in XXXX. Under normal conditions, the display shows GOOd. When a status change or alarm occurs, the display shows one of the NE107 abbreviations: MNTR, FAIL, OUTS, or FUNC. While an NE107 abbreviation is displayed, pressing the Enter button will show detailed information about the alarm or status, including the alarm / status code and corresponding abbreviation. (*See Section 8.15, Status and Alarm Codes*)
RUN IN [mA]	Input Current	Input current signal in mA.
RUN SP [%]	Set Position	Input current signal in %.
RUN SUPPLY [bar]	Supply Pressure	Supply pressure in bar.
RUN OUT 1P [bar]	Out 1 Pressure	Output 1 pressure in bar.
RUN OUT 2P [bar]	OUT 2 Pressure	Output 2 pressure in bar.
RUN I/P [bar]	I/P Pressure	I/P pressure in bar.
RUN FX [bar]	Friction	Friction in bar
RUN NNN.N	NNN.N: Set Position	AP value is displayed on the Middle Data Display Bar and SP value is shown as NNN.N on the Bottom Menu and Information Bar.

Table 8-3: The status Variables in Run Mode

When no alarm is present



When an alarm occurs

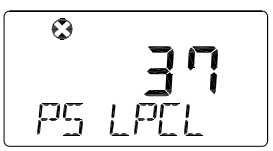

Alarm display details

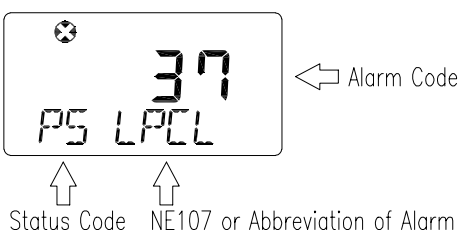

8.5 Configuration and Operation

The table 8-4 below shows the Configuration and Operation menu, which consists of eight categories, along with their respective submenus, parameter value ranges, and factory default settings.

The value shown in square brackets [ ] to the right of each menu name represents the abbreviation displayed during on the LCD screen operation.

Table 8-4: The Configuration and Operation Menu

Level 1	Level 2	Range	Default settings
Calibration [CALIb]	NCS Type [NCS]	[LINEAR, ROTARY]	LINEAR
	Acting Type	[SINGLE, dOUbLE]	SINGLE
	Auto Calibration 1 [AUTO CAL 1]		
	Auto Calibration 2 [AUTO CAL 2]		
	Auto Calibration 3 [AUTO CAL 2]		
	Travel Zero [TVL ZERO]		
	Travel End [TVL ENd]		
Manual Operation [MAN OPER]	Manual Operation by Set Position [MANUAL SP]		
	Manual Operation by Manipulator Value [MANUAL MV]		
Control Parameters [CTRL PARAM]	Dead Band [dEAdbANd]	0.1 - 10.0 [%]	0.3 %
	Proportional Gain, Upward [KP UP]	0.1 - 50.0	1
	Proportional Gain, Downward [KP dN]	0.1 - 50.0	1
	Integral Gain, Upward [TI UP]	0.1 - 50.0	1
	Integral Gain, Downward [TI dN]	0.1 - 50.0	1
	Differential Gain, Upward [Kd UP]	0.1 - 50.0	1
	Differential Gain, Downward [Kd dN]	0.1 - 50.0	1
	Gap Range [GAP]	0.1 - 5.0 [%]	1 %
	Gap Proportional Gain [GP]	0.1 - 5.0	1
	Gap Integral Gain [GI]	0.1 - 5.0	1
	Gap Differential Gain [Gd]	0.1 - 5.0	1
	Auto Dead Band Mode [AUTO db]	oFF, [0 %]	oFF
	Performance Mode [PER]	Stable, Normal, Fast [STAbLE, NORMAL, FAST]	NORMAL

Level 1	Level 2	Range	Default settings
Input Configuration [INPUT CFG]	Signal Direction [SIG]	Normal, Reverse [NORM, REVS]	NORM
	Split Range Mode [SPLIT]	4 - 20, 4 - 12, 12 - 20, Custom [4.20, 4.12, 12.20, CSt]	4.20
	Custom Split Range Zero [CST ZERO]	4 - 20.0 [mA]	4 mA
	Custom Split Range End [CST ENd]	4 - 20.0 [mA]	20 mA
	Characterisation [CHAR]	Linear, Quick Open, Equal Percent, User Set 5point, User Set 21point [LIN, QO, EQ, U5, U21]	LIN
	User Set Characterisation 5p [USER 5P]	0 - 110 [%]	0 %, 25 %, 50 %, 75 %, 100 %
	User Set Characterisation 21p [USER 21P]	0 - 110 [%]	0 %, 5 %, 10 %, … 95 %, 100 %
	Tight Shut Open [TSHUT OP]	0 - 100 [%]	100.0 %
	Tight Shut Close [TSHUT CL]	0 - 100 [%]	0.3 %
	TP Ramp Up Rate [RAMP UP]	oFF, 0.1 - 100 [%]	oFF
	TP Ramp Down Rate [RAMP dN]	oFF, 0.1 - 100 [%]	oFF
	Discrete Input Function [dIF]	[oFF, FCL, FOP, PSTA, PSTO]	oFF
	Discrete Input Logic [dI LOGIC]	[Lo, HI]	HI
Output Configuration [OUTPUT CFG]	4-20 mA Analogue Output Direction [PTM]	[NORM, REVS]	NORM
	4- 20 mA Analogue Output Zero [PTM ZERO]	0 - 100.00 [%]	
	4- 20 mA Analogue Output End [PTM ENd]	0 - 100.00 [%]	
	HART Feedback Direction [HART]	[NORM, REVS]	NORM
	Discrete Output 1 Activation [dO1 ACTIV]	[OFF, on]	OFF
	Discrete Output 1 Logic [dO1 LOGIC]	[Lo, HI]	HI
	Discrete Output 2 Activation [dO2 ACTIV]	[OFF, on]	OFF
	Discrete Output 2 Logic [dO2 LOGIC]	[Lo, HI]	HI
	Analogue Output Function(NE43) Activation [AOF]	[OFF, on]	OFF
	AO Current for Alarm Function [AO LOGIC]	[Lo, HI]	LO
Device Configuration [dEVICE CFG]	Action [ACT]	[dIR, REVS]	REVS
	Linear Interpolation [ITP]	[oFF, on]	on with Linear oFF with Rotary
	Write Protect [W]	[UNLOCKEd, LOCKEd]	UNLOCK
	View Mode [VIEW]	[NORM, REVS]	NORM
	Polling Address [POLL AddR]	[0 - 63]	0
	Temperature Unit [TEMP UNIT]	[°C, °F]	°C
	Pressure Unit [PRESS UNIT]	[bar]	Bar
	Factory Reset [dEFAULT]		
	Self-Test [SELF TEST]		

Level 1	Level 2	Range	Default settings
Diagnosis [dIAGNOSIS]	Process Status [PS]	[GOOd, FAIL, FUNC, OUTS, MNTR]	
	Device Status [DS]	[GOOd, FAIL, FUNC, OUTS, MNTR]	
	View Monitoring Counts [VIEW CNTS]		
	Reset Alarm Status [RST ALARM]		
	View Event Log [EVENT LOG]	1 – 200 [RECORd]	
Information [INFO]	Model Name	[RTP4400]	
	Diagnostic Level	[Advanced, Premium]	
	Software Version [SOFT VER]		
	Run Time [RT]		
	Upward Stroke Time [FULL OPEN]		
	Downward Stroke Time [FULL CLOSE]		
	Absolute Position [AbS]		
	HART Protocol Revision [HART VER]		

The following table outlines the selectable ranges and default settings for each parameter in Menu Level 2 and Menu Level 3, which represent one level deeper in the menu hierarchy.

Level 2	Level 3	Range	Default setting
View Monitoring Counts [VIEW CNTS]	Cycle Count [CYCLE CNT]	0 to 4,200,000,000	0
	Total Strokes [STROKES]	0 to 168,000,000	0
	Operating Count [OPER CNT]	0 to 4,200,000,000	0
	Full Open Count [FOPEN CNT]	0 to 4,200,000,000	0
	Full Close Count [FCLOSE CNT]	0 to 4,200,000,000	0

8.6 Calibration (CALIb)

The Calibration menu consists of the following eight items.

Calibration [CALIb]	NCS Type [NCS]	Select the NCS type [LINEAR, ROTARY]
	Single/Double [SINGLE/ dOUbLE]	Select the acting type [SINGLE, dOUbLE]
	Auto Calibration 1 [AUTO 1]	Calibrate the valve's zero and end positions only
	Auto Calibration 2 [AUTO 2]	Reinitialise all parameters required for valve operation.
	Auto Calibration 3 [AUTO 3]	Reinitialise zero position, end position, and control parameters required for valve operation.
	Travel Zero [TVL ZERO]	Manually adjust the valve's zero position.
	Travel End [TVL ENd]	Manually adjust the valve's end position.

Table 8-5: Calibration Menu

Auto calibration simplifies the calibration process by removing the need for complex gain tuning. After applying an input current within the range of 4 to 20 mA, the auto calibration process takes approximately 2 to 3 minutes to complete, depending on the size of the actuator. There are three types of auto calibration available, as listed below. Select the appropriate type based on your application requirements.

The following table shows the relationship between each Auto calibration type and reinitialised Parameters.

Menu	Parameters		AUTO1	AUTO2	AUTO3
Calibration [CALIb]	Travel Zero [TVL ZERO]	Zero position	O	O	O
	Travel End [TVL END]	End position	O	O	O
Control Parameters [CTRL PARAM]	Dead Band [dEAdbANd]	PID Gains	X	O	O
	Proportional Gain, Upward [KP UP]		X	O	O
	Proportional Gain, Downward [KP dN]		X	O	O
	Integral Gain, Upward [TI UP]		X	O	O
	Integral Gain, Downward [TI dN]		X	O	O
	Differential Gain, Upward [Kd UP]		X	O	O
	Differential Gain, Downward [Kd dN]		X	O	O
Input Configuration [INPUT CFG]	Signal Direction [SIG]	Input signal direction	X	O	X
	TP Ramp Up Rate [RAMP UP]	**Target position ramp rate**	X	O	O
	TP Ramp Down Rate [RAMP dN]		X	O	O
Output Configuration [OUTPUT CFG]	4-20 mA Analogue Output Direction [PTM]	Analogue output direction	X	O	X
	HART Feedback Direction [HART]	**HART feedback direction**	X	O	X
Device Configuration [dEVICE CFG]	Action [ACT]	Valve action type	X	O	X
	View Mode [VIEW]	Normal or inverse display on LCD	X	O	X
	Linear Interpolation [ITP]	Interpolation setting	O	O	O
-	BIAS		X	O	O

8.6.1 NCS Type Configuration

The RTP-4400 supports two types of Non-Contact Sensors (NCS): Linear and Rotary.

Select Linear when installing the sensor with a linear-type magnet on a linear valve, and select Rotary when using a rotary-type magnet on a rotary valve.

⚠ If the NCS type is configured incorrectly relative to the actual installation conditions, the positioner will not operate.

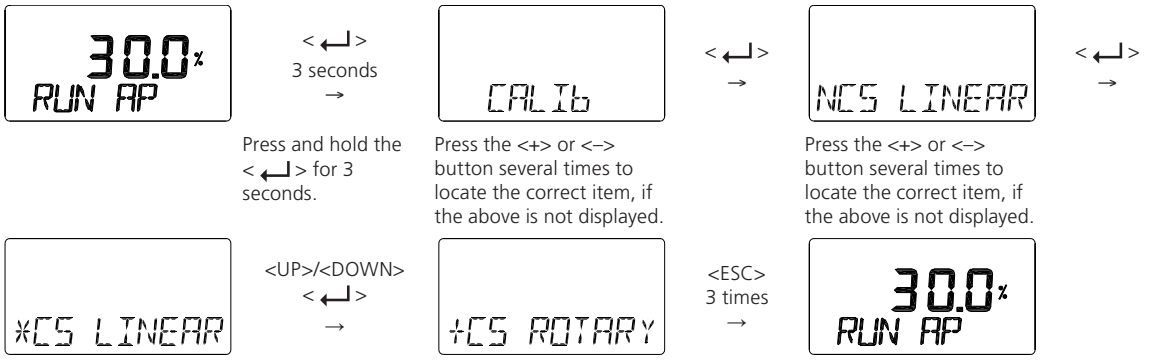

8.6.2 Single/Double Configuration (SINGLE / dOUbLE)

Set the product to SINGLE or DOUBLE mode according to the actuator's operating type.

⚠ If the configured mode does not match the actual operating type of the actuator, performance issues may occur. Ensure that the actuator's operating type is correctly matched with the product setting.

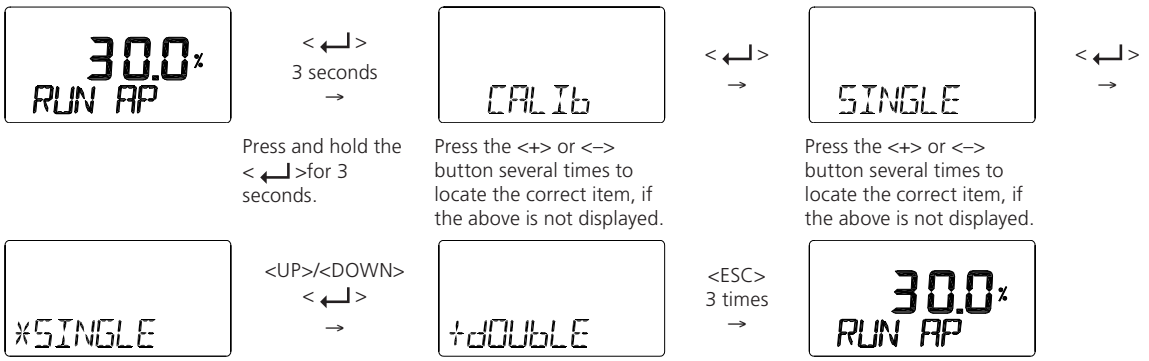

8.6.3 Auto Calibration 1 (AUTO 1)

AUTO 1 is used to reset only the zero and end positions. Existing PID and other parameter values will remain unchanged. This function is typically used when the device has already been calibrated, but the zero or end position has slightly shifted.

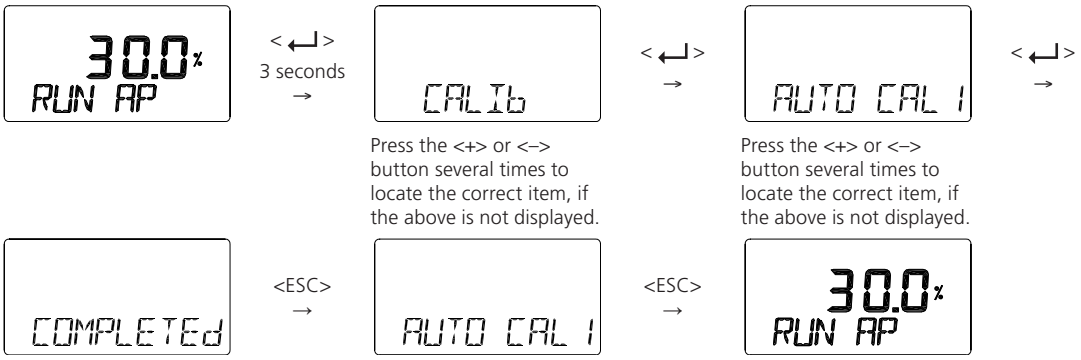

The following table shows the parameters reset after completion of Auto Calibration 1.

Menu	Parameters		Description
Calibration [CALIb]	Travel Zero [TVL ZERO]	Zero position	AUTO 1 is used to reset the valve stroke to the zero position when the pressure in the OUT1 port is fully released.
	Travel End [TVL ZERO]	End position	AUTO 1 is used to reset the valve stroke to the end position when the pressure in the OUT1 port is fully applied.

8.6.4 Auto Calibration 2 (AUTO 2)

AUTO 2 resets all parameters required for valve operation. It must be performed when the product is installed on the valve for the first time or reinstalled after being removed from the actuator.

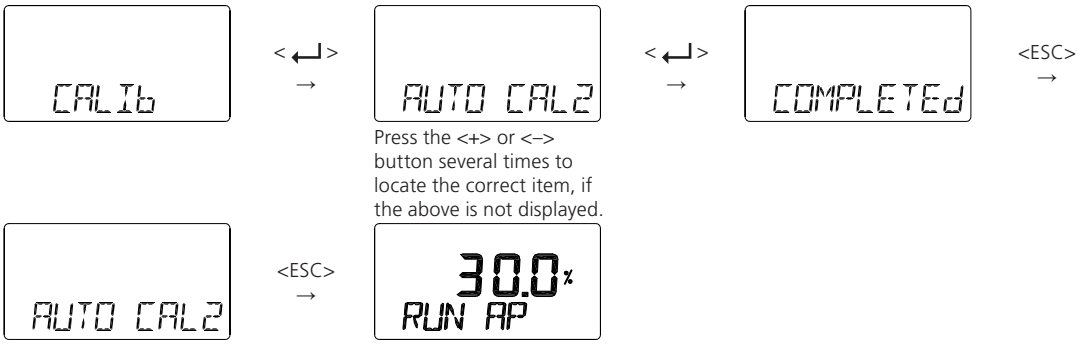

The following table shows the parameters reset after completion of Auto Calibration 2.

Menu	Parameters		Description
Calibration [CALIb]	Travel Zero [TVL ZERO]	Zero position	The valve stroke is reset to the zero position when the pressure in the OUT1 port is fully released.
	Travel End [TVL ZERO]	End position	The valve stroke is reset to the end position when the pressure in the OUT1 port is fully applied.
Control Parameters [CTRL PARAM]	PID Parameter [KP UP], [KP dN] [TI UP], [TI dN] [Kd UP], [Kd dN]	PID gains	The PID gains are auto-tuned based on the characteristics of the valve/ actuator.
Input Configuration [INPUT CFG]	Signal Direction [SIG]	Input signal direction	Initialise the input signal with normal (NORM) settings.
	SP Ramp Up Rate [RAMP UP]	Target position ramp rate	When the Performance mode is set to STABLE, the ramp rates are automatically calculated and applied. If the mode is set to NORM or FAST, this function is disabled.
	SP Ramp Down Rate [RAMP dN]		
Output Configuration [OUTPUT CFG]	4 - 20 mA Analogue Output Direction [PTM]	Analogue Output Direction	Initialise the Analogue Output signal with NORM settings.
	HART Feedback Direction [HART]	HART Feedback Direction	Initialise the HART Feedback Direction with NORM settings.
Device Configuration [dEVICE CFG]	Action [ACT]	Valve action direction	Initialise the Valve action with REVS settings.
	View Mode [VIEW]	Normal or inverse display on LCD	Initialise the LCD view with NORM settings.
-	BIAS		This value is automatically calculated and applied based on the characteristics of the valve/actuator.

8.6.5 Auto Calibration 3 (AUTO 3)

AUTO 3 resets the zero position, end position, and control parameters (PID) required for valve operation. It is primarily used when valve characteristics have changed due to aging or other operational factors.

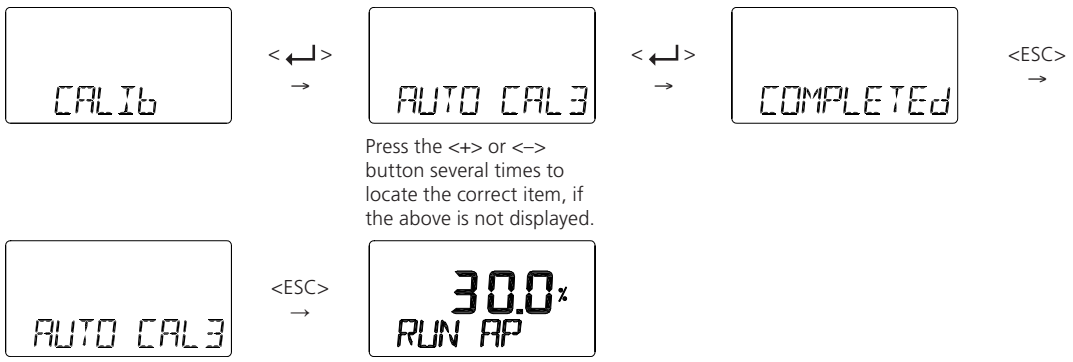

The following table shows the parameters reset after completion of Auto Calibration 3.

Menu	Parameters		Description
Calibration [CALIb]	Travel Zero [TVL ZERO]	Zero position	The valve stroke is reset to the zero position when the pressure in the OUT1 port is fully released.
	Travel End [TVL ZERO]	End position	The valve stroke is reset to the end position when the pressure in the OUT1 port is fully applied.
Control Parameters [CTRL PARAM]	PID Parameter [KP UP], [KP dN] [TI UP], [TI dN] [Kd UP], [Kd dN]	PID gains	The PID gains are auto-tuned based on the characteristics of the valve/ actuator.
Input Configuration [INPUT CFG]	SP Ramp Up Rate [RAMP UP]	Target position ramp rate	When the Performance mode is set to STABLE, the ramp rates are automatically calculated and applied. If the mode is set to NORM or FAST, this function is disabled.
	SP Ramp Down Rate [RAMP dN]		
-	BIAS		This value is automatically calculated and applied based on the characteristics of the valve/actuator.

8.6.6 Valve Zero Position (TRAVEL ZERO, TVL ZERO) and Valve End Position (TRAVEL END, TVL ENd)

This function allows manual adjustment of the valve's zero or end position after Auto Calibration.

After entering the TRAVEL ZERO (or TRAVEL END) setting, press the <UP>/<DOWN> buttons to adjust the valve's zero (or end) position. Once the desired position is set, press the <↵> button to save the setting. The current position will then be recognised as the valve's zero (or end) position.

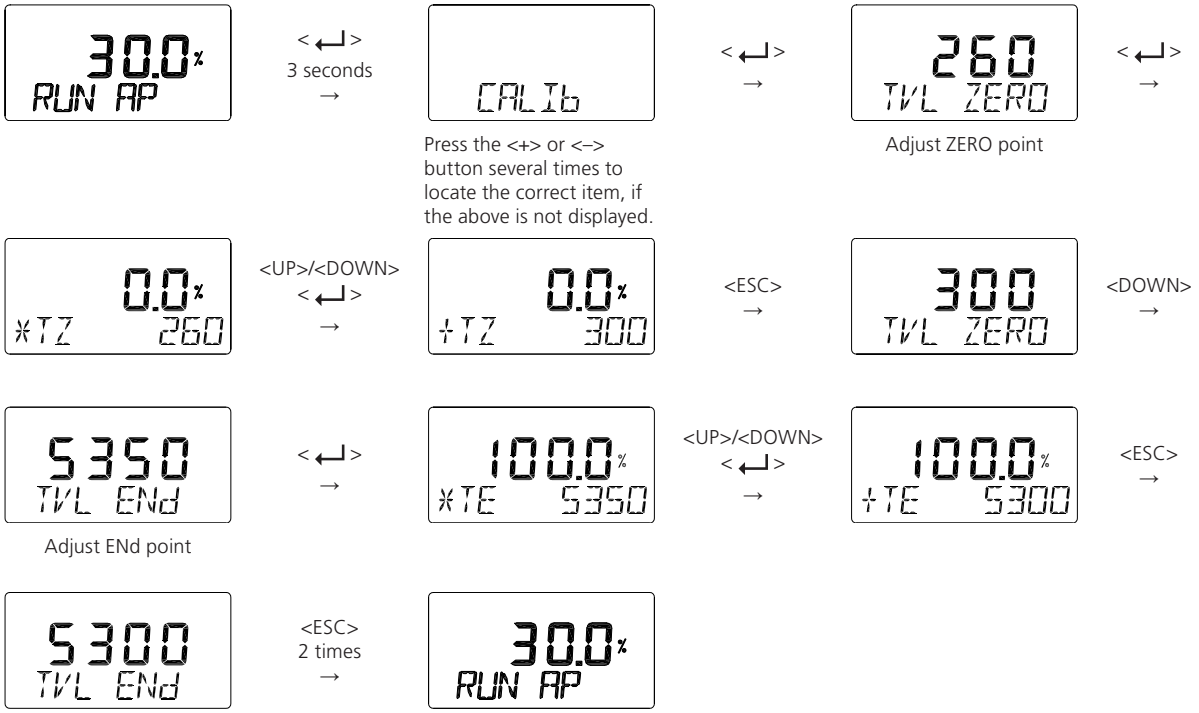

8.7 Manual Operation (MAN OPER)

This function allows manual movement of the valve stem using the <UP> or <DOWN> buttons regardless of external input signals. While in this mode, the current signal input to the product has no effect on its operation.

⚠ **Activating the Manual Operation may affect the running process. Use this mode only when the process is stopped or when operating the control valve will not cause any issues.**

8.7.1 Manual Operation via Set Position Adjustments (MAN SP)

Based on the currently set position value, the <UP> or <DOWN> button increases or decreases the Set Position, causing the valve stem to move upward or downward accordingly. When exiting the menu using the <ESC> button, the device resumes control based on the input signal.

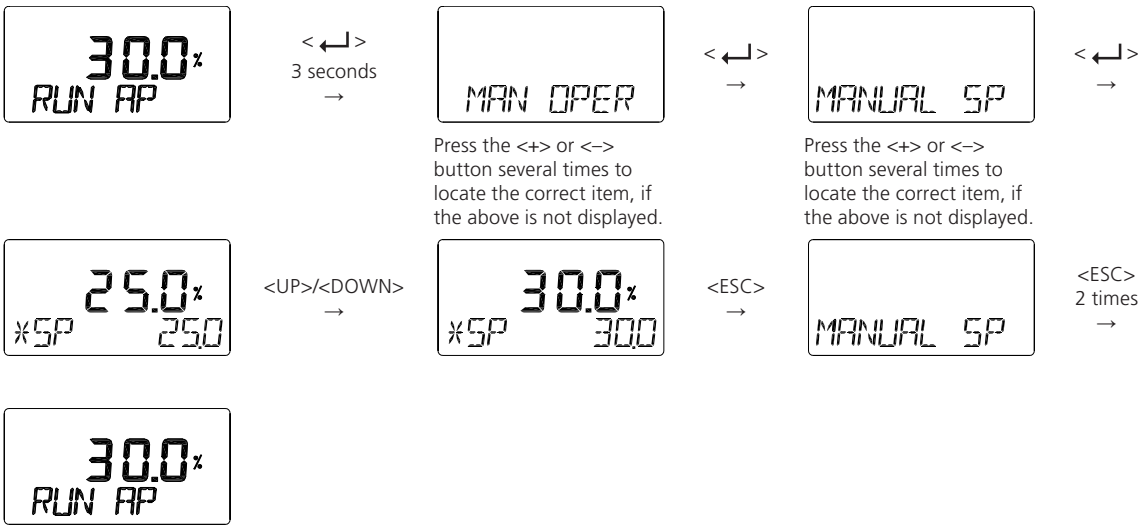

8.7.2 Manual Operation by Manipulator Value (MAN MV)

Based on the current I/P converter control value, the <UP> or <DOWN> button increases or decreases the input value to the I/P converter, causing the valve stem to move upward or downward accordingly. When exiting the menu using the <ESC> button, the device resumes control based on the input signal.

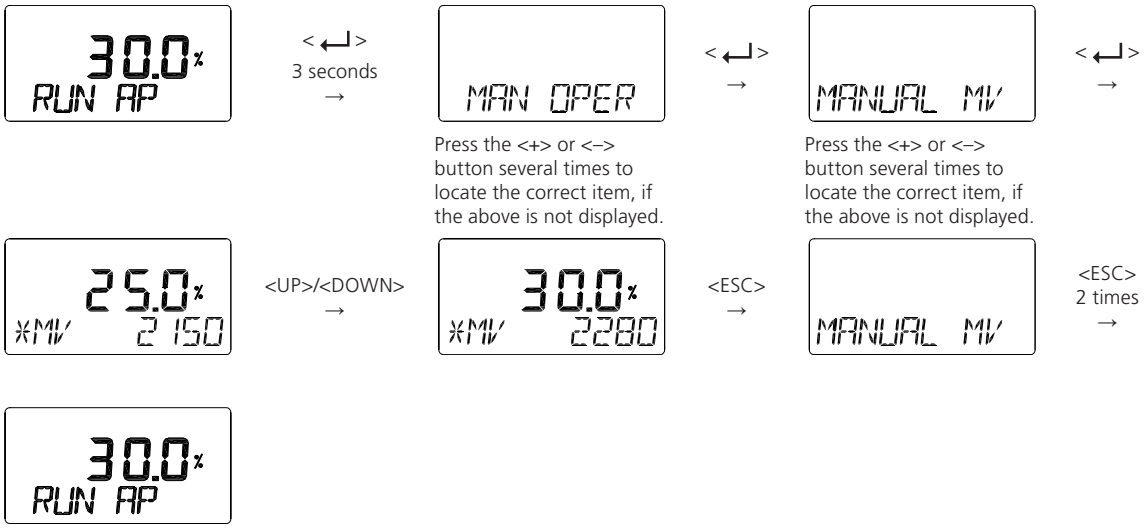

8.8 Control Parameters (CTRL PARAM)

The following parameters can be modified in the control parameter mode.

1) **Dead Band (dEAdbANd)**
2) **Proportional Gain Parameter – Forward (KP UP) / Reverse (KP dN)**
3) **Integral Gain Parameter - Forward (TI UP) / Reverse (TI dN)**
4) **Derivative Gain Parameter - Forward (Kd UP) / Reverse (Kd dN)**
5) **GAP Control Range Parameter (GAP)**
6) **Proportional Gain Parameter in Gap Control (GP)**
7) **Integral Gain Parameter in Gap Control (GI)**
8) **Derivative Gain Parameter in Gap Control (Gd)**
9) **Auto Dead band Mode (AUTO db)**
10) **Performance Mode (PER STAbLE / NORMAL / FAST)**

8.8.1 Dead Band (dEAdbANd)

This parameter defines the allowable deviation near the target position. When the valve has high packing friction, which may cause hunting or oscillation, adjusting this value appropriately can prevent limit cycles caused by friction and ensure stable operation.

If the dead band is set to 0.5%, the control range will be ±0.5% around the target position.

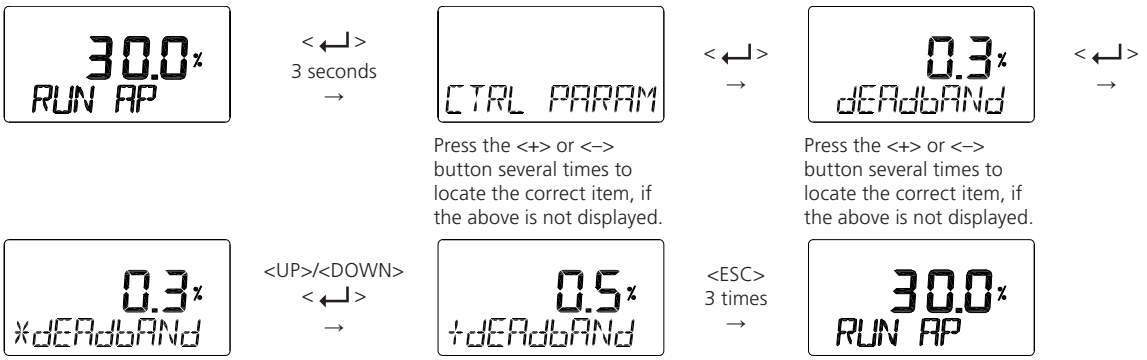

8.8.2 Proportional Gain Parameters in Forward (KP UP) and Reverse Directions (KP dN)

The KP parameter is a proportional gain value used in feedback control to reduce the error between the target point and the current position. It generates a correction signal to guide the system toward the desired setpoint. KP UP refers to the gain applied when the actuator moves in the direction of increasing output pressure. KP DN refers to the gain applied when the actuator moves in the direction of decreasing output pressure.

Increasing the KP UP or KP DN value allows the system to reach the target point more quickly, but may lead to hunting or oscillation. Conversely, decreasing the value improves system stability but slows down the response time to reach the target.

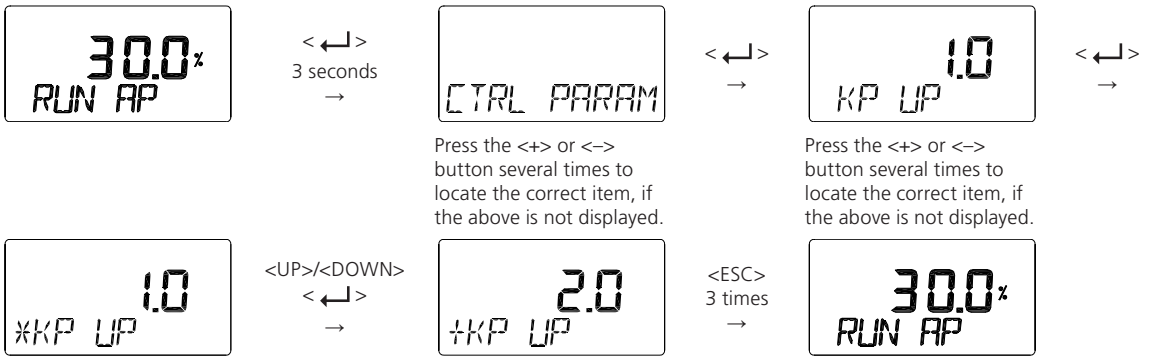

8.8.3 Integral Gain Parameters in Forward (TI UP) and Reverse Directions (TI dN)

The TI parameter is an integral time gain value used in integral control to generate a correction signal based on accumulated error over time. TI UP is applied when the actuator moves in the direction of increasing output pressure. TI DN is applied when the actuator moves in the direction of decreasing output pressure. A smaller TI value may result in faster response but increases the likelihood of oscillation. A larger TI value improves stability but increases the time required to reach the target point.

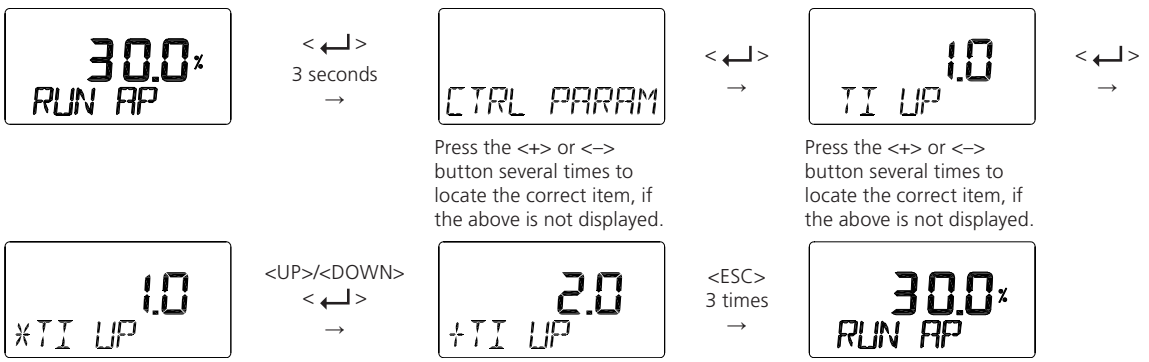

8.8.4 Derivative Gain Parameters in Forward (Kd UP) and Reverse Directions (Kd dN)

The Kd parameter is a derivative gain value used in derivative control to generate a correction signal based on the rate of change of error. Kd UP is applied when the actuator moves in the direction of increasing output pressure. Kd dN is applied when the actuator moves in the direction of decreasing output pressure. A larger Kd value can improve responsiveness but may lead to hunting or instability.
A smaller Kd value may reduce oscillation but can negatively affect linearity and dynamic performance.

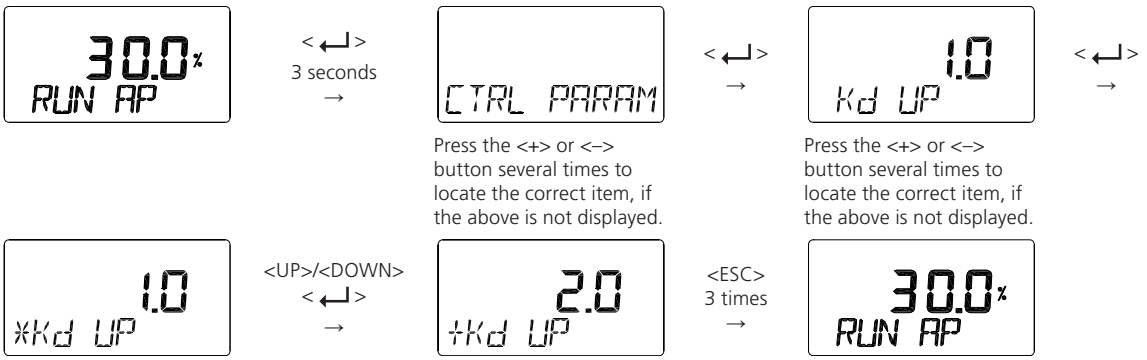

8.8.5 Gap Control Range (GAP)

The GAP parameter defines the control range (%) in which Gap Control operates. When the valve's current position enters the range defined by the target position ± GAP, Gap Control is activated in addition to PID Control.

Once Gap Control is active, the valve is controlled using a combination of the standard PID parameters (KP, KI, KD) and the PID GAP parameters (GAP P, GAP I, GAP D).

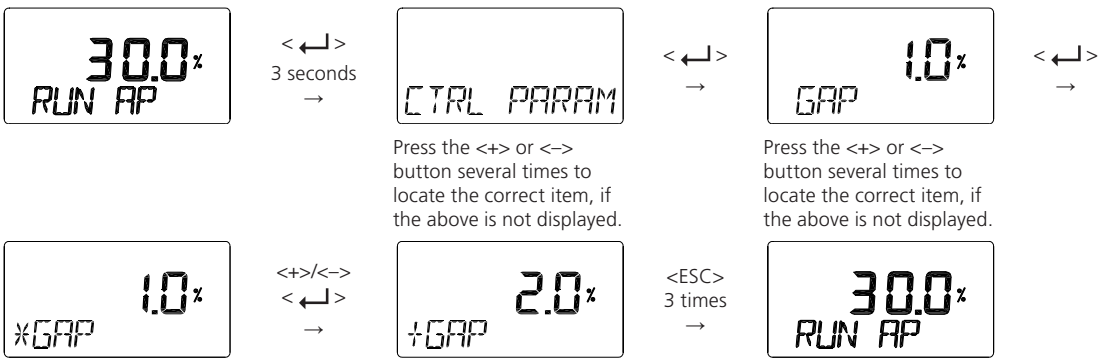

8.8.6 Proportional Gain Parameter in Gap Control (GP)

The GP parameter is a proportional gain applied when the valve opening position is within the range defined by the GAP parameter. In this condition, a new proportional gain is calculated based on both KP and GP, and this gain is applied to valve control.

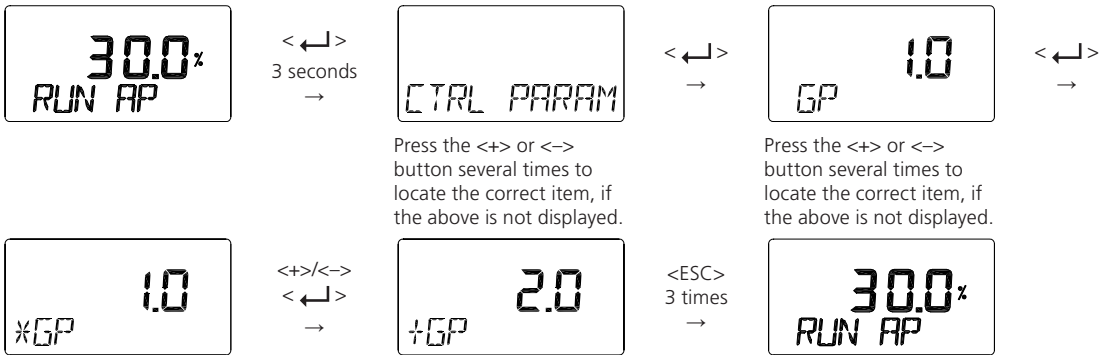

8.8.7 Integral Gain Parameter in Gap Control (GI)

The GI parameter is an integral gain applied when the valve opening position is within the range defined by the GAP parameter. Under this condition, a new integral gain is calculated based on 1/TI and GI, and this gain is applied to valve control.

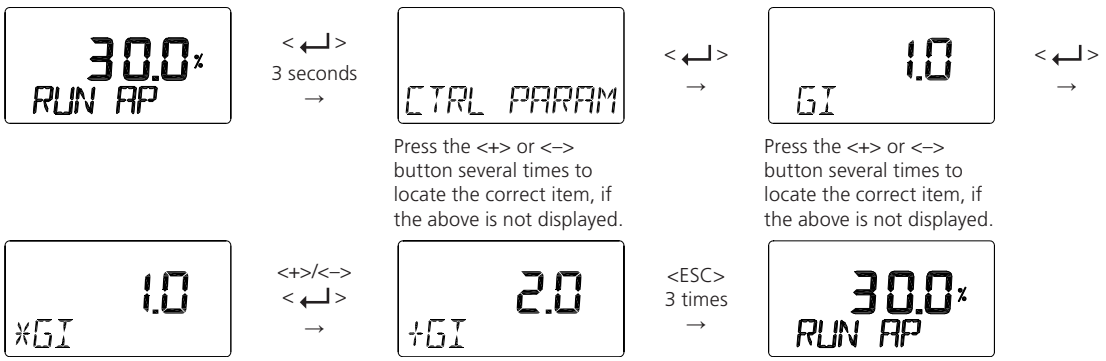

8.8.8 Derivative Gain Parameter in Gap Control (Gd)

The GD parameter is a derivative gain applied when the valve opening position is within the range defined by the GAP parameter. Under this condition, a new derivative gain is calculated based on both Kd and Gd, and this gain is applied to valve control.

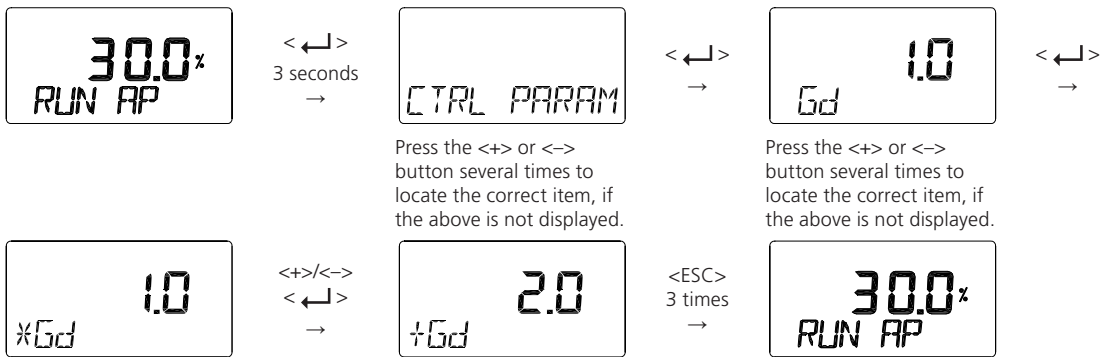

8.8.9 Auto Dead Band Mode (AUTO db)

For valves with high static friction, hunting may occur during operation. To suppress such hunting behaviour, the Auto Deadband mode can be used.

The initial setting is OFF. To enable the function, set the value to 0%. Once set to 0%, and the valve begins to operate, the Auto Deadband function becomes active. The displayed value of 0% will automatically change to a suitable percentage (%) based on the valve movement and characteristics.

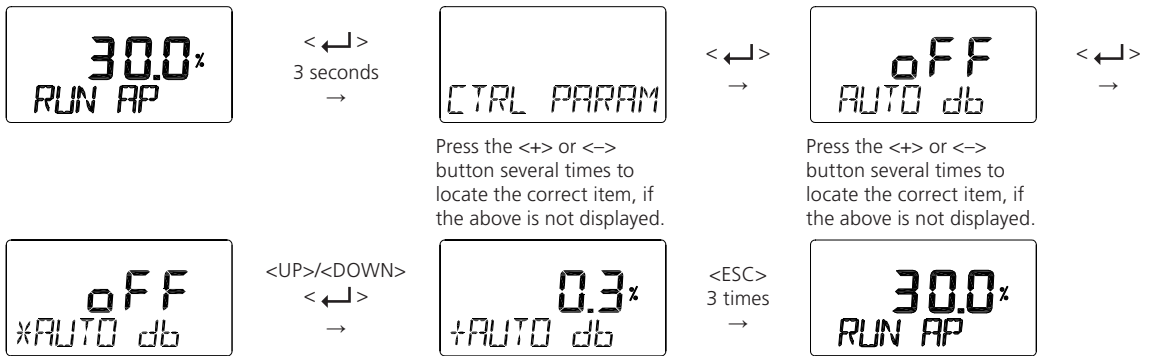

8.8.10 Performance Mode (PER STAbLE / NORMAL / FAST)

This mode provides three selectable operation modes – Stable, Normal, and Fast – allowing users to adjust the control performance of the positioner.

The control gains are set to provide different response characteristics:

- Stable: Low response speed, high stability
- Normal: Balanced response and stability
- Fast: High response speed, lower stability

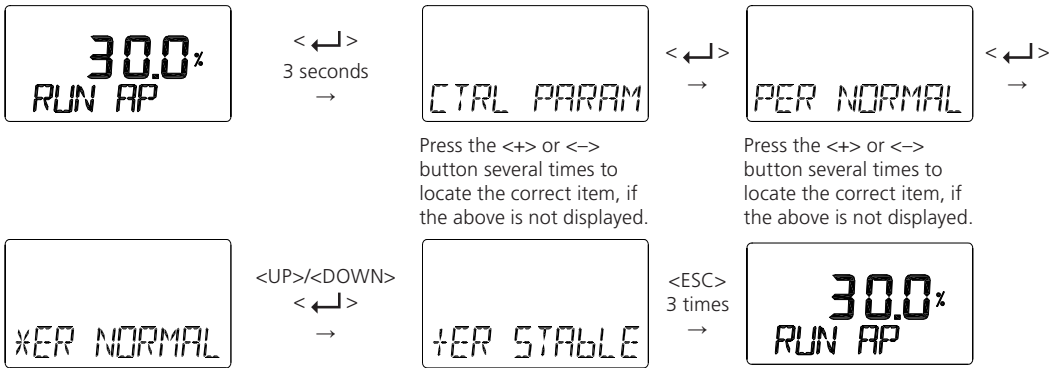

8.9 Input Configuration (IN CFG)

The following parameters can be configured in the Input Configuration:

1) **Signal Direction (SIG NORM / REVS)**
2) **Split Range Mode (SPLIT 4.20 / 4.12 / 12.20 / CSt)**
3) **Custom Split Range Zero (CST ZERO)**
4) **Custom Split Range End (CST ENd)**
5) **Characterisation Curves (CHAR LIN / EQ / USER 5P / USER 21P)**
6) **User Set Characterisation 5 Points (USER 5P)**
7) **User Set Characterisation 21 Points (USER 21P)**
8) **Tight Shut Open (TSHUT OP)**
9) **Tight Shut Close (TSHUT CL)**
10) **Target Position Ramp Up Rate (RAMP UP), Target Position Ramp Down Rate (RAMP dN)**
11) **Discrete Switch Input Function (dIF OFF / FCL / FOP / PSTA / PSTO)**
12) **Discrete Switch Input Logic (dI LOGIC HI / Lo)**

8.9.1 Signal Direction (SIG NORM / REVS)

This function allows the user to change the valve action type. Two options are available: NORM and REVS.

When NORM is selected:

- At an input current of 4 mA, the air pressure inside the actuator is fully exhausted to atmosphere through Output Port 1 and the internal path of the device positioner.
- At 20 mA, maximum pressure is loaded into the actuator through Output Port 1.

When REVS is selected, the action is reversed.

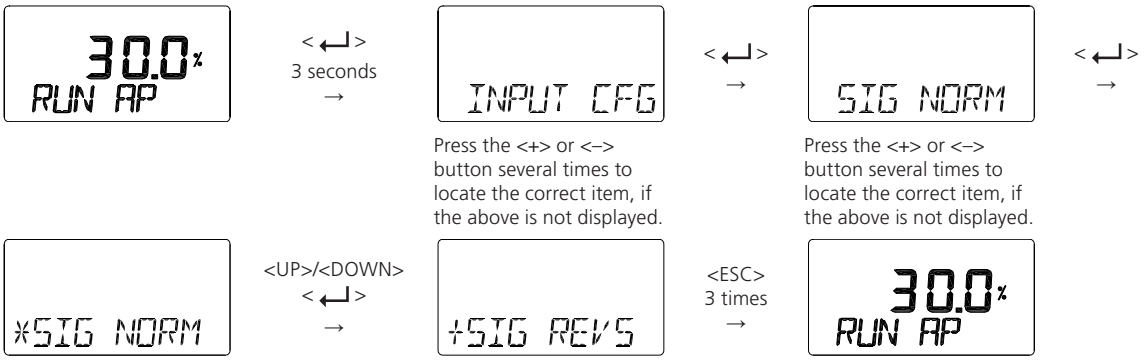

8.9.2 Split Range Mode (SPLIT 4.20 / 4.12 / 12.20 / CSt)

This mode allows the user to define the input signal range used to control the full stroke of the valve. Four options are available:

- 4-20 mA
- 4-12 mA
- 12-20 mA
- Custom (CSt)

The default factory setting is 4–20 mA.

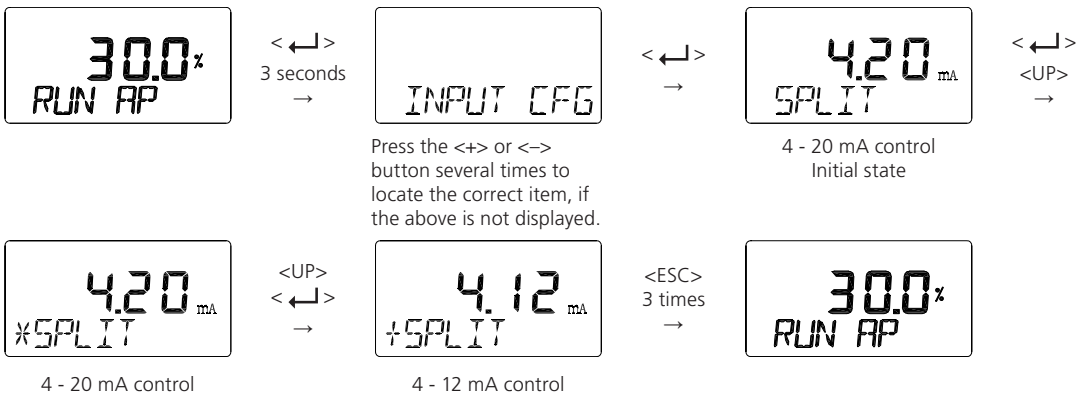

8.9.3 Custom Split Range Zero (CST ZERO)

This setting is used to define the zero position current value when controlling valve opening from 0% to 100% using a user-defined input current range. For example, if the valve is controlled using 6-20 mA instead of the standard 4-20 mA, then 6 mA is set as the zero position.

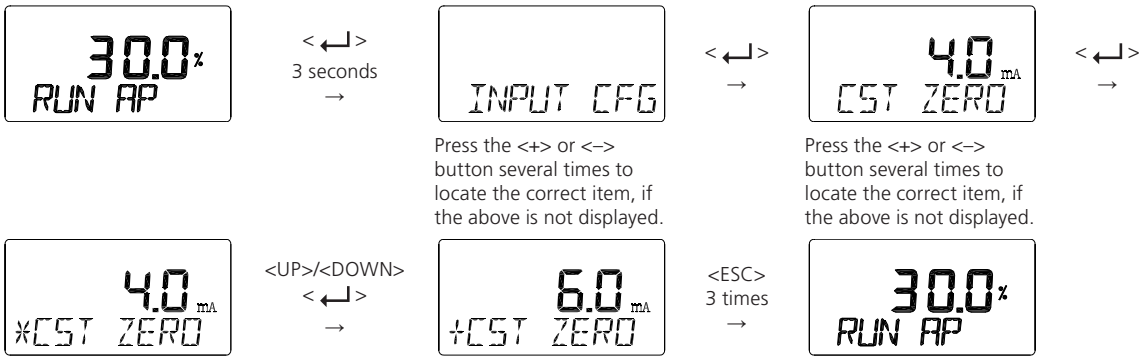

Note: This function is activated by saving the Split Range Mode (SPLIT) setting as "CSt" in Section 8.9.2.

8.9.4 Custom Split Range End (CST ENd)

This setting is used to define the end point current value when controlling valve opening from 0% to 100% using a user-defined input current range. For example, if the valve is controlled using 4-18 mA instead of the standard 4-20 mA, then 18 mA is set as the end position.

Note: The difference between the zero point and the end point must be at least 4 mA.

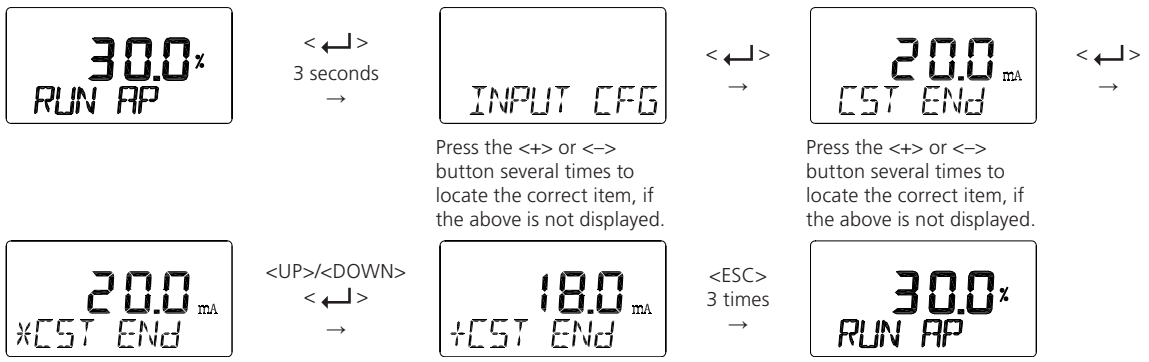

Note: This function is activated by saving the Split Range Mode (SPLIT) setting as "CSt" in Section 8.9.2.

8.9.5 Characterisation Curves (CHAR LIN / QO / EQ / USER 5P / USER 21P)

The valve's flow characteristic curve can be selected from the following options:

- Linear (LIN)
- Quick Open (QO)
- Equal Percentage (EQ)
- User Set Characterisation – 5 Points (USER 5P)
- User Set Characterisation – 21 Points (USER 21P)

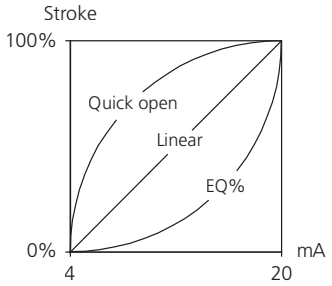

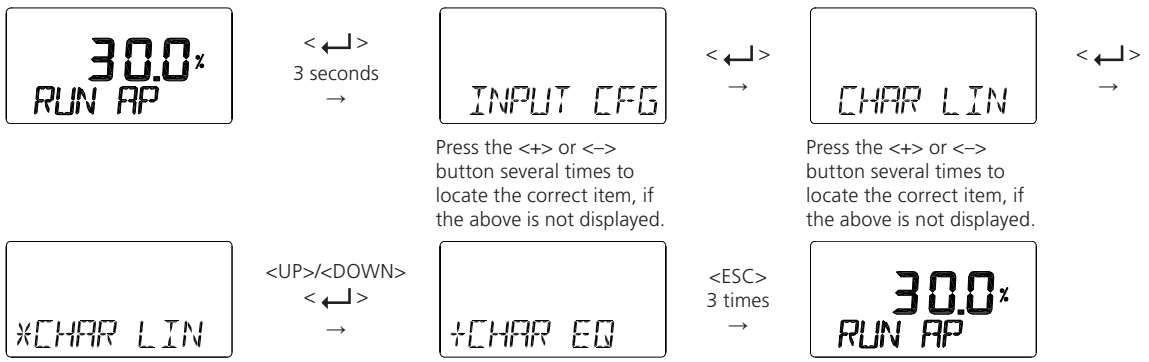

8.9.6 User Set Characterisation 5 Points (USER 5P)

Up to five points can be configured at 4 mA intervals.
The factory default settings are:

- P0: 4 mA → 0%
- P1: 8 mA → 25%
- P2: 12 mA → 50%
- P3: 16 mA → 75%
- P4: 20 mA → 100%

These percentage values can be modified as needed. You may change all five points or only selected points. If you wish to keep the remaining points unchanged, simply press <ESC> during the setting process to exit.

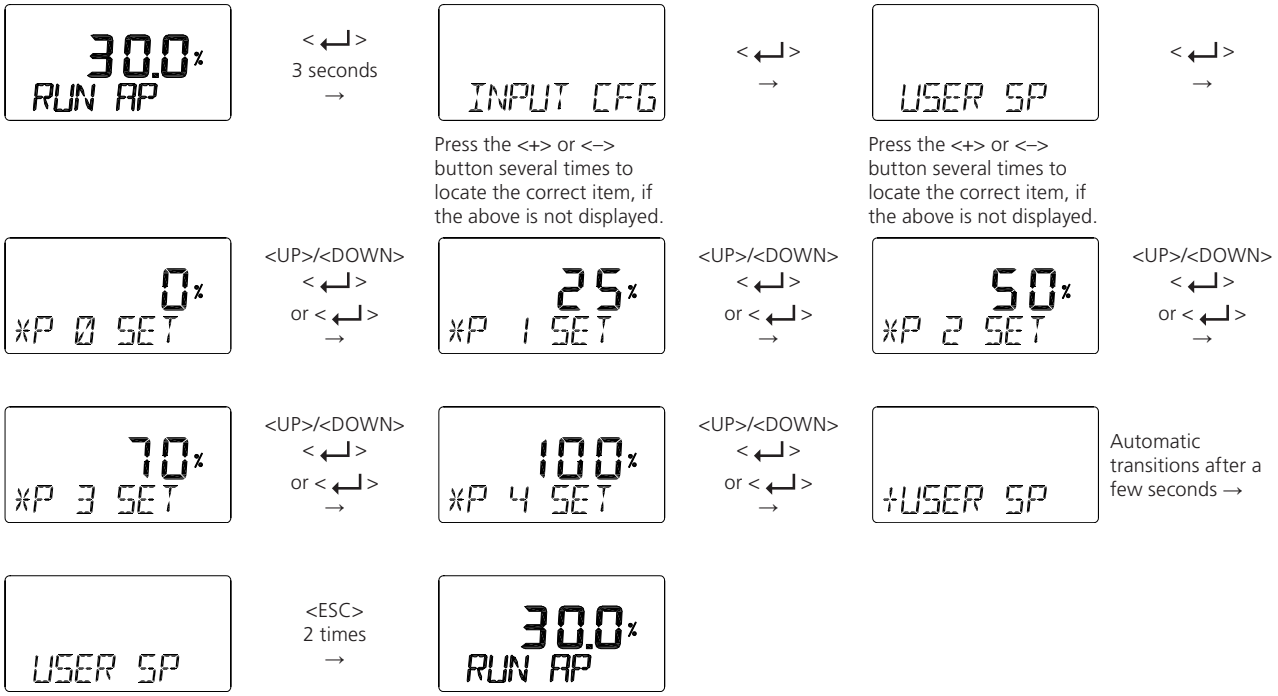

Note: This function is activated by saving the Characterisation Curves setting as "USER 5P" in Section 8.9.5, Characterisation Curves.

8.9.7 User Set Characterisation 21 Points (USER 21P)

Up to 21 points can be configured at 0.8 mA intervals. The factory default settings are:

- P0: 4.0 mA → 0%
- P1: 4.8 mA → 5%
- P2: 5.6 mA → 10%
- ...
- P19: 19.2 mA → 95%
- P20: 20.0 mA → 100%

These percentage values can be modified as needed. You may change all 21 points or only selected points. If you wish to keep the remaining points unchanged, simply press <ESC> during the setting process to exit.

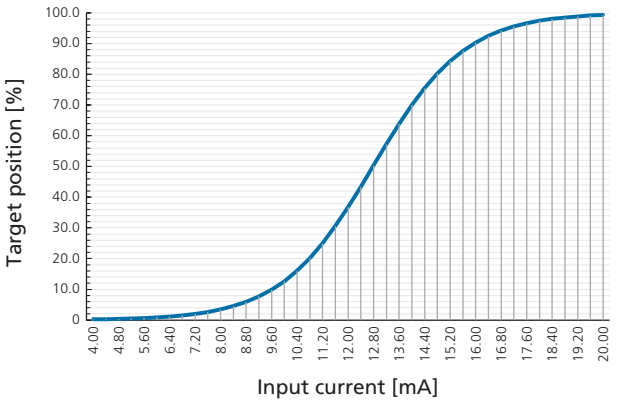

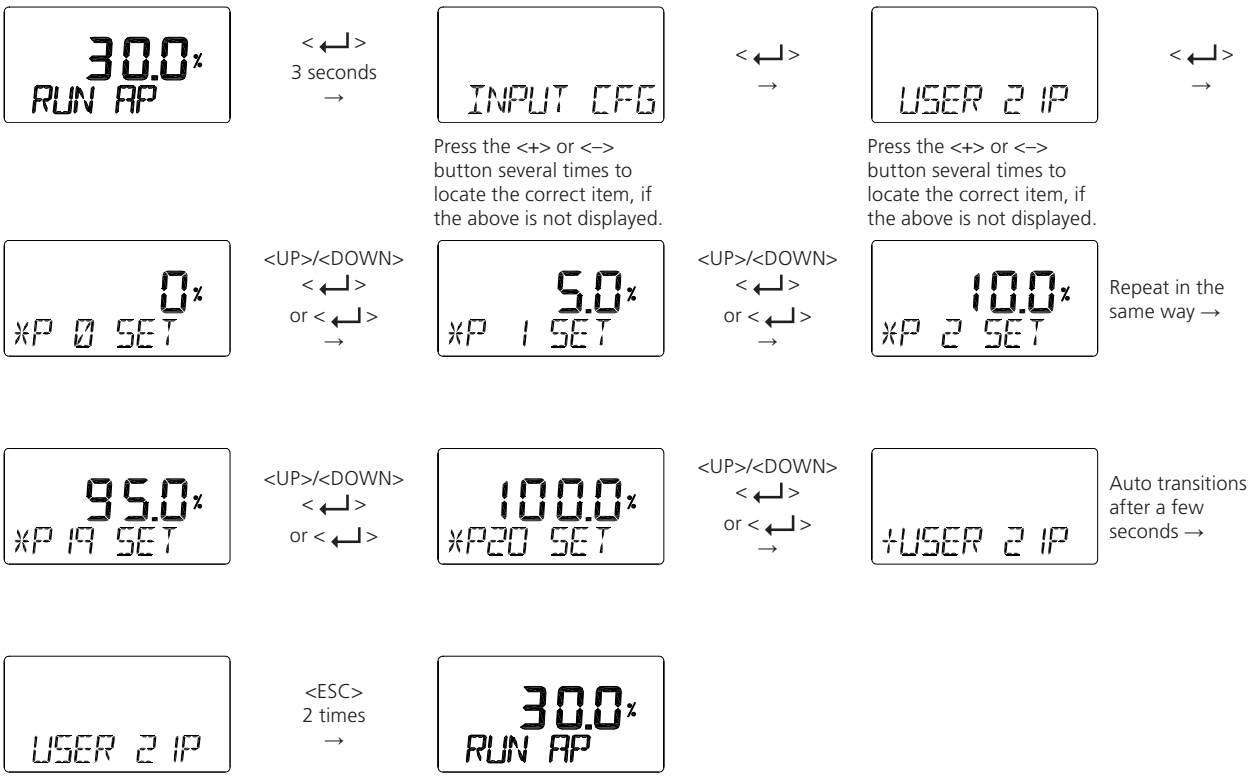

Note: This function is activated by saving the Characterisation Curves setting as "USER 21P" in Section 8.9.5, Characterisation Curves

8.9.8 Tight Shut Open (TSHUT OP)

When the input signal (SP) exceeds the value set in Tight Shut Open, the valve moves to the position where maximum supply pressure is applied. For example, with a standard input current range of 4 mA = 0% and 20 mA = 100%, if the Tight Shut Open value is set to a percentage less than 100% (e.g., 95%), and the input current exceeds this threshold, the device immediately applies full supply pressure to the actuator via Output Port 1, driving the valve to 100% stroke.

In the case of a linear single-acting direct-acting (DA) actuator – where the valve closes at 100% input current – if the input current exceeds the Tight Shut Open setting, the device forces the valve to fully close. This ensures a tight shut-off by applying maximum actuator force, helping to prevent valve leakage.

Note: If the value is set to 100%, the Tight Shut Open function will not be activated.

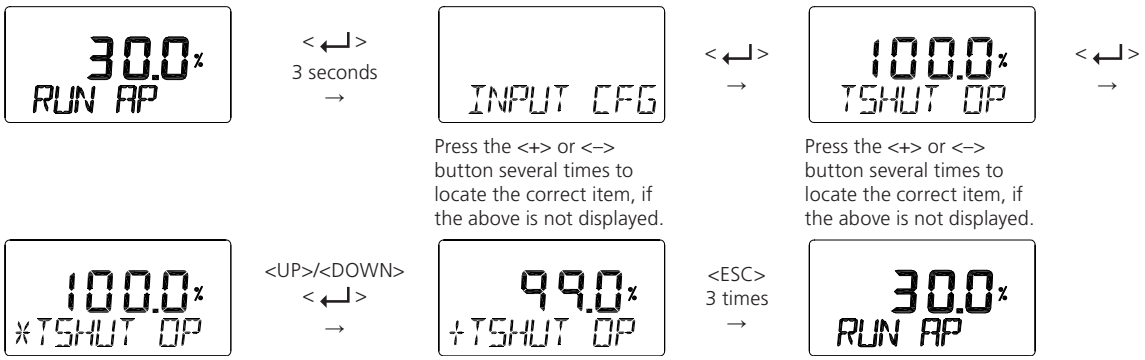

8.9.9 Tight Shut Close (TSHUT CL)

When the input signal (SP) falls below the value set in Tight Shut Close, the valve moves to the position where the actuator pressure is fully exhausted. For example, with a standard input current range of 4 mA = 0% and 20 mA = 100%, if the Tight Shut Close value is set to a percentage greater than 0% (e.g., 5%), and the input current drops below this threshold, the device immediately exhausts the actuator pressure, driving the valve to 0% stroke.

In the case of a linear double-acting reverse-acting (RA) actuator – where the valve closes at 0% input current – if the input current falls below the Tight Shut Close setting, the device forces the valve to fully close. For the double acting actuator, the supply pressure from the device is directly applied to the actuator through Output Port 2 (OUT2), while the pressure from Output Port 1 (OUT1) is fully exhausted. This allows the actuator to generate greater force, ensuring the valve is tightly closed to prevent the valve leakage.

Note: If the value is set to 0%, the Tight Shut Close function will not be activated.

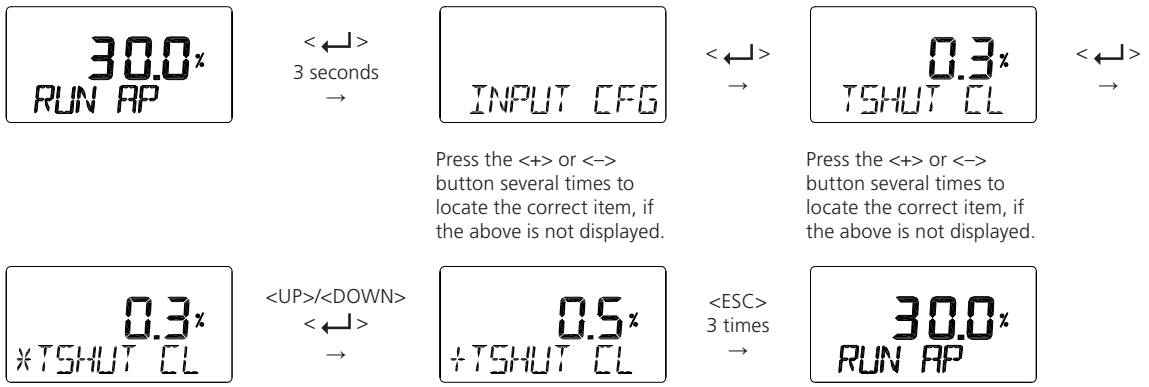

The following graph illustrates the valve movement when an input signal corresponding to either Tight Shut Open or Tight Shut Close is applied.

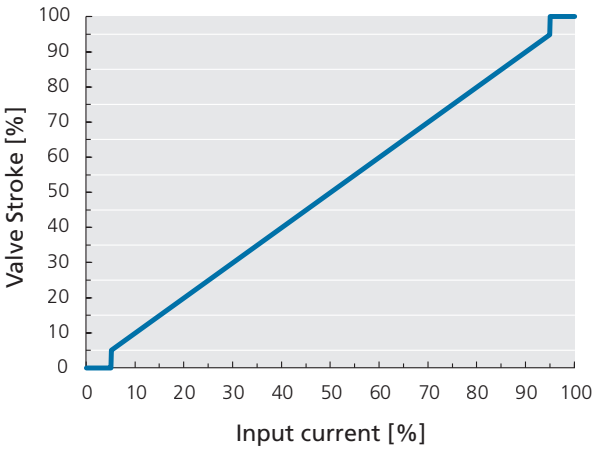

8.9.10 Target Position Ramp Up/Down Rate (RAMP UP / RAMP dN)

This function is used to limit the speed of valve movement in response to input signals, helping to prevent sudden valve actions. It is particularly useful in processes that require precise control of flow or pressure. The unit of setting is %/sec. For example, if you want the valve to move across a full stroke (100%) in approximately 5 seconds, set the rate to 100% / 5 sec = 20 %/sec. The ramp-up rate and ramp-down rate can be configured independently. If this function is turned OFF, the valve will move to the target position as quickly as possible.

Before and after TP Ramp Up/Down rate

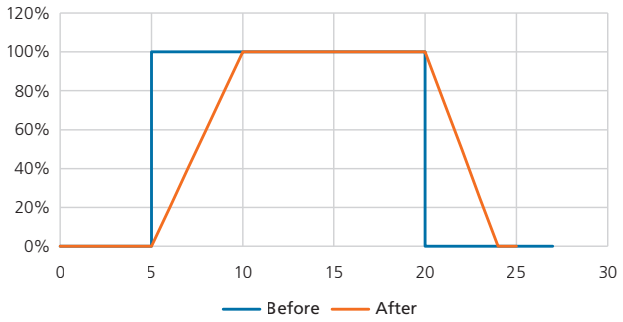

The graph below shows the target position (in red) and the actual valve position (in blue) after applying the TP Ramp Up/Down function.

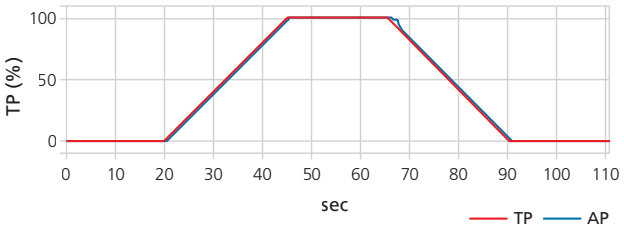

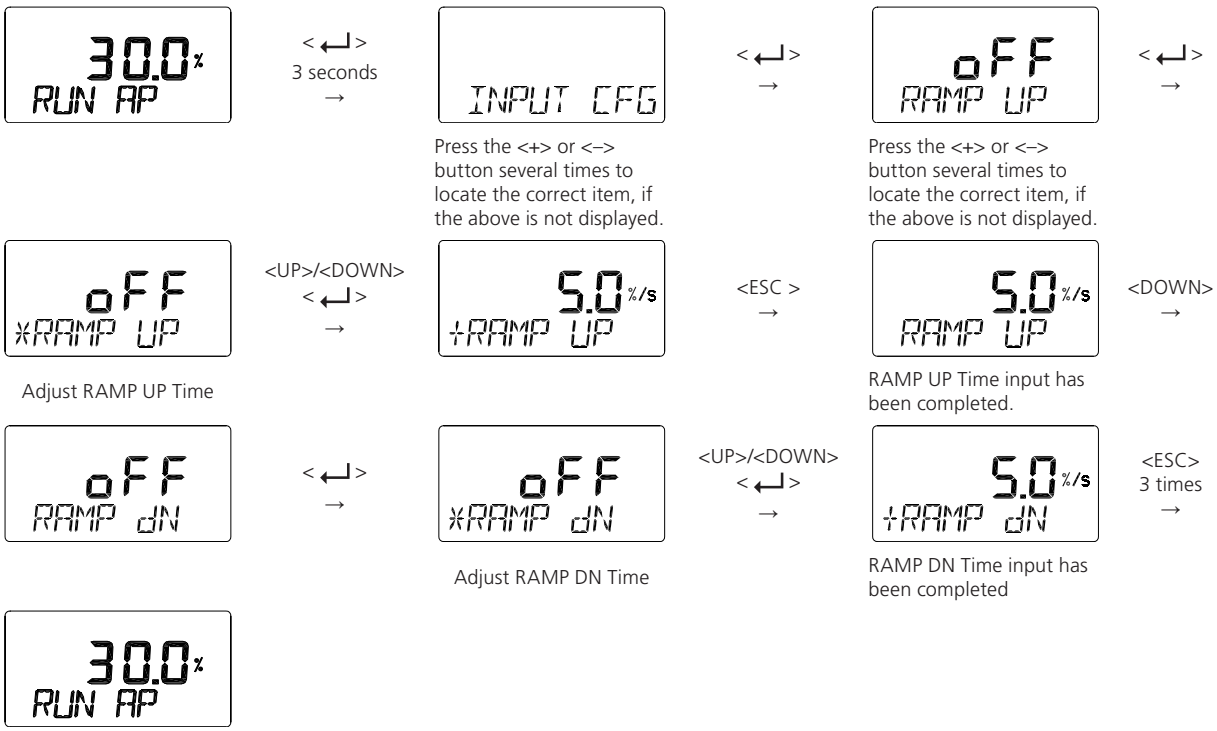

8.9.11 Discrete Switch Input Function (dIF OFF / FCL / FOP / PSTA / PSTO)

This function allows specific operations to be performed in response to signal changes at the Discrete Switch Input port.

The following functions can be configured to be triggered upon signal transitions.

Function Name	LCD Abbreviations	Functions
OFF	OFF	Performs no function.
Fully Closed Position	FCL	Moves to the fully closed position, i.e., the safe position.
Fully Open position	FOP	Moves to the fully open position.
Partial Stroke Test Start	PSTA	Initiates PST operation.
Partial stroke Test Stop	PSTO	Stops the active PST operation.

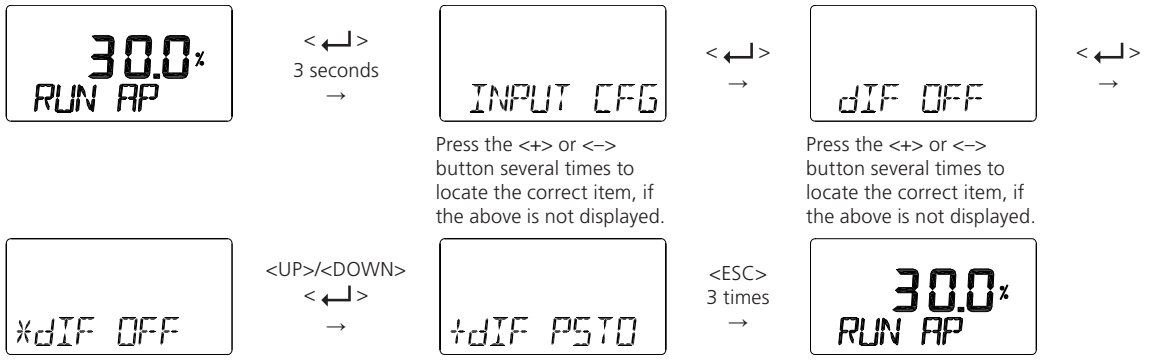

8.9.12 Discrete Switch Input Logic (dI LOGIC HI / Lo)

The activation logic for the discrete switch input can be configured to either High (HI) or Low (LO).

By default, it is set to HI at the time of factory shipment, meaning the input is activated when a voltage between 10 to 28 VDC is applied. If set to LO, the input is activated when a voltage between 0 to 5 VDC is applied, or when no voltage is present. Since an internal resistor is built in, there is no need to connect an external resistor.

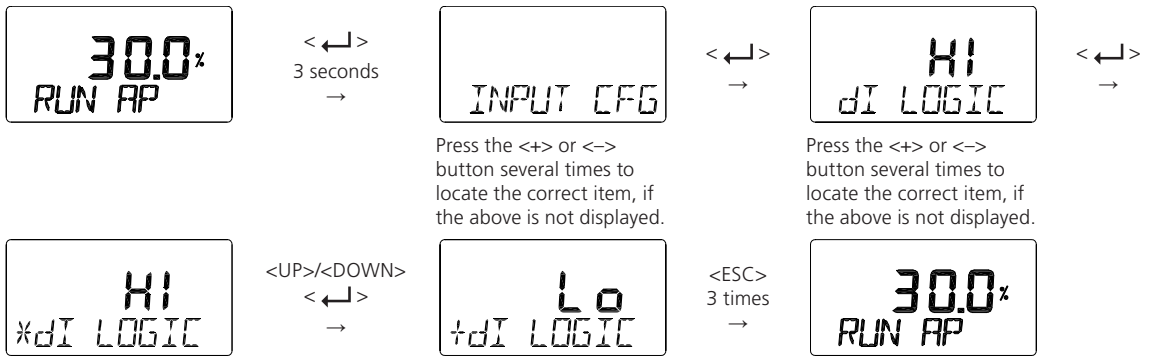

8.10 Output Configuration (OUTPUT CFG)

The following parameters can be configured in the Output Configuration menu.

1) **4-20 mA Analogue Output Direction (PTM NORM / REVS)**
2) **4-20 mA Analogue Output Zero / End (PTM ZERO / ENd)**
3) **HART Feedback Direction (HART NORM / REVS)**
4) **Discrete Switch Output 1 / 2 Activation (dO1/2 ACT oFF / on)**
5) **Discrete Switch Output Logic (dO LOGIC HI / Lo)**
6) **NE43 Analogue Output Activation (AO ACT oFF / on)**
7) **NE43 Analogue Output Logic (AO LOGIC Lo / HI)**

8.10.1 4-20mA Analogue Output Direction (PTM NORM / REVS)

The 4–20 mA analogue output can be configured to reflect the actual valve position or its inverse.

Select either NORM (normal) or REVS (reverse) to set the desired output behaviour.

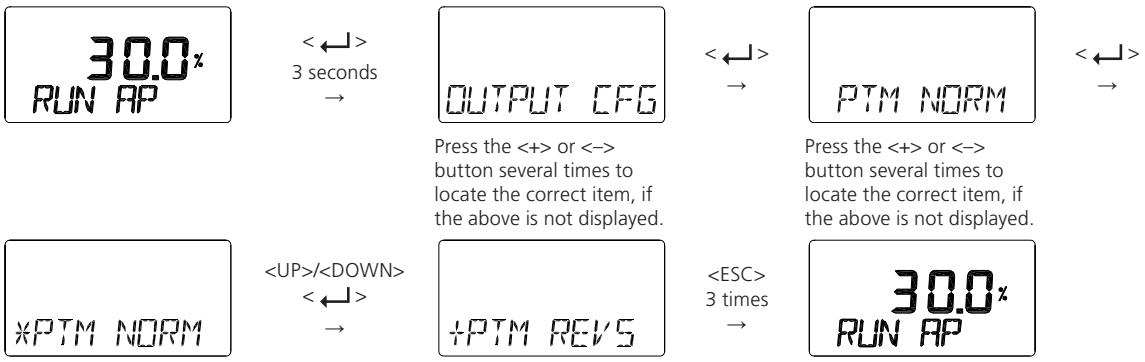

8.10.2 4-20 mA Analogue Output Zero / End (PTM ZERO / ENd)

PTM ZERO adjusts the ZERO point (4 mA output) of the 4–20 mA analogue signal, while PTM END modifies the endpoint (20 mA output).

These functions are used when the output signal needs to differ from the actual valve position, or when there is a discrepancy between the output signal and the actual valve position that requires correction or adjustment.

A measuring device, such as an current meter, is required to view the current output signal, and it must be connected as shown in the diagram below.

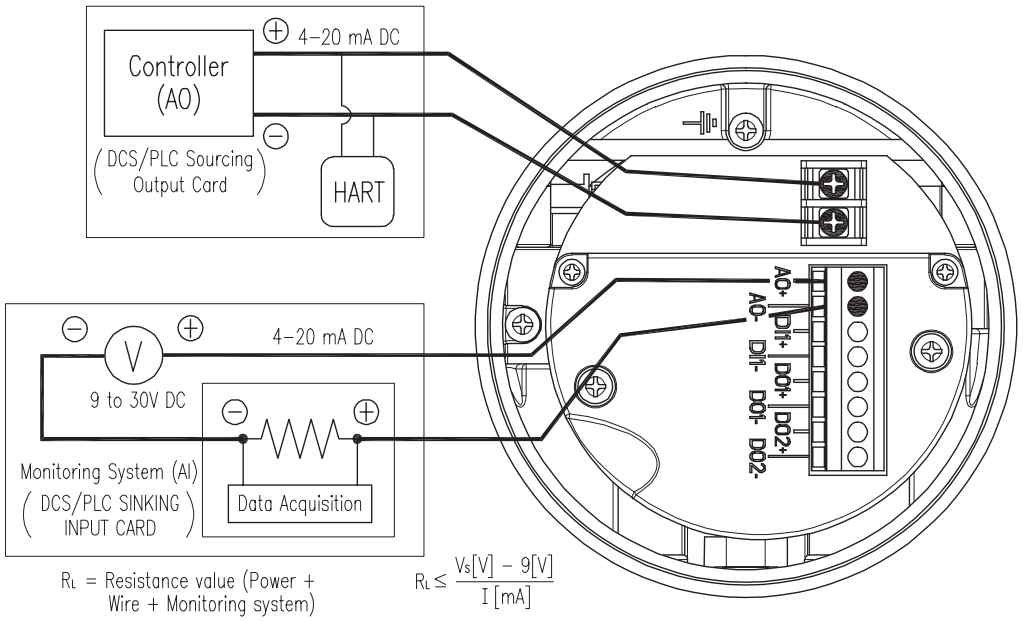

Fig 8-3: 4-20 mA Analogue Output Adjustment

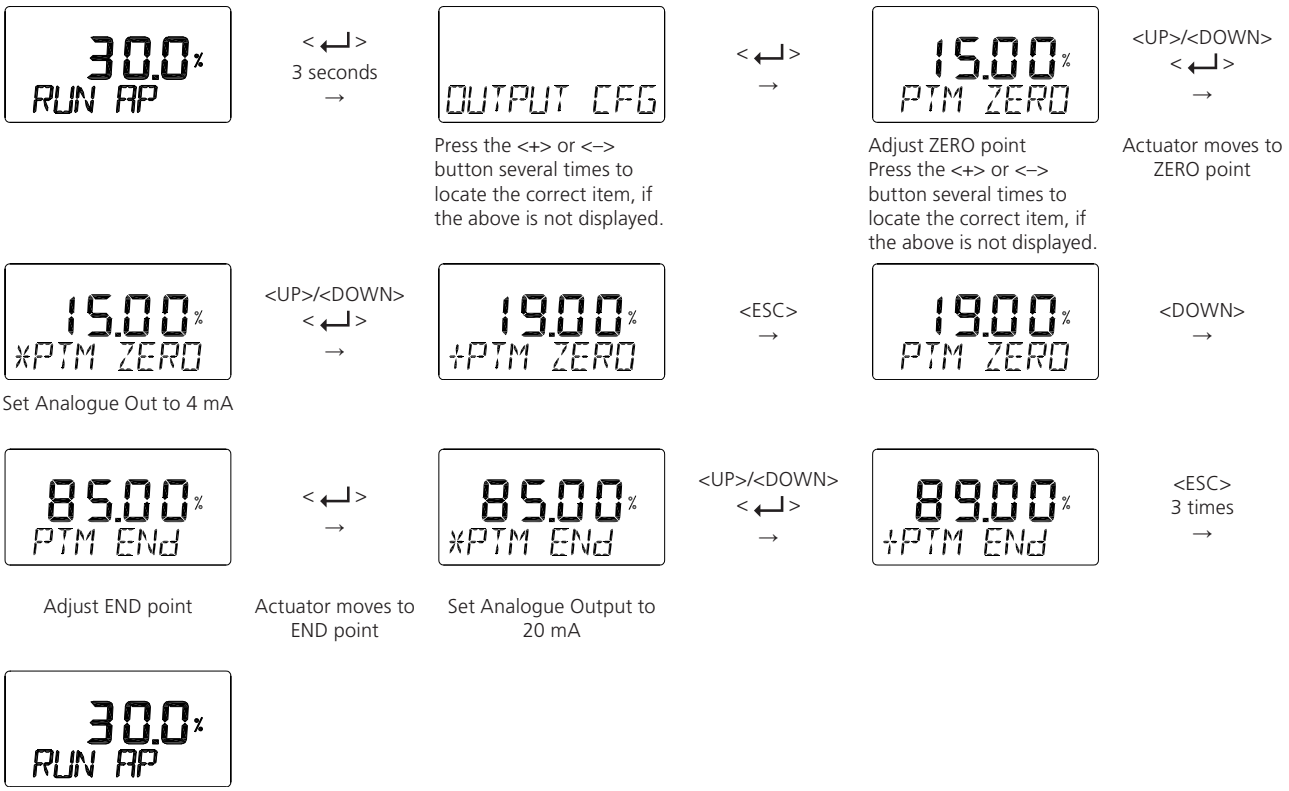

8.10.3 HART Feedback Direction (HART NORM / REVS)

The feedback signal from the HART communication output of the positioner can be configured to either match the actual valve position or operate in reverse. Select NORM for normal output or REVS for reversed output.

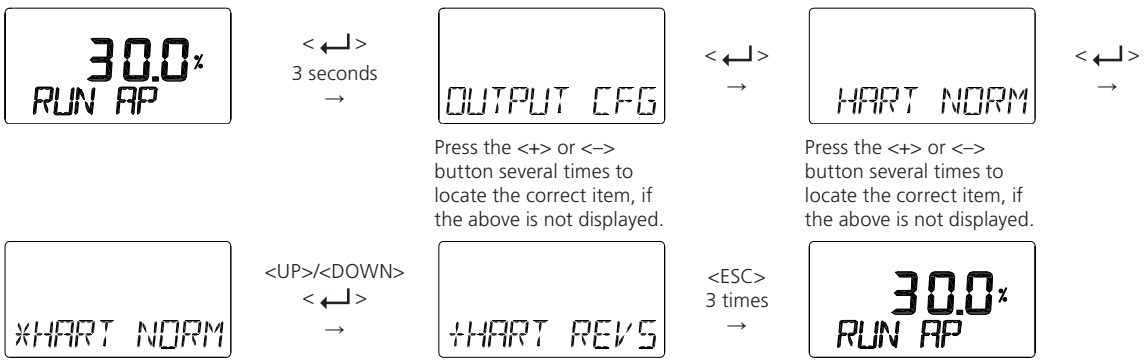

8.10.4 Discrete Switch Output 1/2 Activation (dO1/2 ACT)

This function is used to activate or deactivate the output of specific alarms and events assigned via EDD or DTM through the discrete switch output port. For detailed instructions on how to assign specific alarms and events to the discrete switch output, refer to the EDD or DTM manual.

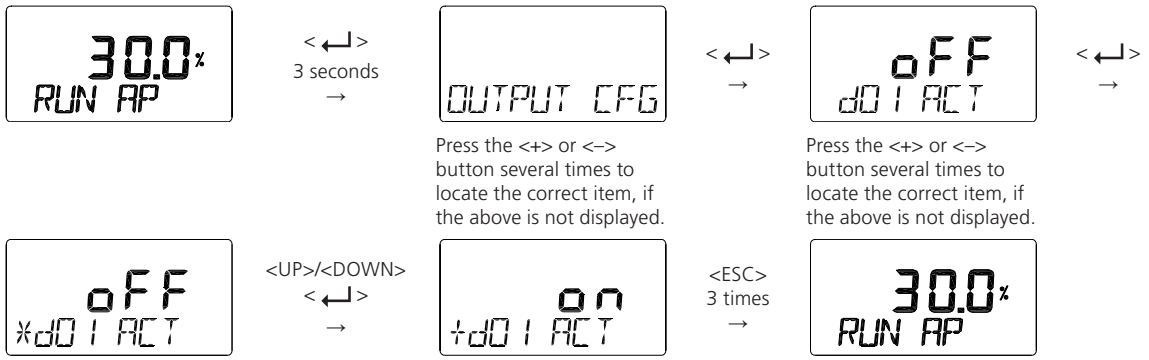

8.10.5 Discrete Switch Output Logic (dO1/2 LOGIC HI / Lo)

The logic for turning the discrete switch output on or off can be set to either High (HI) or Low (Lo). 'High' and 'Low' corresponds to 'On' and 'Off', respectively. By default, it is set to High (HI) at the time of factory shipment.

When the switch is activated and its logical state is set to HIGH, the occurrence of a specific event assigned to the switch output will turn the switch ON. Conversely, if the logical state is set to LOW, the same event will result in the switch being turned OFF.

When the switch is turned ON, the voltage drop across the switch will be less than 1 V. The maximum current rating of the switch is 1 A. Keep in mind that a load (e.g. resistor) must be connected between the switch and the power source. Direct connection of the switch to the power source without a load may result in damage to the switch.

When the switch is turned OFF, the current flowing through it will be less than 0.1 mA.

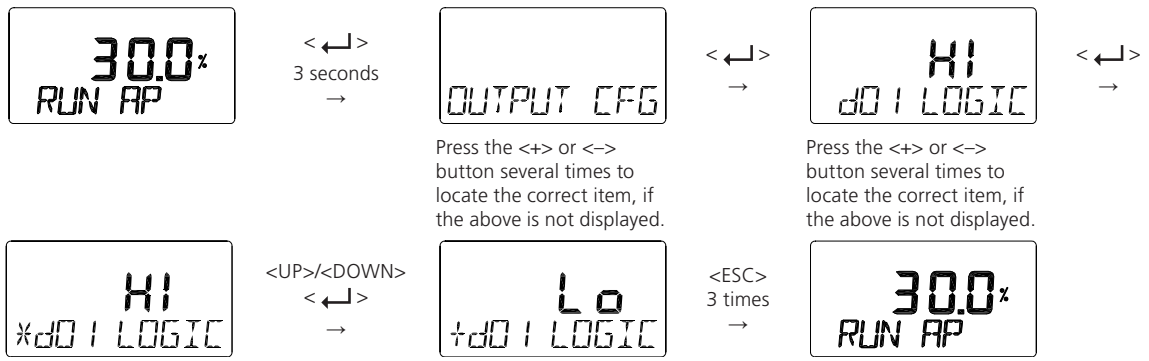

8.10.6 NE43 Analogue Output Function Activation (AO ACT oFF / on)

This function is used to activate or deactivate the output of alarms and events assigned via EDD or DTM through the analogue output port, in accordance with the NAMUR NE43 standard.

For detailed instructions on how to assign specific alarms and events to the analogue output, refer to the EDD or DTM manual.

The analogue output signal can represent alarm conditions using specific current ranges as defined by the NAMUR NE43 specification as shown below. During normal operation, the valve opening is output as a current signal between 4 and 20 mA. When an event occurs, depending on the configured logic, the output current changes to either below 3.6 mA (Analogue Output Logic Low) or above 21 mA (Analogue Output Logic High), indicating an alarm condition.

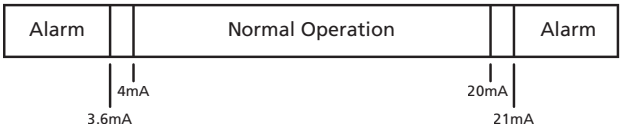

< NAMUR NE43 >

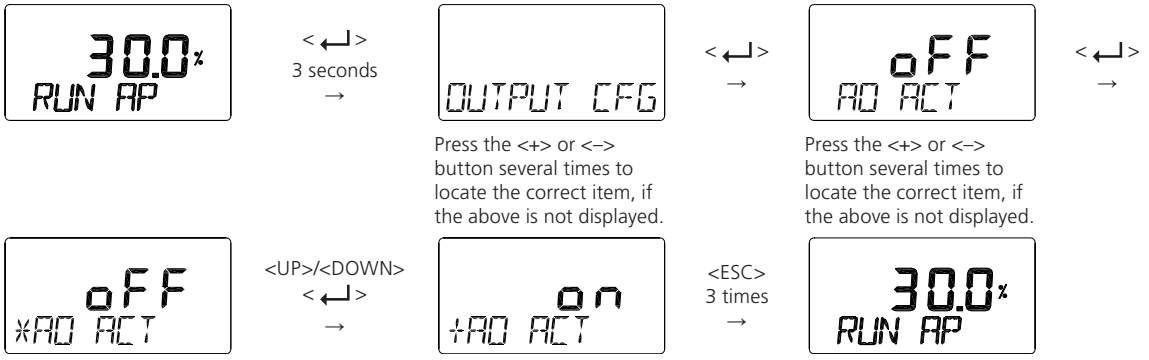

8.10.7 NE43 Analogue Output Logic (AO LOGIC Lo / HI)

This setting defines the analogue current output behaviour when an event or alarm assigned via EDD or DTM occurs.

If set to "Lo", the analogue output port will output a current of 3.6 mA or less when an event occurs.

If set to "HI", the output current will be 21.0 mA.

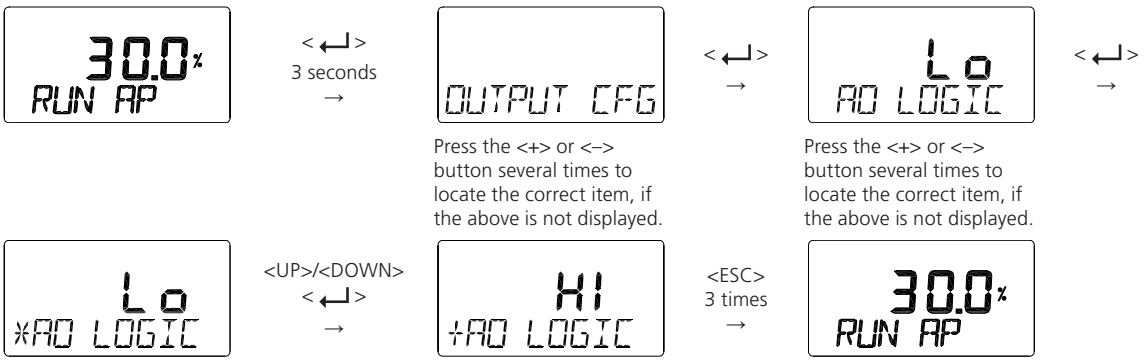

8.11 Device Configuration (dEV CFG)

The following parameters can be configured in the Device Configuration menu.

1) **Valve Action Direction, ACT REVS / dIR)**
2) **Write Protect (W UNLOCKEd / LOCKEd)**
3) **LCD View Mode (VIEW NORM / REVS)**
4) **Polling Address (POL AddR 0 - 63)**
5) **Temperature Unit (°C/°F)**
6) **Pressure Unit (bar / psi)**
7) **Factory Reset (dEFAULT oFF / on)**
8) **Self-Test (SELF TEST)**

8.11.1 Valve Action Direction (ACT REVS / dIR)

Valve Action Direction Setting (Action, ACT REVS / dIR)

When performing "AUTO 2" calibration, the valve action direction is automatically set to either reverse-acting (REVS) or direct-acting (dIR). However, this function can also be used when the user manually changes the setting to "ACT REVS" or "ACT dIR".

If the user sets the actuator direction differently from its original configuration, the following parameters will automatically switch to REVS: Signal Direction [SIG], HART Feedback Direction [HART], 4-20 mA Analogue Output Direction [PTM], and View Mode [VIEW].

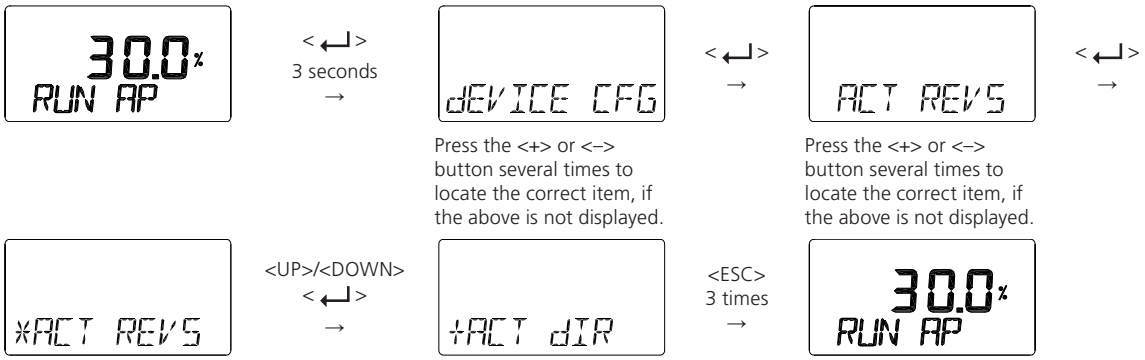

8.11.2 Write Protect (W UNLOCKEd / LOCKEd)

This function is used to lock or unlock the parameter settings stored in the device.

When locked ("LOCKEd"), parameter changes are restricted.

When unlocked ("UNLOCKEd"), parameter settings can be modified.

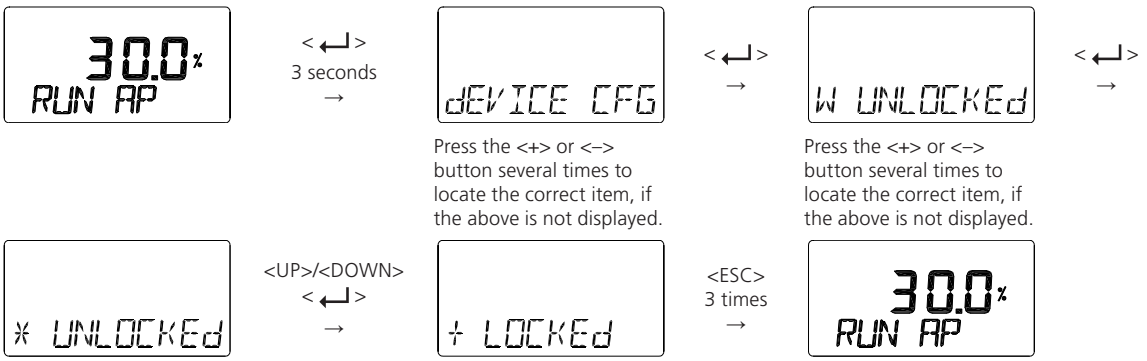

8.11.3 LCD View Mode (VIEW NORM / REVS)

This function is used to configure how the "RUN AP" value displayed on the LCD corresponds to the actual valve opening – either as the same value (NORM) or as the inverse value (REVS).

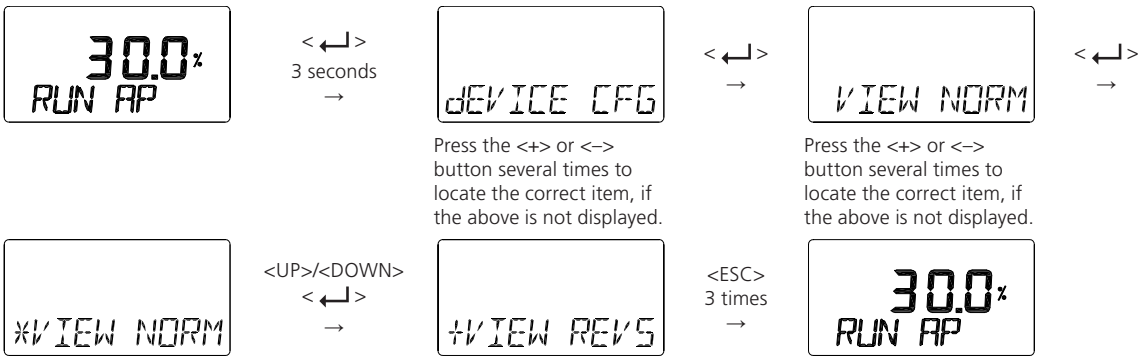

8.11.4 Polling Address (POL AddR 0-63)

This setting defines the polling address of the positioner used in HART (Highway Addressable Remote Transducer) communication.

A value between 0 and 63 can be configured, with the default set to 0.

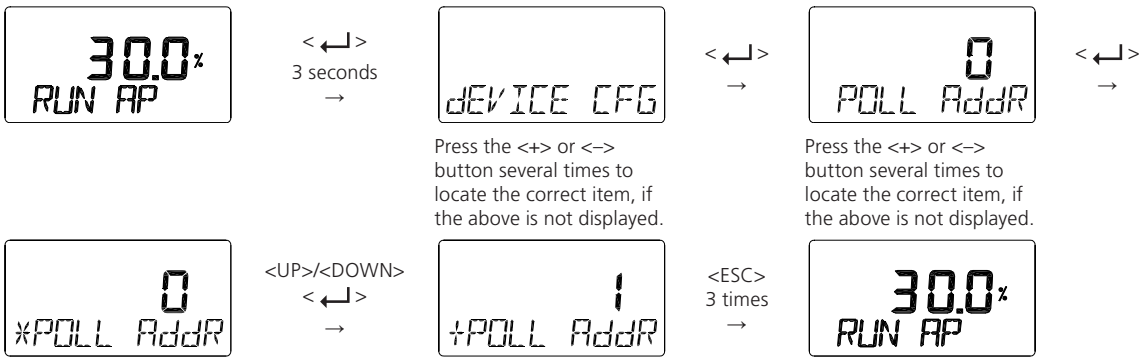

8.11.5 Temperature Unit (TEMP UNIT °C / °F)

This is used to set the temperature unit to either Celsius (°C) or Fahrenheit (°F).

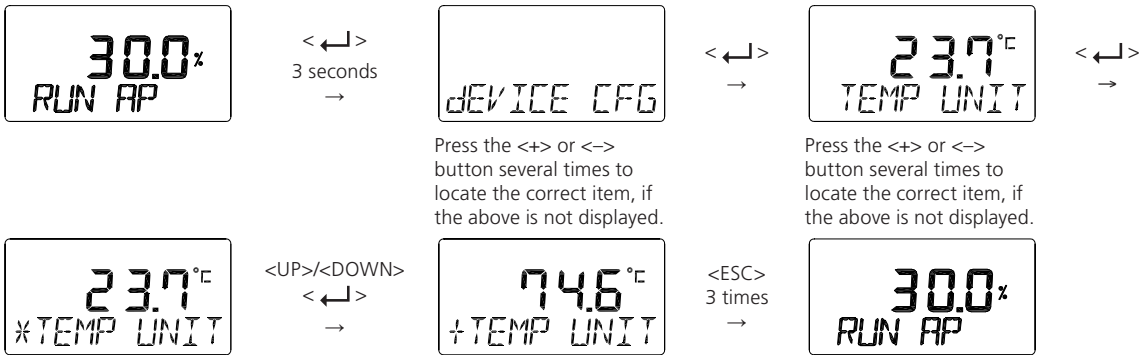

8.11.6 Pressure Unit (PRES UNIT bar/psi)

This is used to set the pressure unit to either bar or psi.
When set to psi, the unit symbol is not shown on the LCD.

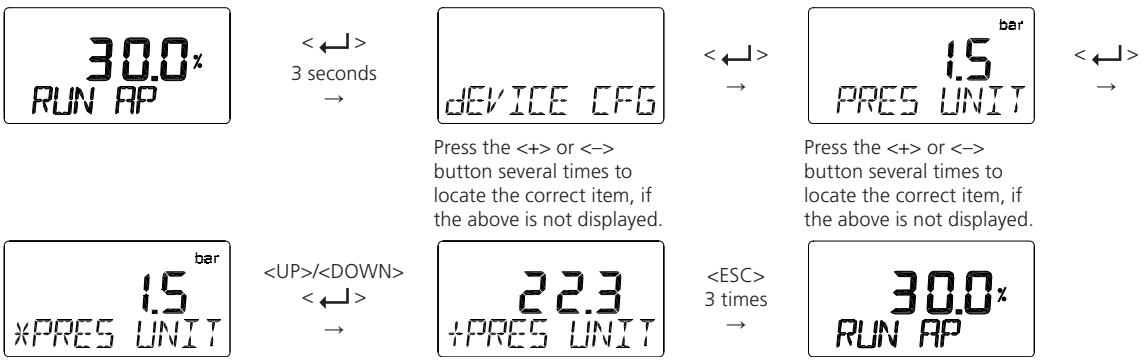

8.11.7 Factory Reset (dEFAULT oFF / on)

This function initialises all parameters stored in the device to their factory default values.

In the "DEFAULT" mode, pressing the Enter button activates the ON/OFF setting mode.

If the Enter button is pressed and held for more than 3 seconds, the setting changes from OFF to ON.

Pressing the Enter button again will reset all stored parameter values to their factory defaults.

⚠ **Use this function with caution, as it will reset all parameter values to their factory defaults.**

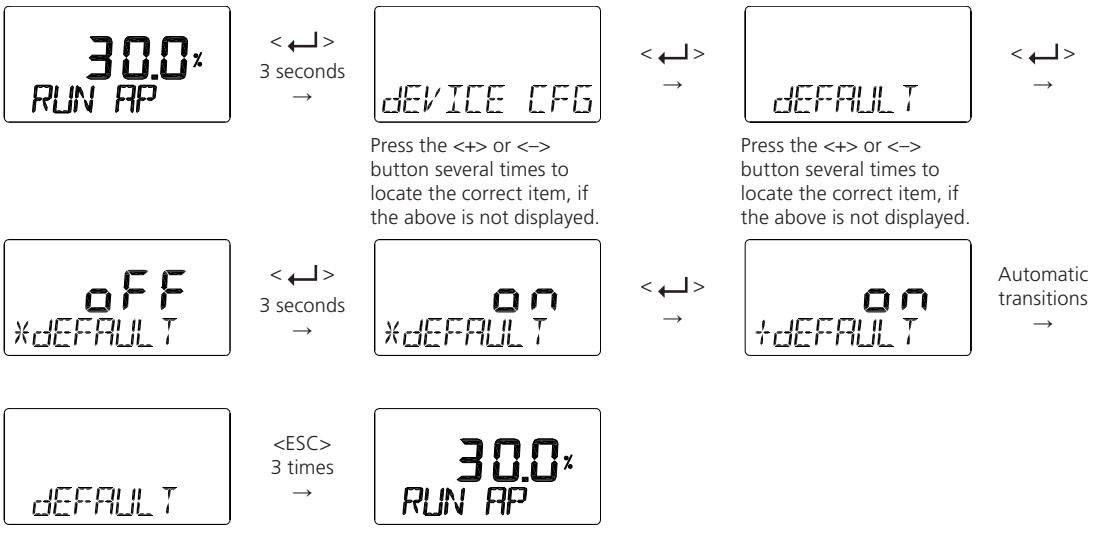

8.11.8 Self-Test (SELF TEST)

This function diagnoses the operating status of the device's internal memory (RAM and NVM). If no issues are detected during the SELF TEST, the message "FINISH" will appear, followed by the SELF TEST menu.

If an error is detected, the message "SEt / NVMW" will be displayed, as shown in the figure below.

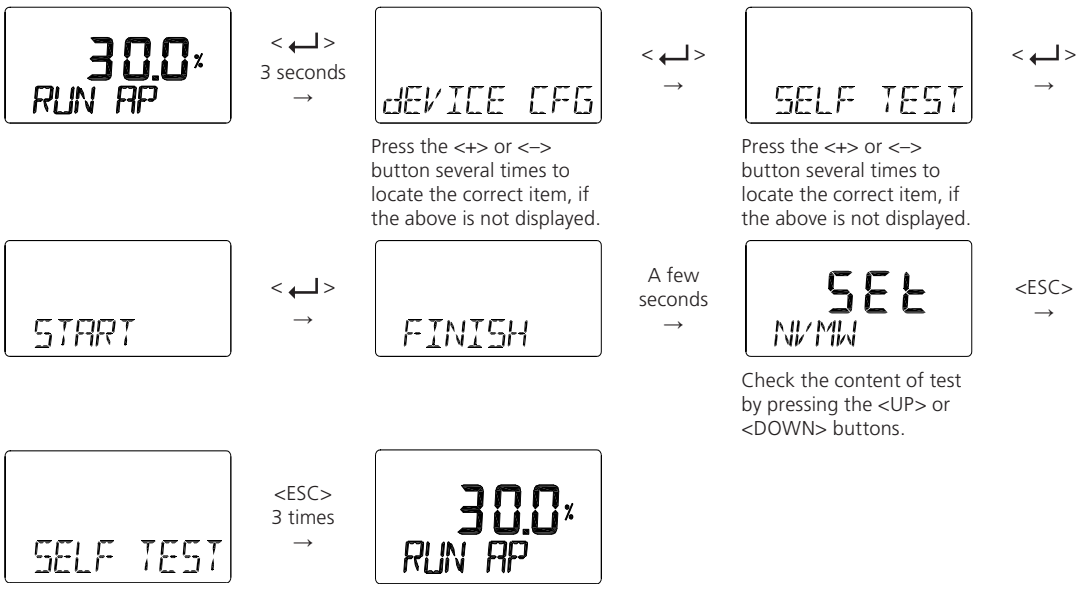

Note. Diagnostics Message



If the upper display shows "SEt," it indicates that an event has occurred. If it shows "CLr," it means the event message has been cleared. The lower display "NVMW" indicates the alarm that has occurred. For details about the alarm, *refer to Section 8.15, Status and Alarm Codes.*

8.12 Diagnosis (dIAGNO)

The following parameters can be configured in the Diagnosis menu.

1) Factory Default Status/Alarm Settings

2) Process Status (PS)

3) Device Status (dS)

4) View Monitoring Counts (VI CNTS)

5) Reset Alarm Status (RST ALRM)

6) View Event Log (EVT LOG)

8.12.1 Factory Default Status/Alarm Settings

The table below shows the default values set at the factory for the device status or process status. In other words, it distinguishes between alarms that are enabled to automatically trigger when specific events occur and those that are disabled.

Each status or alarm is categorised according to the NE107 signal classification:

- Failure
- Out of Specification
- Maintenance Required
- Functional Check

When a specific alarm occurs, the corresponding NE107 signal is displayed. These classifications can be reconfigured by the user as needed.

As shown in the table below, alarms or statuses that can be manually reset are as follows:

- Auto Calibration Running
- Diagnosis Running
- Critical NVM Fail
- Non-Critical NVM Fail
- PST Fail
- Auto Calibration Fail

Alarm activation and NE107 classification settings can be configured via HART communication. Additionally, the following five specific alarms can be enabled directly using the LCD screen and buttons.

- Travel High Limit
- Travel Low Limit
- Temperature High Limit
- Temperature Low Limit
- Deviation Timeout

Status/Alarm Name	Factory Default Setting	NE107 Signal Set at Factory Default	Manual Alarm Reset
Out of Service	Enable	Check Function	No
Auto Calibration in Progress	Enable	Check Function	Yes
PST in Progress	Enable	Check Function	No
Diagnostics in Progress	Enable	Check Function	Yes
Position Sensor High Limit	Disable	Out of Specification	No
Position Sensor Low Limit	Disable	Out of Specification	No
Critical NVM Failure	Enable	Failure	Yes
Non Critical NVM Failure	Disable	Failure	Yes
Cycle Count Limit Exceeded	Disable	Maintenance Required	No
Total Strokes Limit Exceeded	Disable	Maintenance Required	No
I/P Operation Count Limit Exceeded	Disable	Maintenance Required	No
Temperature High Alarm	Disable	Out of Specification	No
Temperature Low Alarm	Disable	Out of Specification	No
Travel High Alarm	Disable	Out of Specification	No
Travel Low Alarm	Disable	Out of Specification	No
Deviation Timeout	Enable	Out of Specification	No
PST Failure	Enable	Failure	Yes
Temperature Sensor Failure	Disable	Failure	No
Position Sensor Failure	Enable	Failure	No
Abnormal Drive Signal Alarm	Disable	Out of Specification	No
Abnormal Drive Current Alarm	Disable	Out of Specification	No
I Value High Alarm	Disable	Out of Specification	No
I Value Low Alarm	Disable	Out of Specification	No

Status/Alarm Name	Factory Default Setting	NE107 Signal Set at Factory Default	Manual Alarm Reset
Tight Shut off High Alarm	Disable	Out of Specification	No
Tight Shut off Low Alarm	Disable	Out of Specification	No
Supply Air Pressure High Alarm	Disable	Out of Specification	No
Supply Air Pressure Low Alarm	Disable	Out of Specification	No
Not Calibrated	Disable	Maintenance Required	No
Auto Calibration Failure	Enable	Maintenance Required	Yes
Zero Point Drift	Disable	Maintenance Required	No
End Point Drift	Disable	Maintenance Required	No
Stack Overflow	Enable	Failure	No
Communication Error Limit Exceeded	Disable	Out of Specification	No
Full Close Count Limit Exceeded	Disable	Maintenance Required	No
Full Open Count Limit Exceeded	Disable	Maintenance Required	No
Loop Current High Alarm	Disable	Out of Specification	No
Loop Current Low Alarm	Enable	Failure	No
DI Status	Disable	Not defined	No
DO1 Status	Disable	Not defined	No
Diagnostics Failure	Disable	Failure	No
DO2 Status	Disable	Not defined	No
Fail Safe Mode Activated	Disable	Not defined	No
Loop Current Sensor Failure	Disable	Failure	No
I/P Converter Failure	Disable	Failure	No
I/P Pressure Sensor Failure	Disable	Failure	No
Output 1 Pressure Sensor Failure	Disable	Failure	No
Output 2 Pressure Sensor Failure	Disable	Failure	No
Supply Pressure Sensor Failure	Disable	Failure	No
Leakage in Output 1 line	Disable	Maintenance Required	No
Leakage in Output 2 line	Disable	Maintenance Required	No
Friction High Alarm	Disable	Maintenance Required	No
Friction High Warning	Disable	Maintenance Required	No
Friction Low Warning	Disable	Maintenance Required	No
Friction Low Alarm	Disable	Maintenance Required	No
Break To Opening Pressure High	Disable	Maintenance Required	No

8.12.2 Process Status (PS)

The current process status is displayed as either 'GOOd' or represented by NE107 symbols and alarm abbreviations.

NE107 symbols	Abbreviation	Function
Blank	PS GOOd	Normal
	PS FAIL	Failure
	PS FUNC	Functional Check
	PS OUTS	Out of Specification
	PS MNTR	Maintenance Required

Each alarm generated by a process is assigned to one of the four NE107 signals at the time of shipment. Users can reassign these preconfigured signals as needed. Reassignment of NE107 signals for process alarms must be performed via HART communication.

The table below shows the names and abbreviations of the process status/alarms. For detailed descriptions of each alarm, *refer to Section 8.15, Status and Alarm Codes.*

Process Status/Alarm Name	Abbreviation
Cycle Count Limit Exceeded	CYCC
Total Strokes Limit Exceeded	TVLA
I/P Operation Count Limit Exceeded	OPRC
Temperature High Alarm	TMPH
Temperature Low Alarm	TMPL
Travel High Alarm	TVLH
Travel Low Alarm	TVLL
Deviation Timeout	dVTO
Tight Shut off High Alarm	TVCH
Tight Shut off Low Alarm	TVCL
Supply Air Pressure High Alarm	SUPH
Supply Air Pressure Low Alarm	SUPL
Zero Point Drift	ZPDR
End Point Drift	EPDR
Full Close Count Limit Exceeded	FCLC
Full Open Count Limit Exceeded	FOPC
Loop Current High Alarm	LPCH
Loop Current Low Alarm	LPCL
Leakage in Output 1 line	LEO1
Leakage in Output 2 line	LEO2
Friction High Alarm	FRHA
Friction High Warning	FRHW
Friction Low Warning	FRLW
Friction Low Alarm	FRLA
Break To Opening Pressure High Limit	BTOH

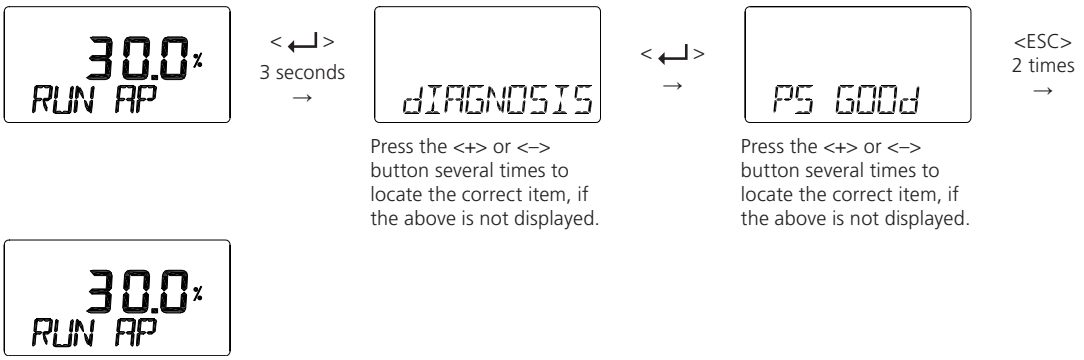

8.12.3 Device Status (dS)

The current device status is displayed as either 'GOOd' or represented by NE107 symbols and alarm abbreviations.

NE107 symbols	Abbreviations	Function
Blank	dS GOOd	Normal
	dS FAIL	Failure
	dS FUNC	Functional Check
	dS OUTS	Out of Specification
	dS MNTR	Maintenance Required

Each alarm generated by the positioner is assigned to one of the four NE107 signals at the time of shipment. Users can reassign these preconfigured signals as needed. Reassignment of NE107 signals for positioner alarms must be performed via HART communication.

The table below shows the names and abbreviations of the positioner status/alarms. For detailed descriptions of each alarm, *refer to Section 8.15, Status and Alarm Codes*.

Device Status/Alarm Name	Abbreviation
Out of Service	OOSV
Auto Calibration in Progress	CALR
PST in Progress	PSTR
Diagnostics in Progress	dIGR
Position Sensor High Limit	PSNH
Position Sensor Low Limit	PSNL
Critical NVM Failure	NVMF
Non-Critical NVM Failure	NVMW
PST Failure	PSTF
Temperature Sensor Failure	TSNF
Position Sensor Failure	PSNF
Abnormal Drive Signal	AbdS
I Value High Alarm	IVLH
I Value Low Alarm	IVLL
Not Calibrated	NCAL
Auto Calibration Failure	CALF
Communication Error Limit	COMM
Diagnostics Failure	dIGF
Loop Current Sensor Failure	LCSF
I/P Converter Failure	IPCF
I/P Pressure Sensor Failure	IPSF
Output 1 Pressure Sensor Failure	AS1F
Output 2 Pressure Sensor Failure	AS2F
Supply Pressure Sensor Failure	SPSF

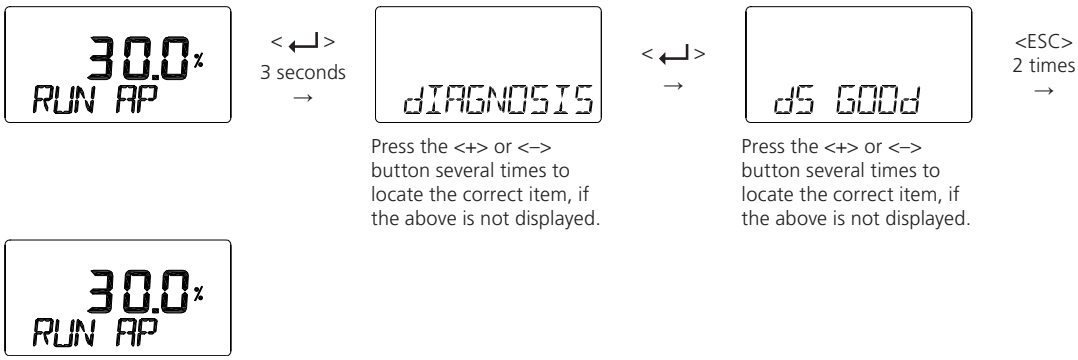

8.12.4 View Monitoring Counts (VI CNTS)

This function allows users to view accumulated data related to valve movement.

Counter Name	Symbol [unit]	Function
Cycle Count	CYCLE CNT	Accumulates the number of times the valve changes direction. It is incremented only when the valve changes direction beyond the Cycle Count Deadband from the current position.
Total Valve Strokes	STROKES	Accumulates the total distance the valve has moved. It is incremented by 1 each time the valve moves a distance equal to one stroke beyond the Deadband from the current position.
Operating Count	OPER CNT	Accumulates the number of operations of the I/P converter when the actual position (AP) reaches the target position (TP).
Fully Open Count	F CNT	Cumulates the number of times the valve has fully opened.
Fully Closed Count	FCL CNT	Cumulates the number of times the valve has fully closed.

The five counters listed in the table above are continuously compared against their predefined upper limits. When the accumulated counter value exceeds its corresponding limit, an alarm is triggered. Alarm enable/disable settings for each alarm can be configured via HART communication using either EDD or DTM.

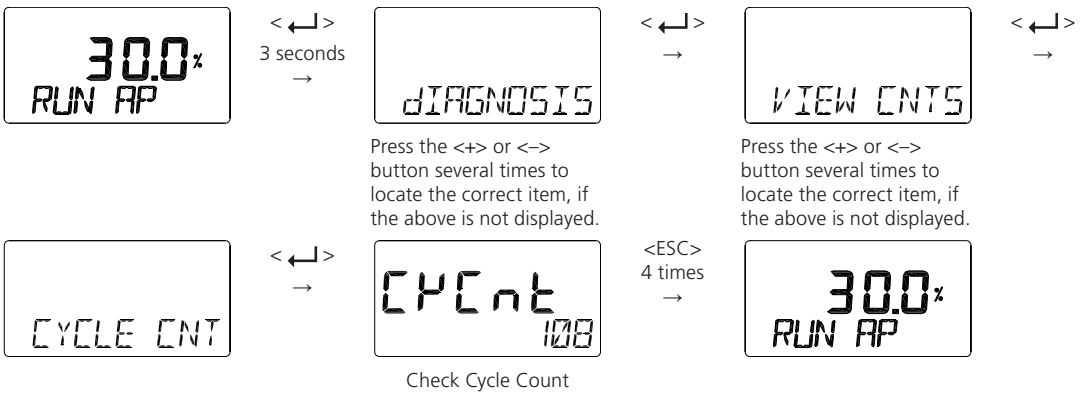

8.12.5 Reset Alarm Status (RST ALRM oFF / on)

Most alarms are automatically cleared when their causes are resolved. For example, if an alarm is triggered due to high temperature, it will be automatically cleared once the temperature drops below the high limit. However, in cases such as a failed Partial Stroke Test or failed auto-calibration, the alarm must be cleared manually using this function.

The following alarms can be cleared using the alarm reset function.

1) Auto Calibration in progress
2) Diagnostics in progress
3) Critical NVM Failure
4) Non-Critical NVM Failure
5) PST Failure
6) Auto Calibration Failure

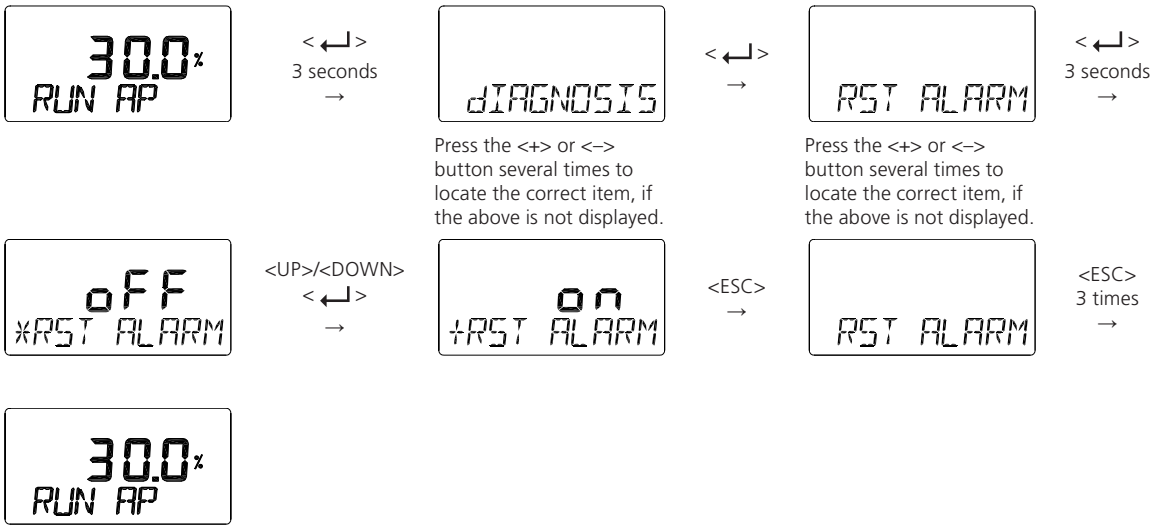

8.12.6 View Event Log (EVT LOG)

Up to the 20 most recent events that occurred during operation are displayed. Among these, Record 0 represents the most recent event, while Record 19 indicates the oldest. Each event includes the time it occurred (EVT TIME) and a description of the event (EVT INFO). For detailed information on event abbreviations and descriptions, *refer to Section 8.15, Status and Alarm Codes*.

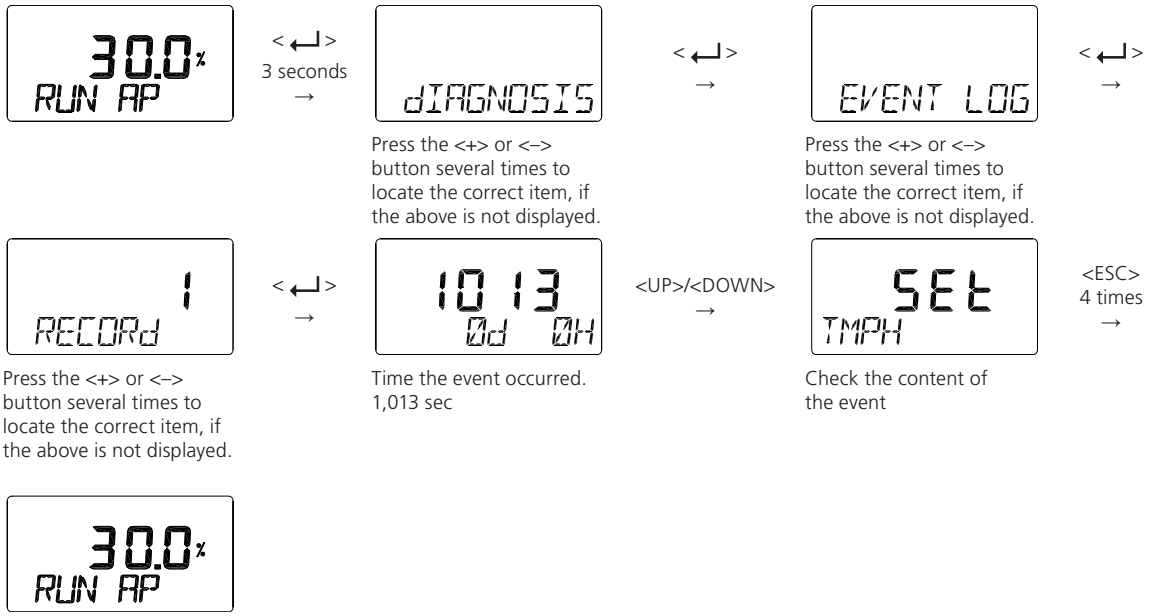

Note. Event Message



If the value displayed at the top of the screen is 'Set', it indicates that an event has occurred. If it is 'Clr', it means the event message has been cleared. At the bottom, 'TMPH' represents the alarm abbreviation."

8.13 Device Information (INFO)

The INFO menu provides various information related to the device.

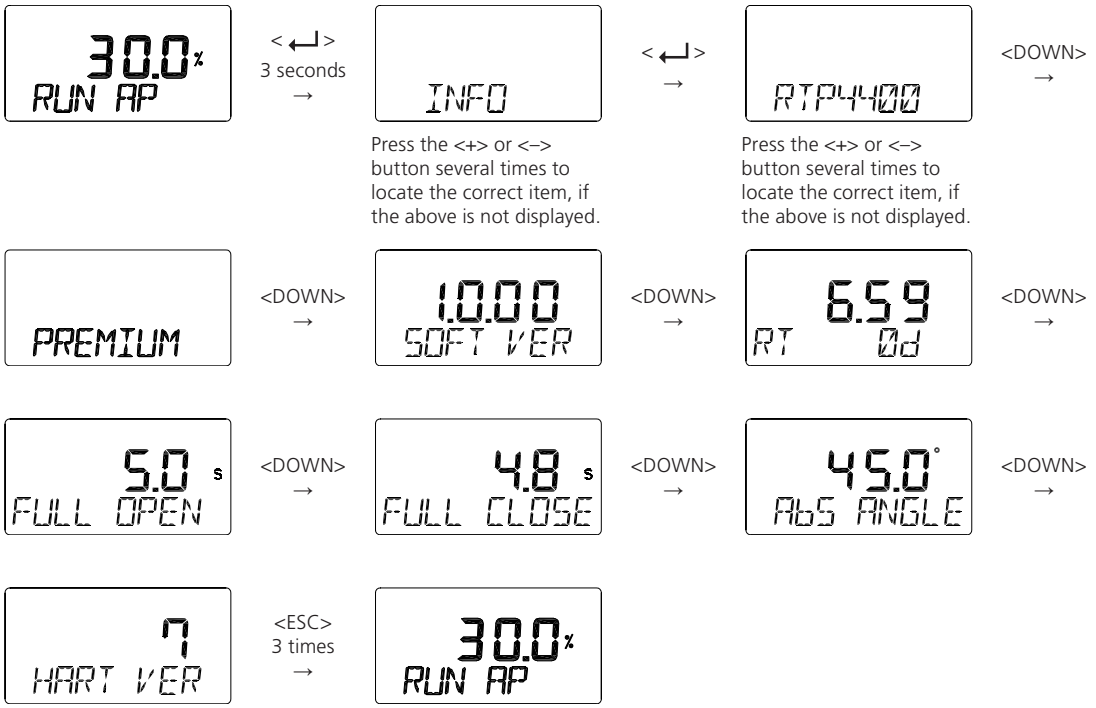

LCD Display	Description
RTP4400	Model Name
Advanced / Premium	**Advanced** Advanced diagnostic level provides enhanced valve diagnostic functions on the DTM, including dashboard, alarm information, auto calibration, alarm log, commissioning and offline test capabilities (Valve Signature Test, Partial Stroke Test, Step Response Test). **Premium** Premium diagnostic level includes all Advanced Diagnostics features and adds online diagnostics such as Monitoring, Counters, Histogram, Trends on the DTM.
1.0.00 SOFT VER / 2025AUG30	Software Version: "1.0.00" Downloaded Software Input Date: "August 30, 2025" (January: JAN, February FEB, March: MAR, April: APR, May: MAY, June: JUN, July: JUL, August: AUG, September: SEP, October: OCT, November: NOV, December: DEC) In the SOFT VER status screen, pressing the < ↵ > button displays the date and then pressing the < ↵ > button again returns to the SOFT VER display.
4.18 RT 0d	RT(Run Time) Indicates the total operating time of the device. "4.18" → Represents 4 hours and 18 minutes. "0d" → Indicates the number of operating days. Time recording interval is 1 hour.
3.12 FULL OP	Upward Full Stroke Time [FULL OP] This value is automatically stored after executing AUTO 2 / 3, and represents the time (in seconds) it takes for the valve to move from fully closed to fully open.
2.97 FULL CL	Downward Full Stroke Time [FULL CL] This value is automatically stored after executing AUTO 2 / 3, and represents the time (in seconds) it takes for the valve to move from fully open to fully closed.
PSNT NCS	Position Sensor Type [PSNT] Potentiometer [PTN] Non-Contact Sensor [NCS]
AbS ANGL	Absolute Position in Angle [ABS ANGL]
HART VER	HART Protocol Revision [HART VER]

8.14 Error Codes Displayed During Auto Calibration

If an abnormality occurs during auto calibration, an error code will be displayed.

- This may happen when the positioner becomes uncontrollable, malfunctions, or loses accuracy.
- In the event of an error, auto calibration is aborted and the corresponding error message is immediately shown on the LCD screen.

Error Codes		Error Details and Cause	Recommended Action
	-7	If the valve does not move even when the positioner sends a Full Open signal during auto-calibration:	Verify that pneumatic supply to the positioner is normal.
	-9	If the valve does not move even when the positioner sends a Full Close signal during auto-calibration:	
	-12	If oscillation occurs during the stabilisation phase of SCAN 1 in auto-calibration:	Check for any leakage in the positioner's output port or associated pneumatic lines.
CHK IP	-10	If there is no response from the I/P converter:	Please contact your supplier or Rotork YTC.
CHK LINK	-8	If the stroke or rotational angle used is excessively small:	For linear actuators, check that the range of stroke used is not too small. For rotary actuators, check that the range of rotation angle used is not too narrow.

8.15 Status and Alarm Codes

When identifying changes in device or process status, alarm occurrences, or event logs during operation, read the status and alarm codes displayed on the LCD screen.

Then, refer to the table below to determine the appropriate corrective action based on the identified code.

Alarm Code	Abbreviation	Status/Alarm Name	Description / Recommended Action
0	OOSV	Out of Service	The position sensor is out of its operating range. If this issue occurs during use, check the installation condition.
1	CALR	Auto Calibration in Progress	Auto-calibration is in progress.
2	PSTR	PST in Progress	Partial Stroke Test is in progress.
3	DIGR	Diagnostics in Progress	Diagnostic tests (Step Response Test, Stroke Time Test, Trace Test) are in progress.
4	PSNH	Position Sensor High Alarm	The position sensor is out of its operating range. If this issue occurs during use, check the installation condition.
5	PSNL	Position Sensor Low Alarm	
6	NVMF	Critical NVM Failure	A problem has occurred in the non-volatile memory of the main board. Initialise the product using the Default function, then run AUTO 2 calibration. If the same issue persists after AUTO 2 calibration, contact your supplier to replace the main PCBA.
7	NVMW	Non-Critical NVM Failure	
8	CYCC	Cycle Count Limit Exceeded	The accumulated value of the cycle counter has exceeded the preset upper limit: Inspect the valve for any abnormalities and assess whether replacement is necessary.
9	TVLA	Total Strokes Limit Exceeded	The accumulated value of valve travel has exceeded the preset upper limit: Inspect the valve for any abnormalities and determine whether replacement is necessary.
10	OPRC	I/P Operation Count Limit Exceeded	The number of operations of the internal I/P converter in the positioner has exceeded the preset limit: Evaluate whether the I/P converter needs to be replaced.
11	TMPH	Temperature High Alarm	The internal temperature of the positioner has exceeded the preset upper limit. If the actual temperature exceeds the maximum allowable temperature of the product, continued use without lowering the ambient temperature around the positioner may degrade its performance.
12	TMPL	Temperature Low Alarm	The internal temperature of the positioner is below the preset lower limit. If the actual temperature is lower than the minimum allowable temperature of the product, continued use without raising the ambient temperature around the positioner may degrade its performance.
13	TVLH	Travel High Alarm	The valve position has exceeded the preset upper limit.
14	TVLL	Travel Low Alarm	The valve position has fallen below the preset lower limit.
15	dVTO	Deviation Time Out	The deviation between the target position and the actual position has continuously persisted for the preset deviation time while exceeding the preset deviation range. Verify whether the preset values are appropriate. Check for potential issues such as valve/actuator friction, pneumatic leakage, or insufficient supply pressure.
16	PSTF	PST Failure	Partial Stroke Test has failed. Check the PST result code and eliminate the cause of the failure.
17	TSNF	Temperature Sensor Failure	A problem has occurred with the internal temperature sensor of the positioner. Contact your supplier or replace the main PCBA.
18	PSNF	Position Sensor Failure	A problem has occurred with the internal position feedback sensor of the positioner. Reinstall the main PCBA or contact your supplier.
19	ABdS	Abnormal Drive Signal	There may be a problem with the I/P converter. Contact your supplier or replace the I/P converter.

Alarm Code	Abbreviation	Status/Alarm Name	Description / Recommended Action
21	IVLH	Integral Value High Alarm	The integrator output is operating beyond the upper limit. This may occur when the friction of the valve or actuator is excessively high
22	IVLL	Integral Value Low Alarm	The integrator output is operating below the lower limit. This may occur when the friction of the valve or actuator is excessively high.
23	TVCH	Travel Shutoff High	It is active when the travel exceeds the available high stroke of the valve/ actuator. The available stroke is already set during auto calibration. The event is not created when Tight Shut Open is used. Aging of the valve / actuator assembly or problem in the positioner sensor.
24	TVCL	Travel Shutoff Low	It is active when the travel is below the available low stroke of the valve/ actuator. The available stroke is already set during auto calibration process. The event is not created when Tight Shut Close is used. Aging of the valve / actuator assembly or problem in the positioner sensor.
26	SUPH	Supply Pressure High Alarm	This occurs when the supply pressure exceeds the preset upper limit. Check either the supply pressure or adjust the preset upper limit. Then reset it to the appropriate level.
27	SUPL	Supply Pressure Low Alarm	This occurs when the supply pressure falls below the preset lower limit. Check either the supply pressure or adjust the preset lower limit. Then reset it to the appropriate level.
28	NCAL	Not Calibrated	Auto calibration has not been performed after installation. Check the installation status and run Auto Calibration 2.
29	CALF	Auto Calibration Failure	Auto Calibration has failed. Inspect the installation for issues such as pneumatic leakage or incorrect lever position, then try again.
30	ZPdR	Zero Point Drift	The zero or end position has deviated from the preset value. The valve seat may be worn or damaged.
31	EPdR	End Point Drift	
32	STAK	Stack Overflow	Contact your supplier or replace the main PCBA.
33	COMM	Communication Error Count Limit	Communication errors in HART communication have exceeded the preset count limit. Check the connection status or verify whether the environment may be causing electrical noise, and take appropriate corrective actions.
34	FCLC	Full Close Count Limit Exceeded	The number of times the valve has fully closed has exceeded the preset limit.
35	FOPC	Full Open Count Limit Exceeded	The number of times the valve has fully opened has exceeded the preset limit.
36	LPCH	Loop Current High Alarm	The input signal has exceeded 20.5 mA.
37	LPCL	Loop Current Low Alarm	The input current has fallen below 3.8 mA.
38	DI1S	Discrete Input Status	Indicates that the discrete switch input port has been activated.
39	DO1S	Discrete Output Status	Indicates that discrete switch output port 1 has been activated.
40	DIGF	Diagnostics Failure	The valve diagnostic test could not be completed.
42	DO2S	Discrete Output Status	Indicates that discrete switch output port 2 has been activated.
46	LCSF	Loop Current Sensor Failure	There is a problem with the input current sensor. Contact the supplier or replace the main PCBA.
47	IPCF	I/P Converter Failure	There is a problem with the I/P converter. Contact your supplier or replace the I/P converter.
120	IPSF	I/P Converter Pressure Sensor Failure	There is a problem with the pressure sensor of the I/P converter. Contact your supplier.
121	AS1F	Output 1 Pressure Sensor Failure	There is a problem with the pressure sensor of the OUT 1 port. Contact your supplier.
122	AS2F	Output 2 Pressure Sensor Failure	There is a problem with the pressure sensor of the OUT 2 port. Contact your supplier

Alarm Code	Abbreviation	Status/Alarm Name	Description / Recommended Action
123	SPSF	Supply Pressure Sensor Failure	There is a problem with the pressure sensor of the Supply port. Contact your supplier
126	LEO1	Leakage in Output 1 line	There may be a pneumatic leak in the piping near the OUT 1 port. Inspect the piping.
127	LEO2	Leakage in Output 2 line	There may be a pneumatic leak in the piping near the OUT 2 port. Inspect the piping.
128	FRHA	Friction High Alarm	The current friction force has exceeded the configured Friction High Alarm Limit. Increase Friction High Alarm Limit or replace the valve if necessary.
129	FRHW	Friction High Warning	The current friction force has exceeded the configured Friction High Warning Limit. Increase Friction High Alarm Limit or replace the valve if necessary.
130	FRLW	Friction Low Warning	The current friction level has dropped below the configured Friction Low Warning Limit. Increase Friction Low Warning Limit or inspect the valve if necessary. Check whether the sensor measuring friction is functioning correctly
131	FRLA	Friction Low Alarm	The current friction level has dropped below the configured Friction Low Alarm Limit. Increase Friction Low Alarm Limit or inspect the valve if necessary. Check whether the sensor measuring friction is functioning correctly
132	BTOH	Break To Opening Pressure High Alarm	Current BTO (Break To Opening) pressure has exceeded the configured limit. Check whether the limit is properly set.
145	VARA	Device Variable Alert	An internal variable of the positioner is out of range.
144	MNTR	Maintenance Required	One or more alarms categorised as Maintenance Required have been triggered. Check the alarms and resolve the cause.
147	FAIL	Failure	One or more alarms categorised as Failure have been triggered. Check the alarms and resolve the cause.
148	OUTS	Out of Specification	One or more alarms categorised as Out of Specification Maintenance Required have been triggered. Check the alarms and resolve the cause.
149	FUNC	Function Check	One or more alarms categorised as Functional Check have been triggered. Check the alarms and resolve the cause.
-	OVER CUR	Over Current	Loop Input current has exceeded 24 mA.

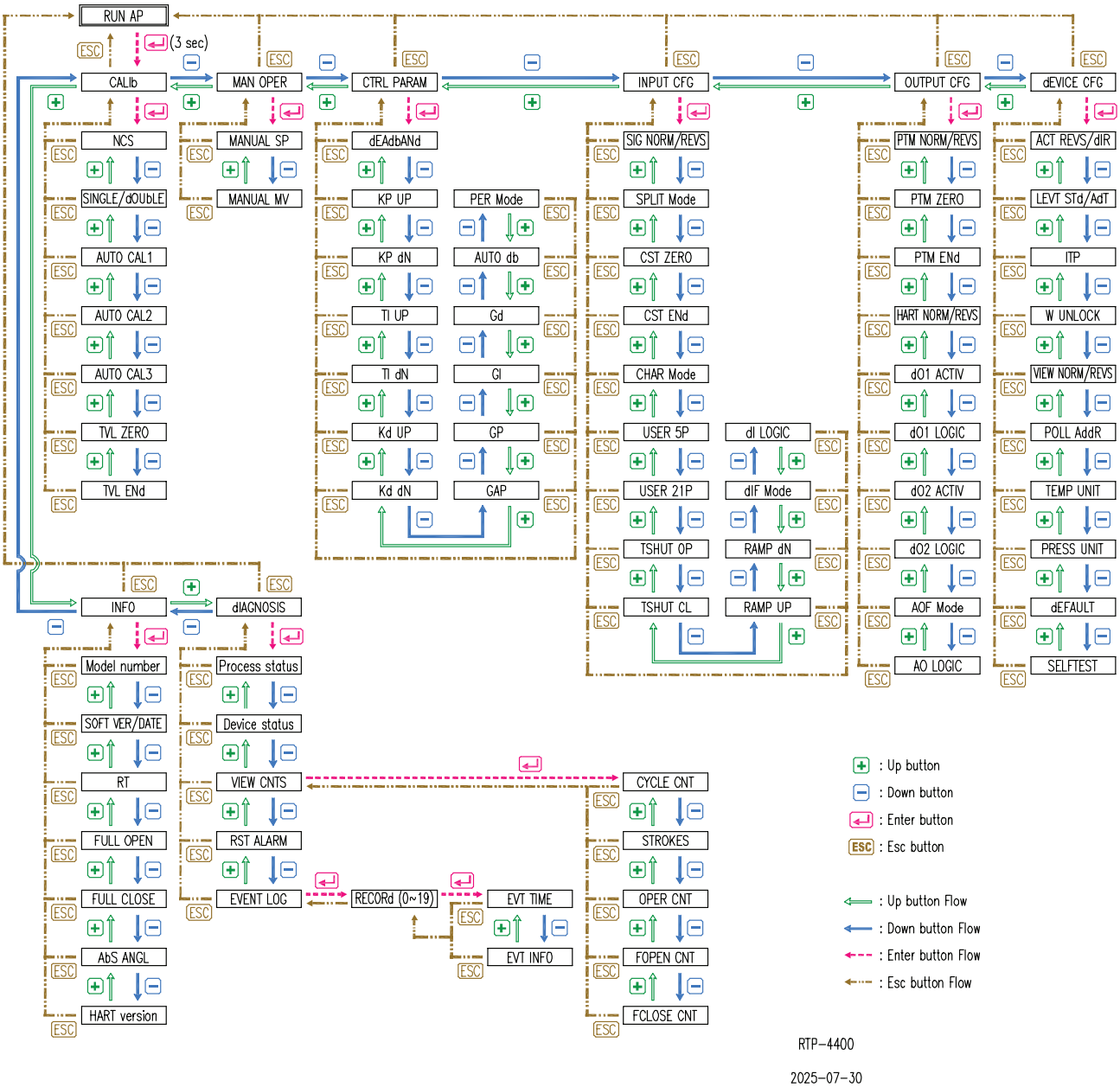
RUN AP
(3 sec)
CALIb
MAN OPER
CTRL PARAM
INPUT CFG
OUTPUT CFG
dEVICE CFG
NCS
SINGLE/dOUbLE
AUTO CAL1
AUTO CAL2
AUTO CAL3
TVL ZERO
TVL ENd
MANUAL SP
MANUAL MV
dEAdbANd
KP UP
KP dN
TI UP
TI dN
Kd UP
Kd dN
PER Mode
AUTO db
Gd
GI
GP
GAP
SIG NORM/REVS
SPLIT Mode
CST ZERO
CST ENd
CHAR Mode
USER 5P
USER 21P
TSHUT 0P
TSHUT CL
dI LOGIC
dIF Mode
RAMP dN
RAMP UP
PTM NORM/REVS
PTM ZERO
PTM ENd
HART NORM/REVS
dO1 ACTIV
dO1 LOGIC
dO2 ACTIV
dO2 LOGIC
AOF Mode
AO LOGIC
ACT REVS/dIR
LEVT STd/AdT
ITP
W UNLOCK
VIEW NORM/REVS
POLL AddR
TEMP UNIT
PRESS UNIT
dEFAULT
SELFTEST
INFO
dIAGNOSIS
Model number
SOFT VER/DATE
RT
FULL OPEN
FULL CLOSE
AbS ANGL
HART version
Process status
Device status
VIEW CNTS
RST ALARM
EVENT LOG
RECORd (0~19)
EVT TIME
EVT INFO
CYCLE CNT
STROKES
OPER CNT
FOPEN CNT
FCLOSE CNT
ESC
: Up button
: Down button
: Enter button
: Esc button
: Up button Flow
: Down button Flow
: Enter button Flow
: Esc button Flow
RTP-4400
2025-07-30

rotork®

Contact us now

mail@rotork.com
www.rotork.com

PUB125-289-00
Issue 09/26