

SMART Transmitter Power Supply
KFD2-STC5-Ex1.2O

- 1-channel isolated barrier
- 24 V DC supply (Power Rail)
- Input 2-wire and 3-wire SMART transmitters and 2-wire SMART current sources
- Signal splitter (1 input and 2 outputs)
- Dual output 4 mA ... 20 mA current sink/current source
- Terminals with test points
- Up to SIL 2 (SC 3) acc. to IEC/EN 61508

Function

This isolated barrier is used for intrinsic safety applications.
The device supplies 2-wire and 3-wire SMART transmitters, and can also be used with 2-wire SMART current sources.
It transfers the analog input signal to the safe area as two isolated output signals.
Digital signals may be superimposed on the input signal in the hazardous or non-hazardous area and are transferred bi-directionally.
The device provides a sink mode or a source mode output on the safe area terminals.
The device has an internal resistor. Use this resistor if the HART communication resistance in the control circuit is too low.
Test sockets for the connection of HART communicators are integrated into the terminals of the device.

Application

The device supports the following SMART protocols:

- HART
- BRAIN
- Foxboro

Wiring Diagram

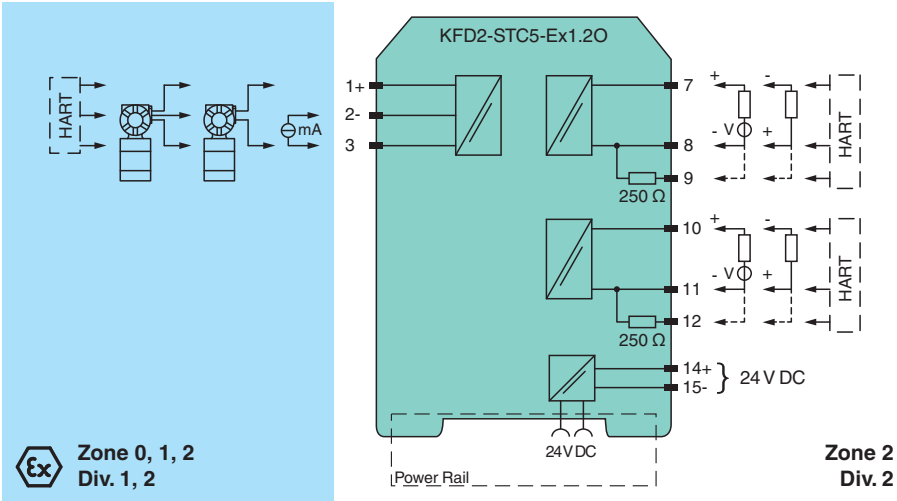

Short circuit unused outputs decreases the internal power dissipation by up to 100 mW per channel.

Technical Data

General specifications	
Signal type	Analog input
Functional safety related parameters	
Safety Integrity Level (SIL)	SIL 3

Release date: 2026-07-22 Date of issue: 2026-07-22 Filename: 239214_eng.pdf

Technical Data

Systematic capability (SC)		SC 3
Supply		
Connection		Power Rail or terminals 14+, 15-
Rated voltage	U_r	18 ... 30 V DC
Ripple		within the supply tolerance
Power dissipation		≤ 1 W at maximum load
Power consumption		≤ 1.7 W at maximum load
Input		
Connection side		field side
Connection		terminals 1+, 2-, 3
Input signal		4 ... 20 mA
Open circuit voltage/short-circuit current		terminals 1+, 3: 23 V / 25 mA
Input resistance		max. 265 Ω terminals 2-, 3 , max. 330 Ω terminals 1+, 3
Available voltage		≥ 16 V at 20 mA ; ≥ 20 V at 4 mA , terminals 1+, 3
Output		
Connection side		control side
Connection		terminals 7+, 8-, 9-; 10+, 11-, 12- (sink) terminals 7-, 8+, 9+; 10-, 11+, 12+ (source) see additional information
Load		0 ... 600 Ω
Output signal		4 ... 20 mA (overload > 25 mA)
Ripple		max. 50 µA $_{rms}$
External supply (loop)		2 ... 30 V DC If the external voltage is > 19 V, a load ≥ ((V - 19) / 0.02) Ω is required. V represents the value of the external voltage. The internal 250 Ω resistor at terminals 9 and 12 can be used as a load.
Transfer characteristics		
Deviation		at 20 °C (68 °F), 4 ... 20 mA ≤ 10 µA incl. calibration, linearity, hysteresis, loads and fluctuations of supply voltage
Influence of ambient temperature		≤ 0.25 µA/K
Frequency range		field side into the control side: bandwidth with 0.5 V_{pp} signal 0 ... 7.5 kHz (-3 dB) control side into the field side: bandwidth with 0.5 V_{pp} signal 0.3 ... 7.5 kHz (-3 dB)
Settling time		500 µs
Rise time/fall time		100 µs
Galvanic isolation		
Output/power supply		functional insulation, rated insulation voltage 50 V AC
Output/Output		functional insulation, rated insulation voltage 50 V AC
Indicators/settings		
Display elements		LED
Labeling		space for labeling at the front
Directive conformity		
Electromagnetic compatibility		
Directive 2014/30/EU		EN 61326-1:2013 (industrial locations)
Conformity		
Electromagnetic compatibility		NE 21:2012 EN 61326-3-2:2008
Degree of protection		IEC 60529:2001
Protection against electrical shock		UL 61010-1:2012
Ambient conditions		
Ambient temperature		-20 ... 60 °C (-4 ... 140 °F) extended ambient temperature range up to 70 °C (158 °F), refer to manual for necessary mounting conditions
Mechanical specifications		
Degree of protection		IP20
Connection		screw terminals
Mass		approx. 200 g
Dimensions		20 x 124 x 115 mm (0.8 x 4.9 x 4.5 inch) (W x H x D) , housing type B2

Release date: 2026-07-22 Date of issue: 2026-07-22 Filename: 239214_eng.pdf

Technical Data

Mounting		on 35 mm DIN mounting rail acc. to EN 60715:2001
Data for application in connection with hazardous areas		
EU-type examination certificate		CML 17 ATEX 2031X
Marking		⟨Ex⟩ II (1)G [Ex ia Ga] IIC ⟨Ex⟩ II (1)D [Ex ia Da] IIIC ⟨Ex⟩ I (M1) [Ex ia Ma] I
Input		[Ex ia Ga] IIC, [Ex ia Da] IIIC, [Ex ia Ma] I
Supply		
Maximum safe voltage	U_m	250 V (Attention! The rated voltage can be lower.)
Equipment		terminals 1+, 3-
Voltage	U_o	26.2 V
Voltage	U_q	27.25 V
Current	I_o	93 mA
Power	P_o	634 mW
Equipment		terminals 2-, 3
Voltage	U_i	30 V
Current	I_i	115 mA
Power	P_i	max 1 W
Voltage	U_o	2 V
Current	I_o	8.5 mA
Power	P_o	4.3 mW
Equipment		terminals 1+, 2 / 3-
Voltage	U_o	26.2 V
Voltage	U_q	27.25 V
Current	I_o	115 mA
Power	P_o	784 mW
Certificate		CML 17 ATEX 3030X
Marking		⟨Ex⟩ II 3G Ex ec IIC T4 Gc
Galvanic isolation		
Input/Output		safe electrical isolation acc. to IEC/EN 60079-11:2007, voltage peak value 375 V
Input/power supply		safe electrical isolation acc. to IEC/EN 60079-11:2007, voltage peak value 375 V
Directive conformity		
Directive 2014/34/EU		EN IEC 60079-0:2018+AC:2020 , EN 60079-7:2015+A1:2018 , EN IEC 60079-11:2024
International approvals		
UL approval		E106378
Control drawing		116-0439 (cULus)
IECEx approval		
IECEx certificate		IECEx CML 17.0016X
IECEx marking		[Ex ia Ga] IIC , [Ex ia Da] IIIC , [Ex ia Ma] I Ex ec IIC T4 Gc
General information		
Supplementary information		Observe the certificates, declarations of conformity, instruction manuals, and manuals where applicable. For information see www.pepperl-fuchs.com.

Release date: 2026-07-22 Date of issue: 2026-07-22 Filename: 239214_eng.pdf

Assembly

Front view

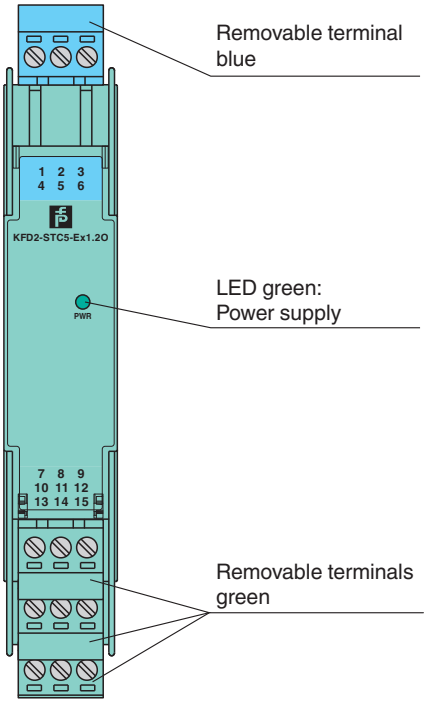

Connection

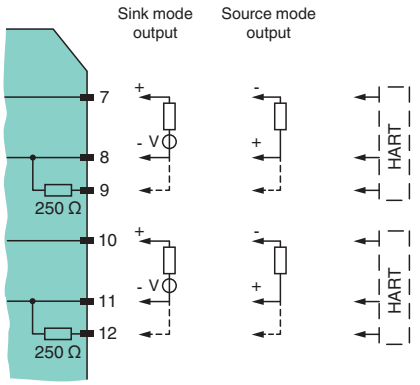

The device provides 2 outputs on the control side terminals. These outputs can be operated in any combination of the current sink operating mode and current source operating mode. Please refer to the connection diagram.

Release date: 2026-07-22 Date of issue: 2026-07-22 Filename: 239214_eng.pdf