MAGNETROL® / AMETEK®
LEVEL MEASUREMENT SOLUTIONS

Echotel® Model 910 Ultrasonic Level Switch

DESCRIPTION

Echotel® Model 910 Level Switches utilize ultrasonic contact technology for measuring level in clean liquid applications. The dual conduit electronics houses an 8-amp DPDT gold flash relay that is field selectable for high or low level fail-safe applications. There are no moving parts that come in contact with the medium. The Echotel Model 910 is an integrally mounted system, comprised of surface mount electronics and a 316 stainless steel transducer. Hazardous area location approvals are available from FM, CSA, and ATEX.



FEATURES

- Single rod design eliminates clogging
- Measures level within 0.25” (6 mm) from the end of the tip-sensitive transducer gap
- 8-amp DPDT gold flash or 5-amp DPDT hermetically sealed relay
- Surface mount conformal coated electronics
- FM, CSA, and ATEX approved for hazardous locations
- Variety of mounting options including NPT and BSP threaded, flanges and hygienic connections
- No calibration required
- 316 stainless steel transducer
- Mounted horizontally or vertically
- Compact dual conduit cast aluminum electronics housing

APPLICATIONS

- Seal Pot Level
- Low Level Alarm
- High Level Alarm
- OEM/Skid Packages
- Pump Protection

TECHNOLOGY

The Model 910 Level Switch uses ultrasonic energy to detect the presence or absence of liquid in a 316 stainless steel tip sensitive transducer gap. The basic principle behind ultrasonic contact technology is that high-frequency sound waves are easily transmitted across a transducer gap in the presence of a liquid medium, but are severely attenuated when the gap is dry. The Model 910 uses an ultrasonic frequency of 3 MHz to perform this liquid level measurement in a wide variety of process media and application conditions.

The transducer uses a pair of piezoelectric crystals that are encapsulated in epoxy at the tip of the transducer. The crystals are made of a ceramic material, such as lead zirconate. The transmit crystal converts an electrical signal from the Model 910 electronics into an ultrasonic signal. When liquid is present in the gap, the receive crystal is able to sense the ultrasonic signal from the transmit crystal and convert it back to an electrical signal. This signal is sent to the electronics to indicate the presence of liquid in the transducer gap. When there is no liquid present, the ultrasonic signal is attenuated, and the receive crystal is not able to sense the sound waves from the transmit crystal.

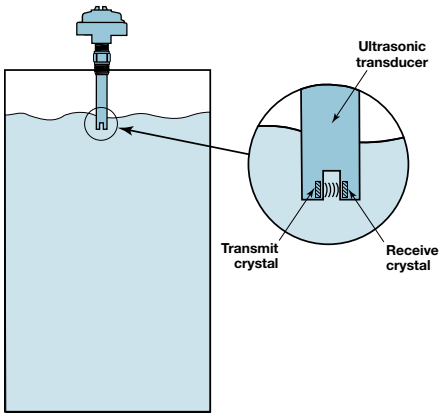

Ultrasonic signal transmission across transducer gap

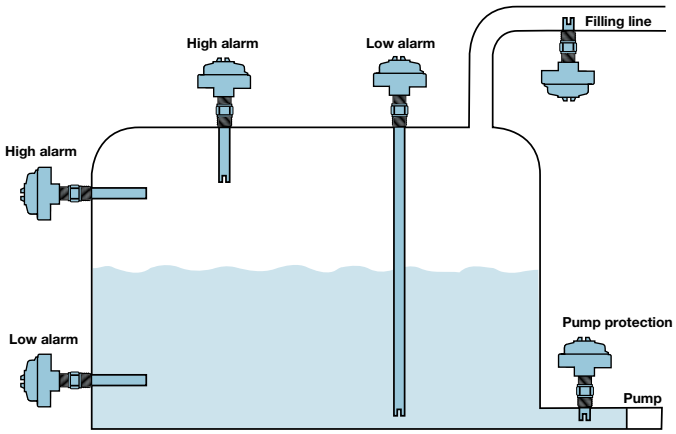

Typical applications and mounting positions

SPECIFICATIONS

Power Supply		120 VAC (+10%/-15%), 50/60 Hz 240 VAC (+10%/-15%), 50/60 Hz 24 VDC (±10%)
Power consumption		2.5 VA nominal
Relay Output	Gold flash DPDT	8 amps @ 120 VAC, 8 amps @ 240 VAC 8 amps @ 24 VDC, 0.5 amps @ 125 VDC
	Hermetically sealed DPDT	5 amps @ 120 VAC, 5 amps @ 240 VAC 5 amps @ 24 VDC
Repeatability		0.078” (2 mm)
Fail-safe		Field selectable high or low
Calibration		None required
Ambient Temperature		Electronics: -40 to +158 °F (-40 to +70 °C)
Process Temperature		Transducer: -40 to +250 °F (-40 to +121 °C)
Shock		ANSI/ISA-S71.03 Class SA1
Vibration		ANSI/ISA-S71.03 Class VC2
Operating Pressure		800 psig (55 bar)
Mechanical Design Pressure		1500 psig (103 bar)

MODEL NUMBER

4 | HOUSING

A	Aluminum sand cast with ¾" NPT dual conduit, FM/FMc approvals
P	Aluminum sand cast with ¾" NPT dual conduit, FM/FMc/ATEX/IECEx approvals
W	Aluminum sand cast with M20 dual conduit, FM/FMc/ATEX/IECEx approvals

5 | TRANSDUCER UNIT OF LENGTH

1	English (actuation length in inches) – CRN Available
M	Metric (actuation length in centimeters)

6 | PROCESS CONNECTION

A	¾" NPT
2	1" NPT
9	1" BSP
1	1" 150 lb. ASME raised face flange
C	1½" 150 lb. ASME raised face flange
D	2" 150 lb. ASME raised face flange
E	1" 300 lb. ASME raised face flange
F	1½" 300 lb. ASME raised face flange
G	2" 300 lb. ASME raised face flange

7 | INPUT POWER

0	120 VAC with 8-amp DPDT gold flash relay
1	240 VAC with 8-amp DPDT gold flash relay
2	24 VDC with 8-amp DPDT gold flash relay
H	120 VAC with 5-amp DPDT hermetically sealed relay
J	240 VAC with 5-amp DPDT hermetically sealed relay
K	24 VDC with 5 amp DPDT hermetically sealed relay

8 9 10 | ACTUATION LENGTH

1" to 96" in 1" increments (with Transducer Unit of Length code 1) Example: 4 inches = 004 ① ③
3 cm to 244 cm in 1 cm increments (with Transducer Unit of Length code M) Example: 6 centimeters = 006 ② ③

9	1	0	–					–			
1	2	3		4	5	6	7		8	9	10

① 1" (code 001) minimum with NPT process connections, 2" (code 002) minimum with hygienic or ASME flanged process connections.

② 3 cm (code 003) minimum with NPT process connections, 5 cm (code 005) minimum with 1" BSP, or hygienic or ASME flanged process connections.

③ Consult factory for longer lengths.

DIMENSIONAL SPECIFICATIONS INCHES (mm)

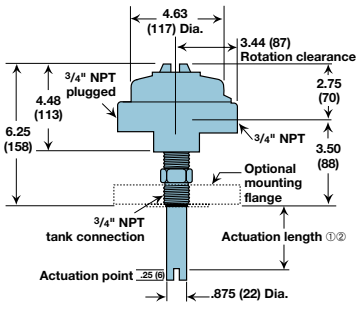

NEMA 4X/7/9, aluminum housing ¾" NPT dual conduits

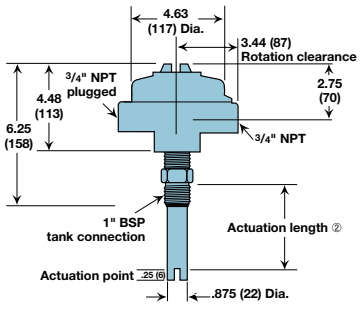

NEMA 4X/7/9, aluminum housing ¾" NPT dual conduit (w/1" BSP process conn.)

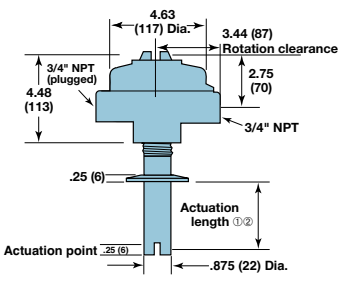

NEMA 4X/7/9, aluminum housing ¾" NPT dual conduit (with hygienic flange)

AGENCY APPROVALS

Explosion Proof / Dust Ignition Proof **US/Canada: FM19US0170X/FM20CA0034X** Class I, Div 1, Groups B, C, D T6 Class II, III, Div. 1 Groups E, F, G T6 SINGLE SEAL Type 4X US: Class I, Zone 1 AEx db IIC T6 Gb Canada: Ex db IIC T6 Gb SINGLE SEAL -40ºC ≤ Ta ≤+70ºC Probes > 60 inches Ta = -20°C ≤ Ta ≤ 70°C IP66 **Flame Proof** **ATEX – FM20ATEX0005X** Integral: II 2 G Ex db IIC T6 Gb -40ºC ≤ Ta ≤+70ºC Probes > 60 inches Ta = -20°C ≤ Ta ≤ 70°C IP66 **IEC IECEx FMG20.0004X** Ex db IIC T6 Gb -40ºC ≤ Ta ≤+70ºC Probes > 60 inches Ta = -20°C ≤ Ta ≤ 70°C IP66	**Non-Incendive** **US/Canada** US: Class I Div. 2, Groups A, B, C D T5 Class II, III, Div. 2 Groups F and G T5 SINGLE SEAL -40ºC ≤ Ta ≤+70ºC Probes > 60 inches Ta = -20°C ≤ Ta ≤ 70°C IP66 ***AVERTISSEMENT!*** Danger d'explosion éventuel. Ne brancher ou débrancher des équipements que si l'alimentation électrique a été coupée ou si la zone est réputée non dangereuse.

These units are in compliance with the EMC-directive 2014/30/EU, the PED-directive 2014/68/EU and the ATEX directive 2014/34/EU.

WARRANTY

All AMETEK LMS electronic level and flow controls are warranted free of defects in materials or workmanship for eighteen months from the date of original factory shipment.

If returned within the warranty period; and, upon factory inspection of the control, the cause of the claim is determined to be covered under the warranty; then, AMETEK LMS will repair or replace the control at no cost to the purchaser (or owner) other than transportation.

AMETEK LMS shall not be liable for misapplication, labor claims, direct or consequential damage or expense arising from the installation or use of equipment. There are no other warranties expressed or implied, except special written warranties covering some AMETEK LMS products.

For additional information, see Instruction Manual 51-604.

MAGNETROL® / AMETEK® LEVEL MEASUREMENT SOLUTIONS

ametek-measurement.com

705 Enterprise Street • Aurora, Illinois 60504-8149 USA
630.969.4000 • info.magnetrol@ametek.com

Copyright © 2024 AMETEK Magnetrol USA, LLC
Performance specifications are effective with date of issue and are subject to change without notice.

BULLETIN: 51-105.23
EFFECTIVE: January 2022
SUPERSEDES: August 2021