MAGNETROL® / AMETEK®
LEVEL MEASUREMENT SOLUTIONS

Echotel® Model 355 Non-Contact Ultrasonic Two-Wire Transmitter for Level, Volume, or Open Channel Flow

DESCRIPTION

Echotel® Model 355 is a two-wire, loop-powered, non-contact ultrasonic transmitter that performs liquid level, volume, and open channel flow measurement. Model 355 transmitters feature a powerful 60 kHz ultrasonic transducer and advanced digital signal processing to reliably measure out to a 20 feet (6 m) maximum range.

The Model 355 provides unsurpassed ease of configuration with either the menu-driven 4-push-button, 2-line × 16-character display, HART® digital communications, or PACTware™. This enables a complete configuration to be performed via the local user interface, or remotely with the extra capability of capturing echo wave forms, and viewing trend data, diagnostic conditions, and all transmitter configuration parameters.

The integral mount electronics are housed in either a cast aluminum housing or Lexan® thermoplastic housing. The intelligent electronics analyze the ultrasonic echo profile, apply temperature compensation, reject echoes from false targets, and then processes the true echo from the liquid surface. This results in an extremely reliable measurement even when applications difficulties like turbulence, rapid level changes, or echoes from false targets exist.

The 60 kHz ultrasonic transducer is offered in polypropylene, or Kynar® Flex for superior performance in harsh environments. These powerful transducers feature a 10° conical beam and 10” (250 mm) blocking distance to maximize measurement capabilities in a wide variety of applications.

APPLICATIONS

- Chemical storage tanks
- Pond or river level monitoring
- Paint, ink and solvent tanks
- Industrial wastewater processing
- Volume in batch and day tanks
- Open channel flow weirs and flumes



Cast aluminum housing with Kynar Flex® transducer



Lexan® housing with polypropylene transducer

FEATURES

- Two-wire, loop-powered transmitter for level, volume and open channel flow measurement
- Maximum range of 20 feet (6 meters)
- PACTware PC program using HART Communications for remote configuration and troubleshooting
- Menu-driven 4-push-button, 2-line × 16-character LCD user interface
- Patent-pending temperature compensated echo rejection technique identifies true echo from surface
- Two 7-digit flow totalizers, one resettable, and one non-resettable
- Common tank shapes and 20-point custom table for fast and accurate volume configuration
- 60 kHz transducer with 10° beam angle and 10" (250 mm) blocking distance
- Dynamic baseline noise compensation provides reliable performance in the presence of electromagnetic noise
- Generic Discharge Flow Equation and 35 flume/weir primary elements for open channel flow applications

TECHNOLOGY

Non-contact ultrasonic measurement is obtained by emitting an ultrasonic pulse from the transducer and measuring the time required for the echo to reflect from the liquid surface and return to the transducer. The Model 355 measures the time of the round trip pulse, and calculates the distance using the equation:

$$D = \frac{V_a T}{2}$$

D = Distance to target

V_a = Velocity of sound through air (1,128 ft/sec.)

T = Time for one round trip sound pulse

Since the speed of sound is temperature dependent, the transducer also measures the temperature at the transducer to provide compensation for changing air temperatures. Level is computed by the 355 electronics using the measured distance and the configuration data that has been entered for the vessel dimensions.

By inputting the tank shape and 1–3 dimensions, the electronics can calculate the liquid volume in the vessel. In a similar operation, the Model 355 can perform open channel flow measurement by converting the level reading into units of volume per time. Common tank shapes, flumes and weirs are stored in the 355 software. A 20-point custom table is also available for unusual tanks or primary flow elements.

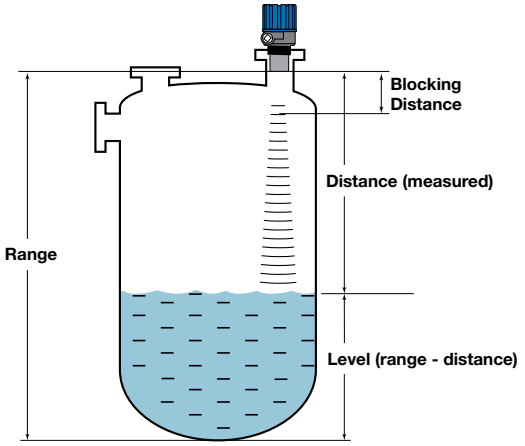

Level/Volume Application

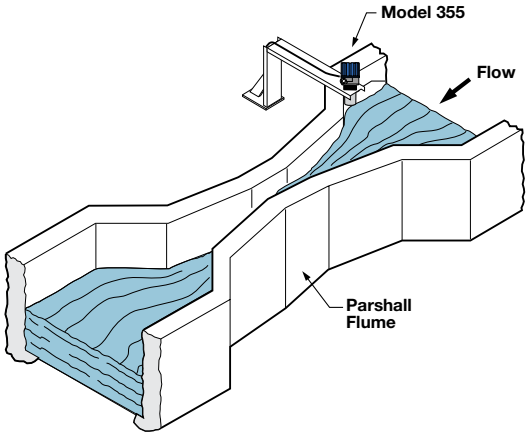

Open Channel Flow Application

PERFORMANCE

Model 355 Transmitters are high performance units that feature a powerful 60 kHz transducer, and advanced digital signal processing. These features allow the 355 to accurately track the liquid level in difficult applications like turbulence, rapid level changes or when echoes from false targets exist. The narrow 10° beam angle, shown on the right, allows the 355 to be used in applications where other units with wider beam angles fail due to false reflections from obstructions in the tank.

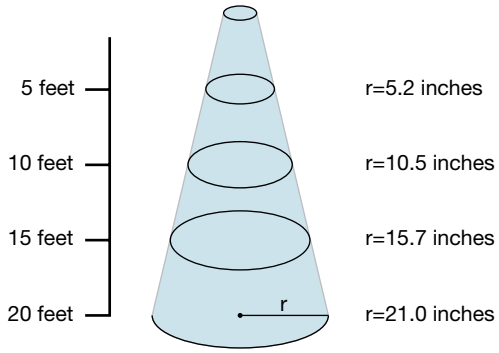

Beam Radius (r) vs. Distance

MEASUREMENT RANGE CALCULATIONS

Ultrasonic non-contact transmitters are typically rated for a maximum range in ideal conditions. Experience has shown that the maximum range must be reduced for certain factors. Although the maximum range rating is somewhat conservative, each application must be evaluated for specific conditions in the tank.

Several application parameters that affect ultrasonic performance are shown in the tank at the right. Each of these parameters is assigned a Performance Multiplier in the chart below. Multiply the maximum potential range (20 feet) of the Model 355 by each of the applicable Performance Multipliers to calculate the maximum allowable range for the application.

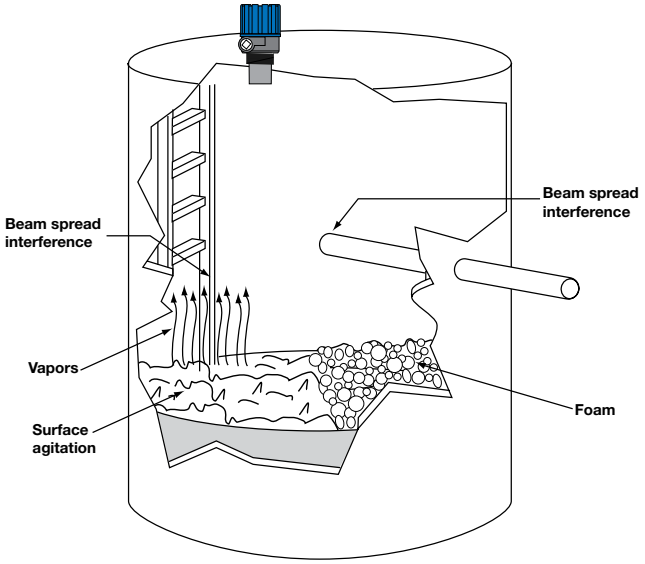

OPERATING PARAMETER	CONDITION	PERFORMANCE MULTIPLIER
Surface agitation: Surface agitation or waves can degrade the performance. Moderate agitation results in only slight degradation of performance. The worst case is when the surface is a good reflector, but in the wrong direction.	Smooth, glass-like surface	1.0
	Slight agitation, choppiness	0.9
	Heavy agitation	0.8
	Slight vortex	0.7
Vapors and steam: Vapors can cause problems when the liquid process temperature is well above the temperature of the airspace. The greater the difference, the more expected vapor problems. The problems result from condensation or layering in the sound path, both of which attenuate the sound signal, and degrade performance. If a vent is used, be sure that it is well away from the transducer.	No condensation	1.0
	Little condensation	0.9
	Much condensation/foggy appearance	0.8
Beam spread interference: It is recommended that no obstructions, such as ladder rungs, fill pipes, support struts, etc., be allowed within the 10° ultrasonic beam diameter. If an obstruction is unavoidable, make it as far away as possible from the transducer. Interference from agitator blades is only an intermittent interference that usually has little effect on performance. A special software algorithm can also help suppress false echoes from agitator blades that are within the beam angle.	No interference within 5° half beam angle	1.0
	Agitator at speed less than 60 RPM	1.0
	Agitator at speed greater than 60 RPM	Consult factory
	Interference outside 2°, far from transducer (in bottom third of range)	0.8
	Interference outside 2°, near to transducer (in top third of range)	0.5
Foam: Foam can attenuate the ultrasound and render the system inoperative. If possible, moving the transducer to an area in the tank where there is less foam will improve the performance. Thick, heavy-density foams can sometimes produce a reflection from the top of the foam. The multipliers shown at right are general guidelines. For further assistance consult the factory.	No foam	1.0
	Light froth, less than 0.25” thick	0.8
	Light foam, less than 0.5” thick	0.5
	Light foam, more than 1” thick	0.1
EXAMPLE: A slightly agitated 12-foot tank with no condensation, no interference, and a light froth on the surface. Maximum allowable range: 20' × 0.9 × 1.0 × 1.0 × 0.8 = 14.4 feet Since the maximum allowable range is 14.4 feet, the 355 is suitable for this 12-foot tank.		

NOTE: The multipliers shown above are general guidelines. Consult the factory for further assistance.

LEVEL & VOLUME APPLICATIONS

The Echotel Model 355 Transmitter utilizes an advanced, patent-pending signal processing technology to provide excellent performance in difficult process conditions. Dynamic baseline noise compensation, temperature compensated echo rejection, and extensive self-diagnostics all combine to provide extremely reliable level and volume measurement.

TEMPERATURE COMPENSATED ECHO REJECTION

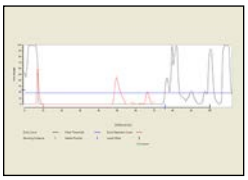

Ultrasonic transmitters use temperature compensation to adjust for speed-of-sound changes throughout the operating temperature range of the transducer; however, most transmitters do not apply this compensation to their false target rejection scheme. This can result in unreliable level measurement when the temperature inside the tank changes, and the echo rejection profile contracts or expands. The Model 355 has a patent-pending echo rejection technique that constantly adjusts the rejected echo profile based on the current sound propagation velocity. This technique keeps the transmitter tracking the actual liquid level as opposed to false targets even when temperature changes alter the shape of the echo rejection profile.



DYNAMIC BASELINE NOISE COMPENSATION



Electromagnetic and acoustical noise can adversely affect instrumentation by decreasing the signal-to-noise ratio, and degrading overall measurement performance. The Model 355 continuously monitors for the presence of excessive electrical noise. If noise levels are above a set limit, the electronics will dynamically adjust the baseline to compensate for the electrical interference. This dynamic baseline adjustment enables the 355 to keep tracking the proper echo even in the presence of excessive electrical noise.

STORED TANK SHAPES FOR VOLUME

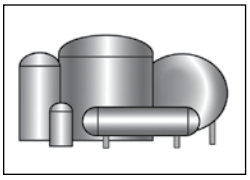

Volume configuration with the 355 is as easy as selecting the tank shape and inputting 1–3 dimensions. While a 20-point custom table is also available, selecting the actual tank shape provides for a fast and accurate configuration for a variety of common tanks shapes.

OPEN CHANNEL FLOW APPLICATIONS

EXTENSIVE SELECTION OF PRIMARY FLOW ELEMENTS

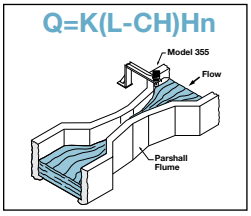

With a total of 35 flume and weir curves stored in the electronics, it would be hard to find an open channel flow application that cannot be handled by the 355 transmitter. Unusual flow applications can readily be accomplished through the use of either the 20-point Custom Table or the Generic Discharge Flow Equation which allows a direct entry of unique flow equations.



DUAL FLOW TOTALIZERS



Two 7-digit flow totalizers are provided for recording flow in cubic feet, gallons, million gallons, liters, million liters, or cubic meters. One totalizer is resettable and the other is non-resettable. Several multipliers are selectable to allow for proper scaling. Totalizer time is also recorded to show how long each totalizer has been recording flow.

MODEL 355 SPECIFICATIONS

ELECTRONICS

Supply Voltage	XP & GP:	6 to 30 VDC
	IS:	16 to 28.4 VDC
Power Consumption		Less than 1 Watt
Output	Type:	4–20 mA with optional HART digital signal
	Range:	3.8 to 20.5 mA useable (NAMUR NE 43)
	Diagnostic Alarm:	Selectable from 3.6 mA, 22 mA or HOLD
	Damping:	Adjustable from 1–60
	Loop Resistance:	400 Ω @ 24 VDC/20 mA, 350 Ω @ 24 VDC/22 mA
Digital Communication		HART version 5.x compatible
Display		2-line × 16-character LCD
Keypad		4-push-button menu-driven
Ambient Temperature		-40 to +175 °F (-40 to +80 °C)
Humidity		0–99%, non-condensing
Electromagnetic Compatibility		Meets CE Requirements: EN 50081-2, EN 50082-2
Surge Protection		Meets CE Requirements: EN 61326-1 (1,000 volts)
Shock		ISA-DS71.03, Paragraph 5.1.1, Table 2, Level SA1
Vibration		ISA DS71.03, Paragraph 5.1.2, Table 1, Condition VC2
Housing Material		Cast aluminum or Lexan
Cable Entry		Two ¾" NPT or M20 entries
Net Weight	Aluminum Housing:	3.2 lbs (1.5 kg)
	Lexan® Housing:	1.6 lbs. (0.7 kg)

TRANSDUCER

Maximum Range	20 feet (6 meters)
Minimum Range	13 inches (330 mm)
Blocking Distance	10 inches (250 mm)
Minimum Measurement	3 inches (76 mm)
Frequency	60 kHz
Process Connection	2" NPT
Process Temperature	-40 to +175 °F (-40 to +80 °C)
Process Pressure	0 to 43.5 psig (0 to 3 bar)
Material	Kynar® Flex (PVDF) or polypropylene
Beam Angle	10° conical

PERFORMANCE

Accuracy	Greater of ± 0.2% of range or 0.24 inch (6 mm)
Repeatability	± 0.125 inch (± 3 mm)
Resolution	0.1 inch (2.5 mm)
Linearity	± 0.4 inch (± 10 mm)
Response Time	Less than 1 second (typical)
Warm-up Time	25 seconds

Performance is based on a reference operating condition of an ambient temperature of +60 to +77 °F (+15 to +25 °C), 45 to 75% relative humidity, transducer vertically aligned over an ideal reflecting surface, and no false targets within the ultrasonic beam angle.

DIMENSIONAL SPECIFICATIONS

INCHES (MM)

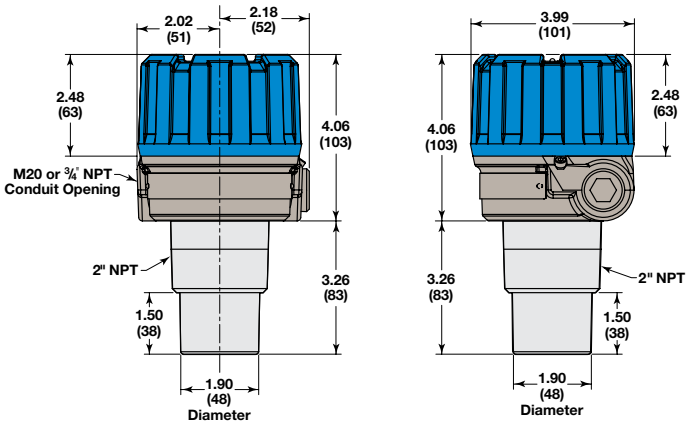

Cast Aluminum Housing with Kynar® or Polypropylene Transducer

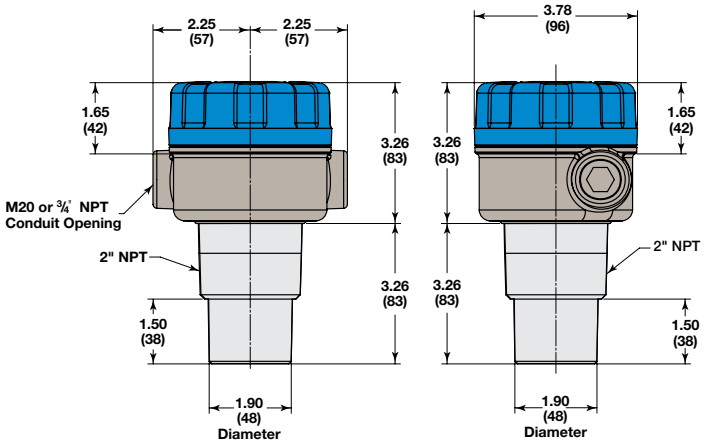

Lexan® Housing with Kynar or Polypropylene Transducer

AGENCY APPROVALS

AGENCY	APPROVED MODELS	PROTECTION METHOD	AREA CLASSIFICATION
FM	355-510A-11X 355-510A-10X	Intrinsically Safe	FM20US0110X/FM20CA0052X Class I, Div. 1; Groups A, B, C, & D Type 4X, IP66, T4 -40°C ≤ Ta ≤ +70°C ①
	355-510A-16X	Intrinsically Safe	FM20US0110X/FM20CA0052X Class I, Div. 1; Groups A, B, C, & D IP67, T4 -40°C ≤ Ta ≤ +70°C ①
	355-510A-1XX	Non-Incendive	FM20US0110X/FM20CA0052X Class I, Div. 2; Groups A, B, C, & D IP66/IP67, T4 ② -40°C ≤ Ta ≤ +70°C ①
ATEX/IECEx	355-510A-C0R 355-510A-C1R 355-510A-AXX	Flameproof/ Encapsulation Intrinsically Safe	FM20ATEX0028X/IECEx FMG 20.0030X II 1/2 G Ex db / ma IIC T4 Ga/Gb; IP66 Ex db / ma IIC T4 Ga/Gb; IP66 -40°C ≤ Ta ≤ +70°C II 1 G Ex ia IIC T4 Ga; IP67 Ex ia IIC T4 Ga -40°C ≤ Ta ≤ +70°C
Consult factory for country-specific approvals			

① Process temperature must not increase the internal temperature of the electronics above 176 °F (80 °C).

② Metal enclosure is IP66 and Lexan enclosure is IP67.

CE These units have been tested to EN 61326 and are in compliance with the EMC Directive 2004/108/EC.

MODEL NUMBER

1 2 3 | BASIC MODEL NUMBER

3 5 5	Ultrasonic transmitter for level, volume and open channel flow

4 | INPUT POWER

5	24 VDC two-wire loop-powered

5 | OUTPUT SIGNAL

1	4–20 mA with HART®

8 | AGENCY APPROVAL

1	cFMus Intrinsically Safe and Non-Incendive
A	ATEX/IECEx Intrinsically Safe
C	ATEX/IECEx Flameproof ①

① Available only with Housing codes 0 or 1 and Transducer code R

9 | HOUSING/CONDUIT CONNECTION

0	Cast aluminum with ¾" NPT conduit connections
1	Cast aluminum with M20 conduit connections
6	Lexan® plastic with ¾" NPT conduit connections

10 | TRANSDUCER

B	2" NPT polypropylene
R	2" NPT Kynar® Flex

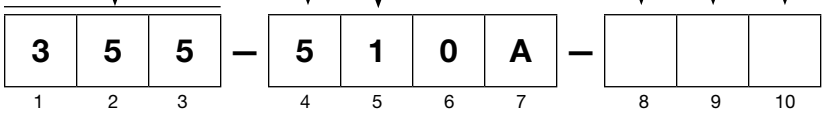

QUALITY

The quality assurance system in place at AMETEK LMS guarantees the highest level of quality throughout the company. AMETEK LMS is committed to providing full customer satisfaction both in quality products and quality service.

The AMETEK LMS quality assurance system is registered to ISO 9001 affirming its commitment to known international quality standards providing the strongest assurance of product/service quality available.

WARRANTY



All AMETEK LMS electronic level and flow controls are warranted free of defects in materials or workmanship for eighteen months from the date of original factory shipment.

If returned within the warranty period; and, upon factory inspection of the control, the cause of the claim is determined to be covered under the warranty; then, AMETEK LMS will repair or replace the control at no cost to the purchaser (or owner) other than transportation.

AMETEK LMS shall not be liable for misapplication, labor claims, direct or consequential damage or expense arising from the installation or use of equipment. There are no other warranties expressed or implied, except special written warranties covering some AMETEK LMS products.

For additional information, see Instruction Manual 51-661.

MAGNETROL® / AMETEK®
LEVEL MEASUREMENT SOLUTIONS

ametek-measurement.com

705 Enterprise Street • Aurora, Illinois 60504-8149 USA
630.969.4000 • info.magnetrol@ametek.com

Copyright © 2024 AMETEK Magnetrol USA, LLC
Performance specifications are effective with date of issue and are subject to change without notice.

BULLETIN: 51-161.4
EFFECTIVE: August 2021
SUPERCEDES: May 2019